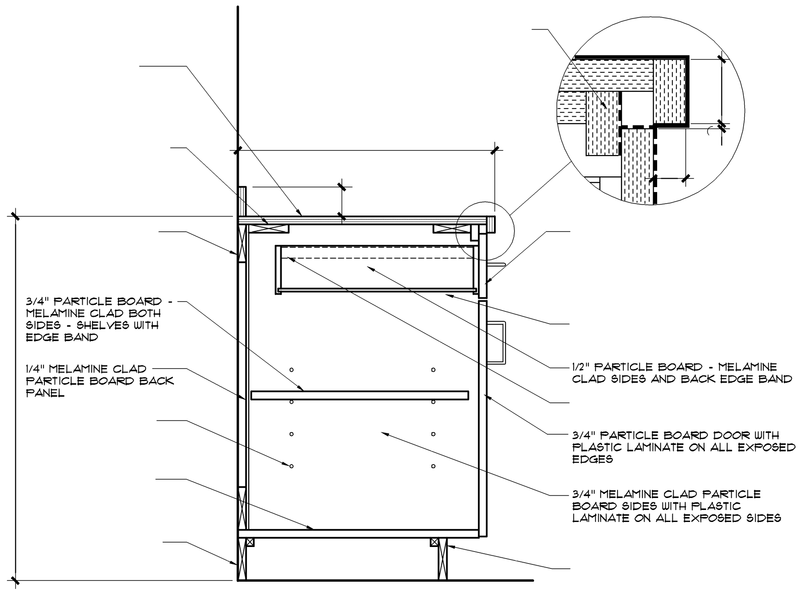

Millwork Section Detail

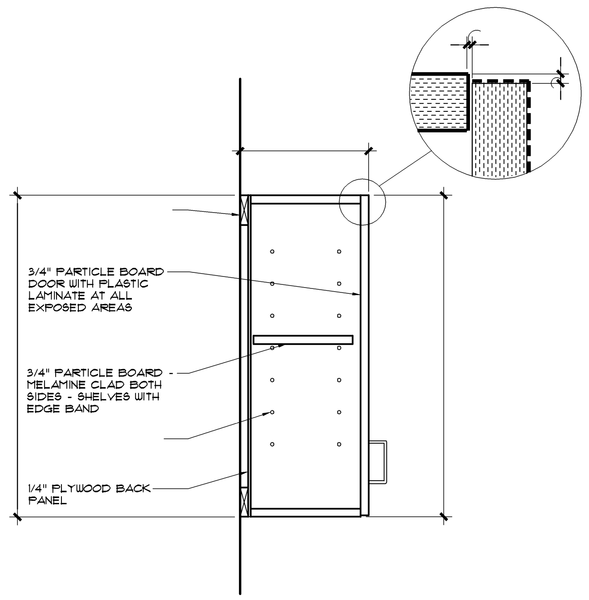

Millwork Section Detail

Not Used

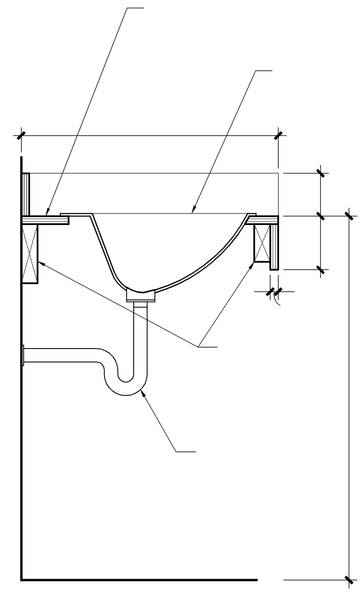

Section Detail

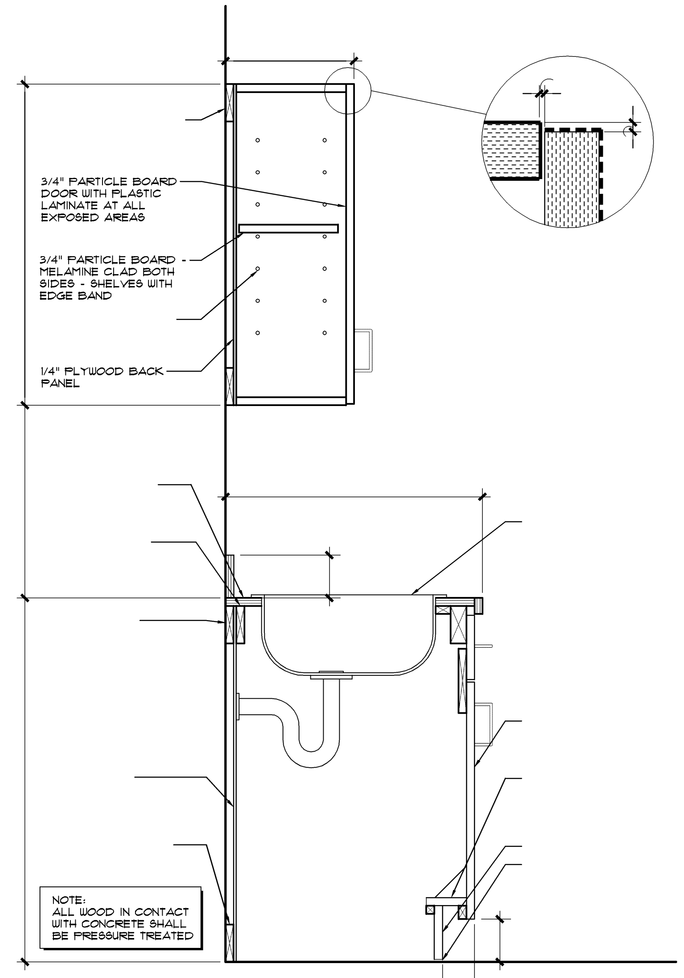

ADA Accessible Sink Access

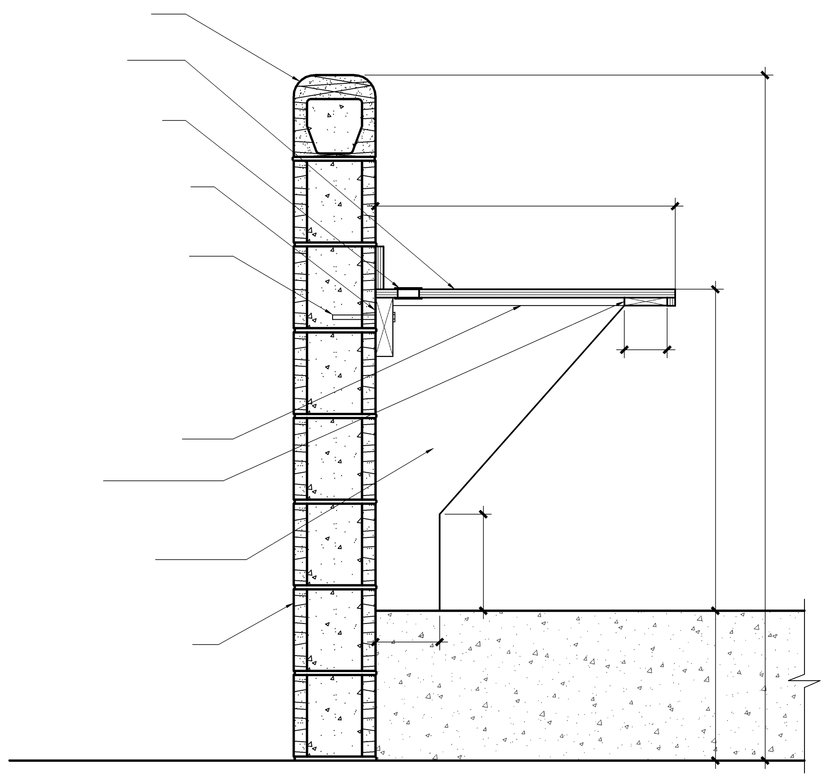

Millwork Section Detail

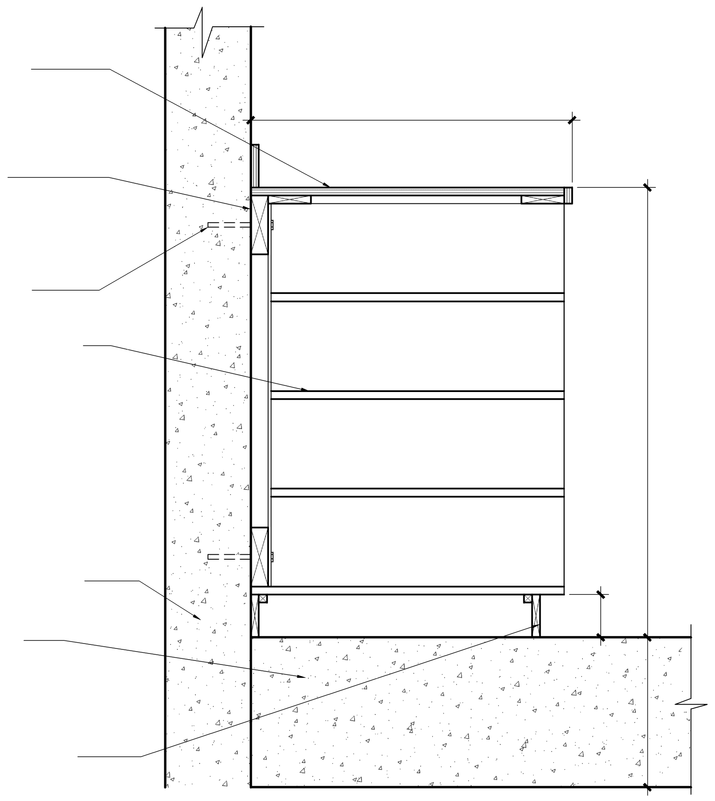

Millwork Section Detail

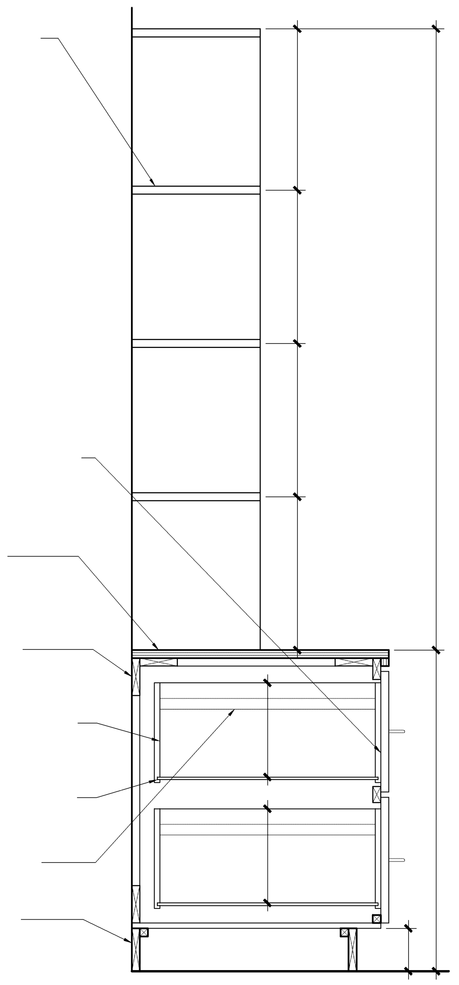

Millwork Section Detail

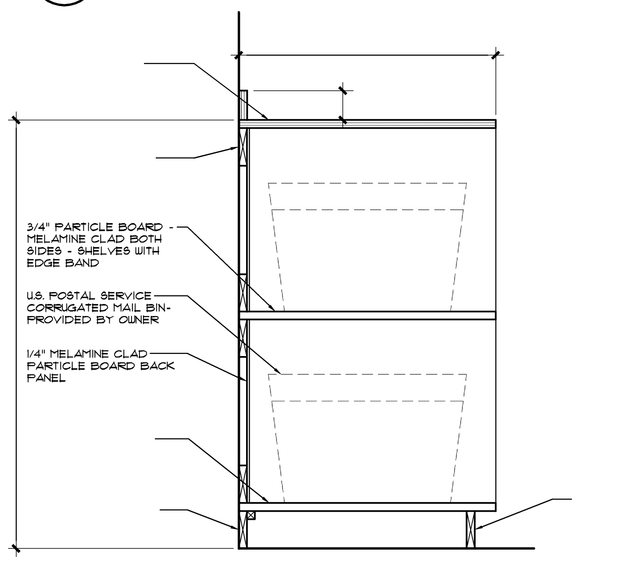

Millwork Section Detail

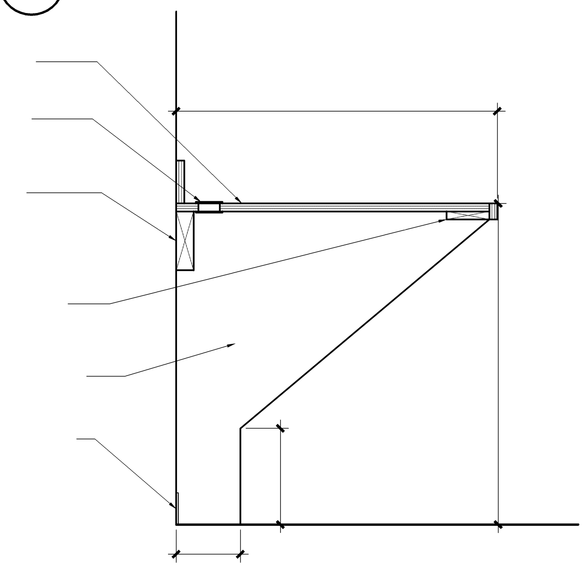

Millwork Section Detail

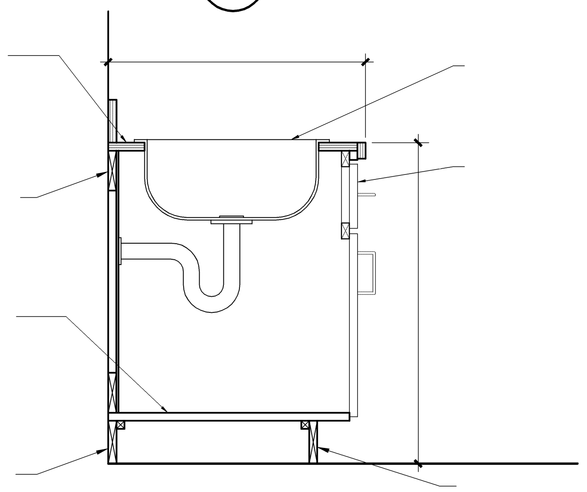

Millwork Section Detail

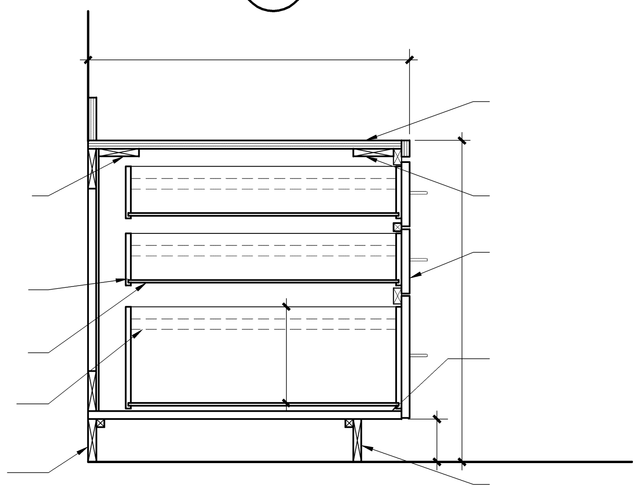

Millwork Section Detail

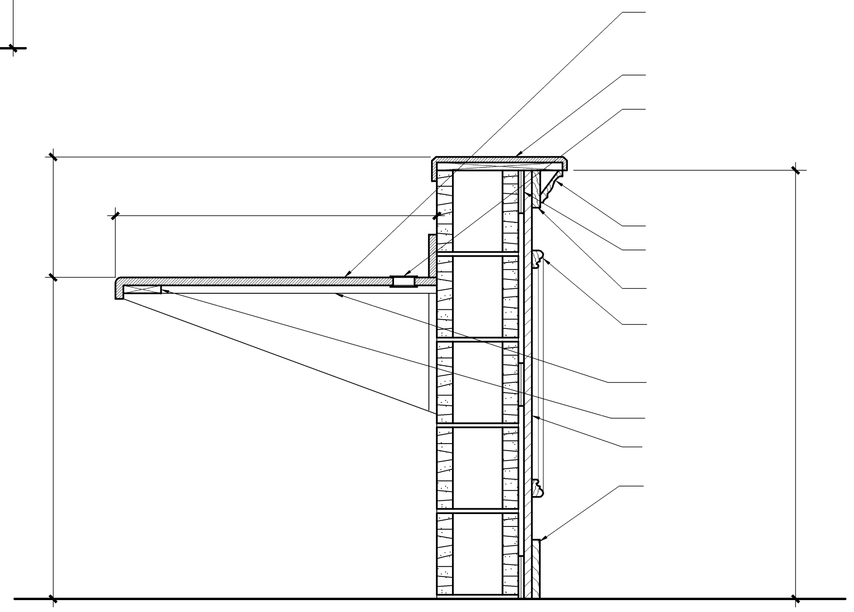

Millwork Section Detail

© 2008
PRECISION PLANNING, INC.
ALL RIGHTS RESERVED
THESE CONTRACTED DOCUMENTS, AND REPORTED REPRODUCTIONS, AS INSTRUMENTS OF PROFESSIONAL SERVICE, AND ARE THE SOLE PROPERTY OF PRECISION PLANNING, INC. UNLESS OTHERWISE AGREED TO, THEY SHALL NOT BE USED FOR ANY PURPOSE NOT SPECIFIC TO THIS PROJECT WITHOUT THE EXPRESS WRITTEN CONSENT OF THE PROJECT MANAGER NOR ARE THEY TO BE USED FOR ANY PURPOSE NOT SPECIFICALLY INDICATED AND SPECIFICALLY INDICATED AGREED WITHOUT COMPENSATION TO PRECISION PLANNING, INC.

STATE OF GEORGIA
4-4-08
LANCE G. DAVIS
REGISTERED ARCHITECT

STAMP

Precision Planning, Inc.
planners, engineers, architects & surveyors
P.O. Box 2210
400 Pike Boulevard
Lawrenceville, GA 30046-2210
(770) 338-8000 or (770) 962-8000
(Fax) (770) 822-5990

PROJECT

JACKSON COUNTY JAIL
555 GENERAL JACKSON DRIVE
JEFFERSON, GEORGIA 30549

SHEET TITLE

MILLWORK DETAILS AND INTERIOR ELEVATIONS

DESIGN	DRAWN	CHECKED
LGD	CAC	LGD

RELEASE

DATE	NO	DESCRIPTION
03/28/08		BALANCE OF REMAINING BID PACKAGES

DATE	PROJ. NUMBER	CAD FILE NAME	FILE NUMBER
03-28-08	A06136	136A8-4.dwg	

A8.4

I:\DRAWINGS\06\06136\1540 Construction Documents\136A8-4.dwg, 4/30/2009 8:11:04 AM, 750ts