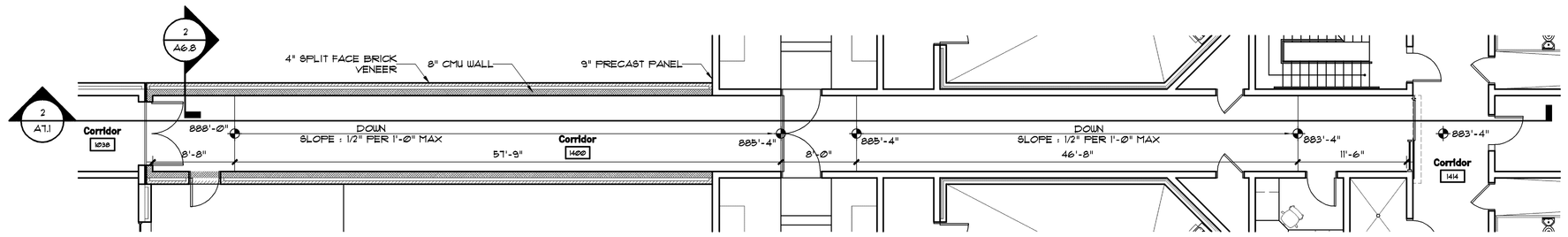

1 A7.1 Enlarged Plan at Corridor #1400

SCALE 1/8" = 1'-0"

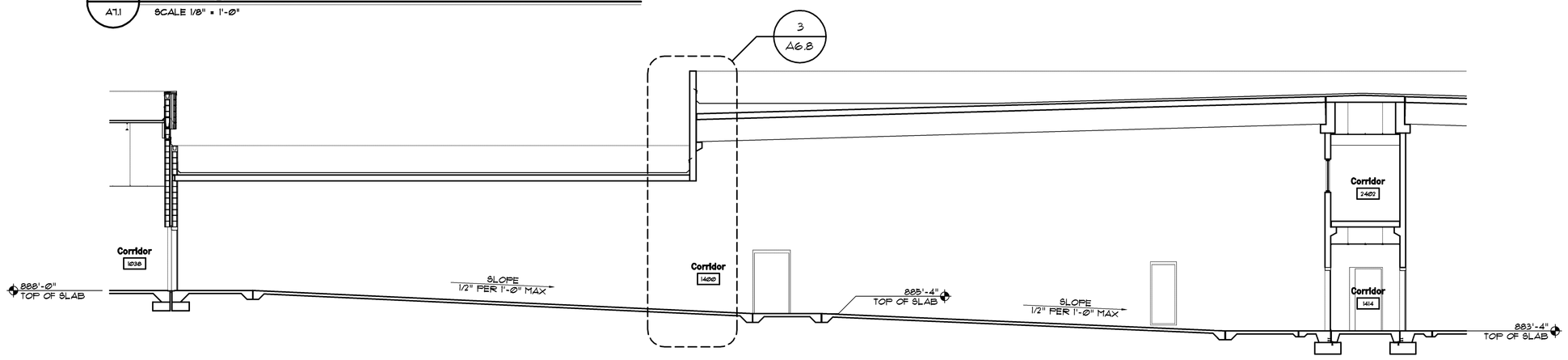

2 A7.1 Building Section at Corridor #1400

SCALE 1/8" = 1'-0"

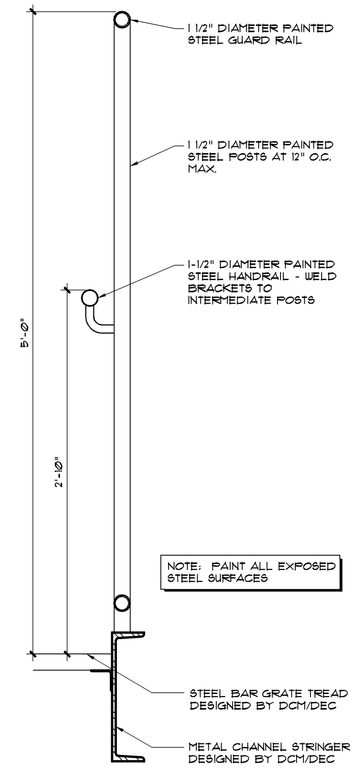

3 A7.1 Section at Railing

SCALE 1 1/2" = 1'-0"

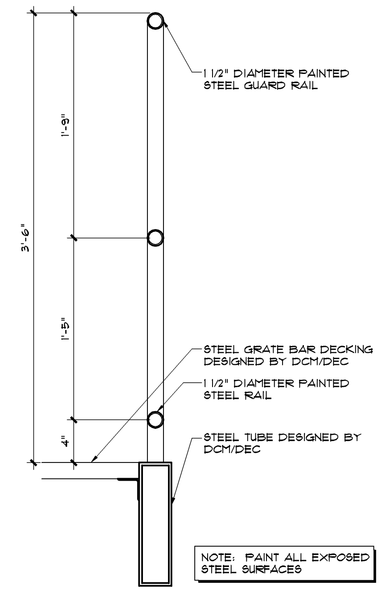

4 A7.1 Section at Railing

SCALE 1 1/2" = 1'-0"

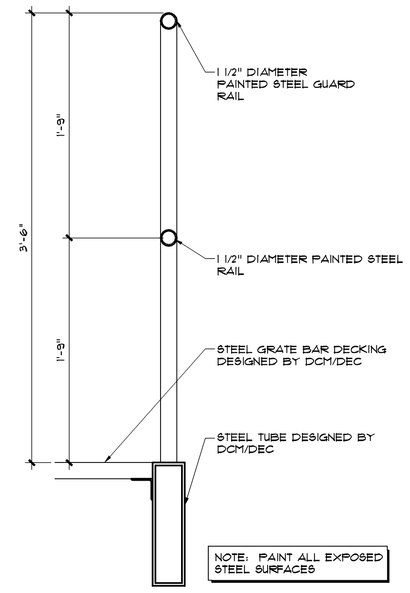

5 A7.1 Section at Railing

SCALE 1 1/2" = 1'-0"

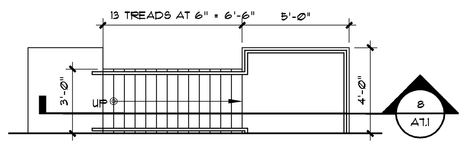

6 A7.1 Typical Plan at Fire Escape Stair

SCALE 1/4" = 1'-0"

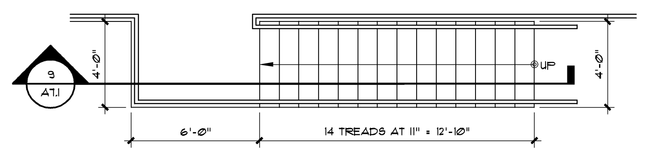

7 A7.1 Typical Plan at Dayroom Stair

SCALE 1/4" = 1'-0"

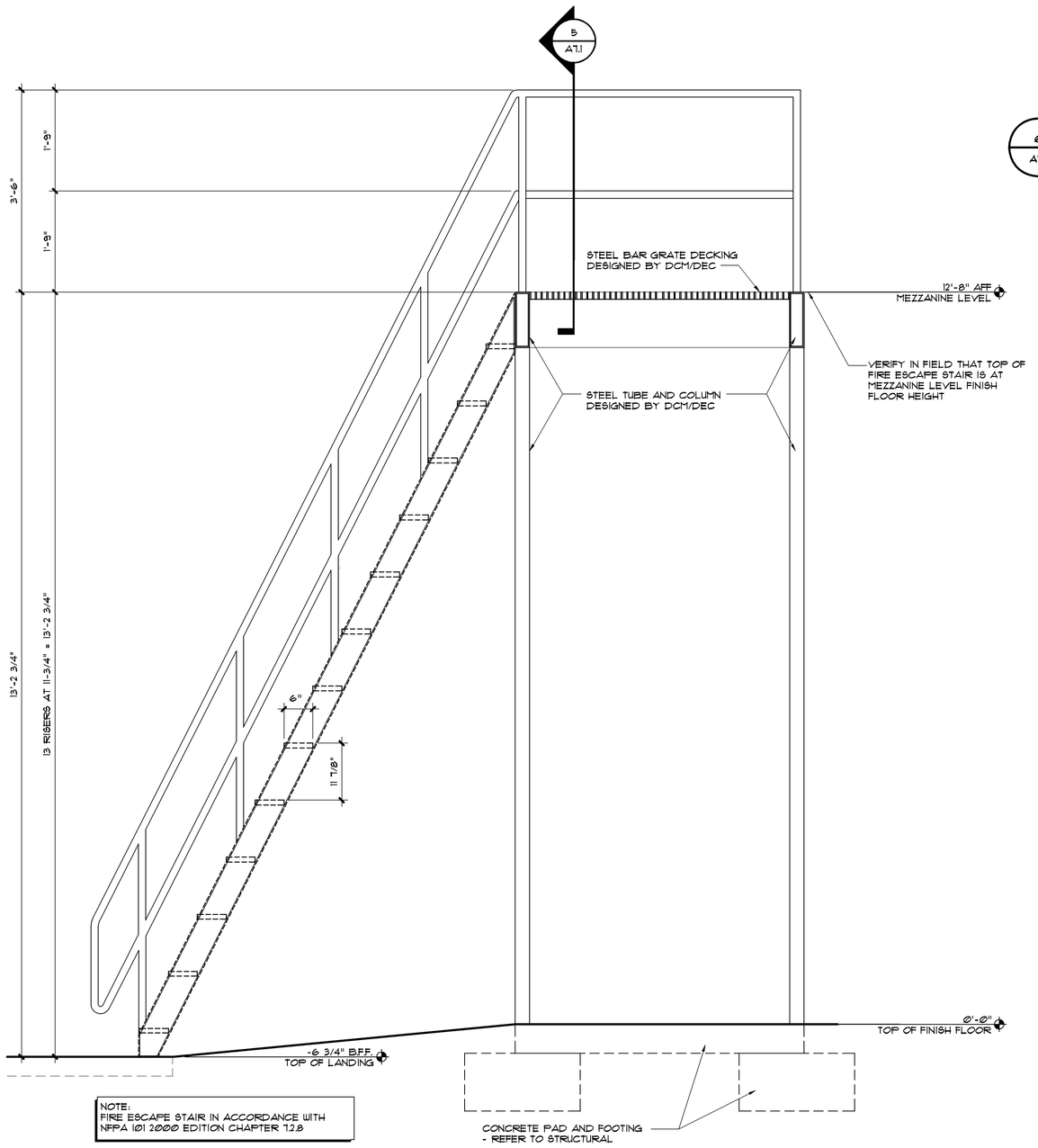

8 A7.1 Typical Section at Fire Escape Stair

SCALE 3/4" = 1'-0"

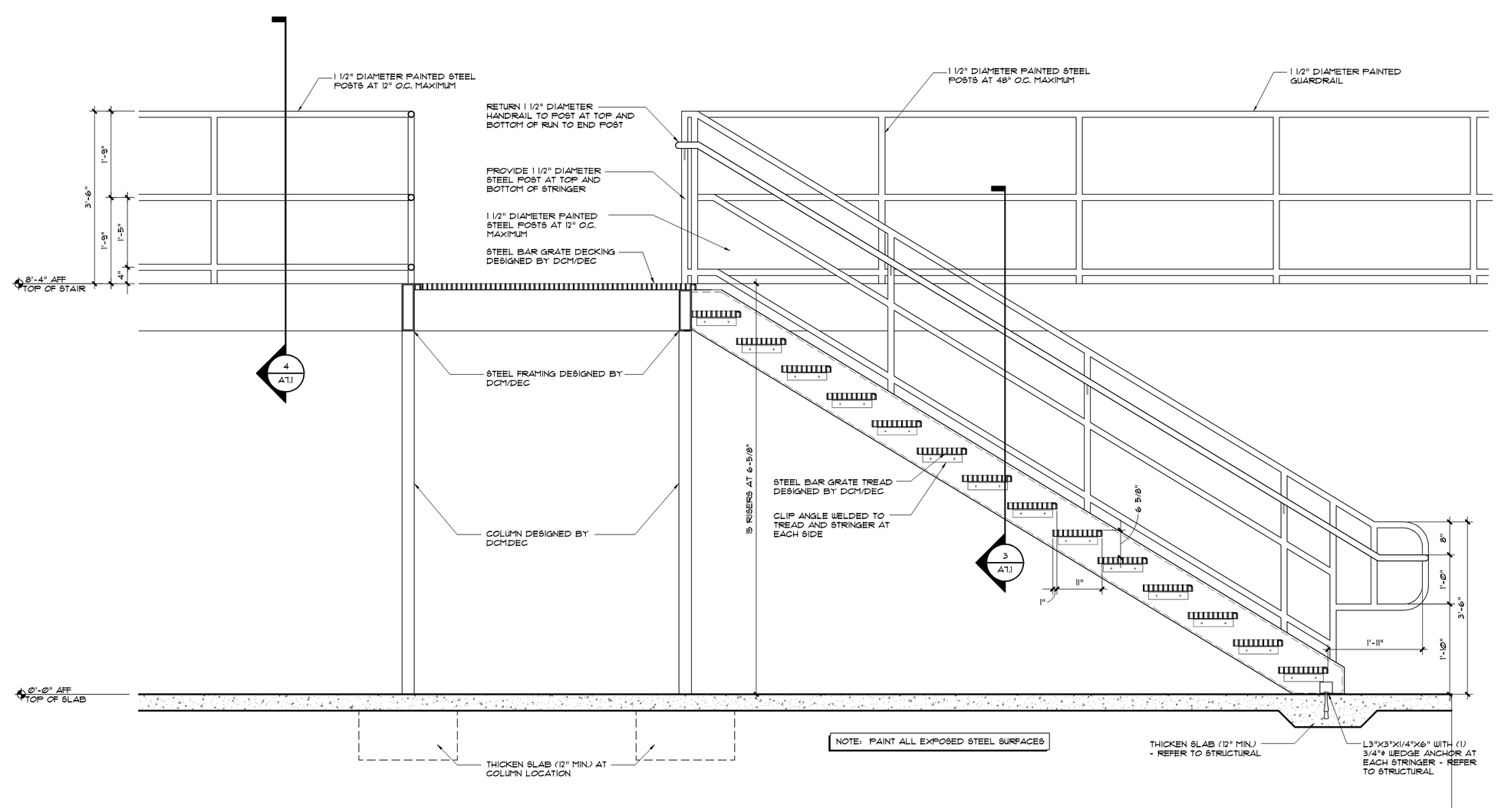

9 A7.1 Typical Section at Dayroom Stair

SCALE 1/2" = 1'-0"

© 2008
PRECISION PLANNING, INC.
ALL RIGHTS RESERVED

THESE CONSTRUCTION DOCUMENTS, INCLUDING BUT NOT LIMITED TO, ALL DRAWINGS AND PERMITTED REPRODUCTIONS, ARE THE PROPERTY OF PRECISION PLANNING, INC. AND ARE THE SOLE PROPERTY OF PRECISION PLANNING, INC. UNLESS OTHERWISE AGREED TO, THEY SHALL NOT BE USED BY ANYONE OTHER THAN THE OWNER NAMED HEREIN, AND THEY TO BE USED FOR THE PROJECT SPECIFICALLY INDICATED HEREIN. THEY SHALL NOT BE REPRODUCED WITHOUT WRITTEN COMPENSATION TO PRECISION PLANNING, INC.

STATE OF GEORGIA
4-4-08
LANCE G. DAVIS
REGISTERED ARCHITECT

STAMP

Precision Planning, Inc.
planners, engineers, architects & surveyors
P.O. Box 2210
400 Pike Boulevard
Lawrenceville, GA 30046-2210
(770) 338-8000 or (770) 962-8000
(Fax) (770) 822-5990

JACKSON COUNTY JAIL

555 GENERAL JACKSON DRIVE
JEFFERSON, GEORGIA 30549

PROJECT

STAIR AND RAMP PLANS, SECTIONS AND DETAILS

DESIGN	DRAWN	CHECKED
LGD	DMM	LGD

SHEET TITLE

DATE	NO	DESCRIPTION
1-18-08	R1	#038 CORRIDOR BETWEEN BUILDINGS
03/28/08		BALANCE OF REMAINING BID PACKAGES

RELEASE

03-28-08	DATE
A06536	PROJ. NUMBER
136A7-1.dwg	CAD FILE NAME
	FILE NUMBER

A7.1

I:\DRAWINGS\06\06136\1540 Construction Documents\136A7-1.dwg, 4/30/2009 8:08:59 AM, 7526s