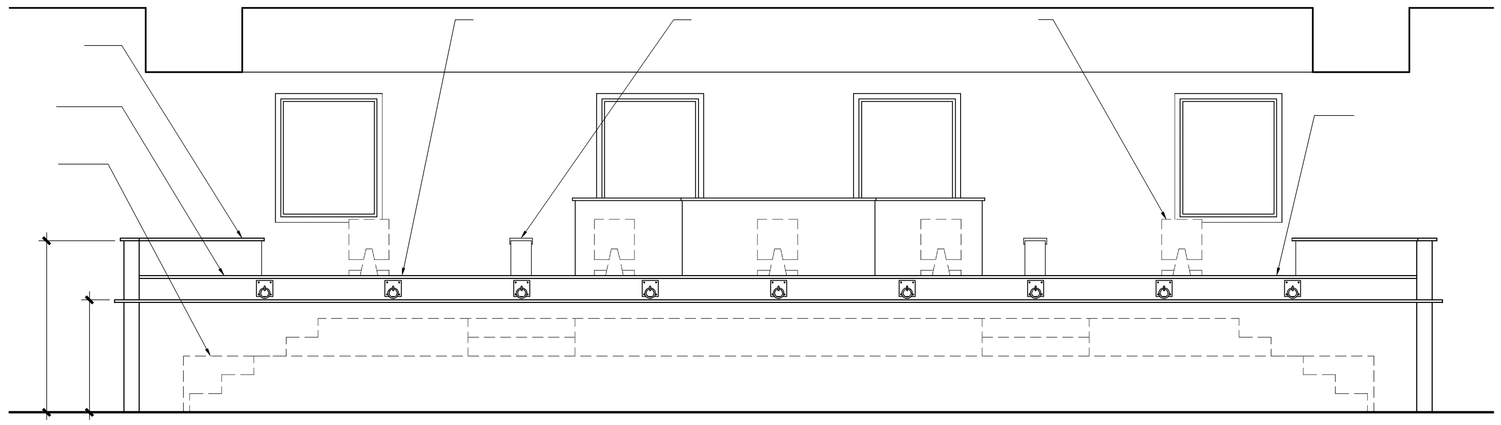

Interior Elevation at Booking 1146

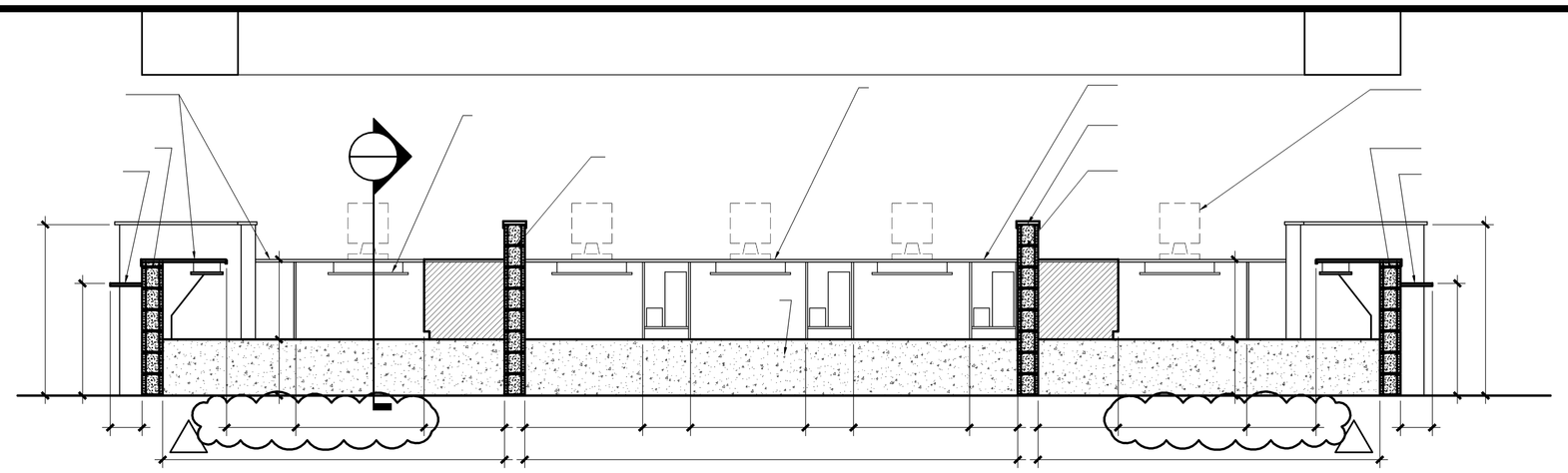

Interior Elevation at Booking 1146

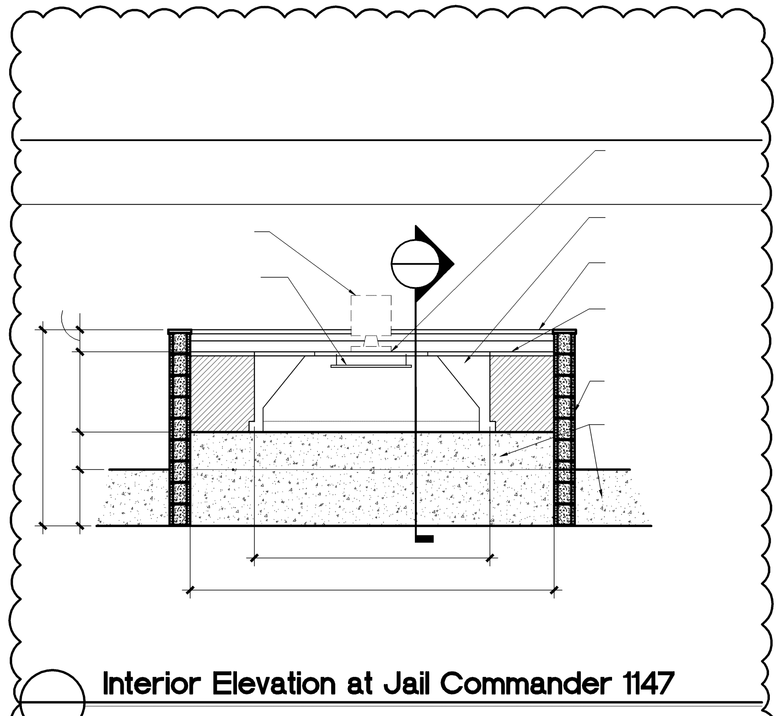

Interior Elevation at Jail Commander 1147

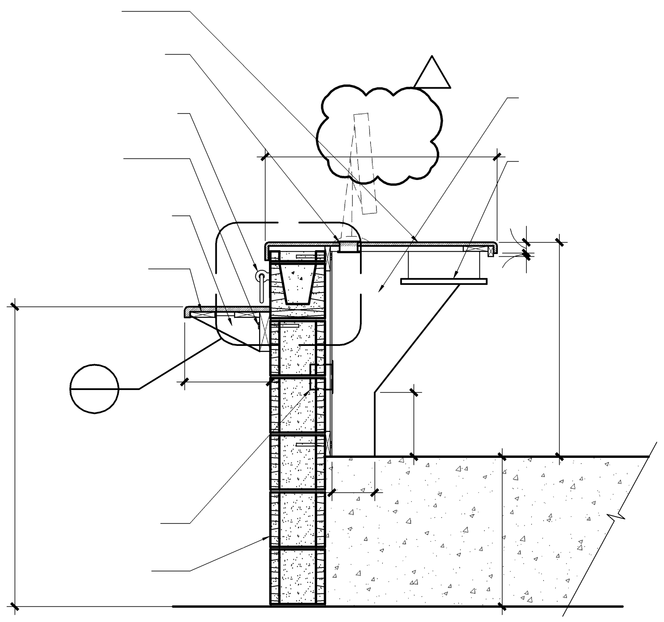

Section Detail at Booking 1146

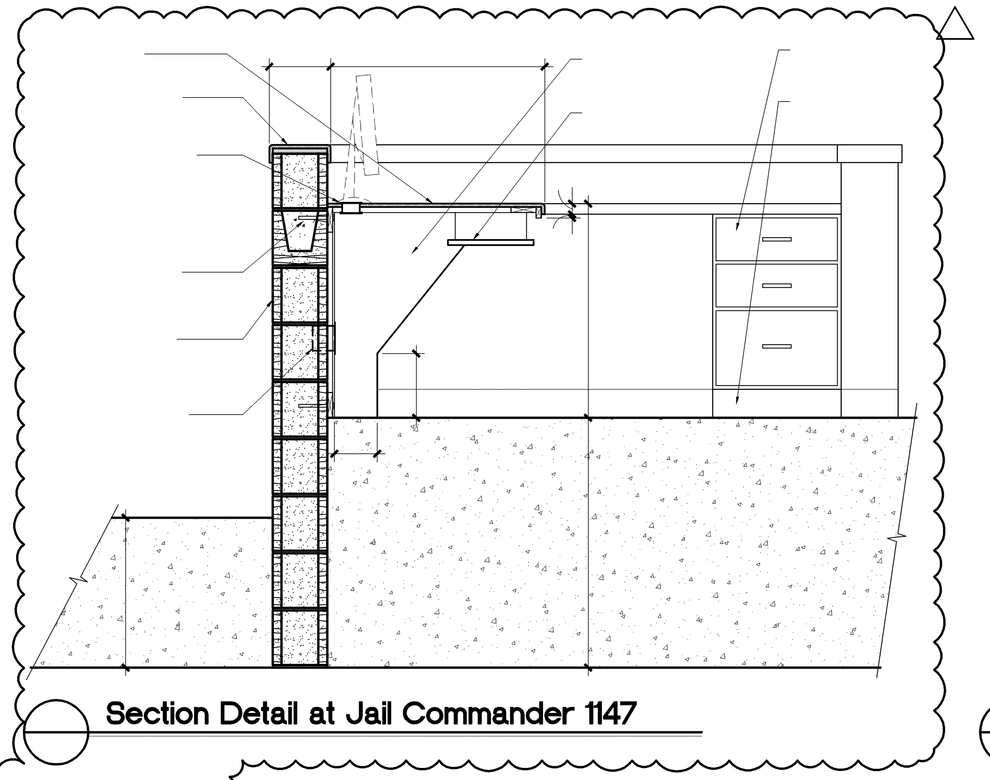

Section Detail at Jail Commander 1147

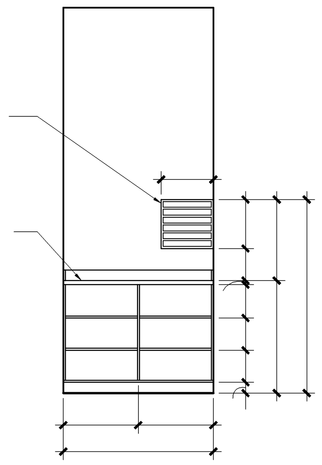

Interior Elevation at Evidence Vestibule 1255

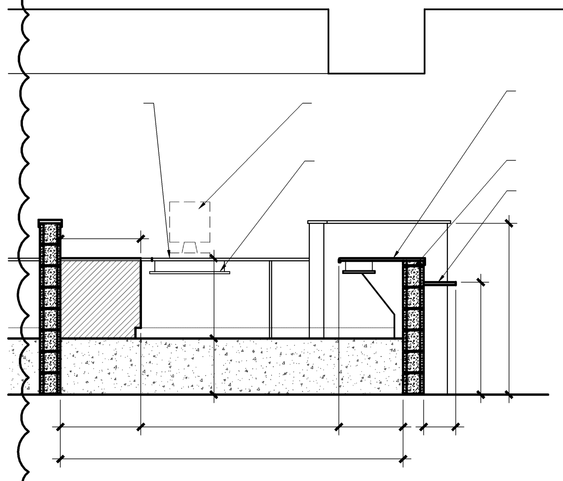

Interior Elevation at Booking 1146

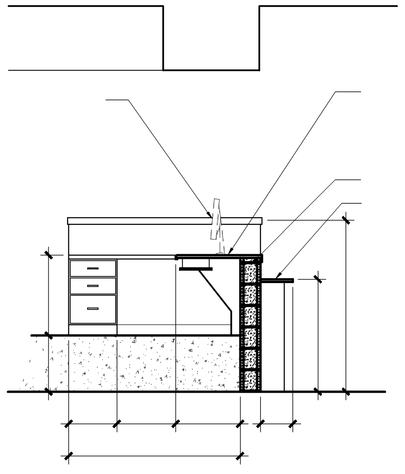

Interior Elevation at Booking 1146

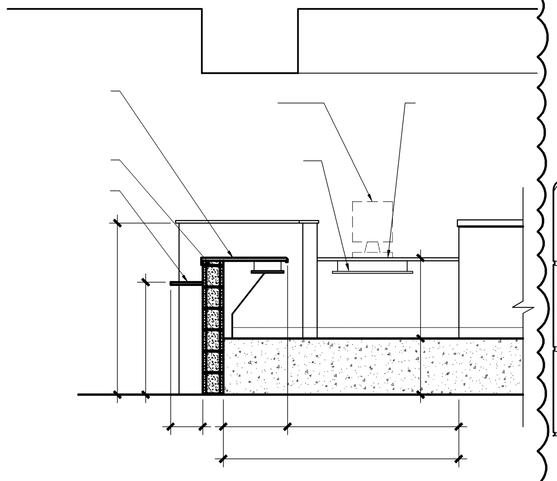

Interior Elev. at Booking 1146

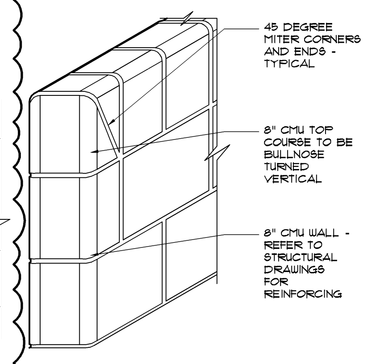

CMU Wall Detail

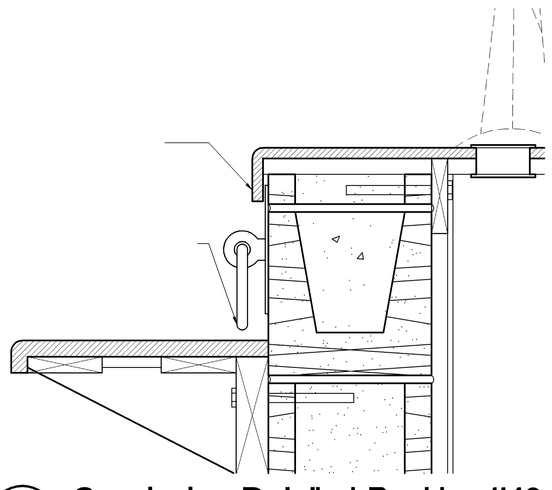

Countertop Detail at Booking 1146

Interior Elevation Notes

1. SHADING ON FRONT OF CABINETS INDICATES SINK BASE WITH REMOVABLE FRONT. REMAINING CABINET AND COUNTER MUST BE CAPABLE OF SUPPORTING MIN. 200LB. AT FRONT COUNTER EDGE. SEE DETAIL 9/A8.4
2. EXTEND FLOOR FINISH AND BASE MATERIAL INTO KNEE SPACES. (TYPICAL)
3. INSIDE FACES OF ALL CABINETS SHALL BE WHITE.
4. PROVIDE PLASTIC LAMINATE ON ALL EXPOSED SURFACES.
5. PROVIDE CHROME CONCEALED SELF-CLOSING HINGES.
6. PROVIDE SATIN STAINLESS STEEL PULLS.

NOTE: ALL COUNTERTOPS DEAD ENDING INTO WALLS SHALL HAVE A SIDESPLASH.

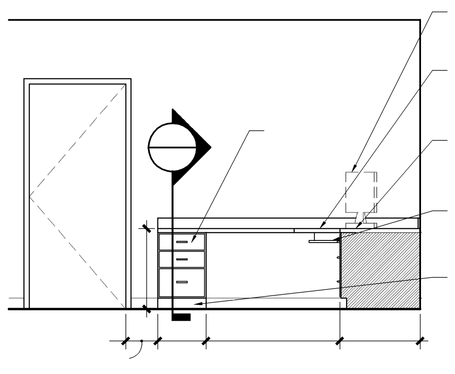

Interior Elev. at Jail Admin. 1067

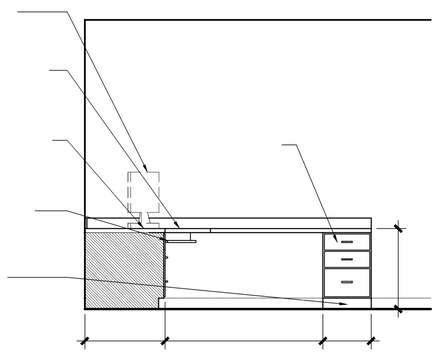

Interior Elev. at Jail Admin. 1067

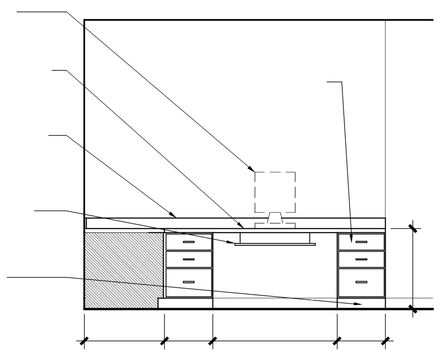

Interior Elev. at Jail Admin. 1067

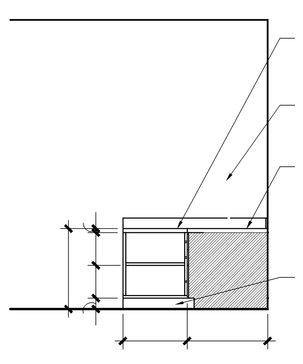

Interior Elev. at Jail Admin. 1067

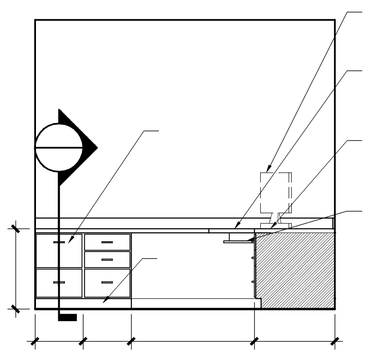

Interior Elev. at Office 1403

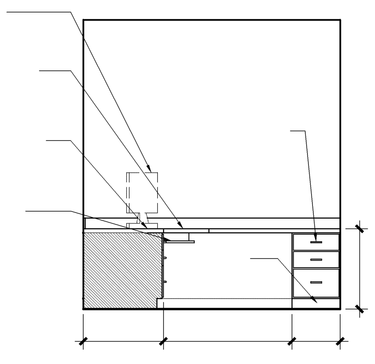

Interior Elev. at Office 1403

© 2008
PRECISION PLANNING, INC.
ALL RIGHTS RESERVED

THESE CONTRACTORS DOCUMENTS, AND REPORTED REPRODUCTIONS, AS INSTRUMENTS OF SERVICE, AND AS THE SALE PROPERTY OF PRECISION PLANNING, INC. UNLESS OTHERWISE AGREED TO, THEY SHALL NOT BE REPRODUCED, PUBLISHED OR MADE MANNER NOR ARE THEY TO BE USED FOR ANY PURPOSE OTHER THAN THOSE SPECIFICALLY INDICATED HEREIN WITHOUT WRITTEN PERMISSION OF PRECISION PLANNING, CORPORATION TO PRECISION PLANNING, INC.

STATE OF GEORGIA
LANCE G. DAVIS
REGISTERED ARCHITECT

STAMP

Precision Planning, Inc.
planners, engineers, architects & surveyors
P.O. Box 2210
400 Pike Boulevard
Lawrenceville, GA 30046-2210
(770) 338-8000 or (770) 962-8000
(Fax) (770) 822-5990

PROJECT

JACKSON COUNTY JAIL
555 GENERAL JACKSON DRIVE
JEFFERSON, GEORGIA 30549

MILLWORK DETAILS AND INTERIOR ELEVATIONS

DESIGN	DRAWN	CHECKED
LGD	CAC	LGD

SHEET TITLE

DATE	NO	DESCRIPTION
03/28/08		BALANCE OF REMAINING BID PACKAGES
04/18/08	1	ASI #006 FURNISHINGS COORDINATION / OWNER REVISIONS
09/24/08	2	ASI #015 OWNER REVISIONS AT BOOKING AREA

RELEASE

DATE	PROJ. NUMBER	CAD FILE NAME	FILE NUMBER
03-28-08	A06036	136A8-4.dwg	

A8.5

I:\DRAWINGS\06\06136\540 Construction Documents\136A8-5.dwg, 4/30/2009 8:16:25 AM, 752ts