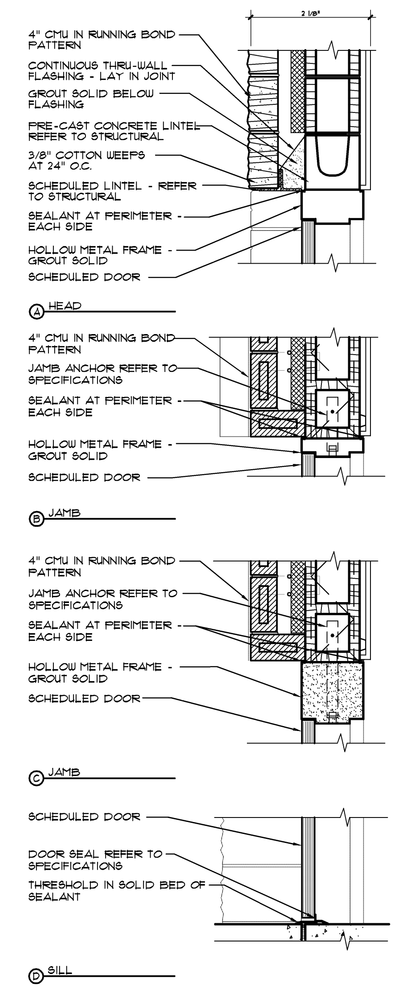

NOTE: REFER TO DOOR SCHEDULE FOR SECURITY REQUIREMENTS

1 Exterior Doors - CMU

A10.24 SCALE 1" = 1'-0"

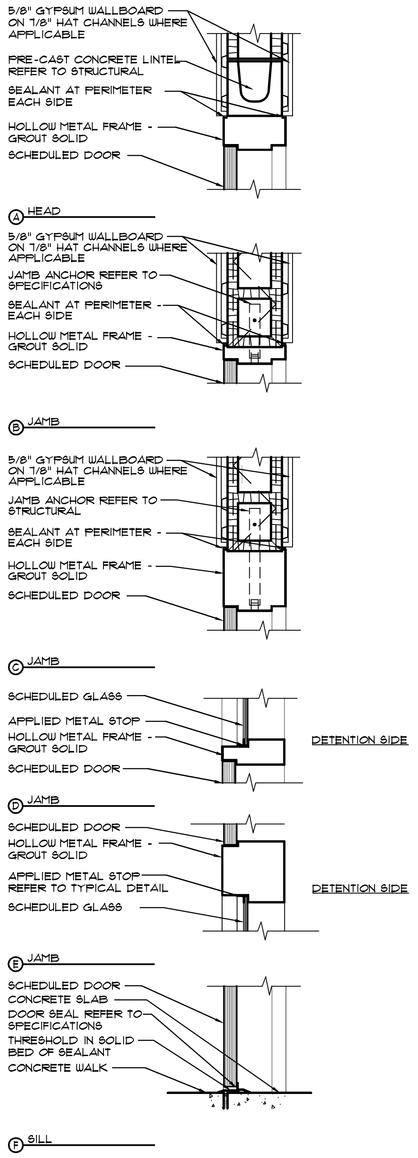

NOTE: REFER TO DOOR SCHEDULE FOR SECURITY REQUIREMENTS

2 Interior Doors - CMU

A10.24 SCALE 1" = 1'-0"

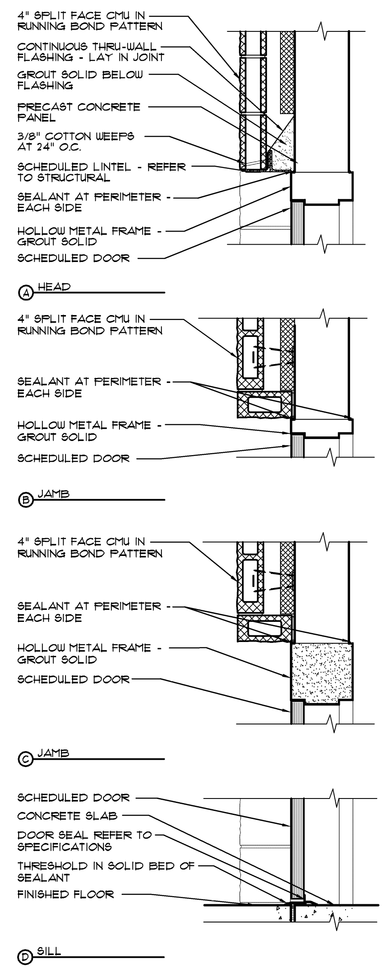

NOTE: REFER TO DOOR SCHEDULE FOR SECURITY REQUIREMENTS

3 Typical Interior H.M. Window - Precast

A10.24 SCALE 1" = 1'-0"

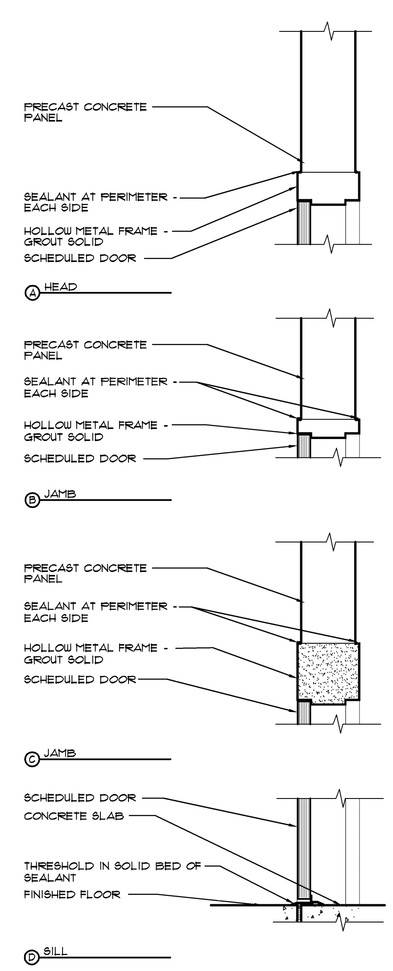

NOTE: REFER TO DOOR SCHEDULE FOR SECURITY REQUIREMENTS

4 Doors- Precast

A10.24 SCALE 1" = 1'-0"

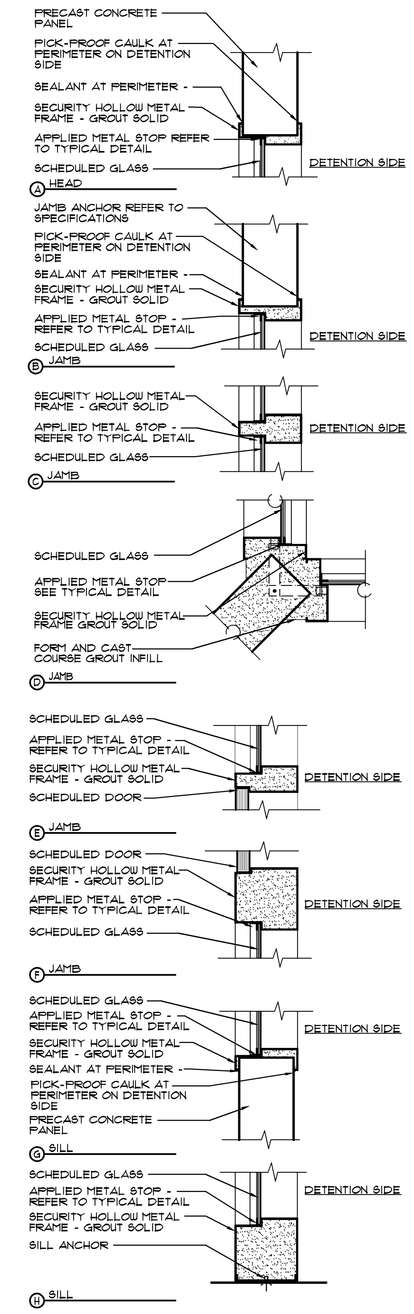

5 Interior / Exterior Windows - Precast

A10.24 SCALE 1" = 1'-0"

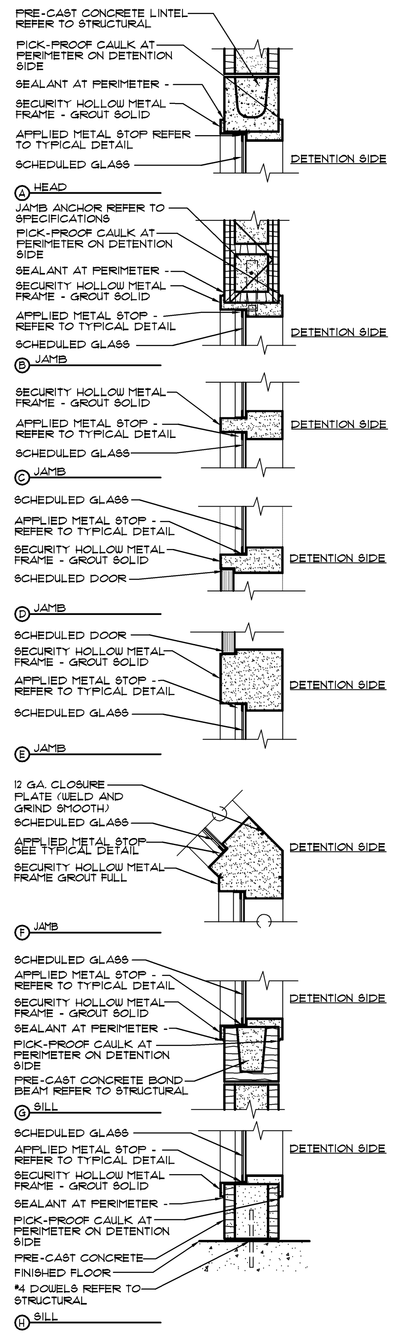

6 Typical Int. H.M. Window Dtls.

A10.24 SCALE 1" = 1'-0"

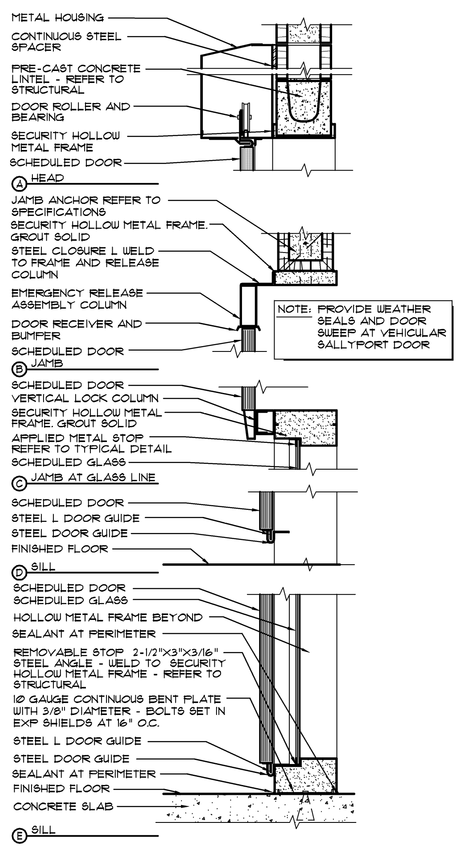

NOTE: PROVIDE WEATHER SEALS AND DOOR SWEEP AT VEHICULAR SALLYPORT DOOR

7 Slider Door Details

A10.24 SCALE 1" = 1'-0"

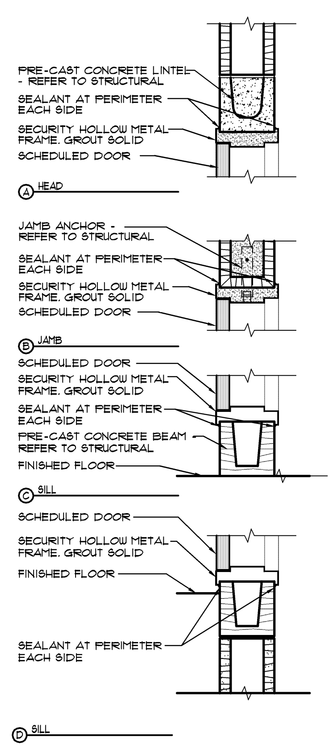

8 Plumbing Chase Door Details

A10.24 SCALE 1" = 1'-0"

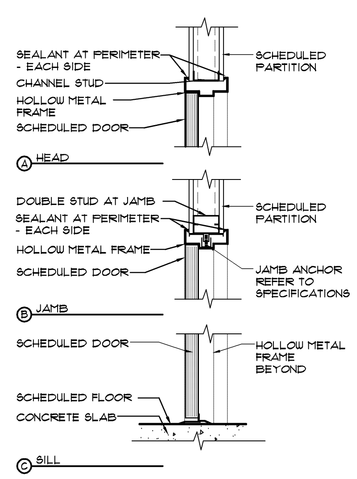

9 Interior Door - Metal Studs

A10.24 SCALE 1" = 1'-0"

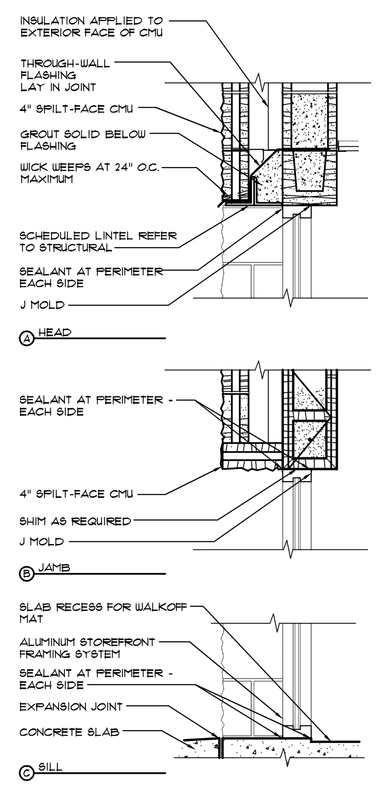

10 Aluminum Storefront Details

A10.24 SCALE 1" = 1'-0"

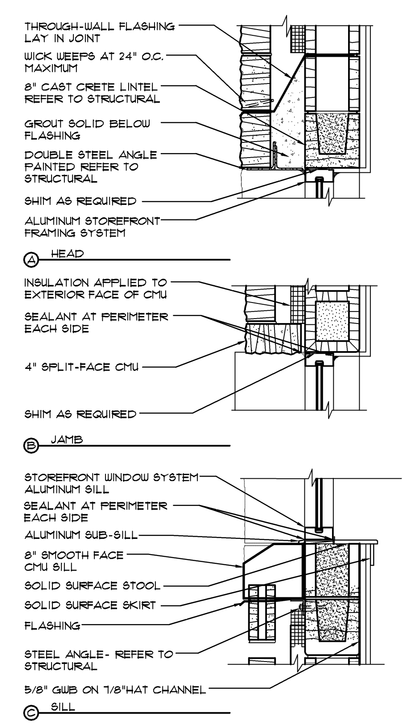

11 Aluminum Storefront Details at Exterior Windows

A10.24 SCALE 1" = 1'-0"

© 2008
PRECISION PLANNING, INC.
ALL RIGHTS RESERVED
THESE CONTRACT DOCUMENTS, INCLUDING BUT NOT LIMITED TO, ARCHITECTURAL WORKS, ARE THE PROPERTY OF PRECISION PLANNING, INC. (PPI) AND PROTECTED UNDER FEDERAL COPYRIGHT LAWS. THEY ARE TO BE RETURNED TO PPI UPON REQUEST. THESE DOCUMENTS ARE NOT TO BE REPRODUCED, CHANGED OR COPIED IN ANY FORM OR MANNER WHATSOEVER, NOR ARE THEY TO BE ASSIGNED TO ANY THIRD PARTY WITHOUT PRIOR WRITTEN CONSENT OF PPI. ANY USE OF THESE DOCUMENTS FOR ANY PROJECT OTHER THAN THE SPECIFICALLY INDICATED PROJECT WITHOUT WRITTEN AUTHORIZATION BY PPI SHALL BE AT THE USER'S SOLE RISK AND WITHOUT LIABILITY TO PPI. ANY REPRODUCTION OR ALTERATION WITHOUT PRIOR WRITTEN CONSENT IS PROHIBITED.

STATE OF GEORGIA
4-4-08
LANCE G. DAVIS
REGISTERED ARCHITECT

STAMP

Precision Planning, Inc.
planners, engineers, architects & surveyors
P.O. Box 2210
400 Pike Boulevard
Lawrenceville, GA 30046-2210
(770) 338-8000 or (770) 962-8000
(Fax) (770) 822-5990

PROJECT

JACKSON COUNTY JAIL
555 GENERAL JACKSON DRIVE
JEFFERSON, GEORGIA 30549

DOOR AND WINDOW DETAILS

DESIGN	DRAWN	CHECKED
LGD	HL	LGD

SHEET TITLE

DATE	NO	DESCRIPTION
10/31/07		D.E.C./PLUMBING BID PACKAGE RELEASE
12/21/07		MECHANICAL/ELECTRICAL BID PACKAGE RELEASE
03/28/08		BALANCE OF REMAINING BID PACKAGES

RELEASE

03-28-08
DATE

A06136
PROJ. NUMBER

136A10.24.dwg
CAD FILE NAME

FILE NUMBER

A10.24

I:\DRAWINGS\06\06136\1540 Construction Documents\136A10-24.dwg, 4/30/2009 8:27:41 AM, 1:32ts