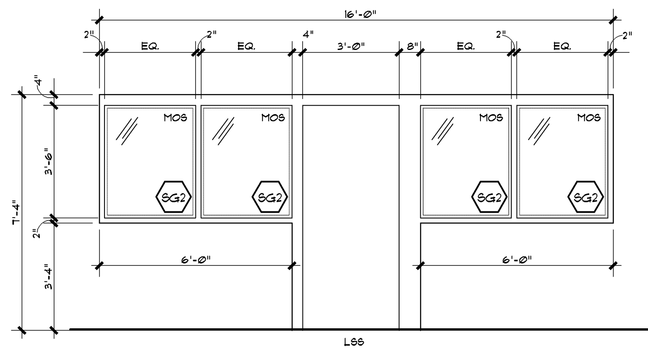

1 A10.22 **H.M. Elevation - Seg. Dayroom #1022**
SCALE 3/8" = 1'-0"

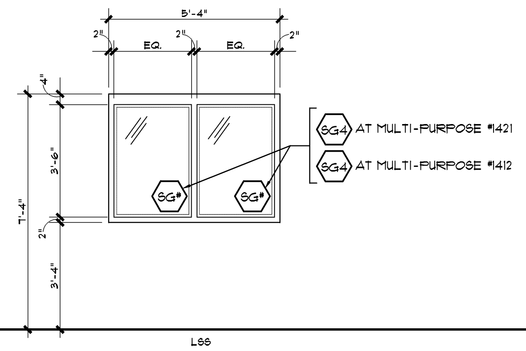

2 A10.22 **H.M. Elevation - Housing Pod**
SCALE 3/8" = 1'-0"

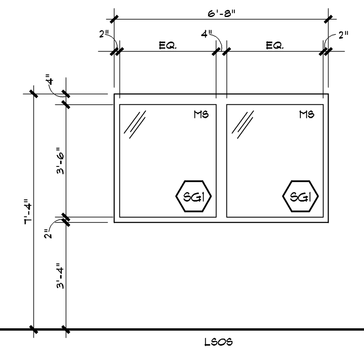

3 A10.22 **H.M. Elevation - Vestibule #1021A**
SCALE 3/8" = 1'-0"

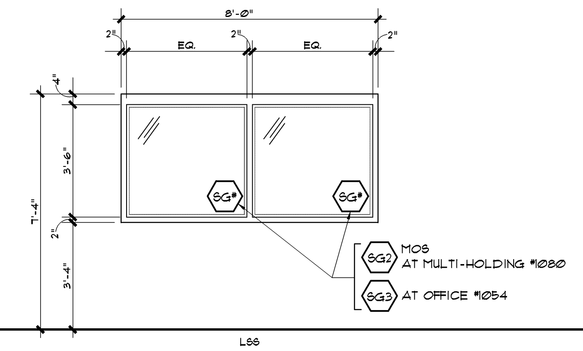

4 A10.22 **H.M. Elevation - Main Building**
SCALE 3/8" = 1'-0"

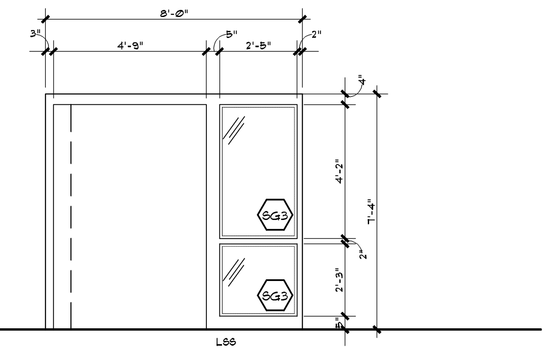

5 A10.22 **H.M. Elevation - Door #1079, #1096B**
SCALE 3/8" = 1'-0"

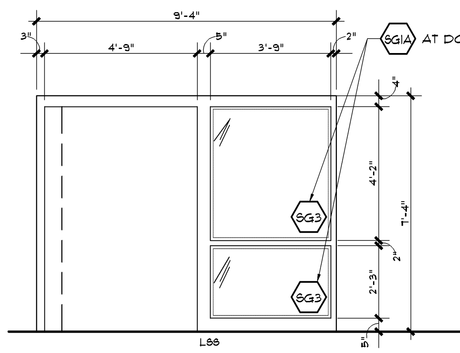

6 A10.22 **H.M. Elevation - Door #1038A, #1134A, #1134B**
SCALE 3/8" = 1'-0"

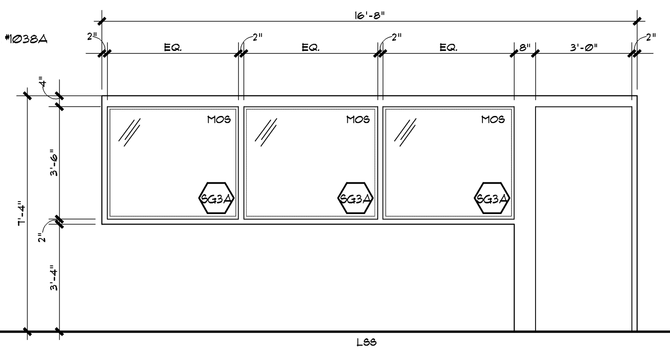

7 A10.22 **H.M. Elevation - Holding #1080**
SCALE 3/8" = 1'-0"

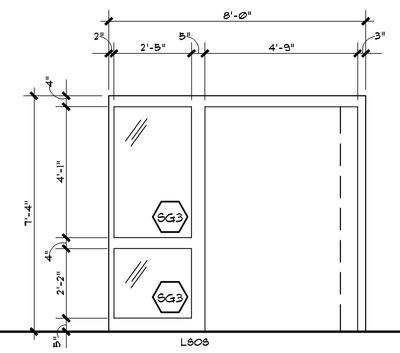

8 A10.22 **H.M. Elevation - Door #1096A, #1104B, #1400**
SCALE 3/8" = 1'-0"

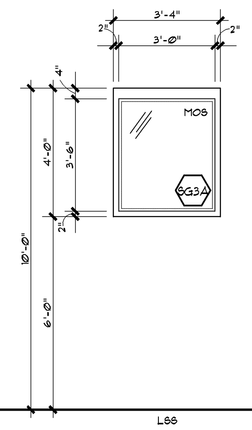

9 A10.22 **H.M. Elevation - Juv. Holding #1100,#1101**
SCALE 3/8" = 1'-0"

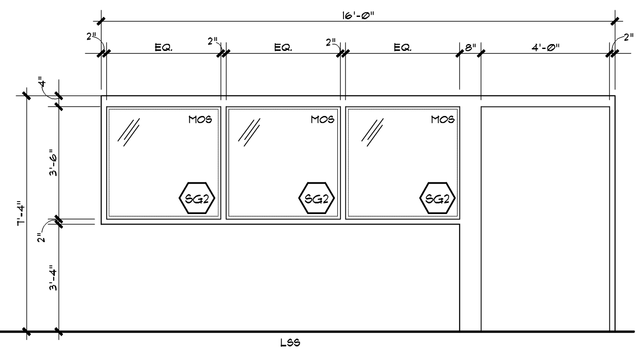

10 A10.22 **H.M. Elevation - Patient #1144**
SCALE 3/8" = 1'-0"

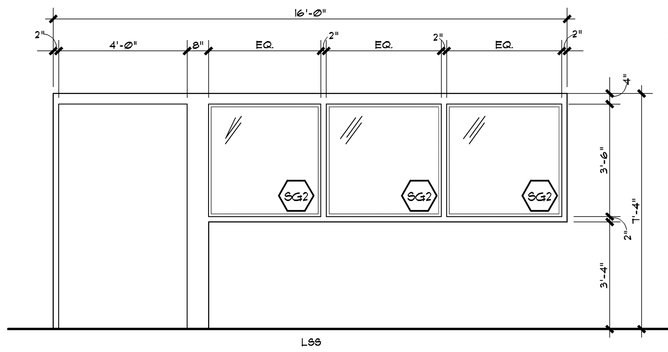

11 A10.22 **H.M. Elevation - Patient #1138**
SCALE 3/8" = 1'-0"

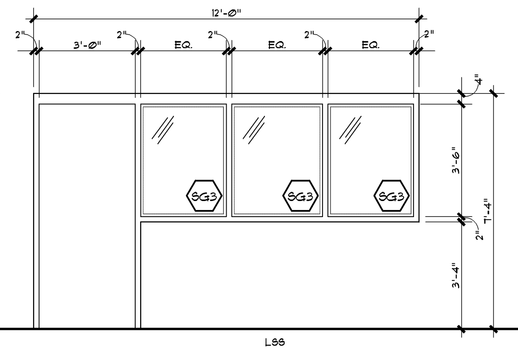

12 A10.22 **H.M. Elevation - Kit. Office #1054**
SCALE 3/8" = 1'-0"

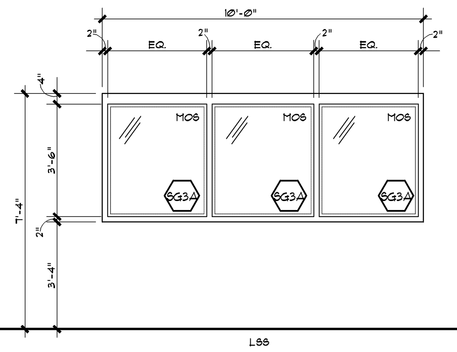

13 A10.22 **H.M. Elevation - Taping #1121**
SCALE 3/8" = 1'-0"

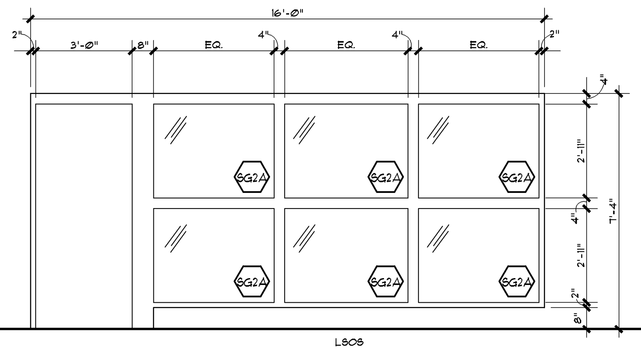

14 A10.22 **H.M. Elevation - Dining #1039**
SCALE 3/8" = 1'-0"

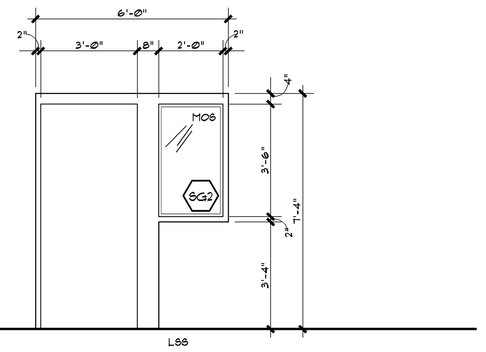

15 A10.22 **H.M. Elevation - Multi Purpose #1421**
SCALE 3/8" = 1'-0"

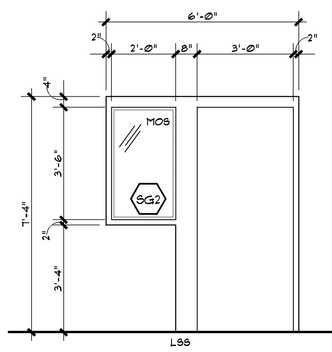

16 A10.22 **H.M. Elevation - Multi Purpose #1412**
SCALE 3/8" = 1'-0"

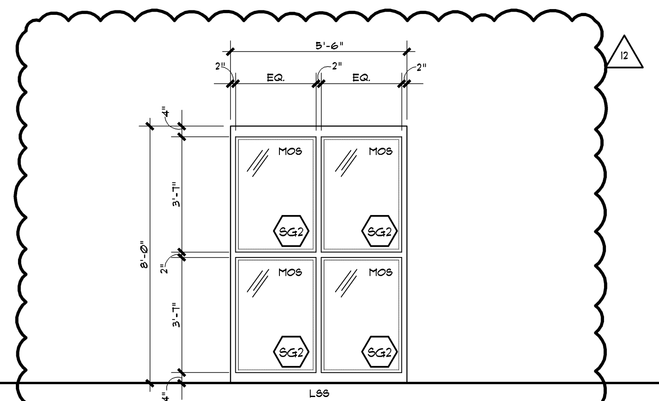

17 A10.22 **H.M. Elevation - Corridor #2402**
SCALE 3/8" = 1'-0"

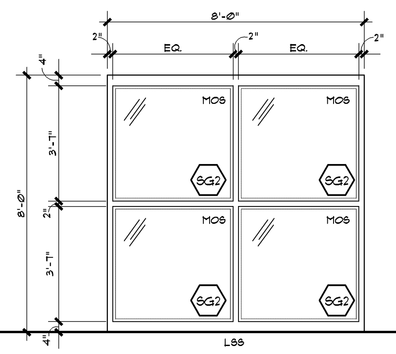

18 A10.22 **H.M. Elevation - Tower #2405, #2408**
SCALE 3/8" = 1'-0"

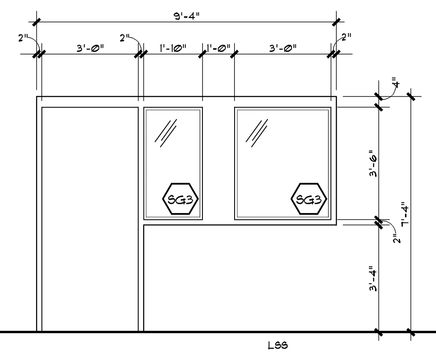

19 A10.22 **H.M. Elevation - Veg. Prep. Room 1049**
SCALE 3/8" = 1'-0"

Fire Rated Glazing Schedule

FG-1	FIRE RATED WIRELESS GLAZING BY FIRELITE NT BY TECHNICAL GLASS PRODUCTS. REFER TO SPECIFICATIONS.

Security Glazing Schedule

SG1	1-1/8" NOMINAL, ONE WAY MIRRORED, GLASS CLAD POLYCARBONATE, GLOBAL SECURITY GLAZING OR APPROVED EQUAL - REFER TO SPECIFICATIONS
SG1A	1" NOMINAL, CLEAR GLASS CLAD POLYCARBONATE, GLOBAL SECURITY GLAZING OR APPROVED EQUAL - REFER TO SPECIFICATIONS
SG1B	1-1/8" NOMINAL, CLEAR GLASS CLAD POLYCARBONATE, BULLET RESISTANT GLAZING, GLOBAL SECURITY GLAZING OR APPROVED EQUAL - REFER TO SPECIFICATIONS
SG2	7/8" NOMINAL, MIRRORED GLASS CLAD POLYCARBONATE, GLOBAL SECURITY GLAZING OR APPROVED EQUAL - REFER TO SPECIFICATIONS
SG2A	3/4"NOMINAL, INSULATED CLEAR GLASS CLAD POLYCARBONATE, GLOBAL SECURITY GLAZING OR APPROVED EQUAL.
SG3	9/16" NOMINAL, CLEAR GLASS CLAD POLYCARBONATE, GLOBAL SECURITY GLAZING OR APPROVED EQUAL - REFER TO SPECIFICATIONS
SG3A	11/16" NOMINAL, MIRRORED GLASS CLAD POLYCARBONATE - GLOBAL SECURITY GLAZING OR APPROVED EQUAL - REFER TO SPECIFICATIONS
SG4	9/16" NOMINAL, LAMINATED HEAT STRENGTHENED GLASS - GLOBAL SECURITY GLAZING OR APPROVED EQUAL - REFER TO SPECIFICATIONS

Non Security Glazing Schedule

G1	1/4" TEMPERED CLEAR GLASS.
G2	1" INSULATED PILKINGTON SUPERGREY HIGH-PERFORMANCE TINTED FLOAT GLASS WITH ARGON GAS OR ARCHITECT APPROVED EQUAL. 1. 1/4" SUPERGREY GLASS OUTER LITE 2. 1/2" AIR SPACE WITH ARGON GAS 3. 1/4" ENERGY ADVANTAGE LOW-E GLASS INNER LITE • U-FACTOR (SUMMER) = 0.33 • U-FACTOR (WINTER) = 0.28 • SHGC = 0.14
G3	TEMPERED 1" INSULATED PILKINGTON SUPERGREY HIGH-PERFORMANCE TINTED FLOAT GLASS WITH ARGON GAS OR ARCHITECT APPROVED EQUAL. 1. 1/4" TEMPERED SUPERGREY GLASS OUTER LITE 2. 1/2" AIR SPACE WITH ARGON GAS 3. 1/4" TEMPERED ENERGY ADVANTAGE LOW-E GLASS INNER LITE • U-FACTOR (SUMMER) = 0.33 • U-FACTOR (WINTER) = 0.28 • SHGC = 0.14

General Notes

1. ALL DIMENSIONS ARE UNIT DIMENSIONS. MASONRY OPENINGS TO BE FIELD VERIFIED.
2. REFER TO DOOR AND WINDOW REFERENCE PLANS FOR GLAZING LOCATIONS TO RECIEVE BLASTGUARD WINDOW FILM
3. BLOCKING IN DOORS FOR SECURE ATTACHMENT OF ALL HARDWARE SHALL BE COORDINATED BY THE CONTRACTOR.
4. ABBREVATIONS:

MS	MIRROR SIDE
MOS	MIRROR OPPOSITE SIDE
LSS	LOOSE STOP SIDE
LSOS	LOOSE STOP OPPOSITE SIDE

Code Notes

1. EACH WINDOW AND DOOR LOCATED IN WALLS WHICH SEPARATE CONDITIONED AND UNCONDITIONED SPACE (INCLUDING BUILDING EXTERIOR) SHALL BE LABELED BY THE MANUFACTURER TO CERTIFY COMPLIANCE WITH THE REQUIREMENTS OF NATIONAL FENESTRATION RATING COUNCIL.
2. IN ACCORDANCE WITH TABLE 5.5-3 OF THE ASHRAE STANDARD 90.1-2004 MAXIMUM ASSEMBLY U-FACTOR SHALL BE 0.57, MAXIMUM SHGC SHALL BE 0.39.
3. IN ACCORDANCE WITH ASHRAE STANDARD 90.1-2004 AIR LEAKAGE SHALL NOT EXCEED 1.0 CFM/FT² FOR GLAZED SWINGING ENTRANCE DOORS.
4. U -FACTOR, SHGC AND AIR LEAKAGE SHALL BE DETERMINED BY A LABORATORY ACCREDITED BY A NATIONALLY RECOGNIZED ACCREDITATION ORGANIZATION, SUCH AS THE NATIONAL FENESTRATION RATING COUNCIL, AND SHALL BE LABELED AND CERTIFIED BY THE MANUFACTURER.

© 2008 PRECISION PLANNING, INC. ALL RIGHTS RESERVED
THIS CONTRACT DOCUMENT IS COPYRIGHTED AND PROTECTED. REPRODUCTION, IN WHOLE OR IN PART, BY ANY MEANS OF SERVICE AND ARE THE SOLE PROPERTY OF PRECISION PLANNING, INC. UNLESS OTHERWISE AGREED TO, THEY SHALL NOT BE USED FOR ANY PURPOSE OTHER THAN THE MANNER NOR ARE THEY TO BE USED FOR ANY PURPOSE OTHER THAN THE PROJECT SPECIFICALLY INDICATED HEREON WITHOUT THE WRITTEN PERMISSION OF AND COMPENSATION TO PRECISION PLANNING, INC.

STATE OF GEORGIA 4-4-08 LANCE G. DAVIS CERTIFICATE NO. REGISTERED ARCHITECT

STAMP

Precision Planning, Inc.
planners, engineers, architects & surveyors
P.O. Box 2210
400 Pike Boulevard
Lawrenceville, GA 30046-2210
(770) 338-8000 or (770) 962-8000
(Fax) (770) 822-5990

PROJECT

JACKSON COUNTY JAIL
555 GENERAL JACKSON DRIVE
JEFFERSON, GEORGIA 30549

SHEET TITLE

SECURITY HOLLOW METAL ELEVATIONS

DESIGN	DRAWN	CHECKED
LGD	DMM	LGD

RELEASE

DATE	NO	DESCRIPTION
10/31/07		D.E.C./PLUMBING BID PACKAGE RELEASE
12/21/07	1	MECHANICAL/ELECTRICAL BID PACKAGE RELEASE
02/22/08	2	AS #004 REVISIONS TO DOORS / FRAMES AND WINDOWS
03/28/08	3	BALANCE OF REMAINING BID PACKAGES

03-28-08	DATE
A06136	PROJ. NUMBER
170A10.22.dwg	CAD FILE NAME
A10.22	FILE NUMBER

I:\DRAWINGS\06\06136\1540 Construction Documents\1364\10-22.dwg, 4/30/2009 8:27:39 AM, 7523s