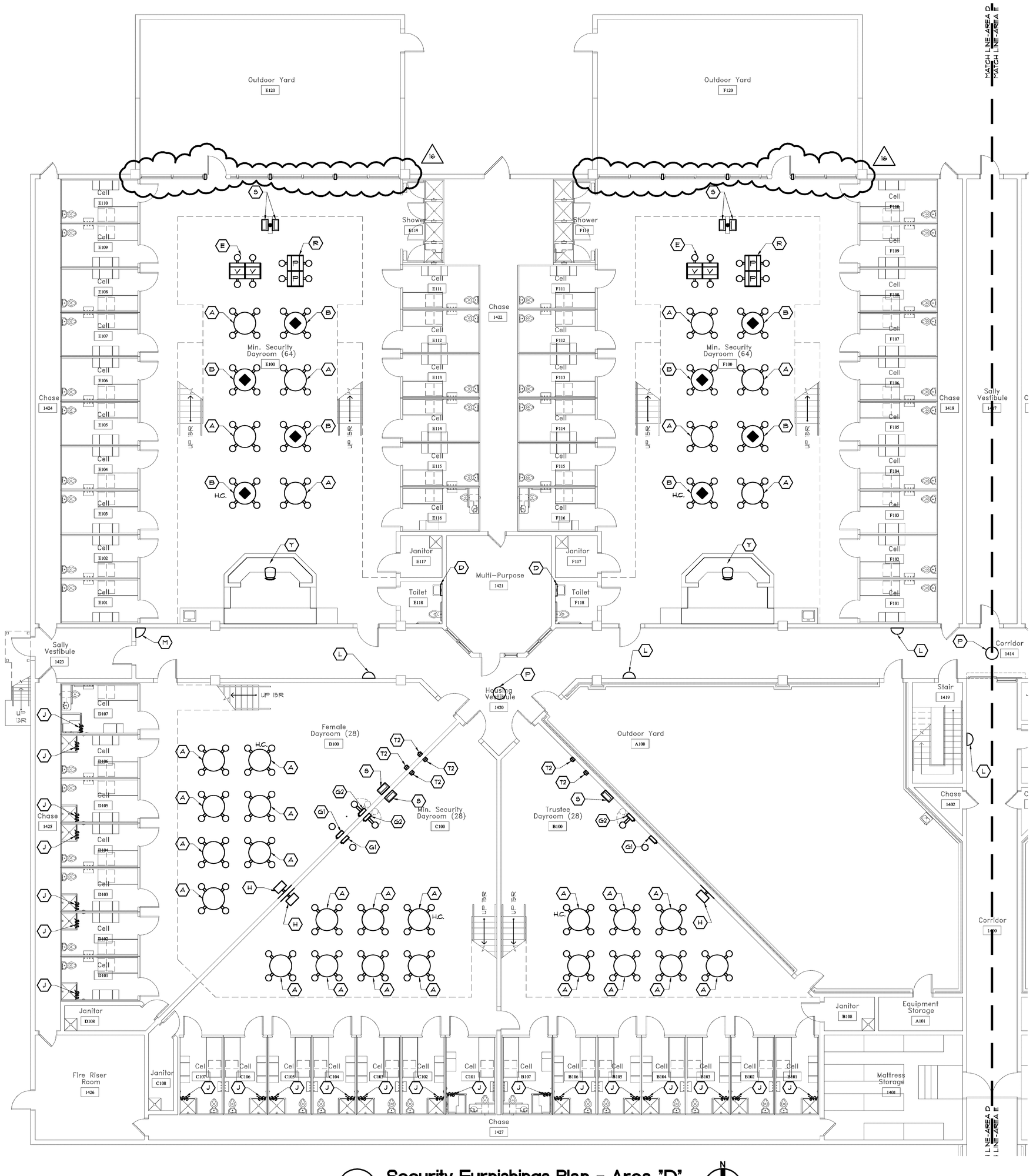

1 A10.3 **Security Furnishings Plan - Area "D"**

SCALE 1/X" = 1'-0"

Job North

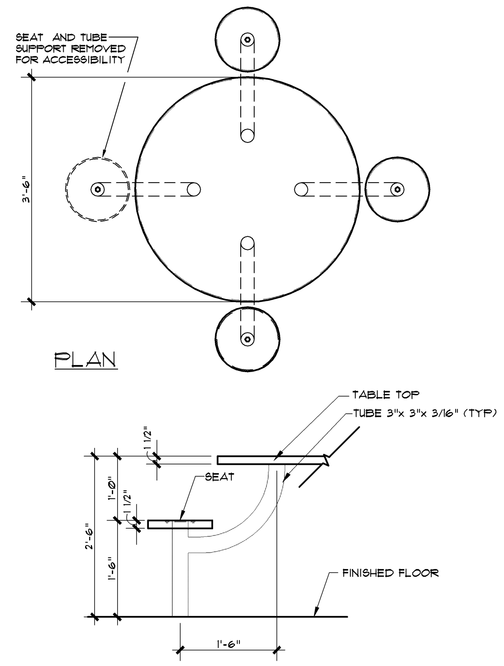

NOTES:

FOUR PERSON HEAVY-DUTY PEDESTAL TABLE - REFER TO SPECIFICATIONS FOR MATERIALS AND FINISHES

TABLE TO BE SECURELY FASTENED TO FLOOR

2 A10.3 **Accessible Security Table Detail**

SCALE 1 1/2" = 1'-0"

Security Furnishings Legend

KEY	DESCRIPTION
A	(4) FOUR PERSON ECONOMAX. DETENTION GRADE TABLE WITH STAINLESS STEEL QUIET CORE TOP BY NORIX. REFER TO SPECIFICATIONS. H.C. + ADA ACCESSIBLE SEAT - REFER TO DETAIL 2/A10.3
B	(4) FOUR PERSON ECONOMAX. DETENTION GRADE TABLE WITH STAINLESS STEEL QUIET CORE GAME TOP BY NORIX. REFER TO SPECIFICATIONS. H.C. + ADA ACCESSIBLE SEAT - REFER TO DETAIL 2/A10.3
C	UPPER AND LOWER HEAVY DUTY WALL MOUNTED BUNKS. LOWER BUNK TO INCLUDE (2) TWO DRAWERS. BUNKS TO BE FACTORY WELDED. PROVIDE STEEL EMBEDS AT MASONRY WALLS FOR BUNK ATTACHMENT. - REFER TO B/A10.8 AND SPECIFICATIONS
D	IRONMAN CELL MIRROR MODEL #2965-411 BY NORIX OR ARCHITECT APPROVED EQUAL.
E	(4) FOUR PERSON VIDEO VISITATION STATION. NORIX INTELE STATION FL-4 OR ARCHITECT APPROVED EQUAL.
F	WALL MOUNTED SEAT. REFER TO SPECIFICATIONS. H.C. + ADA ACCESSIBLE SWING SEAT
G1	VIDEO VISITATION STATION BY INTEGRATOR.COM WITH FLOOR MOUNTED STATIONARY STOOL- REFER TO SPECIFICATIONS
G2	ADA ACCESSIBLE VIDEO VISITATION STATION WITH WALL MOUNTED SWINGING SEAT- REFER TO SPECIFICATIONS
G3	VIDEO VISITATION STATION. BY INTEGRATOR .COM- REFER TO SPECIFICATIONS
H	HEAVY-DUTY TV BRACKET, WALL MOUNTED WITH SWIVEL ARM AND TILTING TV TRAY. REFER TO SPECIFICATIONS. - MOUNTED AT 8'-5" A.F.F. - REFER TO 2/A10.4
J	SECURITY SHOWER CURTAIN AND SHOWER ROD - REFER TO SPECIFICATIONS
K	SURFACE MOUNTED (9) NINE COMPARTMENT HANDGUN LOCKER - REFER TO SPECIFICATIONS.
L	HD24 DURAVISION HALF DOME SECURITY QUALITY MIRROR BY NORIX OR ARCHITECT APPROVED EQUAL.
M	QD18 DURAVISION QUARTER DOME SECURITY QUALITY MIRROR BY NORIX OR ARCHITECT APPROVED EQUAL.
N	36" FLEXI-VIEW CONVEX MIRROR POLYCARBONATE WITH MOUNTING BRACKETS OR ARCHITECT APPROVED EQUAL.
P	24" DIAMETER DURAVISION FULL DOME SECURITY QUALITY MIRROR BY NORIX OR ARCHITECT APPROVED EQUAL.
Q	HANDCUFF RINGS SPACED AT 24" O.C. MOUNTED ON FRONT OF BENCH - REFER TO 2/A10.2 AND SPECIFICATIONS
Q1	HANDCUFF RING MOUNTED TO WALL AT 48" A.F.F. -REFER TO SPECIFICATIONS.
R	(4) FOUR PERSON INMATE PHONE SYSTEM STATION. NORIX PL-4-P
S	WALL MOUNTED COMMISSARY KIOSK- OWNER FURNISHED AND INSTALLED
S2	FLOOR MOUNTED COMMISSARY KIOSK -OWNER FURNISHED AND INSTALLED
T	WALL MOUNTED PUBLIC PAY PHONE
T1	DIRECT VISITATION PHONE SYSTEM
T2	INMATE PHONE SYSTEM
U	WALL MOUNTED (2) PERSON VIDEO VISITATION STATION BY NORIX. H.C. + ADA ACCESSIBLE - REMOVE (1) ONE SEAT
V	EVIDENCE PASS-THRU LOCKERS BY D&M LAW EQUIPMENT PRODUCTS- REFER TO SPECIFICATIONS
W	LOCKABLE 14"x14"x14" PACKAGE PASS- THRU BY NATIONAL BULLET PROOF OR ARCHITECT APPROVED EQUAL.
W2	BULLET RESISTANT TRANSACTION DRAWER (NO. 1124-SCL) CREATIVE INDUSTRIES, INC. OR ARCHITECT APPROVED EQUAL
W3	FASPORT MULTI-PURPOSE ACCESS PORT BY NORIX OR ARCHITECT APPROVED EQUAL
W4	INTERIOR GRADE BULLET RESISTANT STAINLESS STEEL TALK THRU NO. 9-D BY CREATIVE INDUSTRIES, INC. OR ARCHITECT APPROVED EQUAL
X	HEAVY DUTY TV SHELF WELDED TO MEZZANINE STEEL FRAME - REFER TO 2/A10.5 FOR DETAIL.
Y	COMMANDMASTER SUPERVISOR CHAIR WITH NOCERUS HIDE BY NORIX OR ARCHITECT APPROVED EQUAL.
Z	8 PERSON TABLE BY NORIX
Z1	WALL SHELF WITH COLLAPSIBLE HOOKS. REFER TO SPECIFICATIONS

Notes

1. ATTACHMENT OF ALL BOLTED ITEMS SHALL BE WITH SECURITY BOLT ANCHORS.
2. OBTAIN OWNER APPROVAL OF CONVEX MIRROR LOCATIONS PRIOR TO INSTALLATION.
3. CONTRACTOR SHALL COORDINATE TV BRACKET TYPE LOCATED IN JAIL LOBBY 100I WITH OWNER'S TV.
4. INMATE PHONE SYSTEM AND DIRECT VISITATION PHONE SYSTEM SHALL BE CONTROLLED BY SECURITY ELECTRONICS SYSTEM.

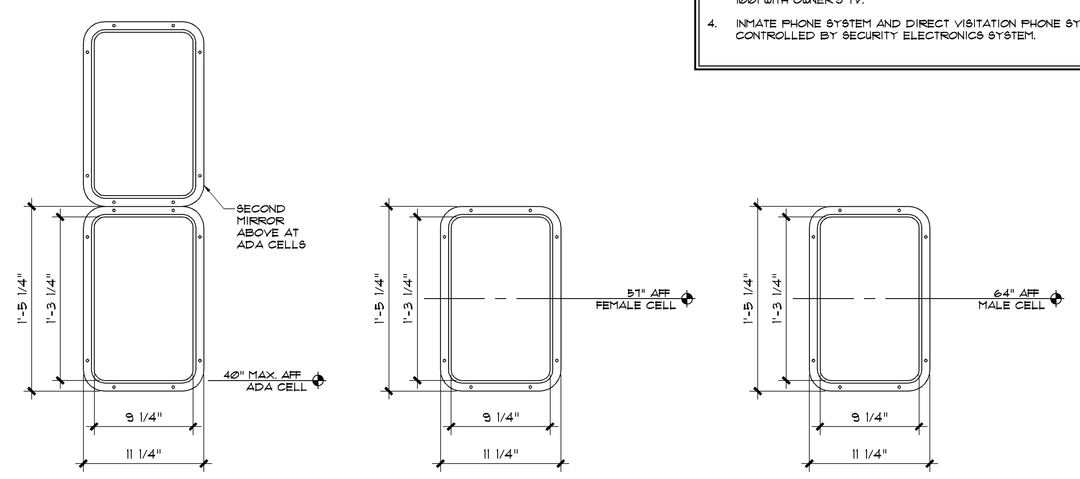

3 A10.3 **Mirror Mounting Heights Diagram**

SCALE 1 1/2" = 1'-0"

Key Plan

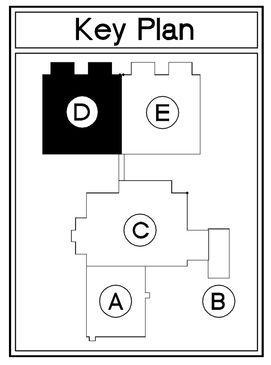

© 2008 PRECISION PLANNING, INC. ALL RIGHTS RESERVED

THESE CONSTRUCTION DOCUMENTS, AND PRINTED REPRODUCTIONS, AS INSTRUMENTS OF PROFESSIONAL SERVICE, ARE THE SOLE PROPERTY OF PRECISION PLANNING, INC. UNLESS OTHERWISE AGREED TO, THEY SHALL NOT BE USED BY OWNER OR ANY OTHER PERSON OR MANNER NOR ARE THEY TO BE USED FOR ANY PURPOSE OTHER THAN THE PROJECT SPECIFICALLY INDICATED HEREIN WITHOUT THE WRITTEN PERMISSION OF CORPORATION OF PRECISION PLANNING, INC.

STAMP

Precision Planning, Inc.
planners, engineers, architects & surveyors
P.O. Box 2210
400 Pike Boulevard
Lawrenceville, GA 30046-2210
(770) 338-8000 or (770) 962-8000
(Fax) (770) 822-5990

PROJECT

JACKSON COUNTY JAIL
555 GENERAL JACKSON DRIVE
JEFFERSON, GEORGIA 30549

SHEET TITLE

SECURITY FURNISHINGS PLAN AREA D

DESIGN	DRAWN	CHECKED
LGD	BKS	LGD

RELEASE

DATE	NO	DESCRIPTION
10/31/07		D.E.C./PLUMBING BID PACKAGE RELEASE
11/09/07	A	D.E.C./PLUMBING BID PACKAGE, ADDENDUM #1
12/21/07		MECHANICAL/ELECTRICAL BID PACKAGE RELEASE
03/28/09	B	BALANCE OF REMAINING BID PACKAGES

DATE	PROJ. NUMBER	CAD FILE NAME	FILE NUMBER
03-28-08	A06136	136A10-3.dwg	

A10.3

I:\DRAWINGS\06\06136\1540 Construction Documents\136A10-3.dwg, 4/30/2009 8:26:48 AM, 750ds