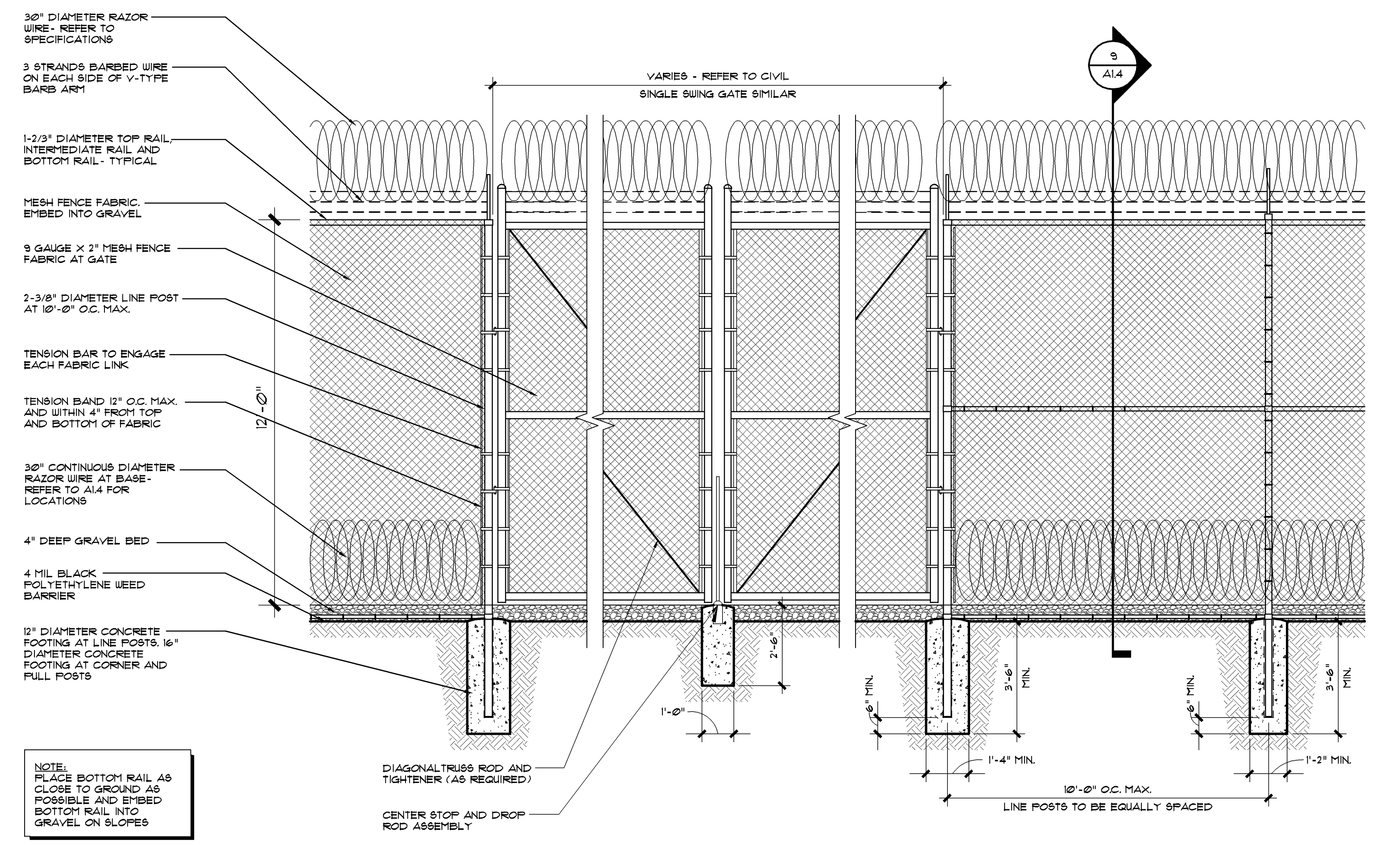

1 / A1.5 **Security Fence Elevation**

SCALE: 3/8" = 1'-0"

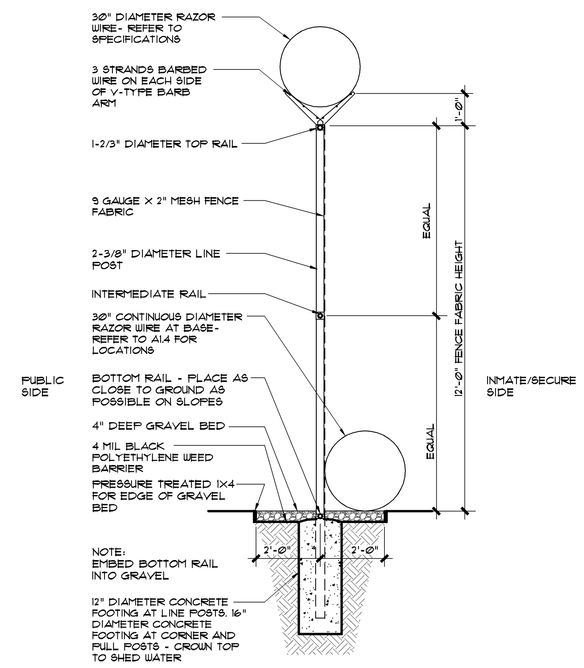

2 / A1.5 **Security Fence Section**

SCALE: 3/8" = 1'-0"

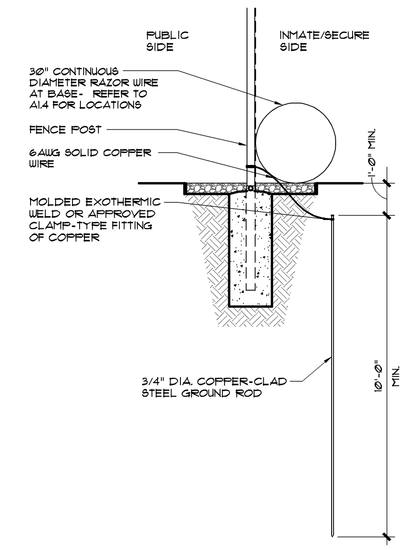

3 / A1.5 **Grounding Detail**

SCALE 3/8" = 1'-0"

Security Fence Notes

1. WIRE TIES, RAILS, POSTS AND BRACES SHALL BE CONSTRUCTED ON THE SECURE SIDE OF THE FENCE ALIGNMENT. CHAIN-LINK FABRIC SHALL BE PLACED ON THE PUBLIC SIDE OF THE SECURE AREA.
2. 9-GAUGE GALVANIZED STEEL TIE WIRES SHALL BE USED FOR FASTENING THE FENCE FABRIC TO FENCE POSTS AND RAILS. SPACING SHALL BE AT 12" O.C. AND 4" MAX. FROM TOP AND BOTTOM OF FABRIC. ENDS SHALL BE TWISTED A MINIMUM OF THREE (3) FULL TURNS.
3. POSTS FOR FENCE AND GATE SHALL BE GALVANIZED. RAILS FOR FENCE SHALL BE GALVANIZED. CHAIN-LINK FABRIC AND ASSOCIATED ITEMS SHALL BE GALVANIZED. GATE SHALL BE MILL FINISH ALUMINUM.
4. PERIMETER FENCE SHALL HAVE RAZOR WIRE AT BASE ON THE SECURE SIDE OF THE FENCE AT ALL LOCATIONS.
5. ALL SECURITY FENCING AND ASSOCIATED ITEMS SHALL BE PROVIDED BY AND INSTALLED BY THE OWNER UNLESS INDICATED OTHERWISE.
6. CANTELEVER SLIDEGATES, GATE OPERATORS, AND ADJACENT CONNECTED SECURITY FENCING SHALL BE PROVIDED BY CONTRACTOR. REFER TO ENLARGED PLANS FOR EXTENTS OF CONTRACTOR PROVIDED SECURITY FENCING.

SLIDE-GATE POSTS	TUBULAR ROUND	4.00" O.D.
CORNER, END AND PULL POSTS	TUBULAR ROUND	2.875" O.D.
LINE POSTS	TUBULAR ROUND	2.375" O.D.
TOP, BOTTOM AND INTERMEDIATE RAILS	TUBULAR ROUND	1.66" O.D.

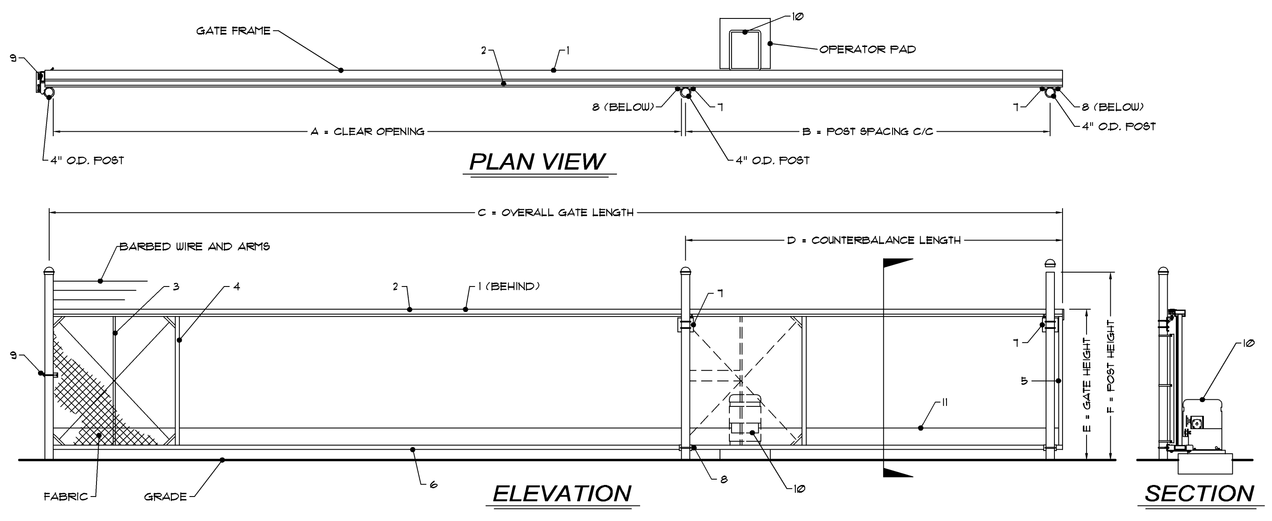

4 / A1.5 **Security Gate Plan, Elevation and Sections**

NOT TO SCALE

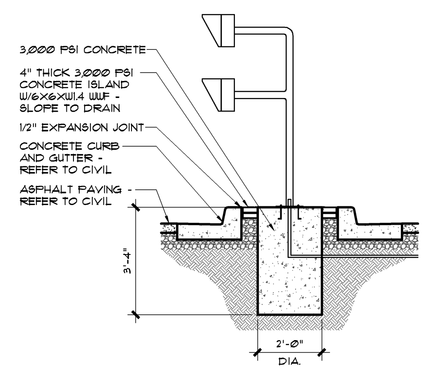

6 / A1.5 **Call Box Island Section**

SCALE 3/8" = 1'-0"

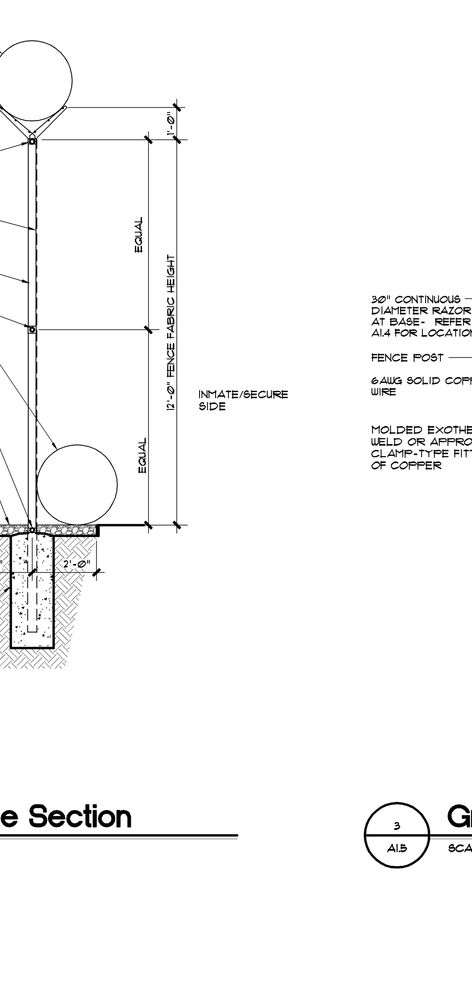

7 / A1.5 **Pole Mounted Camera**

SCALE 3/8" = 1'-0"

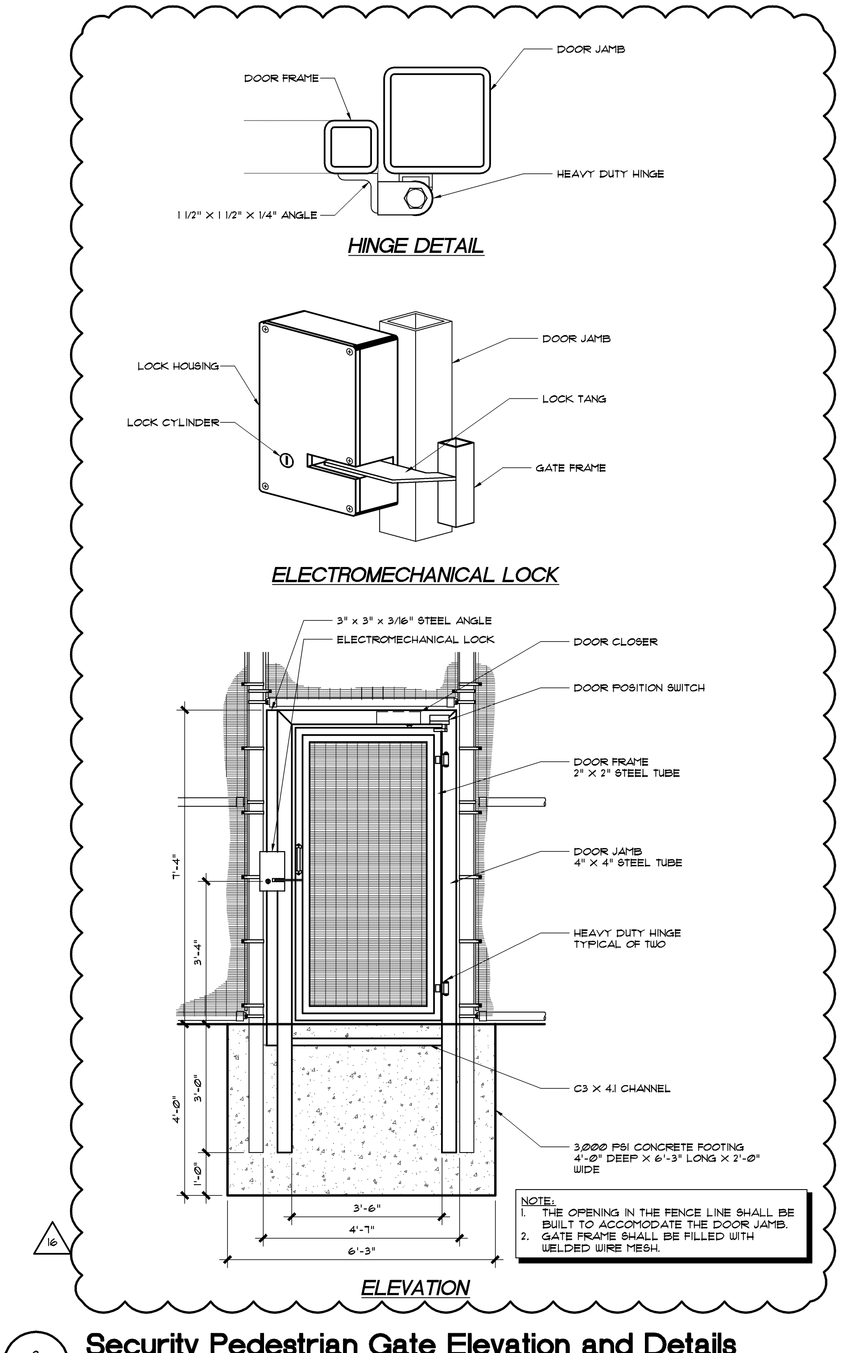

8 / A1.5 **Security Pedestrian Gate Elevation and Details**

NOT TO SCALE

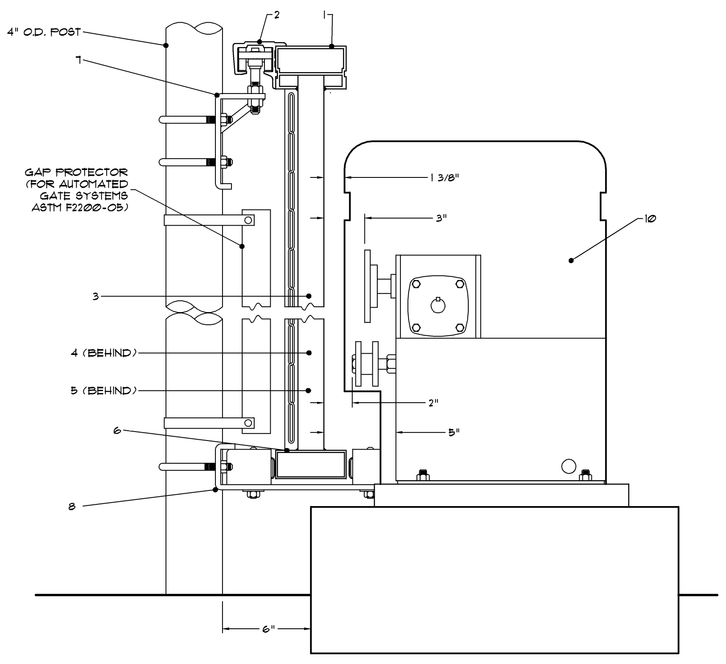

Legend

MARK	DESCRIPTION	NOTES:
1	TOP PRIMARY MEMBER	
2	STANDARD TRACK	
3	1" x 2" ALUM. TUBE	CENTERED BETWEEN 2x2's
4	2" x 2" ALUM. TUBE	
5	STANDARD PRIMARY	TYP. AT ENDS OF GATE FRAME
6	2" x 5" ALUM. TUBE	
7	HANGER ASSEMBLY	2 REQUIRED
8	BOTTOM GUIDE ASSEMBLY	2 REQUIRED
9	CATCH ASSEMBLY	1 REQUIRED
10	TYM-1100 GATE OPERATOR	
11	DRIVE CHAIN	

Critical Dimension Chart

MARK	DESCRIPTION	FORMULA	DIM.
A	CLEAR OPENING	A	-
B	COUNTERBALANCE POST SPACING C/C	(A/2)+11"	-
C	OVERALL GATE LENGTH	A x 1.5	-
D	COUNTERBALANCE LENGTH	A x 0.5	-
E	NOMINAL GATE HEIGHT	E	-
F	POST HEIGHT (W BARB ARMS)	E + 1'-6"	-
G	FABRIC HEIGHT	E - 1'-0"	-

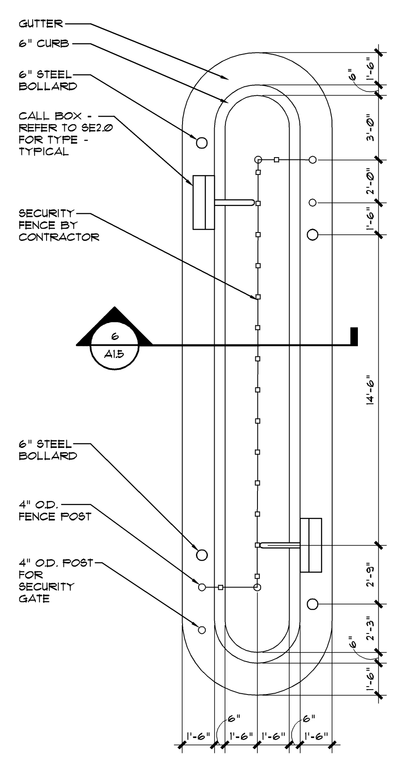

5 / A1.5 **Call Box Island Plan**

SCALE 1/4" = 1'-0"

© 2008 PRECISION PLANNING, INC. ALL RIGHTS RESERVED
THESE CONTRACT DOCUMENTS, INCLUDING BUT NOT LIMITED TO, ARCHITECTURAL WORKS, ARE THE PROPERTY OF PRECISION PLANNING, INC. (PPI) AND ARE THE SALE PROPERTY OF PRECISION PLANNING, INC. (PPI) UNLESS OTHERWISE AGREED TO. THEY SHALL NOT BE REPRODUCED, PUBLISHED OR USED IN ANY MANNER NOR ARE THEY TO BE USED FOR ANY PURPOSE OTHER THAN THE PROJECT SPECIFICALLY INDICATED HEREON WITHOUT THE EXPRESS WRITTEN PERMISSION OF CORPORATION TO PRECISION PLANNING, INC.

STATE OF GEORGIA — 4-4-08 — LANCE G. DAVIS — REGISTERED ARCHITECT

STAMP

Precision Planning, Inc.
planners, engineers, architects & surveyors
P.O. Box 2210
400 Pike Boulevard
Lawrenceville, GA 30046-2210
(770) 338-8000 or (770) 962-8000
(Fax) (770) 822-5990

PROJECT

JACKSON COUNTY JAIL
555 GENERAL JACKSON DRIVE
JEFFERSON, GEORGIA 30549

SHEET TITLE

SECURITY FENCE DETAILS

DESIGN	DRAWN	CHECKED
LGD	CAC	LGD

RELEASE

DATE	NO	DESCRIPTION
12/21/07		MECHANICAL/ELECTRICAL BID PACKAGE RELEASE
03/28/08	1	BALANCE OF REMAINING BID PACKAGES

DATE	PROJ. NUMBER	CAD FILE NAME	FILE NUMBER
03-28-08	A06136	136-A1.5.dwg	

A1.5

1:\DRAWINGS\06\06136\136A1-5.dwg, 4/30/2009 7:58:50 AM, 752ks