STATE	FEDERAL PROJECT NO.	SHEET	TOTAL SHEETS
N.J.			

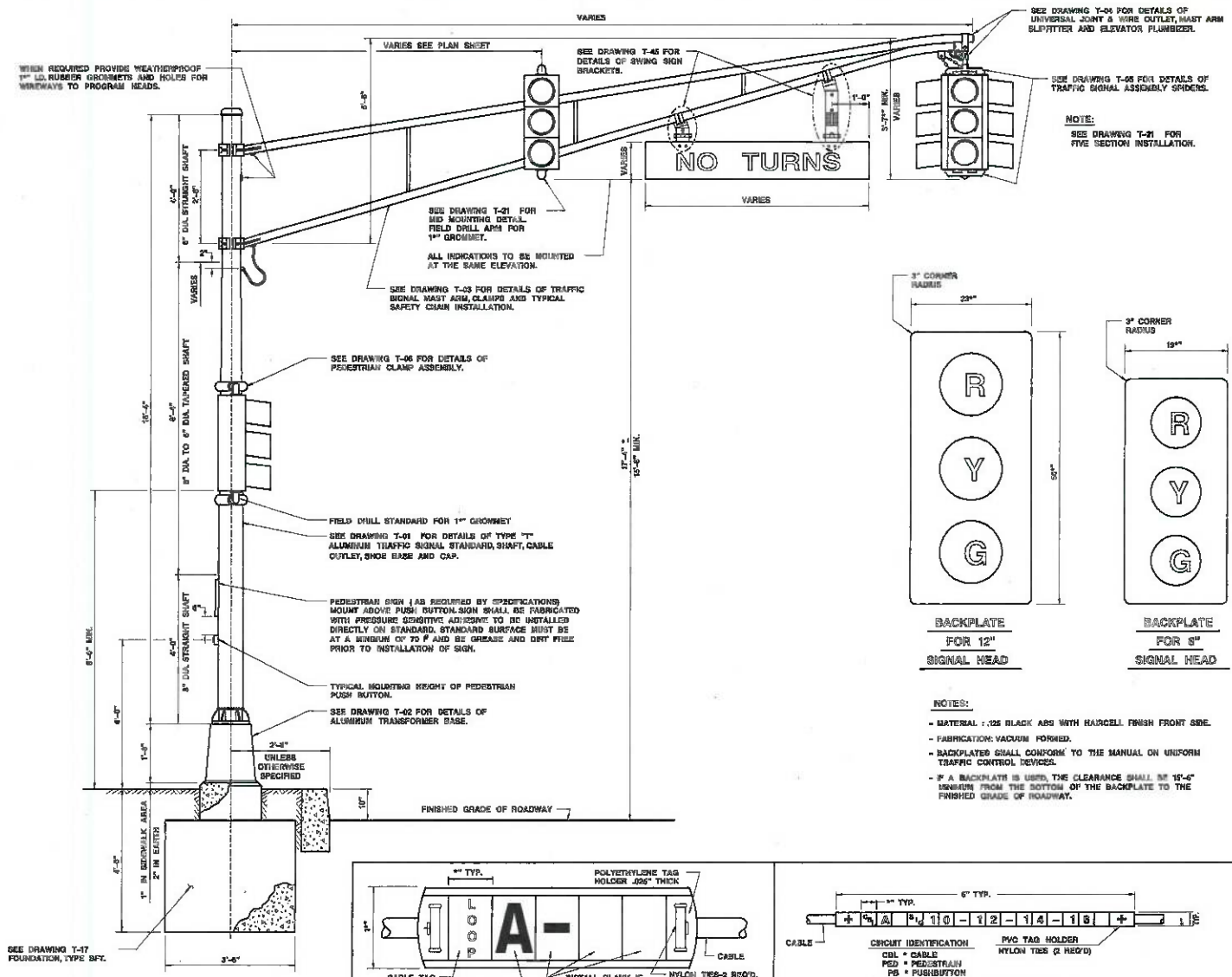

TYPICAL INSTALLATION

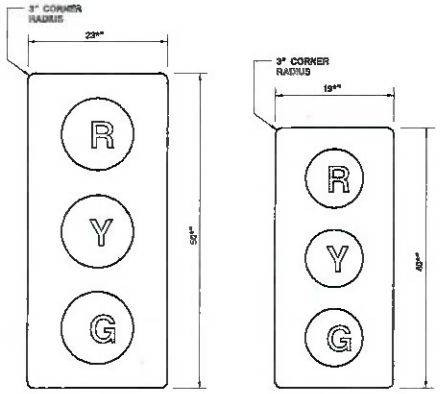

BACKPLATE FOR 12" SIGNAL HEAD

BACKPLATE FOR 8" SIGNAL HEAD

NOTES:

- MATERIAL : .125 BLACK ABS WITH HARCELL FINISH FRONT SIDE.
- FABRICATION: VACUUM FORMED.
- BACKPLATES SHALL CONFORM TO THE MANUAL ON UNIFORM TRAFFIC CONTROL DEVICES.
- IF A BACKPLATE IS USED, THE CLEARANCE SHALL BE 15'-6" MINIMUM FROM THE BOTTOM OF THE BACKPLATE TO THE FINISHED GRADE OF ROADWAY.

(TAG LETTERS SHALL BE BLACK ON YELLOW)

CABLE IDENTIFICATION TAG DETAIL

(LOOP DETECTOR)

(TAG LETTERS SHALL BE BLACK ON YELLOW)

CABLE IDENTIFICATION TAG DETAIL

(TRAFFIC SIGNAL)

NEW JERSEY DEPARTMENT OF TRANSPORTATION

ELECTRICAL DETAILS

N.T.S.

TYPICAL TRAFFIC SIGNAL INSTALLATION

T-1607

SKETCH #1

THIS DRAWING OR SPECIFICATION IS CONFIDENTIAL AND PROPRIETARY TO NATIONAL SIGN AND SIGNAL INC. AND IT MAY NOT BE REPRODUCED, USED, OR DISCLOSED TO OTHERS WITHOUT THE WRITTEN CONSENT OF NATIONAL SIGN AND SIGNAL INC.

LTR	REVISIONS	DATE

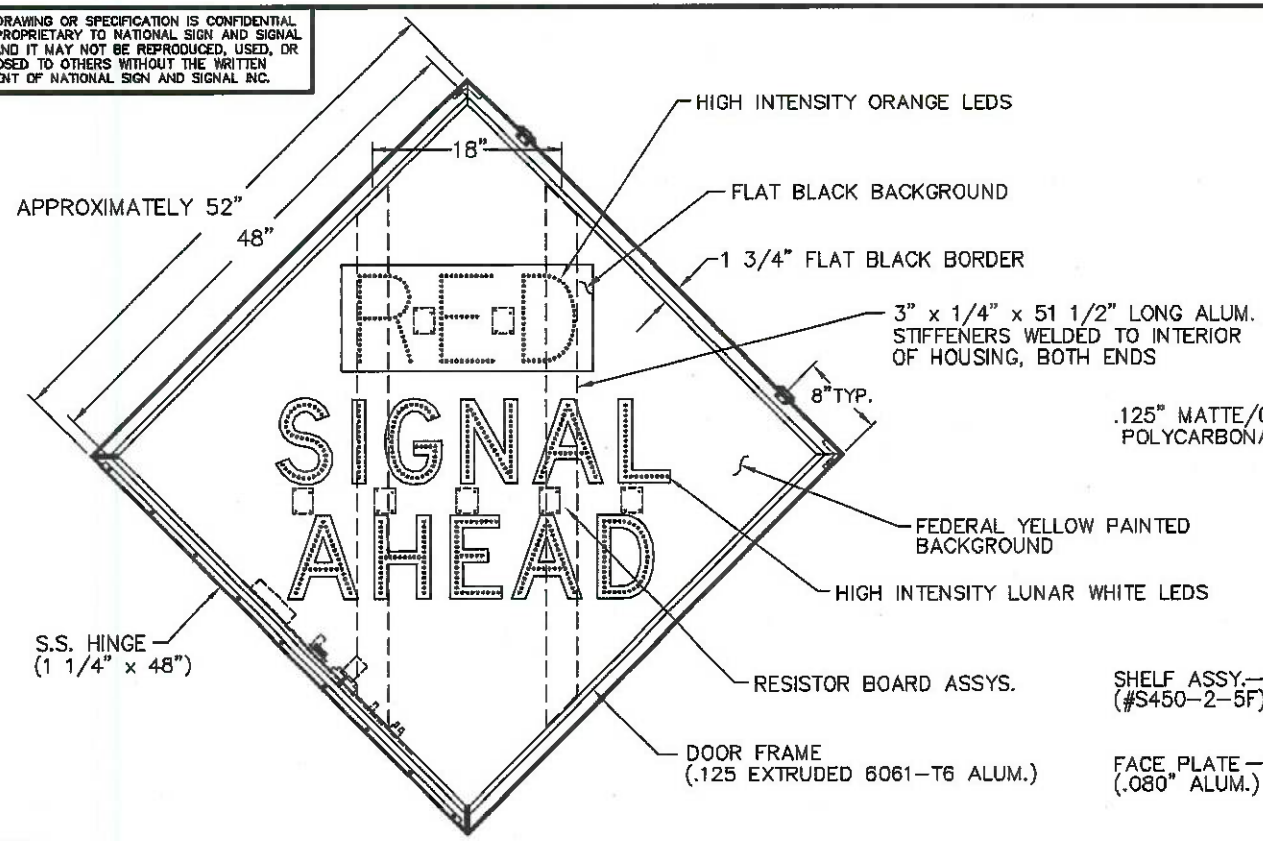

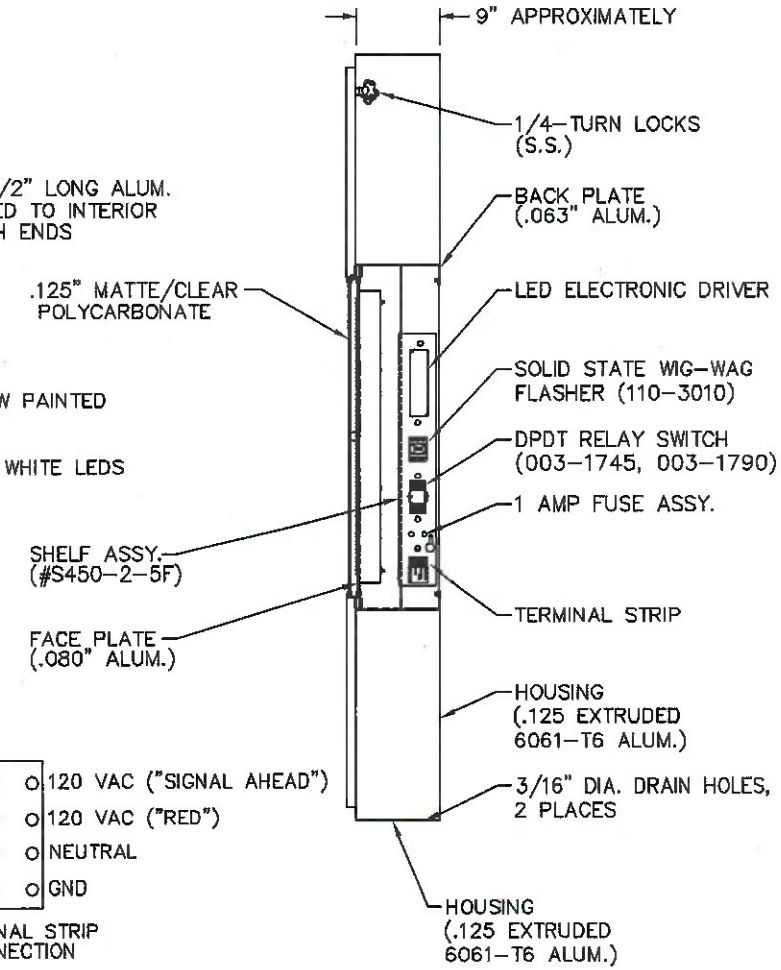

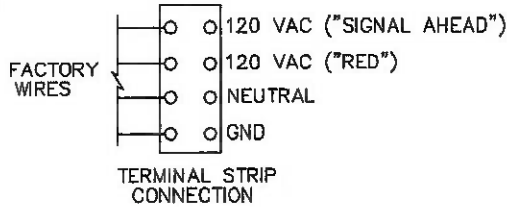

NOTES:

1. MESSAGE SHALL BE FORMED BY SINGLE ROWS OF HIGH INTENSITY ORANGE AND WHITE LEDS SPACED AT 1/2" O.C. (NOMINAL).
2. "RED" PART OF LEGEND SHALL BE 8" LETTERS FORMED BY ROWS OF ORANGE LEDs AND SHALL COMPLETELY BLANK-OUT WHEN NOT ACTIVATED.
3. "SIGNAL AHEAD" PART OF LEGEND SHALL BE 8" SERIES 'D' BLACK LETTERS WITH ROWS WHITE LEDs PLACED ALONG THE CENTER LINES OF EACH LETTER AND SHALL BE CONTINOUSLY ILLUMINATED FOR ENHANCED LEGIBILITY.
4. LEDS SHALL BE PROTECTED BY A MATTE/CLEAR POLYCARBONATE LENS AND SHALL MINIMIZE ANY UNWANTED REFLECTIONS.
5. SIGN HOUSING SHALL BE FIELD DRILLED FOR POWER ENTRY.
6. HOUSING SHALL MEET THE REQUIREMENTS OF NEMA TYPE 4 ENCLOSURES.
7. SIGN SHALL BE EQUIPPED WITH TWO (2) 3/16" DIA. WEEP HOLES LOCATED IN THE LOWER CORNER OF THE HOUSING.
8. ENTIRE HOUSING ASSY. SHALL BE ACID ETCHED AND PAINTED WITH TWO COATS OF ZINC-CHROMATE PRIMER. DOOR FRAME, FACE PLATE, AND INTERIOR OF HOUSING SHALL BE PAINTED WITH TWO COATS OF HIGH QUALITY FLAT BLACK ENAMEL. EXTERIOR OF HOUSING SHALL BE PAINTED WITH TWO COATS OF HIGH QUALITY FEDERAL YELLOW ENAMEL.
9. APPROXIMATE WEIGHT OF SIGN ASSY. – 140#
10. IN THE ABSENCE OF AN ACTUATION, THE "SIGNAL AHEAD" PORTION SHALL BE CONTINUOUSLY ILLUMINATED AND THE "RED" PORTION SHALL BE DARK. UPON ACTUATION OF THE RED THE "SIGNAL AHEAD" SHALL FLASH ALTERNATELY PRIOR TO THE PARENT YELLOW PHASE AND TERMINATE AT THE BEGINNING OF THE SIGNS PARENT GREEN PHASE.
11. ALL HARDWARE AND HINGE SHALL BE STAINLESS STEEL.

UNLESS OTHERWISE SPECIFIED, ALL DIMENSIONS HAVE A TOLERANCE OF: ± 1/4"	NATIONAL SIGN AND SIGNAL 301 S. ARMSTRONG RD BATTLE CREEK, MI 49037			
DRAWN BY: P.H.	TITLE MODEL #48LEDRSA-NJ (REPLACES #48LEDRSA4) 48" x 48" TWO MESSAGE / 1-WAY LED BLANK-OUT WARNING SIGN			
DATE: 07/24/15				
OUR JOB NO. N/A				
CUSTOMER/JOB NO.: NEW JERSEY D.O.T.	SCALE 1:18	REVISION	SIZE A	DRAWING NO. S615-6-4

SKETCH #2

THIS DRAWING OR SPECIFICATION IS CONFIDENTIAL AND PROPRIETARY TO NATIONAL SIGN AND SIGNAL INC. AND IT MAY NOT BE REPRODUCED, USED, OR DISCLOSED TO OTHERS WITHOUT THE WRITTEN CONSENT OF NATIONAL SIGN AND SIGNAL INC.

LTR	REVISIONS	DATE

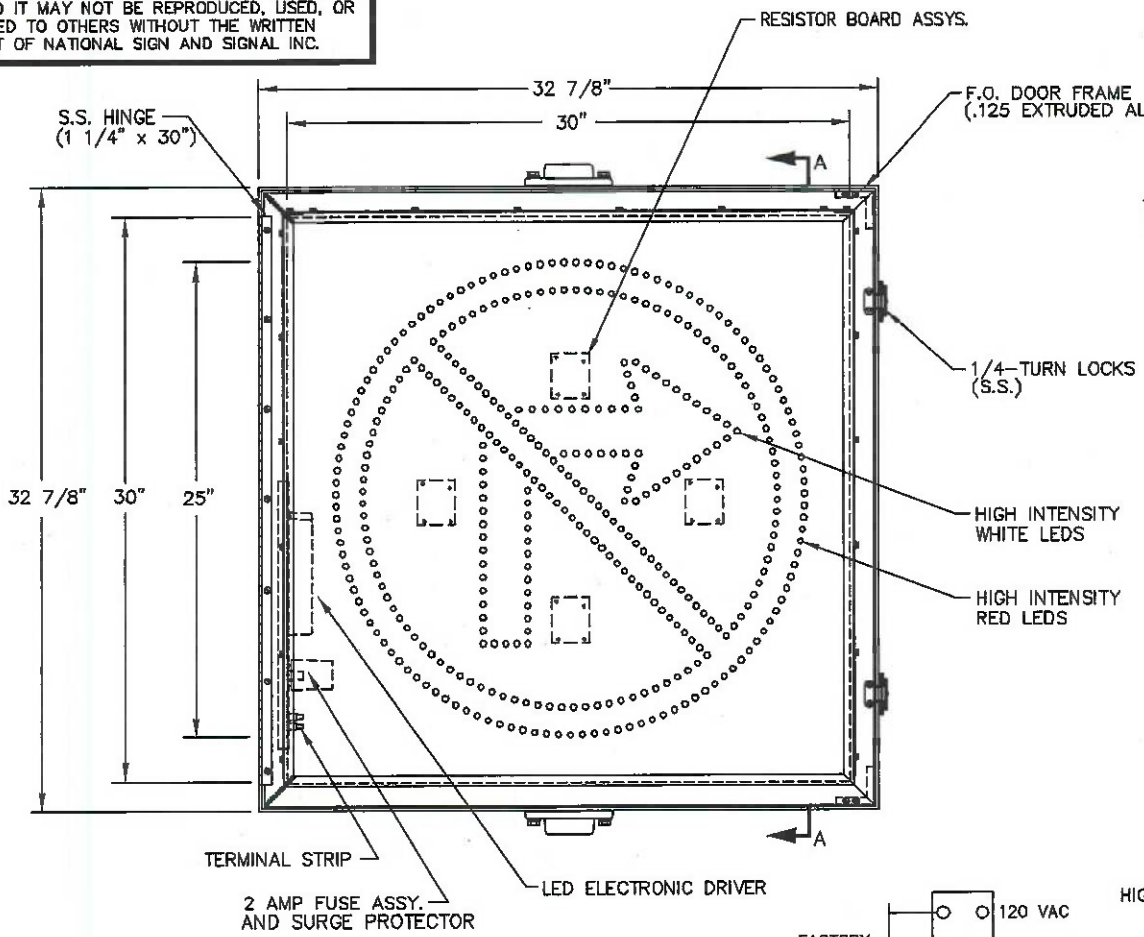

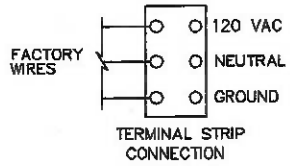

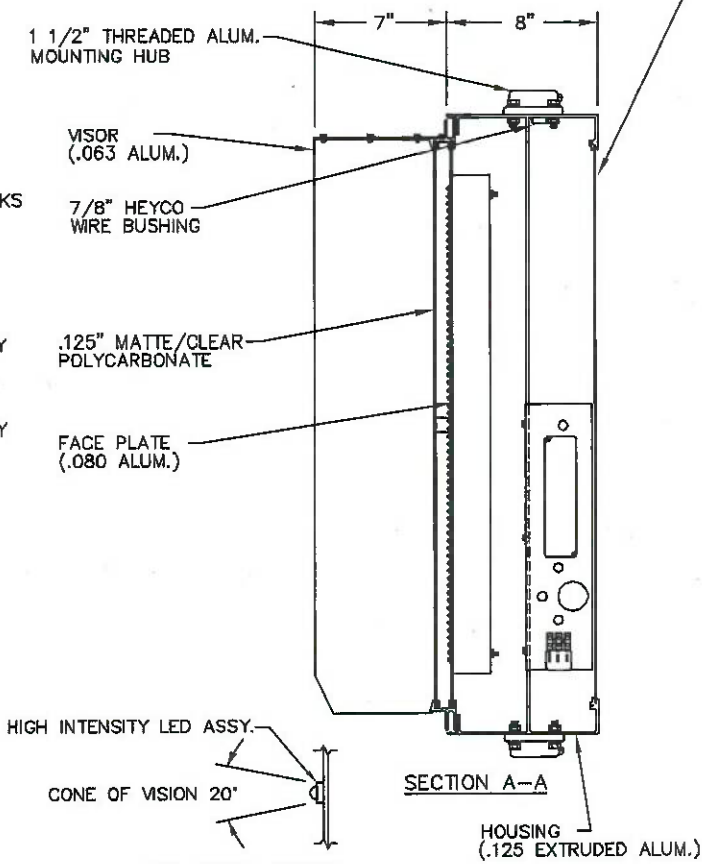

SECTION A–A

LED ASSY. DETAIL
(NOT TO SCALE)

NOTES:

1. MESSAGE SHALL BE FORMED BY ROWS OF HIGH INTENSITY RED & WHITE LEDS. DISPLAY SHALL HAVE GRAPHIC CHARACTERISTICS OF MUTCD LEGEND R3–1.
2. MESSAGE COLORS: CIRCLE & DIAGONAL – RED ILLUMINATION.
   ARROW – WHITE ILLUMINATION.
3. MESSAGE SHALL COMPLETELY BLANK OUT WHEN NOT ENERGIZED.
4. MESSAGE SHALL BE VISIBLE ANYWHERE WITHIN A 20 DEG. CONE CENTERED ABOUT THE OPTIC AXIS.
5. LEDS SHALL BE PROTECTED BY A MATTE/CLEAR POLYCARBONATE LENS AND SHALL MINIMIZE ANY UNWANTED REFLECTIONS.
6. 7/8" DIA. WIRE ENTRY HOLE PROVIDED THROUGH TOP MOUNTING HUB.
7. HOUSING SHALL MEET THE REQUIREMENTS OF NEMA 4X ENCLOSURES.
8. SIGN SHALL BE EQUIPPED WITH FOUR (4) 3/16" DIA. WEEP HOLES LOCATED IN THE LOWER CORNERS OF THE HOUSING.
9. EXTERIOR OF HOUSING SHALL BE PAINTED FEDERAL YELLOW ENAMEL FINISH.
10. APPROXIMATE WEIGHT OF SIGN ASSY. – 80#

UNLESS OTHERWISE SPECIFIED, ALL DIMENSIONS HAVE A TOLERANCE OF ± 1/4"	NATIONAL SIGN AND SIGNAL 301 S. ARMSTRONG RD BATTLE CREEK, MI 49037			
DRAWN BY: P.H.	TITLE MODEL #3030LEDR31–NJ 30" x 30" 1 MESSAGE / 1–WAY LED BLANK–OUT SIGN: R3–1			
DATE: 02/25/19				
OUR JOB NO. N/A				
CUSTOMER/JOB NO.: NEW JERSEY D.O.T.	SCALE 1:10	REVISION	SIZE A	DRAWING NO. S449LED–NJ

SKETCH #3

THIS DRAWING OR SPECIFICATION IS CONFIDENTIAL AND PROPRIETARY TO NATIONAL SIGN AND SIGNAL INC. AND IT MAY NOT BE REPRODUCED, USED, OR DISCLOSED TO OTHERS WITHOUT THE WRITTEN CONSENT OF NATIONAL SIGN AND SIGNAL INC.

LTR	REVISIONS	DATE

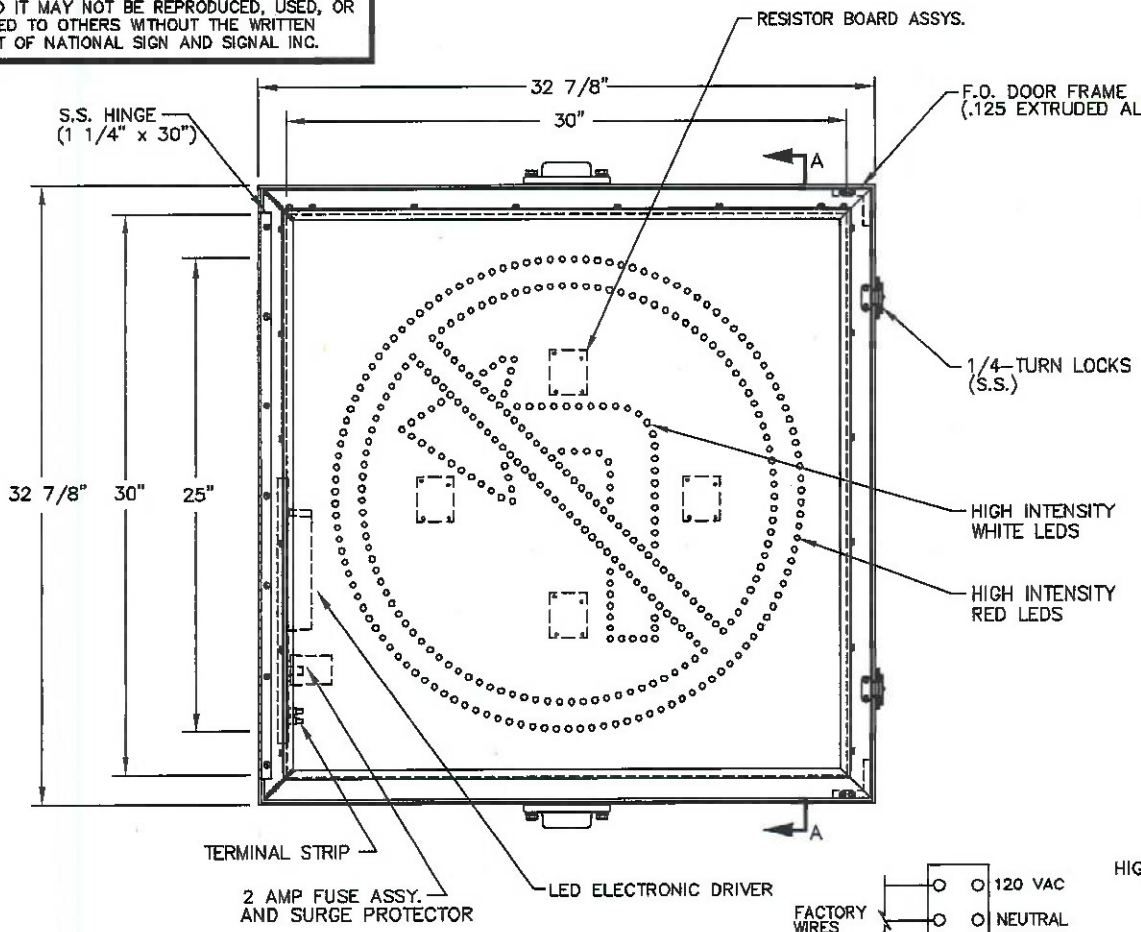

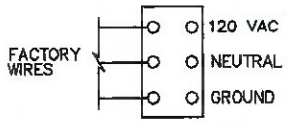

TERMINAL STRIP
CONNECTION

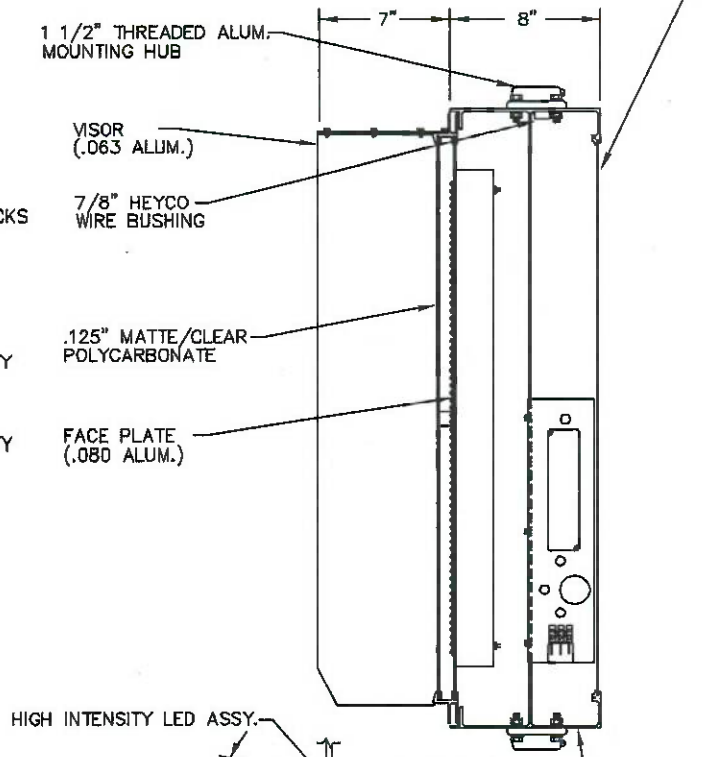

SECTION A–A

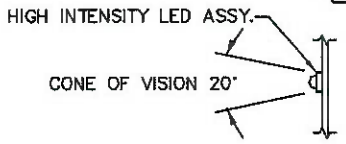

LED ASSY. DETAIL
(NOT TO SCALE)

NOTES:

1. MESSAGE SHALL BE FORMED BY ROWS OF HIGH INTENSITY RED & WHITE LEDS. DISPLAY SHALL HAVE GRAPHIC CHARACTERISTICS OF MUTCD LEGEND R3–2.
2. MESSAGE COLORS: CIRCLE & DIAGONAL – RED ILLUMINATION. ARROW – WHITE ILLUMINATION.
3. MESSAGE SHALL COMPLETELY BLANK OUT WHEN NOT ENERGIZED.
4. MESSAGE SHALL BE VISIBLE ANYWHERE WITHIN A 20 DEG. CONE CENTERED ABOUT THE OPTIC AXIS.
5. LEDS SHALL BE PROTECTED BY A MATTE/CLEAR POLYCARBONATE LENS AND SHALL MINIMIZE ANY UNWANTED REFLECTIONS.
6. 7/8" DIA. WIRE ENTRY HOLE PROVIDED THROUGH TOP MOUNTING HUB.
7. HOUSING SHALL MEET THE REQUIREMENTS OF NEMA 4X ENCLOSURES.
8. SIGN SHALL BE EQUIPPED WITH FOUR (4) 3/16" DIA. WEEP HOLES LOCATED IN THE LOWER CORNERS OF THE HOUSING.
9. EXTERIOR OF HOUSING SHALL BE PAINTED FEDERAL YELLOW ENAMEL FINISH.
10. APPROXIMATE WEIGHT OF SIGN ASSY. – 80#

UNLESS OTHERWISE SPECIFIED, ALL DIMENSIONS HAVE A TOLERANCE OF ± 1/4"	NATIONAL SIGN AND SIGNAL 301 S. ARMSTRONG RD BATTLE CREEK, MI 49037			
DRAWN BY: P.H.	TITLE MODEL #3030LEDR32–NJ 30" x 30" 1 MESSAGE / 1–WAY LED BLANK–OUT SIGN: R3–2			
DATE: 02/25/19				
OUR JOB NO. N/A				
CUSTOMER/JOB NO.: NEW JERSEY D.O.T.	SCALE 1:10	REVISION	SIZE A	DRAWING NO. S449ALED–NJ

SKETCH #4

THIS DRAWING OR SPECIFICATION IS CONFIDENTIAL AND PROPRIETARY TO NATIONAL SIGN AND SIGNAL INC. AND IT MAY NOT BE REPRODUCED, USED, OR DISCLOSED TO OTHERS WITHOUT THE WRITTEN CONSENT OF NATIONAL SIGN AND SIGNAL INC.

LTR	REVISIONS	DATE

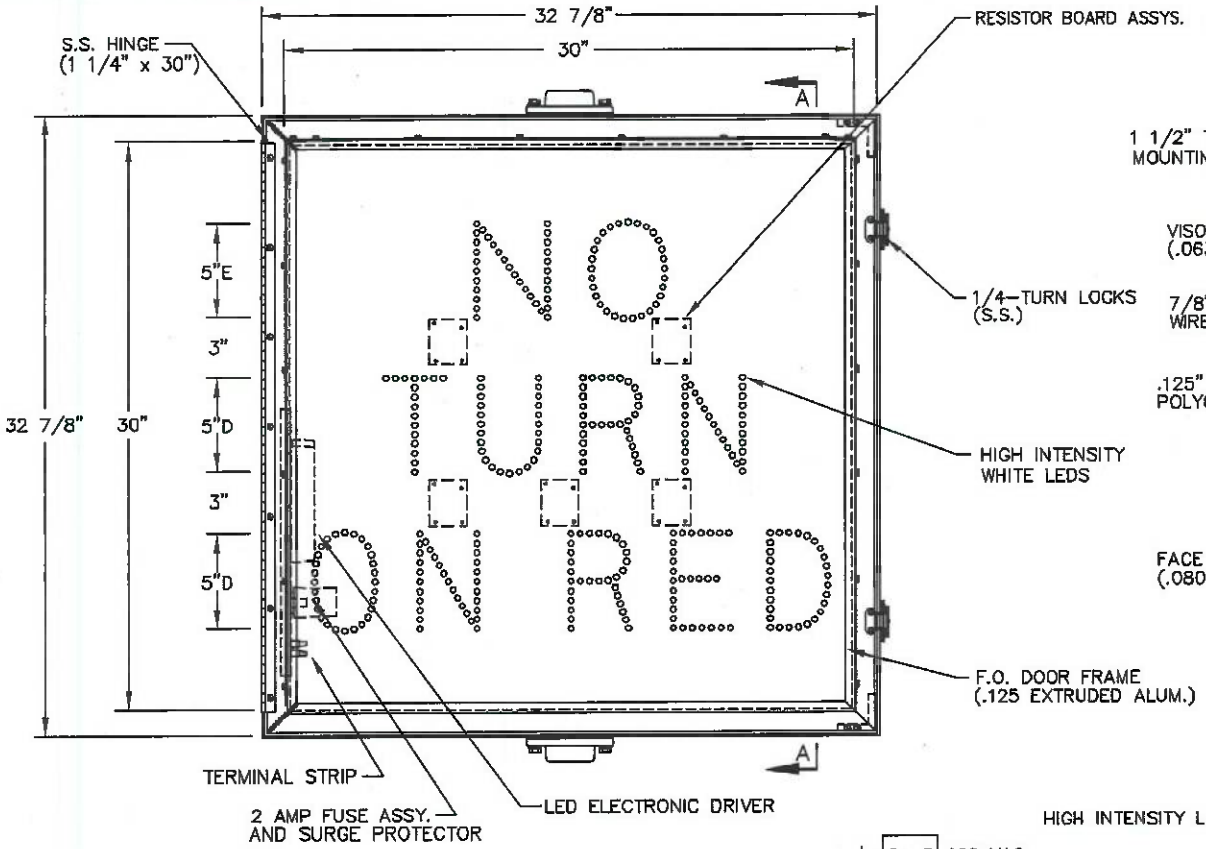

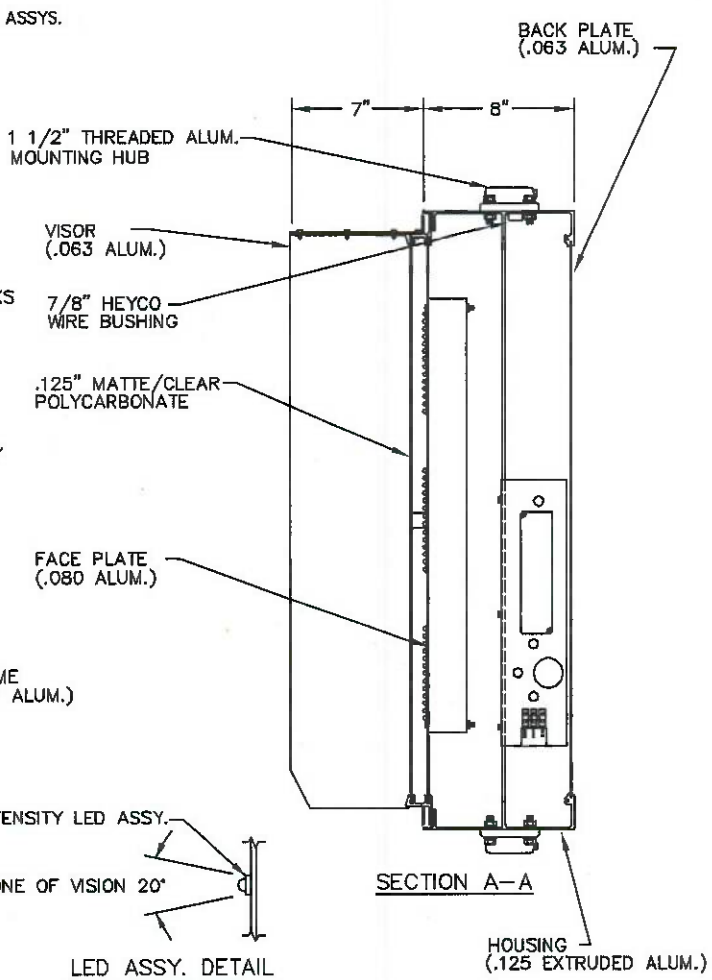

SECTION A–A

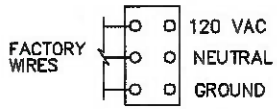

TERMINAL STRIP
CONNECTION

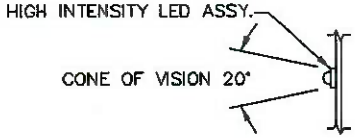

LED ASSY. DETAIL
(NOT TO SCALE)

NOTES:

1. MESSAGE SHALL BE FORMED BY SINGLE ROWS OF HIGH INTENSITY WHITE LEDS. DISPLAY SHALL HAVE GRAPHIC CHARACTERISTICS OF MUTCD LEGEND R10–11b.
2. MESSAGE SHALL COMPLETELY BLANK OUT WHEN NOT ENERGIZED.
3. MESSAGE SHALL BE VISIBLE ANYWHERE WITHIN A 20 DEG. CONE CENTERED ABOUT THE OPTIC AXIS.
4. LEDs SHALL BE PROTECTED BY A MATTE/CLEAR POLYCARBONATE LENS AND SHALL MINIMIZE ANY UNWANTED REFLECTIONS.
5. 7/8" DIA. WIRE ENTRY HOLE PROVIDED THROUGH TOP MOUNTING HUB.
6. HOUSING SHALL MEET THE REQUIREMENTS OF NEMA 4X ENCLOSURES.
7. SIGN SHALL BE EQUIPPED WITH FOUR (4) 3/16" DIA. WEEP HOLES LOCATED IN THE LOWER CORNERS OF THE HOUSING.
8. EXTERIOR OF HOUSING SHALL BE PAINTED FEDERAL YELLOW ENAMEL FINISH.
9. APPROXIMATE WEIGHT OF SIGN ASSY. – 80#

UNLESS OTHERWISE SPECIFIED, ALL DIMENSIONS HAVE A TOLERANCE OF: ± 1/4"	NATIONAL SIGN AND SIGNAL 301 S. ARMSTRONG RD BATTLE CREEK, MI 49037			
DRAWN BY: P.H.	TITLE MODEL #3030LEDNTOR–NJ 30" x 30" 1 MESSAGE / 1–WAY LED BLANK–OUT SIGN: R10–11b			
DATE: 02/25/19				
OUR JOB NO. N/A				
CUSTOMER/JOB NO.: NEW JERSEY D.O.T.	SCALE 1:10	REVISION	SIZE A	DRAWING NO. S140LED–NJ

SKETCH #5

THIS DRAWING OR SPECIFICATION IS CONFIDENTIAL AND PROPRIETARY TO NATIONAL SIGN AND SIGNAL INC. AND IT MAY NOT BE REPRODUCED, USED, OR DISCLOSED TO OTHERS WITHOUT THE WRITTEN CONSENT OF NATIONAL SIGN AND SIGNAL INC.

LTR	REVISIONS	DATE

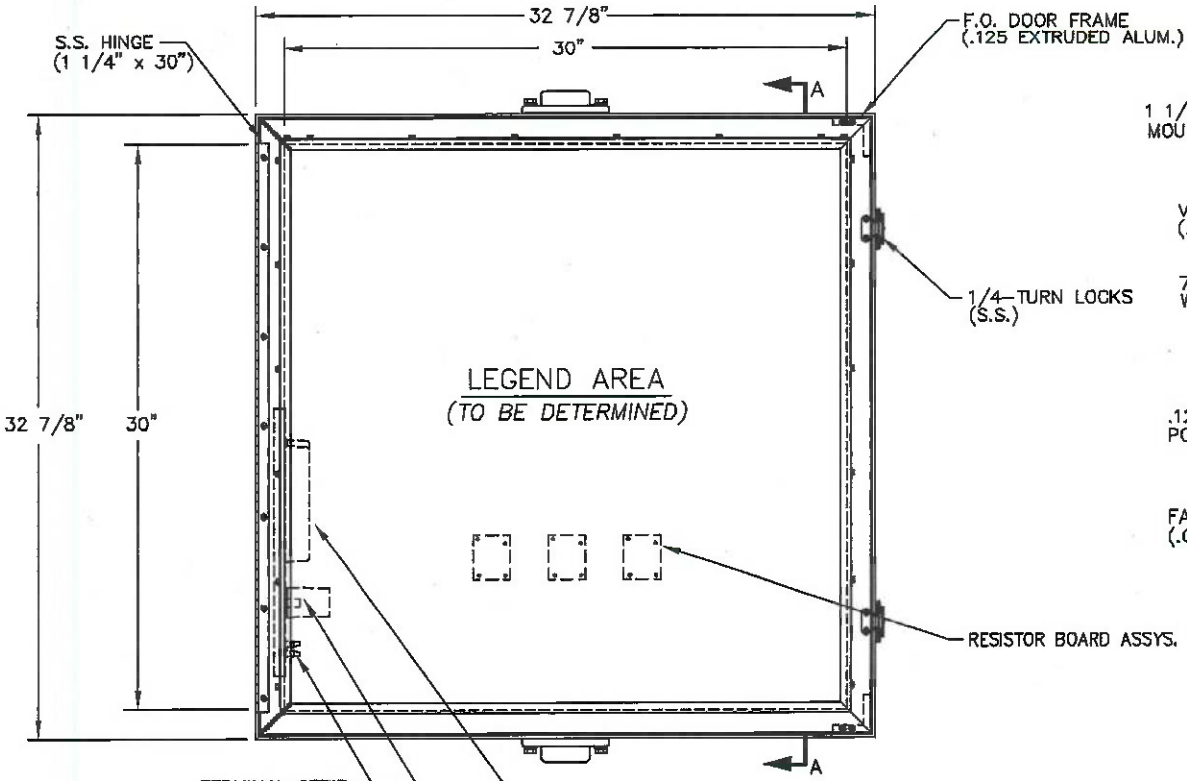

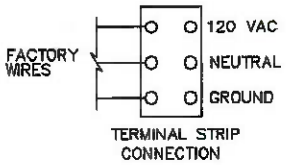

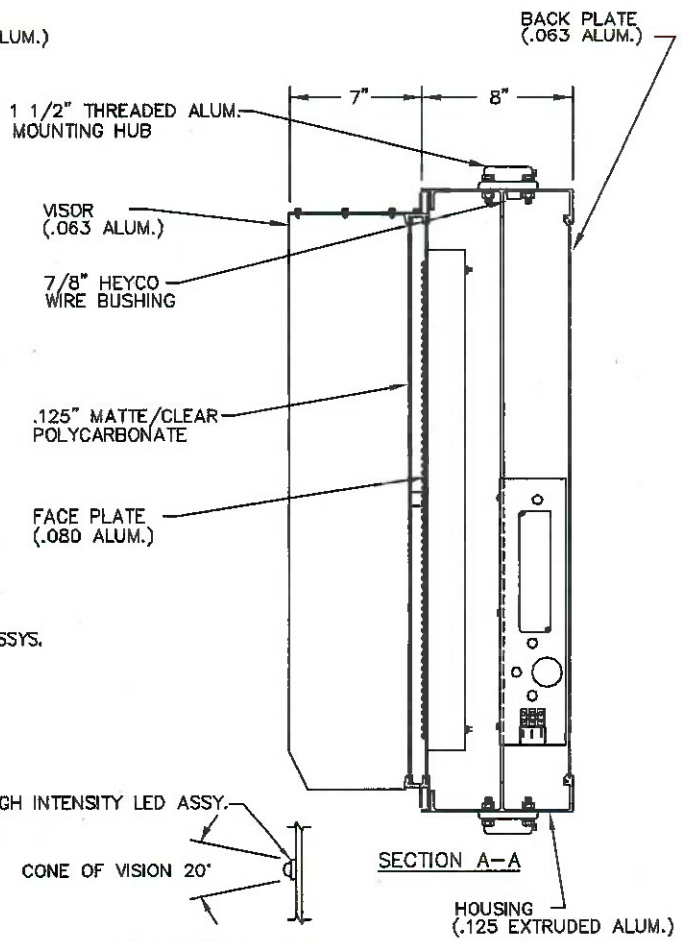

LED ASSY. DETAIL
(NOT TO SCALE)

NOTES:

1. MESSAGE SHALL BE FORMED BY ROWS OF HIGH INTENSITY LEDS. DISPLAY SHALL HAVE GRAPHIC CHARACTERISTICS OF MUTCD LEGENDS.
2. MESSAGE SHALL COMPLETELY BLANK OUT WHEN NOT ENERGIZED.
3. MESSAGE SHALL BE VISIBLE ANYWHERE WITHIN A 20 DEG. CONE CENTERED ABOUT THE OPTIC AXIS.
4. LEDS SHALL BE PROTECTED BY A MATTE/CLEAR POLYCARBONATE LENS AND SHALL MINIMIZE ANY UNWANTED REFLECTIONS.
5. 7/8" DIA. WIRE ENTRY HOLE PROVIDED THROUGH TOP MOUNTING HUB.
6. HOUSING SHALL MEET THE REQUIREMENTS OF NEMA 4X ENCLOSURES.
7. SIGN SHALL BE EQUIPPED WITH FOUR (4) 3/16" DIA. WEEP HOLES LOCATED IN THE LOWER CORNERS OF THE HOUSING.
8. EXTERIOR OF HOUSING SHALL BE PAINTED FEDERAL YELLOW ENAMEL FINISH.
9. APPROXIMATE WEIGHT OF SIGN ASSY. - 80#

UNLESS OTHERWISE SPECIFIED, ALL DIMENSIONS HAVE A TOLERANCE OF ± 1/4"	NATIONAL SIGN AND SIGNAL 301 S. ARMSTRONG RD BATTLE CREEK, MI 49037			
DRAWN BY: P.H.	TITLE MODEL #3030LEDXXX-NJ 30" x 30" 1 MESSAGE / 1-WAY LED BLANK-OUT SIGN: LEGEND T.B.D.			
DATE: 02/25/19				
OUR JOB NO. N/A				
CUSTOMER/JOB NO.: NEW JERSEY D.O.T.	SCALE 1:10	REVISION	SIZE A	DRAWING NO. S2772-NJ

SKETCH #6

NOTE:
1. - USE ER4043 FILLER WELD WIRE.
2. - 6063-T4 AL. ALLOY ASSEMBLY TO BE HEAT-TREATED TO T6 TEMPER AFTER WELDING.

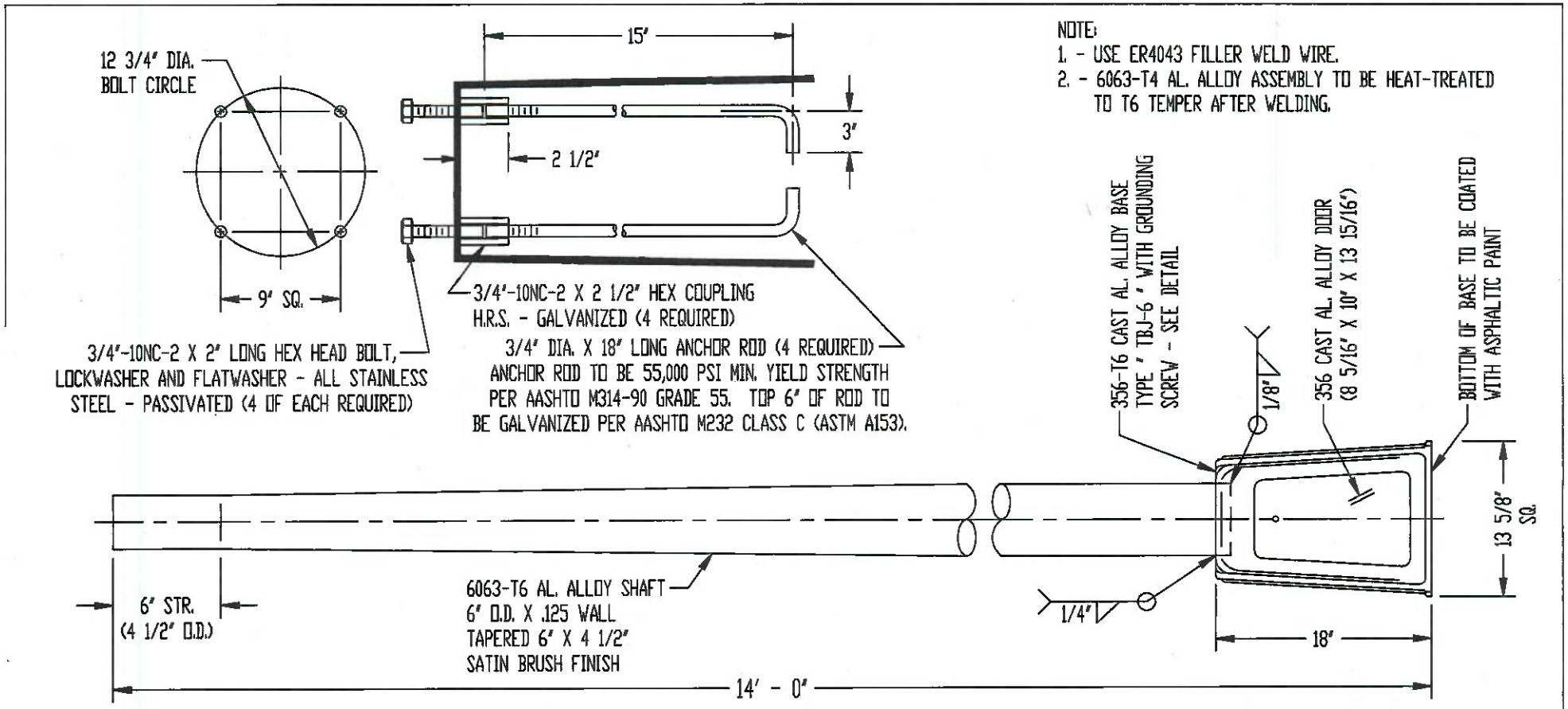

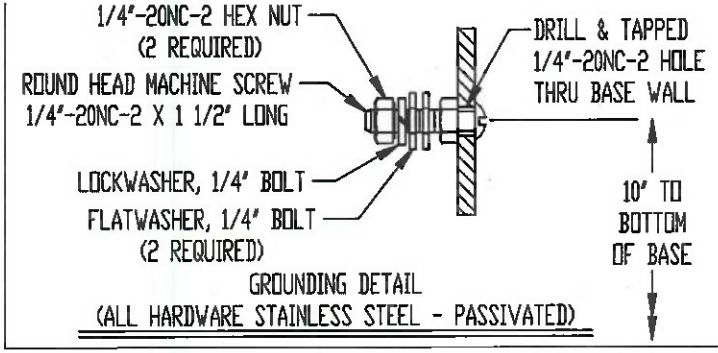

GROUNDING DETAIL
(ALL HARDWARE STAINLESS STEEL - PASSIVATED)

REVISIONS				
ALT.	DESCRIPTION	DATE	BY	CHK.

MATERIAL
STOCK SIZE
FINISH OR TEMPER
CUSTOMER

flagpoles, INC. — 95 GRAFTED HOLLOW RD. EAST SETAUKET, N.Y. 11733 — P&K TUBULAR PRODUCTS, INC.

TITLE: 14'-0" PEDESTAL POLE SP645514001G-75

		DATE
DR.	W.W.W.	03-16-09
CHK.	S.A.F.	03-16-09
APP.		
SCALE	NONE	

DWG. NO. 9614

SKETCH #7