NEW JERSEY TURNPIKE AUTHORITY

DEPARTMENT OF MAINTENANCE

SNOW PLOW PROCUREMENT DRAWINGS

MAY 2019

SHEET NO.	DESCRIPTION	REVISION NO.	REVISION DATE
SSP-01	POWER REVERSABLE SNOW PLOW PARTS DIAGRAM	0	5-19
SSP-02	ASSEMBLED STANDARD SNOW PLOW	0	4-19
SSP-03	STANDARD NJTA "J" MOLDBOARD	0	5-19
SSP-04	EXPRESSWAY SNOW PLOW PARTS DIAGRAM	0	5-19
SSP-05	EXPRESSWAY SNOW PLOW MOLDBOARD	0	5-19
SSP-06	ONE-WAY SNOW PLOW PARTS DIAGRAM	0	5-19
SSP-07	ONE-WAY SNOW PLOW MOLDBOARD	0	5-19
SSP-08	STANDARD 36" AND 48" SNOW PLOW BLADE	0	5-19
SSP-08A	STANDARD 11' SNOW PLOW BLADE (LEGACY)	0	5-19
SSP-09	36" AND 48" CARBIDE TIPPED SNOW PLOW BLADE	0	5-19
SSP-09A	11' CARBIDE TIPPED SNOW PLOW BLADE (LEGACY)	0	5-19
SSP-10	36" AND 48" RUBBER CERAMIC SNOW PLOW BLADE	0	5-19
SSP-10A	11' RUBBER CERAMIC SNOW PLOW BLADE (LEGACY)	0	5-19
SSP-11	TRIP ASSEMBLY	0	4-19
SSP-12	FULL CASTER ASSEMBLY	0	4-19
SSP-13	CASTER HOUSING	0	4-19
SSP-14	CASTER HOUSING - SIDE VIEWS	0	4-19
SSP-15	CASTER PISTON	0	4-19
SSP-16	CASTER MOUNTING PLATE	0	4-19
SSP-17	CASTER HOUSING HANDLE	0	4-19
SSP-18	CASTER BOLT	0	4-19
SSP-19	11' WING MOLDBOARD	0	5-19
SSP-20	11' WING SNOW PLOW BLADE	0	5-19
SSP-21	10' WING MOLDBOARD	0	5-19
SSP-22	10' WING SNOW PLOW BLADE	0	5-19
SPP-3-113	8" BLADES FOR ARTICULATING LOADERS	0	4-19
SPP-3-114	8" BLADES FOR ARTICULATING LOADERS	0	4-19
SPP-4-113	CUTTING EDGE, SECTIONAL CARBIDE TIPPED SNOW PLOW - 3 & 4 FOOT SECTIONS	0	4-19
SPP-4-131	SNOW PLOW MODEL O-R. 12.75 -(32, 53) - (14.75, 22.75) -1	0	4-19
SPP-4-132	LARGE SNOW PLOW PUSH BAR	0	4-19
SPP-4-133	CURB BUMPER GUARD	0	4-19
SPP-4-135	MOLDBOARD HINGE AND SEMICIRCLE HINGE	0	4-19
SPP-4-140	DOUBLE ACTING CYLINDER WITH 10" STROKE	0	4-19
SPP-4-143	TRUNNION PLATE	0	4-19
SPP-4-144-1	CASTER ASSEMBLY	0	4-19
SPP-4-144-2	CASTER ASSEMBLY	0	4-19
SPP-4-144-3	CASTER ASSEMBLY	0	4-19
SPP-4-144-4	CASTER ASSEMBLY	0	4-19
SPP-4-145-1	TRIP SPRING ASSEMBLY	0	4-19
SPP-4-145-2	CASTER ASSEMBLY	0	4-19
SPP-4-145-3	TRIP SPRING ASSEMBLY	0	4-19
SPP-4-146	CASTER HOUSING	0	4-19
SPP-4-147	SHOE, LOCKING PIN, AND RIVET PIN	0	4-19
SPP-4-149	SINGLE-ACTING RAM - 2" ROD & 10" STROKE	0	4-19

SHEET NO.	DESCRIPTION	REVISION NO.	REVISION DATE
SPP-4-154	LATCH PIN SWIVEL AND EYE BAR	0	4-19
SPP-4-156	MOLDBOARD HINGE AND SEMICIRCLE HINGES	0	4-19
SPP-4-158	WRAP AROUND-RIGHT SIDE AND CURB BUMPER	0	4-19
SPP-4-159	WRAP AROUND - LEFT SIDE	0	4-19
SPP-4-160-1	TRIP SPRING ASSEMBLY	0	4-19
SPP-4-160-2	TRIP SPRING ASSEMBLY	0	4-19
SPP-4-160-3	TRIP SPRING ASSEMBLY	0	4-19
SPP-4-164	INNER & OUTER NOSE PIECE	0	4-19
SPP-4-166	SNOW PLOW MODEL NO O - R 11.25 - (24, 42) - (13, 18) - I MOD	0	4-19
SPP-4-167-1	CASTER ASSEMBLY	0	4-19
SPP-4-167-2	CASTER ASSEMBLY	0	4-19
SPP-4-167-3	CASTER ASSEMBLY	0	4-19
SPP-4-168	SNOW PLOW BLADES	0	4-19
SPP-4-169	SNOW PLOW BLADES	0	4-19
SPP-4-173	SWIVEL BLOCK & LOCKING PIN	0	4-19
SPP-4-182-1	CASTER ASSEMBLY	0	4-19
SPP-4-182-2	CASTER ASSEMBLY	0	4-19
SPP-4-182-3	CASTER ASSEMBLY	0	4-19
SPP-4-182-4	CASTER ASSEMBLY	0	4-19
SPP-4-183	OUTER NOSE PIECE	0	4-19
SPP-4-184	LATCH PIN SWIVEL	0	4-19
SPP-4-186	INNER & OUTER NOSE PIECE	0	4-19
SPP-4-188	SNOW PLOW M.R. 11-36-15-1	0	4-19
SPP-4-191	WRAP AROUND - RIGHT SIDE & CURB BUMPER	0	4-19
SPP-4-192-1	SNOW PLOW LIFTING CHAINS	0	4-19
SPP-4-192-2	SNOW PLOW LIFTING CHAINS	0	4-19
SPP-4-192-3	SNOW PLOW LIFTING CHAINS	0	4-19
SPP-4-192-4	SNOW PLOW LIFTING CHAINS CONNECTOR ASSY.	0	4-19
SPP-4-196-1	HEAVY DUTY TRUCK HITCH ASSEMBLY	0	4-19
SPP-4-196-2	PUSH AND LIFT ASSEMBLY	0	4-19
SPP-4-196-3	ADJUSTABLE EXTENSION AND YOKE ASSEMBLY	0	4-19
SPP-4-196-4	AXLE CLAMP	0	4-19
SPP-4-196-6	LIFT ARM ASSEMBLY	0	4-19
SPP-4-196-7	MISC. TRUCK HITCH ELEMENTS	0	4-19
SPP-4-197-1	CASTER ASSEMBLY (FABRICATION)	0	4-19
SPP-4-197-2	CASTER ASSEMBLY (FABRICATION)	0	4-19
SPP-4-197-3	CASTER ASSEMBLY (FABRICATION)	0	4-19
SPP-4-202	SINGLE-ACTING RAM-2 1/2" ROD & 10" STROKE	0	4-19
SPP-4-203	LARGE SEMICIRCLE	0	4-19
SPP-4-204	SNOW PLOW SHOE	0	4-19
SPP-4-205	6" SNOW PLOW SHOE WITH EXTENDED LEG	0	4-19
SPP-4-207-A	REMOVABLE GEAR FOR OLD STYLE VALK P/R SNOW PLOW	0	4-19
SPP-4-207-B	REMOVABLE GEAR FOR OLD STYLE VALK P/R SNOW PLOW	0	4-19
SPP-4-208	CONTRACTOR'S BUMPER ANGLE	0	4-19

SHEET NO.	DESCRIPTION	REVISION NO.	REVISION DATE
SPP-4-209	LIFT CHAIN BLOCK - POWER REVERSING PLOW	0	4-19
SPP-4-211	OSCILLATING DRIVE BAR POWER REVERSING	0	4-19
SPP-4-212	CASTER ASSEMBLY (FABRICATION)	0	4-19
SPP-4-213	SNOW PLOW MODEL M.R. 11-36-MOD-J	0	4-19
SPP-4-214	3" DOUBLE ACTING CYLINDER	0	4-19
SPP-4-215	CURB BUMPER	0	4-19
SPP-4-216	CASTER HOUSING	0	4-19
SPP-4-217	EXTERNAL COIL TRIP SPRING	0	4-19
SPP-4-218	TRIP LIMITER - INNER AND OUTER	0	4-19
SPP-4-219	AXLE-PIN TYPE	0	4-19
SPP-4-220	UNIVERSAL WRAP AROUND	0	4-19
SPP-4-221	MOLDBOARD SHOE WITH TUNGSTEN CARBIDE INSERTS	0	4-19
SPP-4-222	SNOW PLOW MODEL O.R. 1200-48-1-HD	0	4-19
SPP-4-224-1	TRIP SPRING ASSEMBLY	0	4-19
SPP-4-224-2	TRIP SPRING ASSEMBLY	0	4-19
SPP-4-224-3	TRIP SPRING ASSEMBLY	0	4-19
SPP-4-225	4" DOUBLE ACTING CYLINDER	0	4-19
SPP-4-226	CASTER ASSEMBLY (FABRICATION)	0	4-19
SPP-4-227	PIPE WELDMENT	0	4-19
SPP-4-228	INNER NOSE PIECE FOR LEMBO PLOW	0	4-19
SPP-4-230	SWIVEL CHAIN BLOCK - FOR P.R. PLOWS	0	4-19

NEW JERSEY TURNPIKE AUTHORITY
MAINTENANCE DEPARTMENT
STANDARD SNOW PLOW DETAILS

INDEX OF DRAWINGS

OFFICE OF THE DIRECTOR OF MAINTENANCE
WOODBRIDGE, NEW JERSEY

DRAWING

PROCUREMENT NO.:

PRICE LINES:

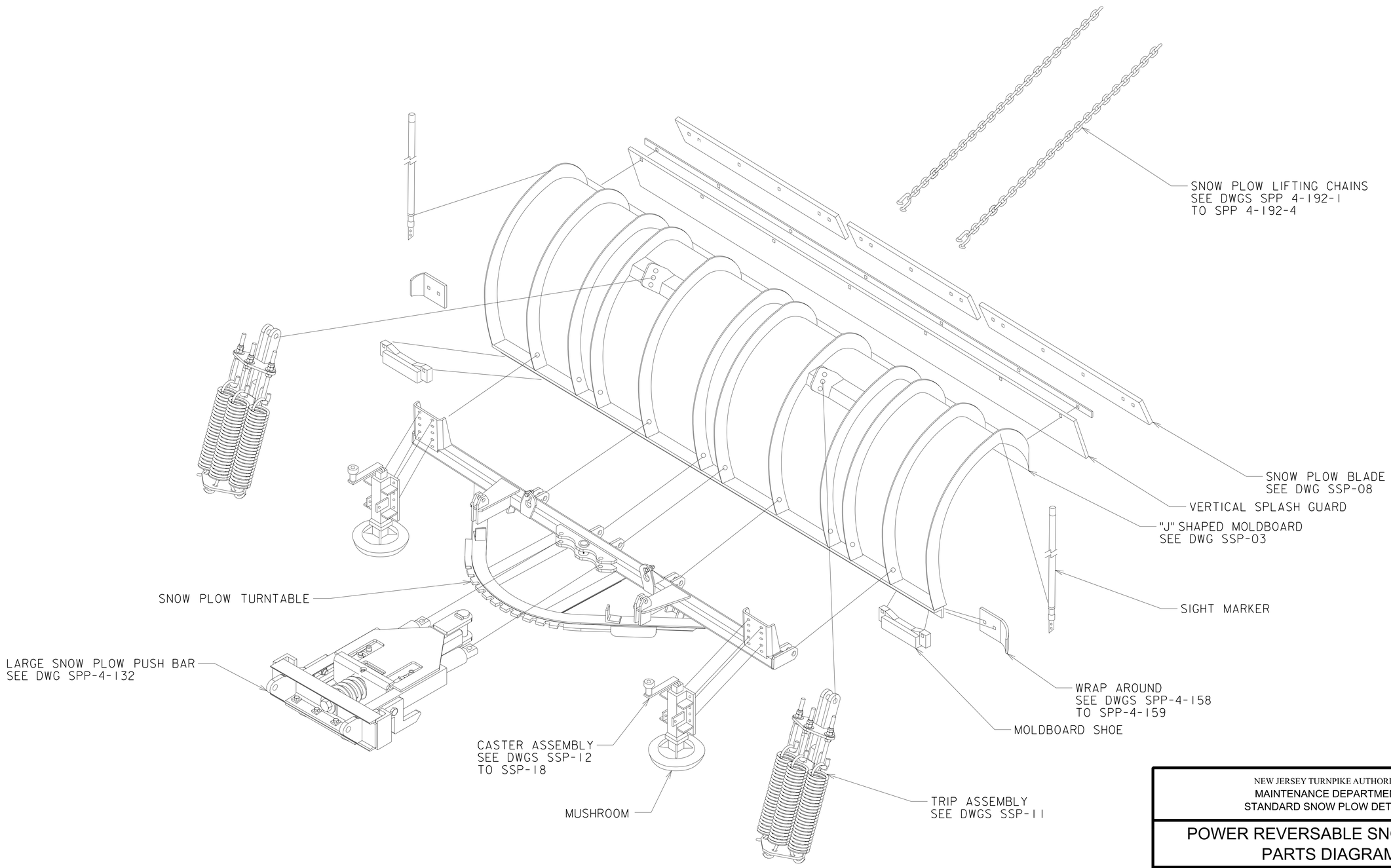

NEW JERSEY TURNPIKE AUTHORITY
MAINTENANCE DEPARTMENT
STANDARD SNOW PLOW DETAILS

POWER REVERSABLE SNOW PLOW PARTS DIAGRAM

OFFICE OF THE DIRECTOR OF MAINTENANCE
WOODBRIDGE, NEW JERSEY

DRAWING
SSP-01

PROCUREMENT NO.:

PRICE LINES:

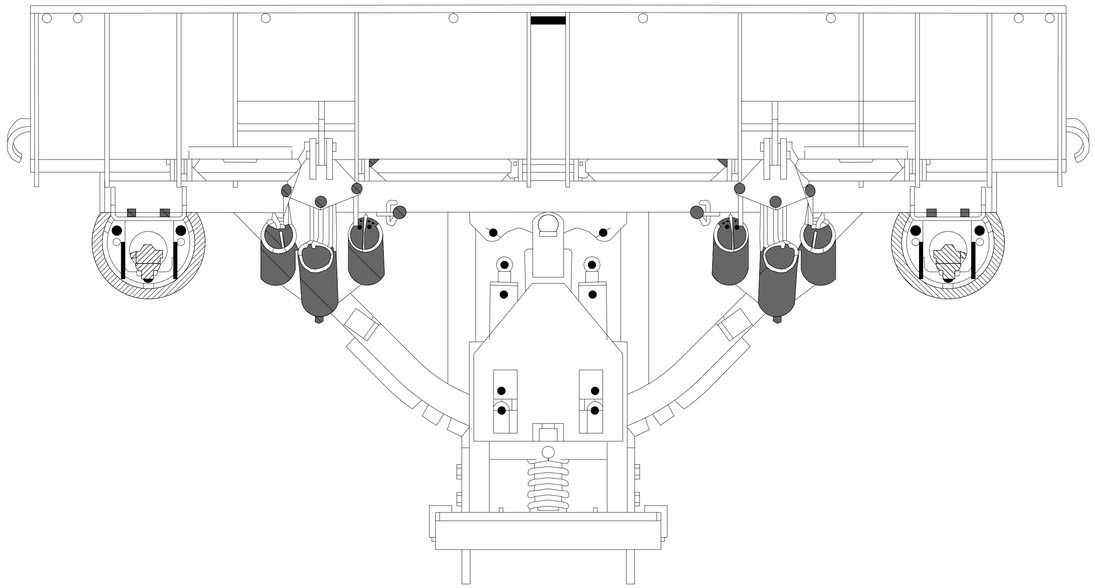

TOP VIEW

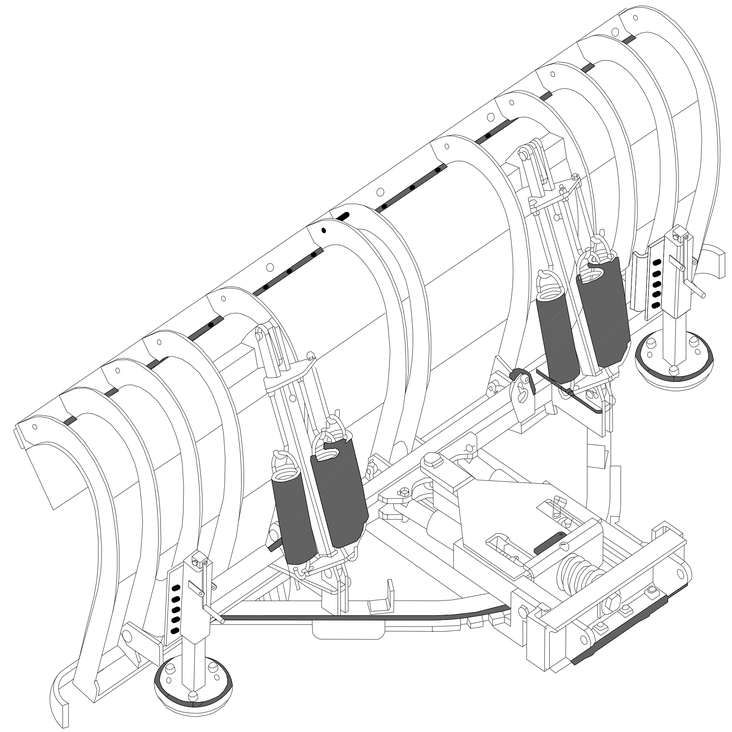

FULL VIEW

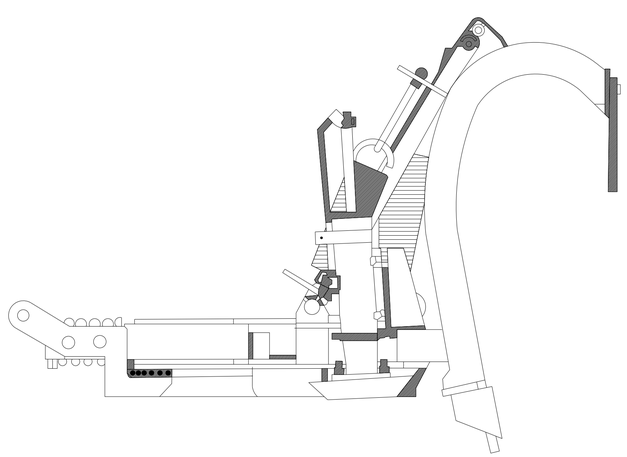

SIDE VIEW

NEW JERSEY TURNPIKE AUTHORITY
MAINTENANCE DEPARTMENT
STANDARD SNOW PLOW DETAILS

ASSEMBLED STANDARD SNOW PLOW

OFFICE OF THE DIRECTOR OF MAINTENANCE
WOODBRIDGE, NEW JERSEY

DRAWING
SSP-02

PROCUREMENT NO.:

PRICE LINES:

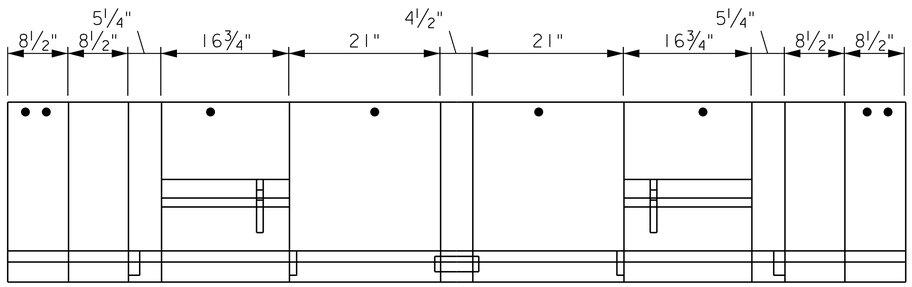

TOP VIEW

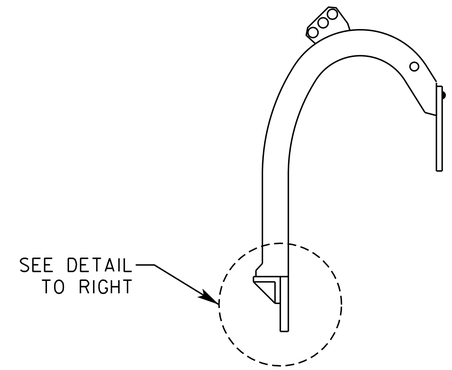

PROFILE VIEW

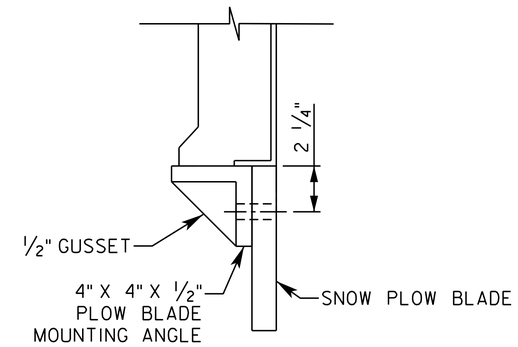

REINFORCEMENT DETAIL

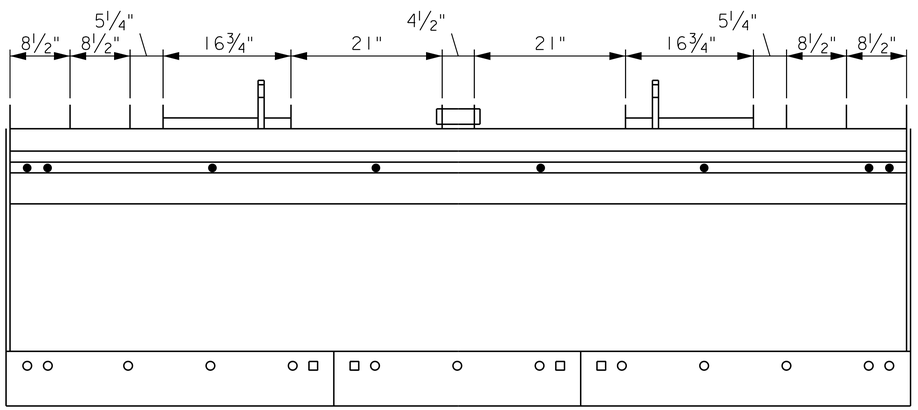

FRONT VIEW

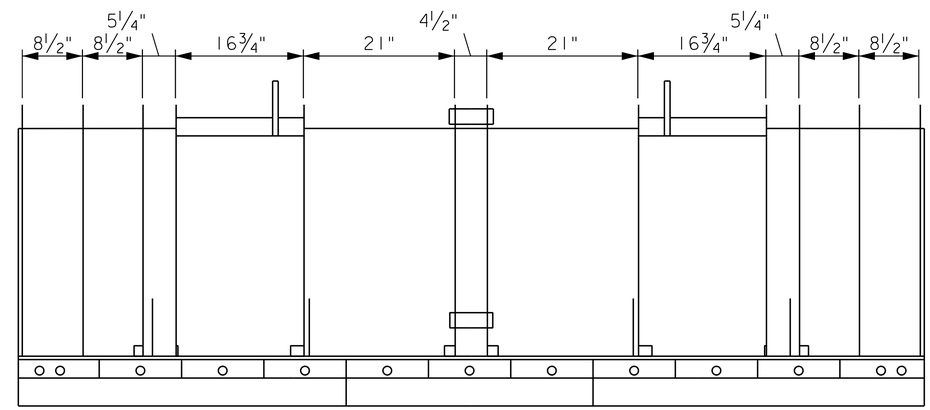

REAR VIEW

○ PLOW BLADE MOUNTING HOLE

□ UNUSED PLOW BLADE MOUNTING HOLE

NOTE:

1. ALL DIMENSIONS ARE TAKEN BETWEEN RIB SPACES AND DO NOT ACCOUNT FOR ½" RIB WIDTH

2. MOLDBOARD PLOW BLADE MOUNTING ANGLE DRILLED TO ACCEPT STANDARD AASHTO HIGHWAY PUNCH, UNLESS OTHERWISE NOTED.

NEW JERSEY TURNPIKE AUTHORITY
MAINTENANCE DEPARTMENT
STANDARD SNOW PLOW DETAILS

STANDARD NJTA "J" MOLDBOARD

OFFICE OF THE DIRECTOR OF MAINTENANCE
WOODBRIDGE, NEW JERSEY

DRAWING
SSP-03

PROCUREMENT NO.:

PRICE LINES:

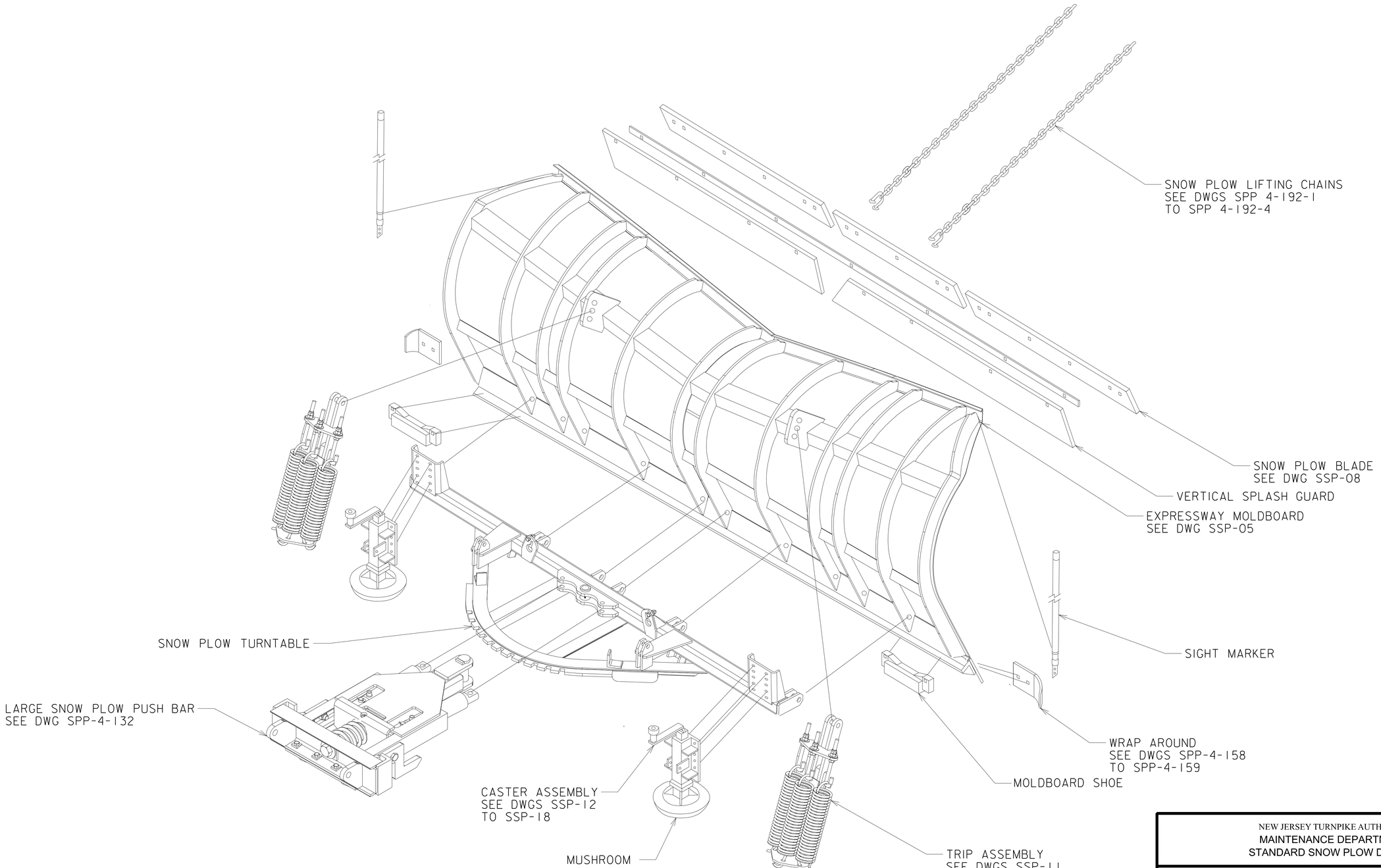

NEW JERSEY TURNPIKE AUTHORITY
MAINTENANCE DEPARTMENT
STANDARD SNOW PLOW DETAILS

EXPRESSWAY SNOW PLOW PARTS DIAGRAM

OFFICE OF THE DIRECTOR OF MAINTENANCE
WOODBRIDGE, NEW JERSEY

DRAWING
SSP-04

PROCUREMENT NO.:

PRICE LINES:

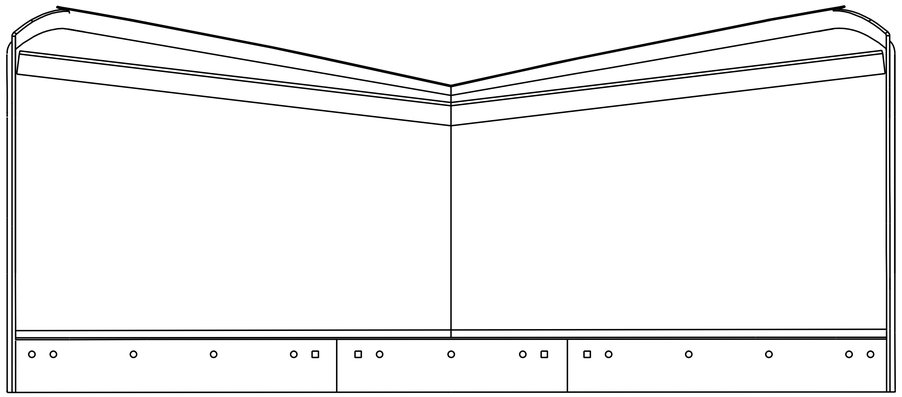

FRONT VIEW

○ PLOW BLADE MOUNTING HOLE

□ UNUSED PLOW BLADE MOUNTING HOLE

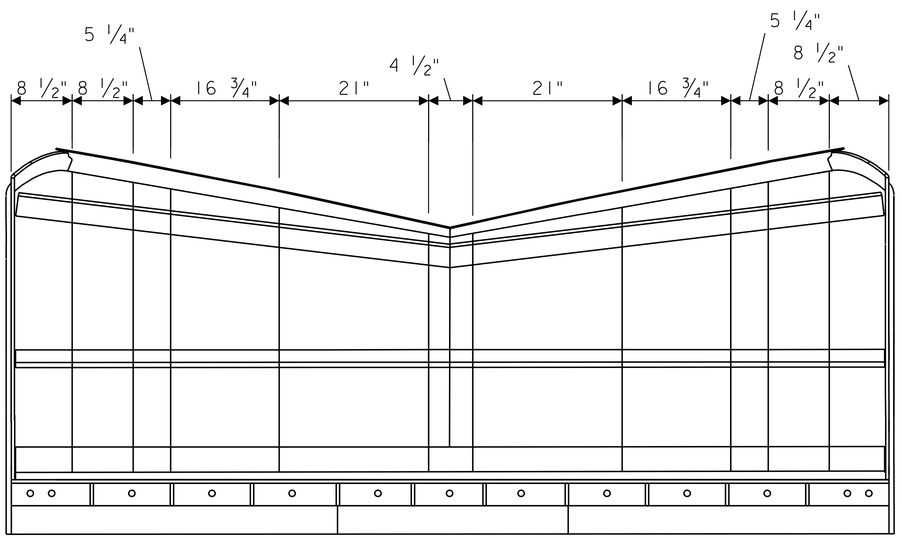

REAR VIEW

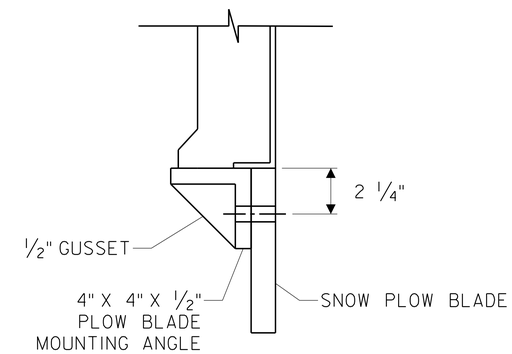

DETAIL "A" -
BLADE REINFORCEMENT

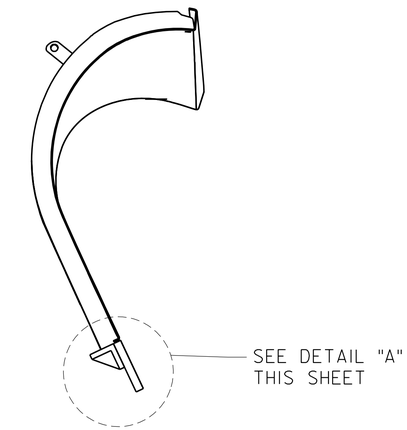

SIDE VIEW

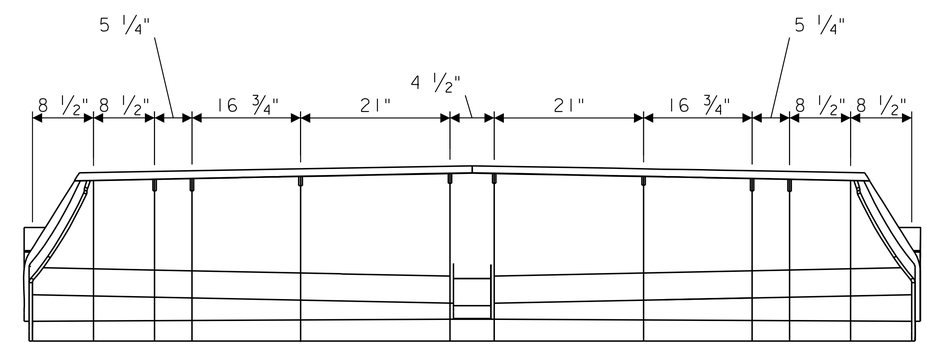

TOP VIEW

NOTE:

1. ALL DIMENSIONS ARE TAKEN BETWEEN RIB SPACES AND DO NOT ACCOUNT FOR 1/2" RIB WIDTH

2. MOLDBOARD PLOW BLADE MOUNTING ANGLE DRILLED TO ACCEPT STANDARD AASHTO HIGHWAY PUNCH, UNLESS OTHERWISE NOTED.

NEW JERSEY TURNPIKE AUTHORITY
MAINTENANCE DEPARTMENT
STANDARD SNOW PLOW DETAILS

EXPRESSWAY MOLDBOARD

OFFICE OF THE DIRECTOR OF MAINTENANCE
WOODBRIDGE, NEW JERSEY

DRAWING
SSP-05

PROCUREMENT NO.:

PRICE LINES:

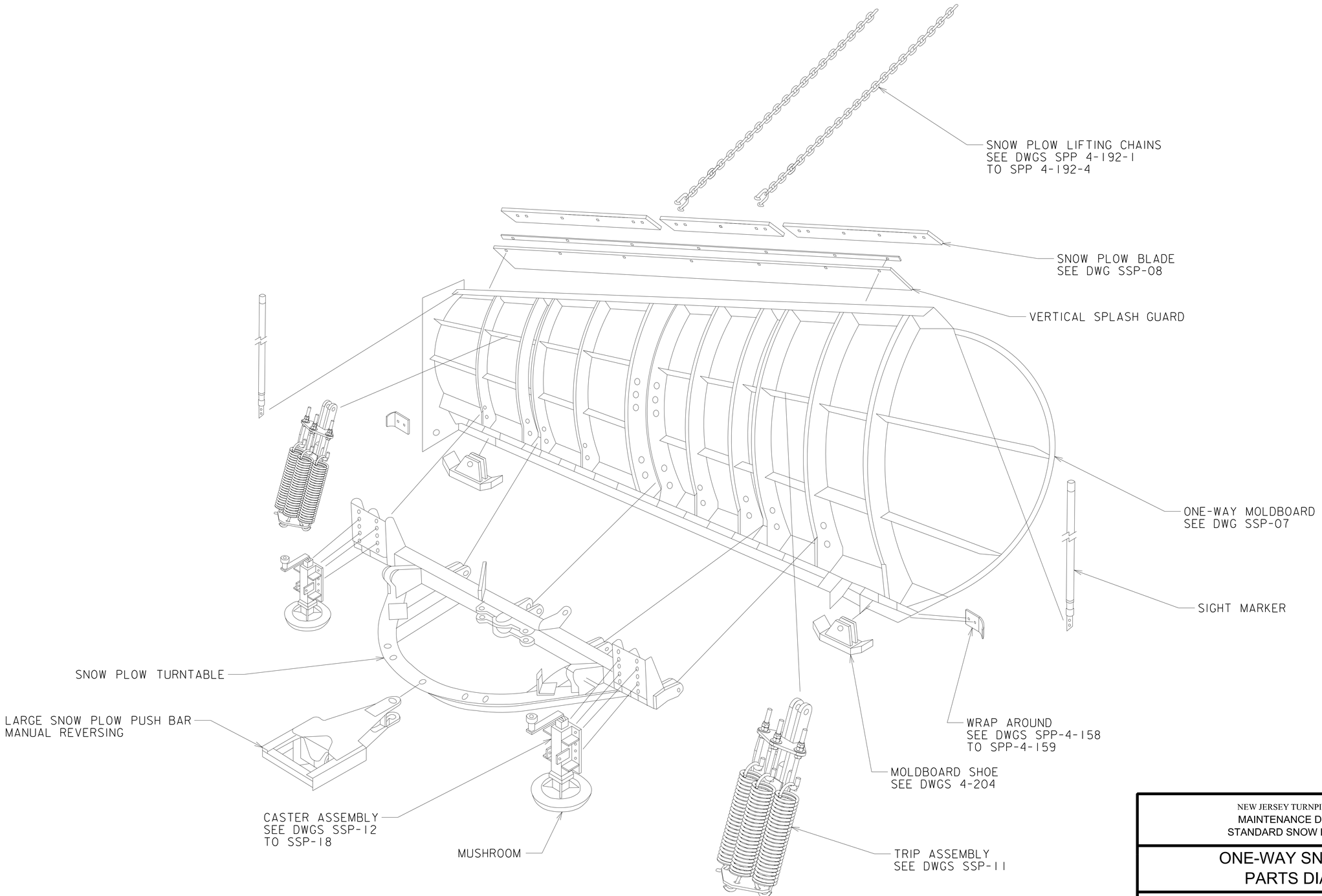

NEW JERSEY TURNPIKE AUTHORITY
MAINTENANCE DEPARTMENT
STANDARD SNOW PLOW DETAILS

ONE-WAY SNOW PLOW PARTS DIAGRAM

OFFICE OF THE DIRECTOR OF MAINTENANCE
WOODBRIDGE, NEW JERSEY

DRAWING
SSP-06

PROCUREMENT NO.:

PRICE LINES:

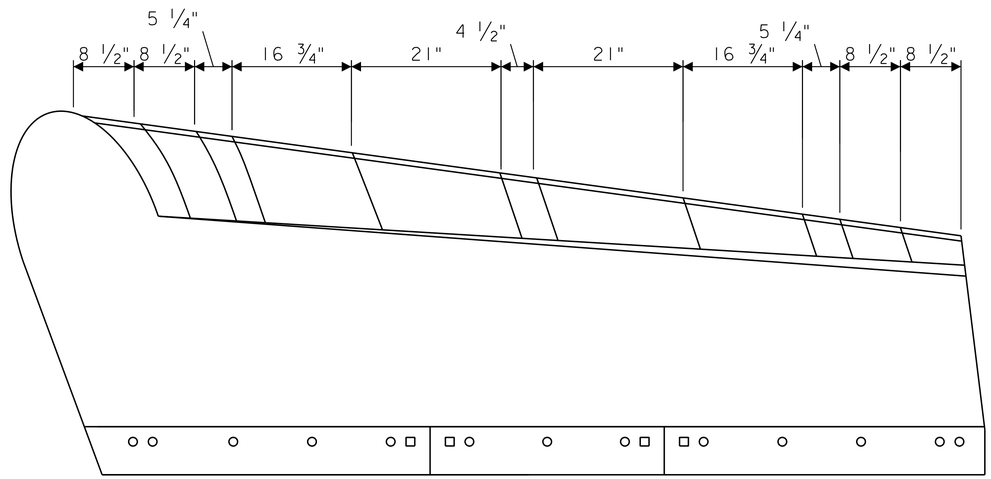

FRONT VIEW

○ PLOW BLADE MOUNTING HOLE

□ UNUSED PLOW BLADE MOUNTING HOLE

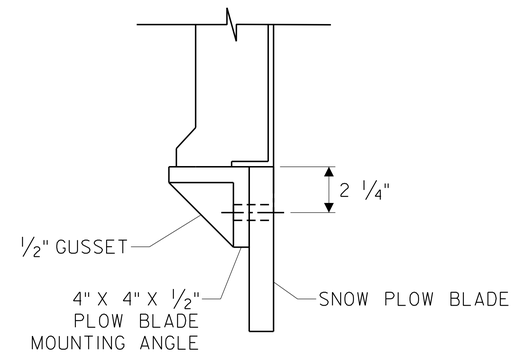

DETAIL "A" -
BLADE REINFORCEMENT

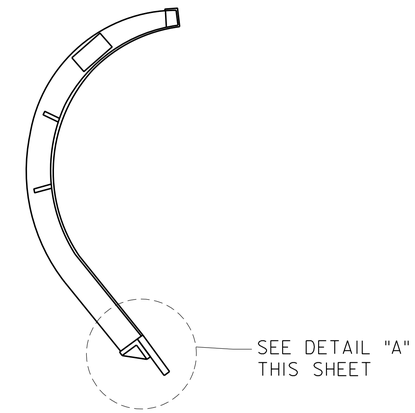

SIDE VIEW

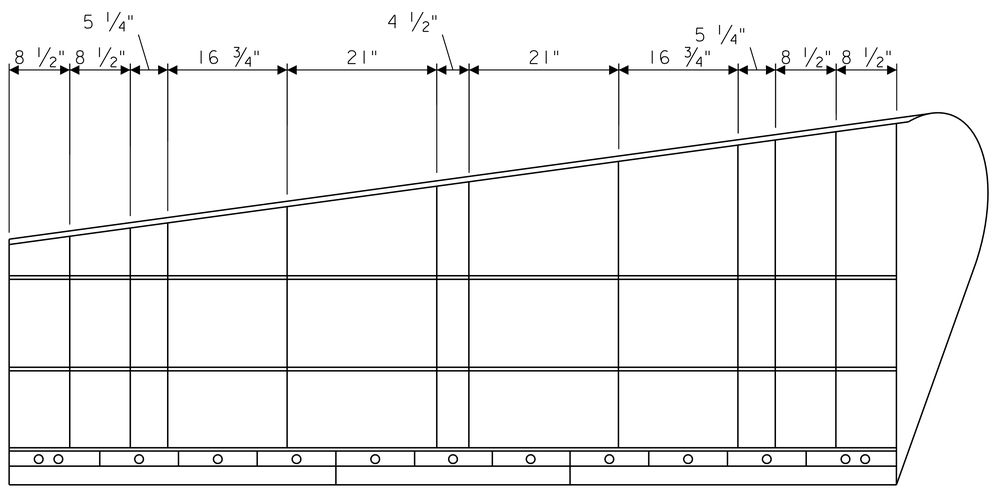

REAR VIEW

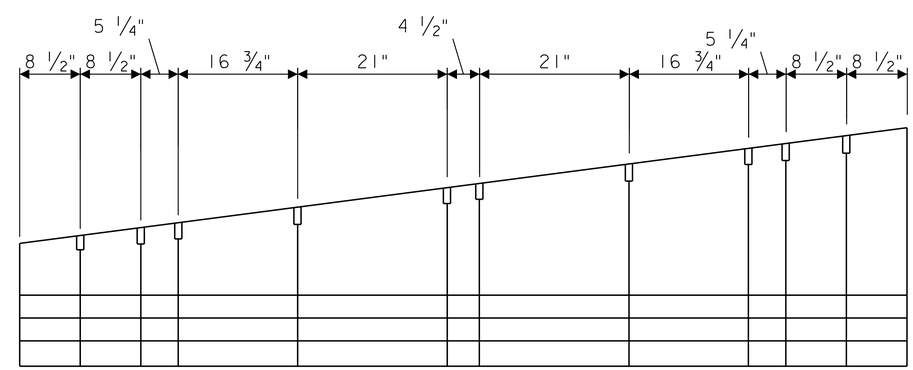

TOP VIEW

NOTE:

1. ALL DIMENSIONS ARE TAKEN BETWEEN RIB SPACES AND DO NOT ACCOUNT FOR 1/2" RIB WIDTH

2. MOLDBOARD PLOW BLADE MOUNTING ANGLE DRILLED TO ACCEPT STANDARD AASHTO HIGHWAY PUNCH, UNLESS OTHERWISE NOTED.

NEW JERSEY TURNPIKE AUTHORITY
MAINTENANCE DEPARTMENT
STANDARD SNOW PLOW DETAILS

ONE-WAY MOLDBOARD

OFFICE OF THE DIRECTOR OF MAINTENANCE
WOODBRIDGE, NEW JERSEY

DRAWING
SSP-07

PROCUREMENT NO.:

PRICE LINES:

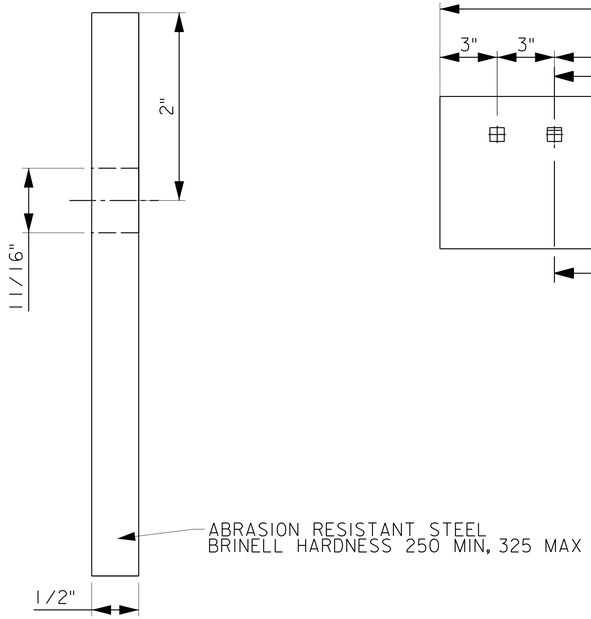

SECTION VIEW A-A

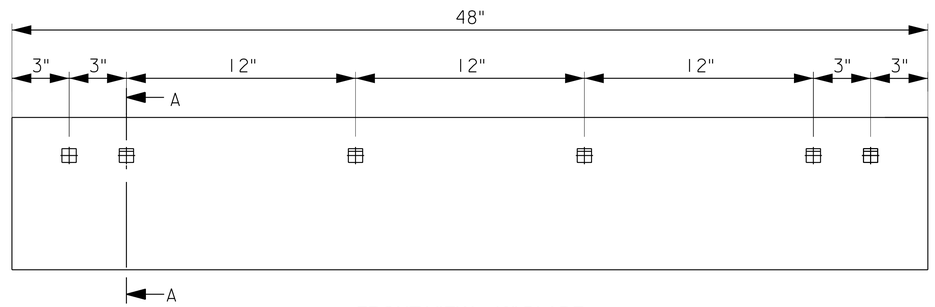

FRONT VIEW - 48" BLADE

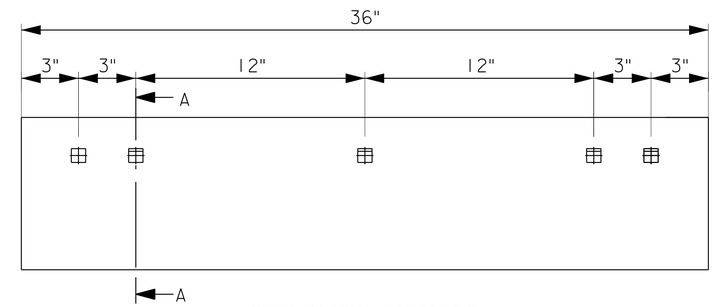

FRONT VIEW - 36" BLADE

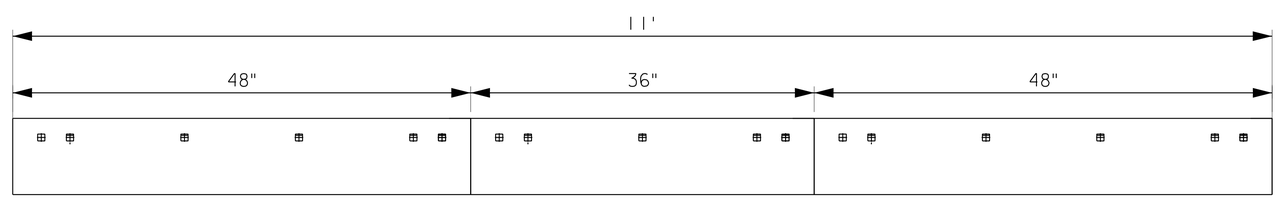

FRONT VIEW - INSTALLED

NOTE:

1. MOUNTING HOLES SPACED TO CONFORM TO AASHTO HIGHWAY PUNCH MOLDBOARDS.

NEW JERSEY TURNPIKE AUTHORITY
MAINTENANCE DEPARTMENT
STANDARD SNOW PLOW DETAILS

STANDARD 36" AND 48"
SNOW PLOW BLADE

OFFICE OF THE DIRECTOR OF MAINTENANCE
WOODBRIDGE, NEW JERSEY

DRAWING
SSP-08

PROCUREMENT NO.:

PRICE LINES:

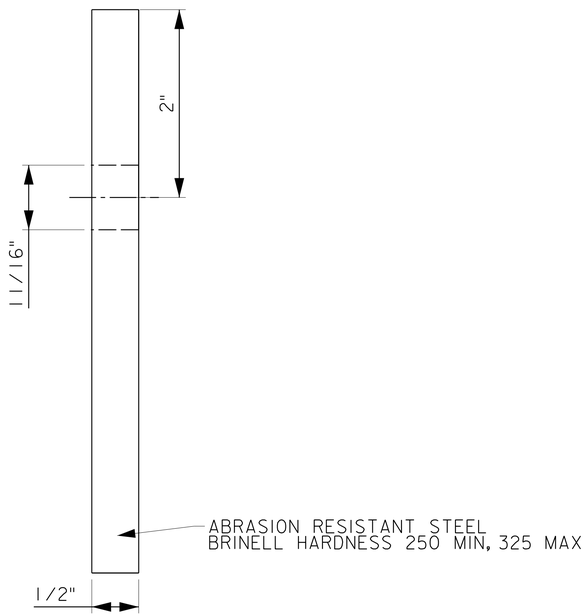

SECTION VIEW A-A

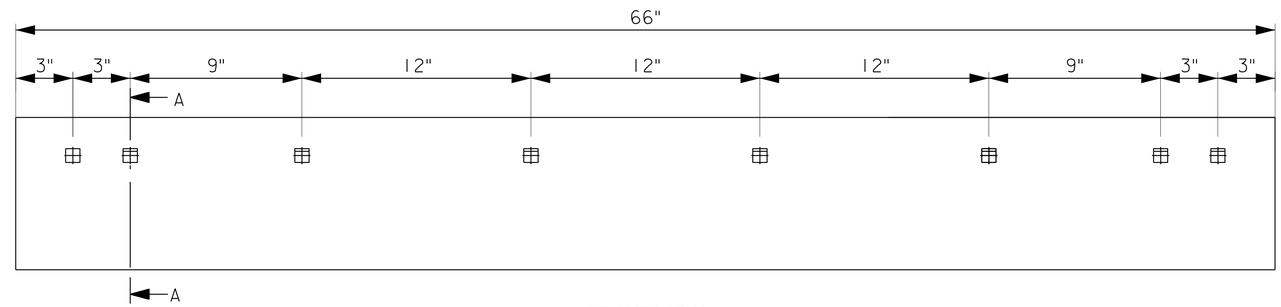

FRONT VIEW

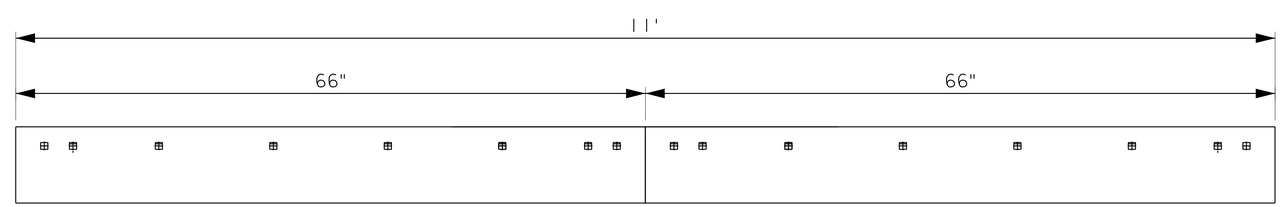

FRONT VIEW - INSTALLED

NOTE:

1. MOUNTING HOLES SPACED FOR USE ON LEGACY PLOW MOLDBOARDS (2009).

NEW JERSEY TURNPIKE AUTHORITY
MAINTENANCE DEPARTMENT
STANDARD SNOW PLOW DETAILS

STANDARD 11' SNOW PLOW BLADE (LEGACY)

OFFICE OF THE DIRECTOR OF MAINTENANCE
WOODBRIDGE, NEW JERSEY

DRAWING
SSP-08A

PROCUREMENT NO.:

PRICE LINES:

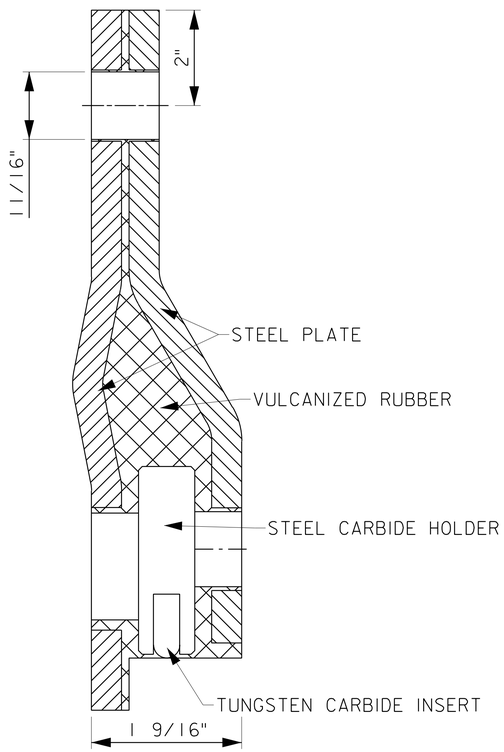

SECTION VIEW A-A

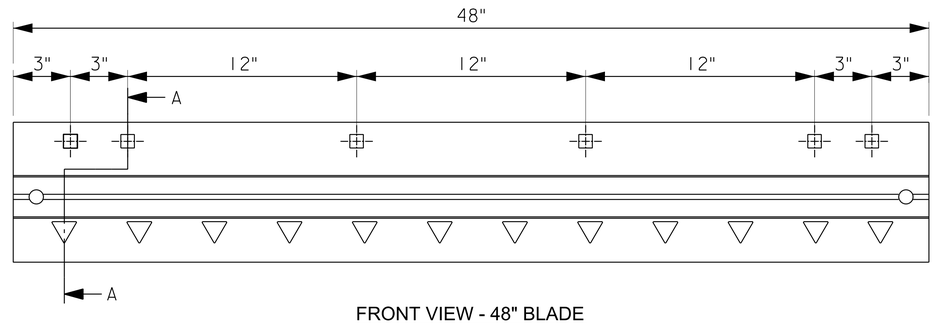

FRONT VIEW - 48" BLADE

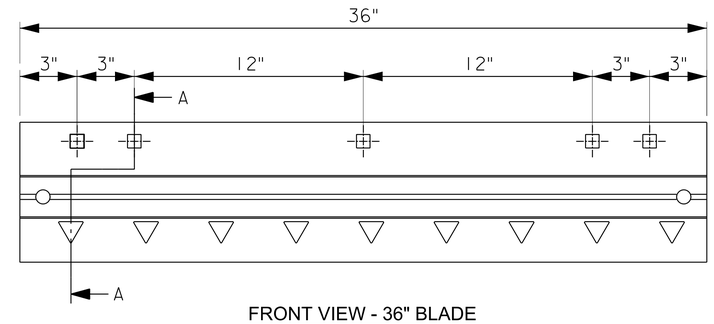

FRONT VIEW - 36" BLADE

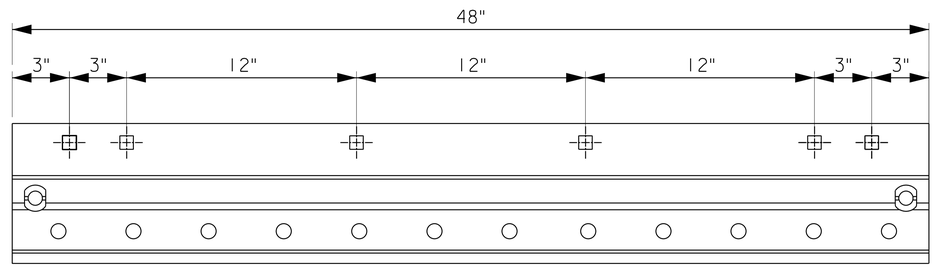

REAR VIEW - 48" BLADE

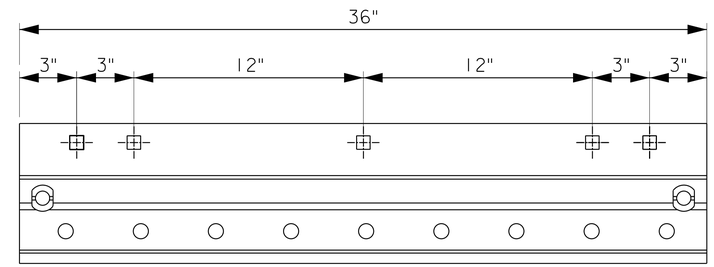

REAR VIEW - 36" BLADE

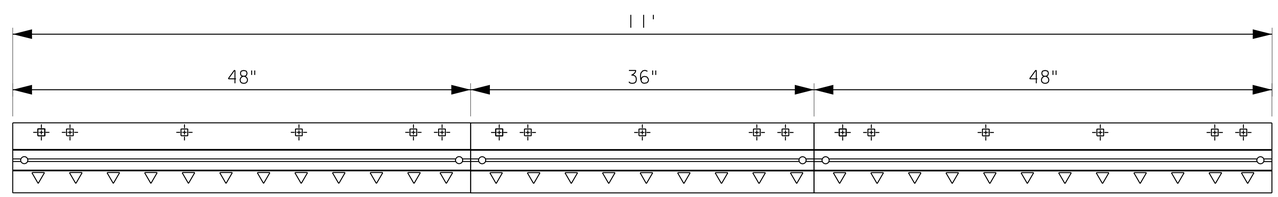

FRONT VIEW - INSTALLED

NOTE:

1. MOUNTING HOLES SPACED TO CONFORM TO AASHTO HIGHWAY PUNCH MOLDBOARDS.

NEW JERSEY TURNPIKE AUTHORITY
MAINTENANCE DEPARTMENT
STANDARD SNOW PLOW DETAILS

36" AND 48" CARBIDE TIPPED SNOW PLOW BLADE

OFFICE OF THE DIRECTOR OF MAINTENANCE
WOODBRIDGE, NEW JERSEY

DRAWING
SSP-09

PROCUREMENT NO.:

PRICE LINES:

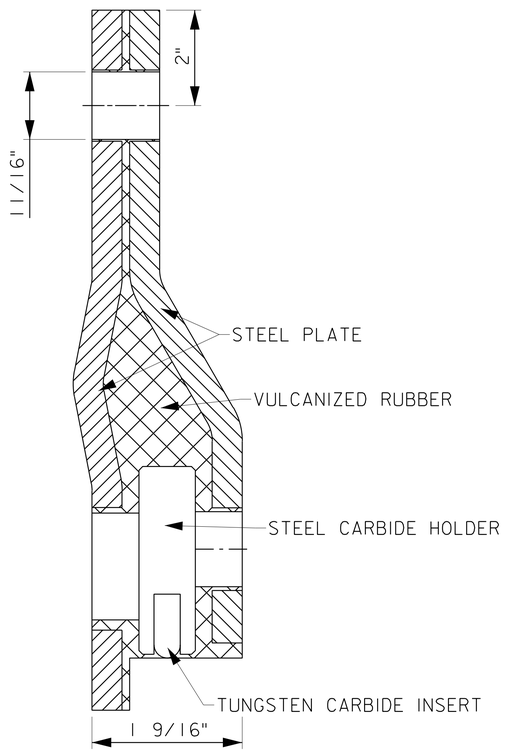

SECTION VIEW A-A

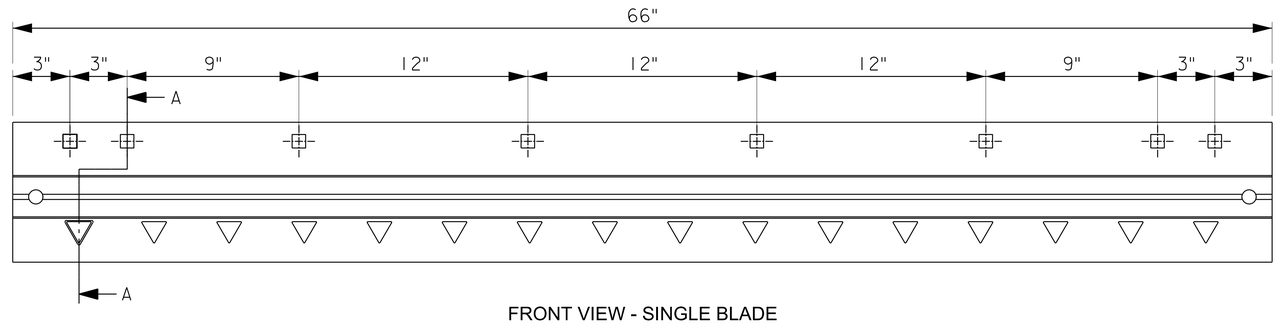

FRONT VIEW - SINGLE BLADE

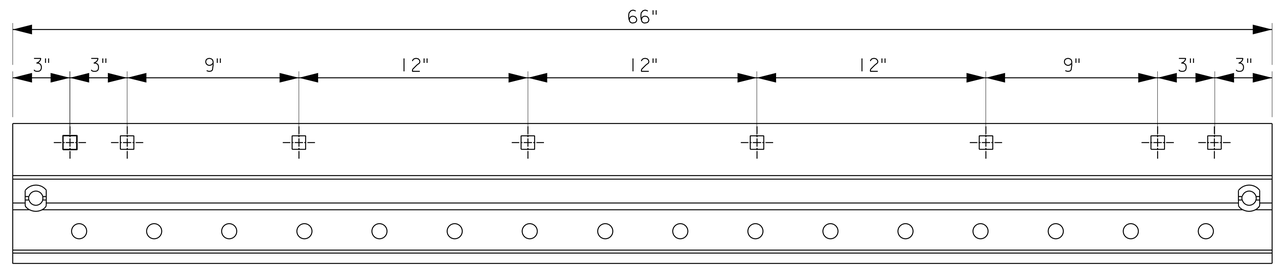

REAR VIEW - SINGLE BLADE

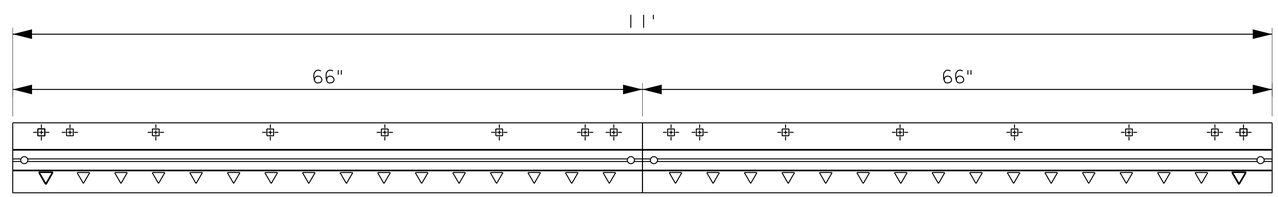

FRONT VIEW - INSTALLED

NOTE:

1. MOUNTING HOLES SPACED FOR USE ON LEGACY PLOW MOLDBOARDS (2009).

NEW JERSEY TURNPIKE AUTHORITY
MAINTENANCE DEPARTMENT
STANDARD SNOW PLOW DETAILS

11' CARBIDE TIPPED
SNOW PLOW BLADE (LEGACY)

OFFICE OF THE DIRECTOR OF MAINTENANCE
WOODBRIDGE, NEW JERSEY

DRAWING
SSP-09A

PROCUREMENT NO.:

PRICE LINES:

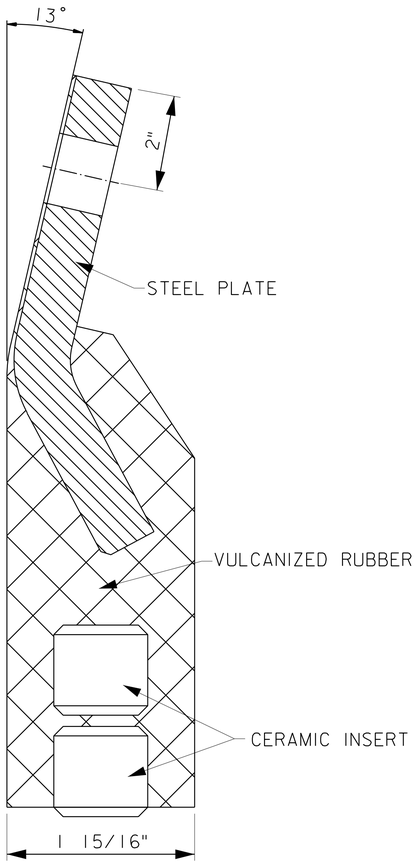

SECTION VIEW A-A

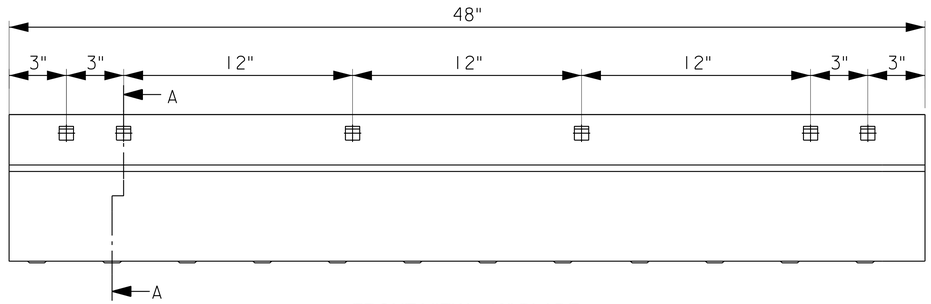

FRONT VIEW - 48" BLADE

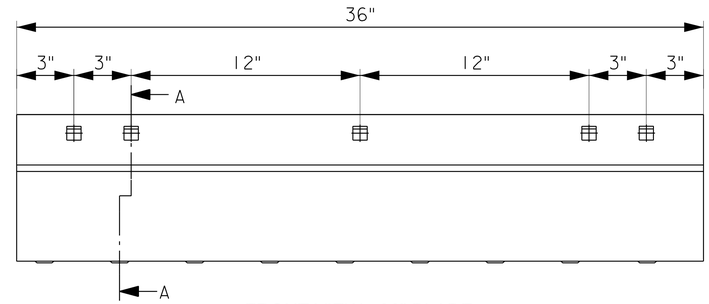

FRONT VIEW - 36" BLADE

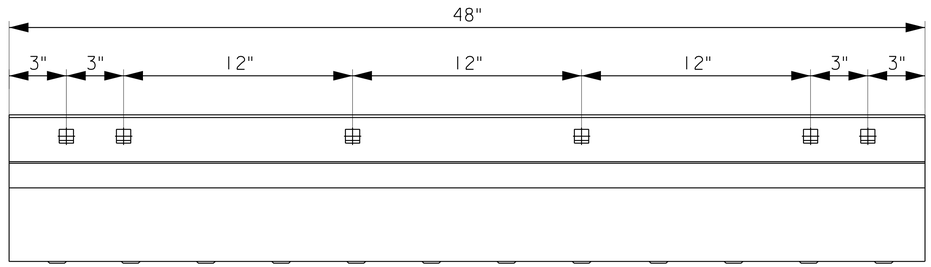

REAR VIEW - 48" BLADE

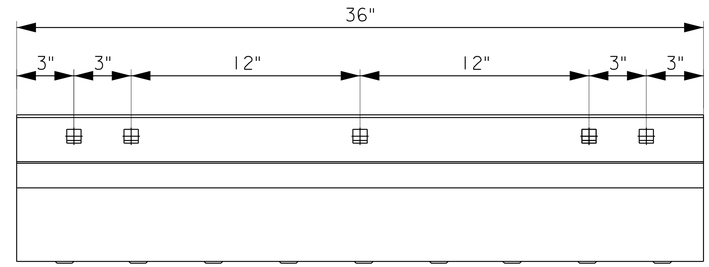

REAR VIEW - 36" BLADE

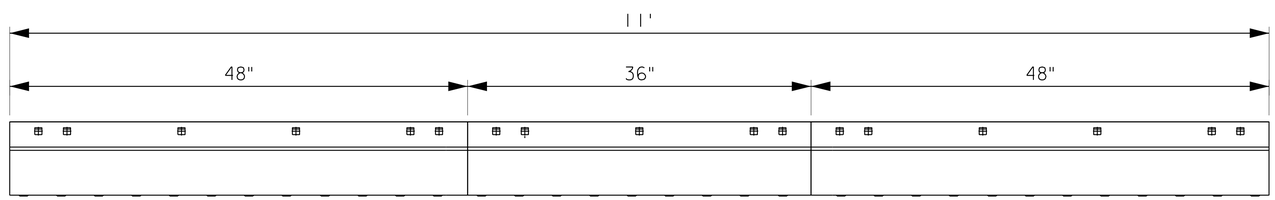

FRONT VIEW - INSTALLED

NOTE:

1. MOUNTING HOLES SPACED TO CONFORM TO AASHTO HIGHWAY PUNCH MOLDBOARDS.

NEW JERSEY TURNPIKE AUTHORITY
MAINTENANCE DEPARTMENT
STANDARD SNOW PLOW DETAILS

36" AND 48" RUBBER CERAMIC SNOW PLOW BLADE

OFFICE OF THE DIRECTOR OF MAINTENANCE
WOODBRIDGE, NEW JERSEY

DRAWING
SSP-10

PROCUREMENT NO.:

PRICE LINES:

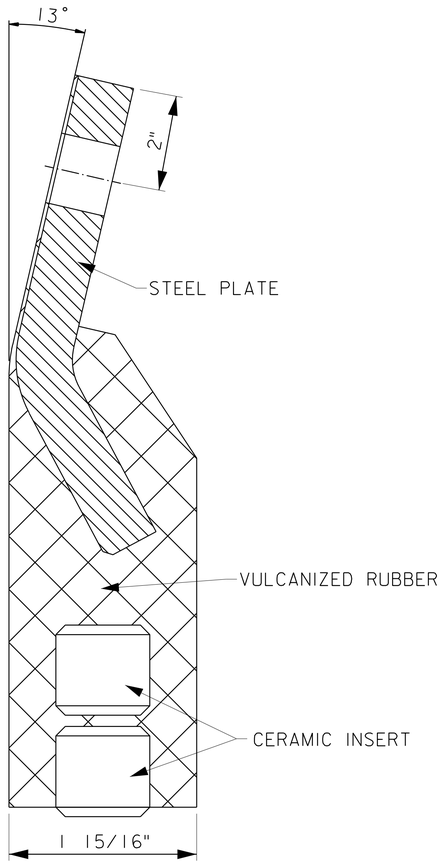

SECTION VIEW A-A

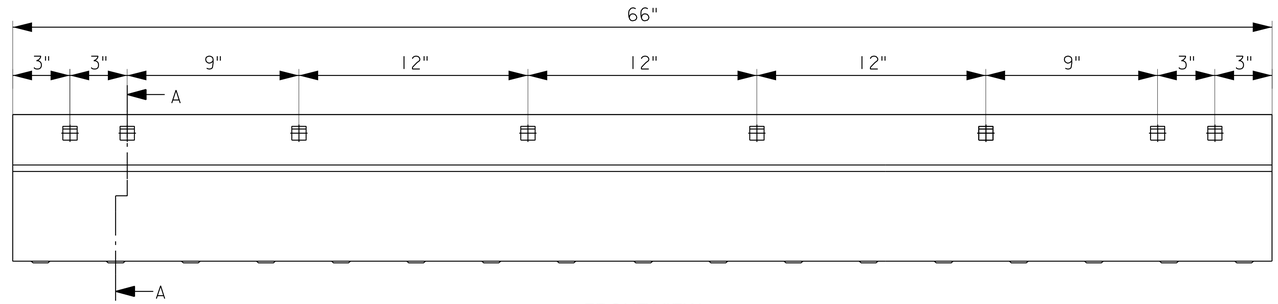

FRONT VIEW

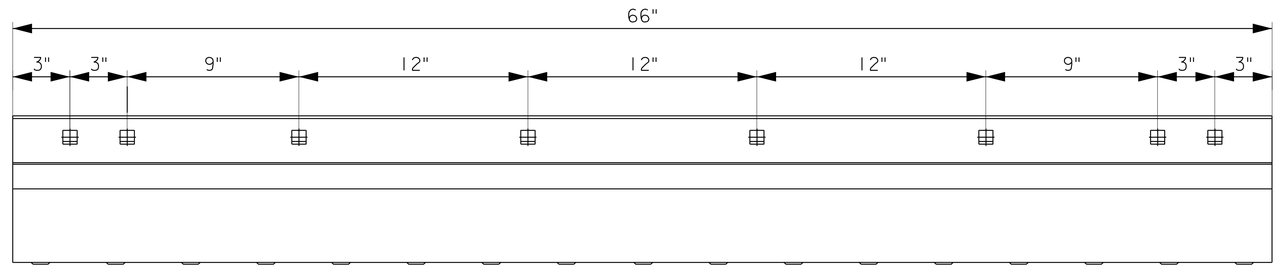

REAR VIEW

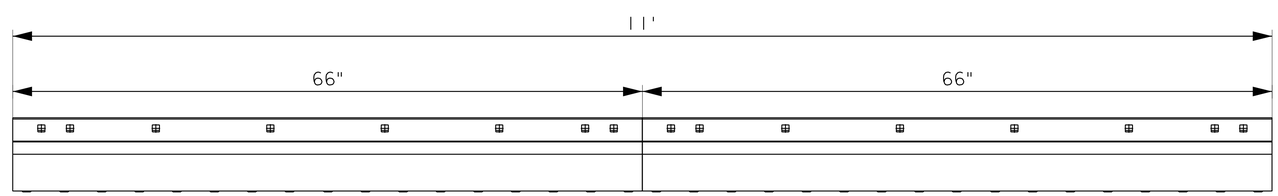

FRONT VIEW - INSTALLED

NOTE:

1. MOUNTING HOLES SPACED FOR USE ON LEGACY PLOW MOLDBOARDS (2009).

NEW JERSEY TURNPIKE AUTHORITY
MAINTENANCE DEPARTMENT
STANDARD SNOW PLOW DETAILS

11' RUBBER CERAMIC
SNOW PLOW BLADE (LEGACY)

OFFICE OF THE DIRECTOR OF MAINTENANCE
WOODBRIDGE, NEW JERSEY

DRAWING
SSP-10A

PROCUREMENT NO.:

PRICE LINES:

BILL OF MATERIALS		
ITEM	QUANTITY	DESCRIPTION
1	1	TRIP LOCK, WELDMENT, TOP, NJ TURNPIKE
2	1	TRIP LOCK, WELDMENT, LOWER
3	3	BOLT, J , 5/8-11X9.75 G5
4	6	NUT, HEX, 5/8-11NC, SS
5	3	SPRING, EXTENSION, .5 X 4.50 X 17.25

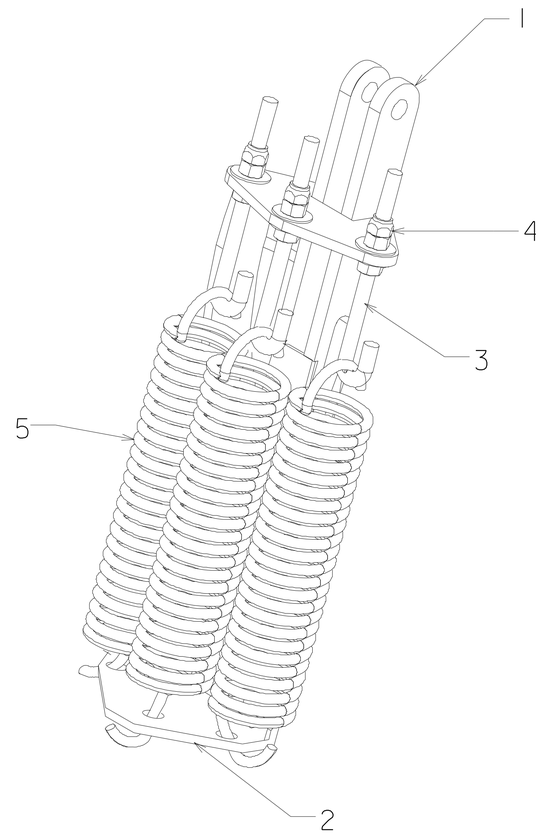

NEW JERSEY TURNPIKE AUTHORITY
MAINTENANCE DEPARTMENT
STANDARD SNOW PLOW DETAILS

TRIP ASSEMBLY

OFFICE OF THE DIRECTOR OF MAINTENANCE
WOODBRIDGE, NEW JERSEY

DRAWING
SSP-11

PROCUREMENT NO.:

PRICE LINES:

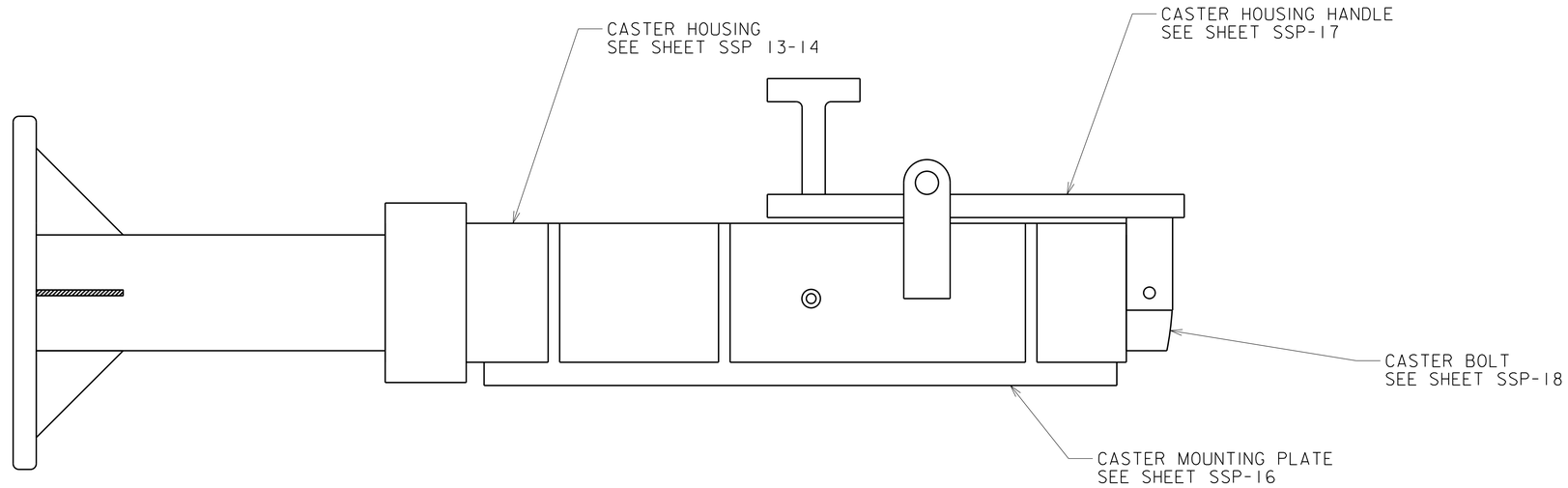

SIDE-LEFT: HANDLE PINNED DOWN

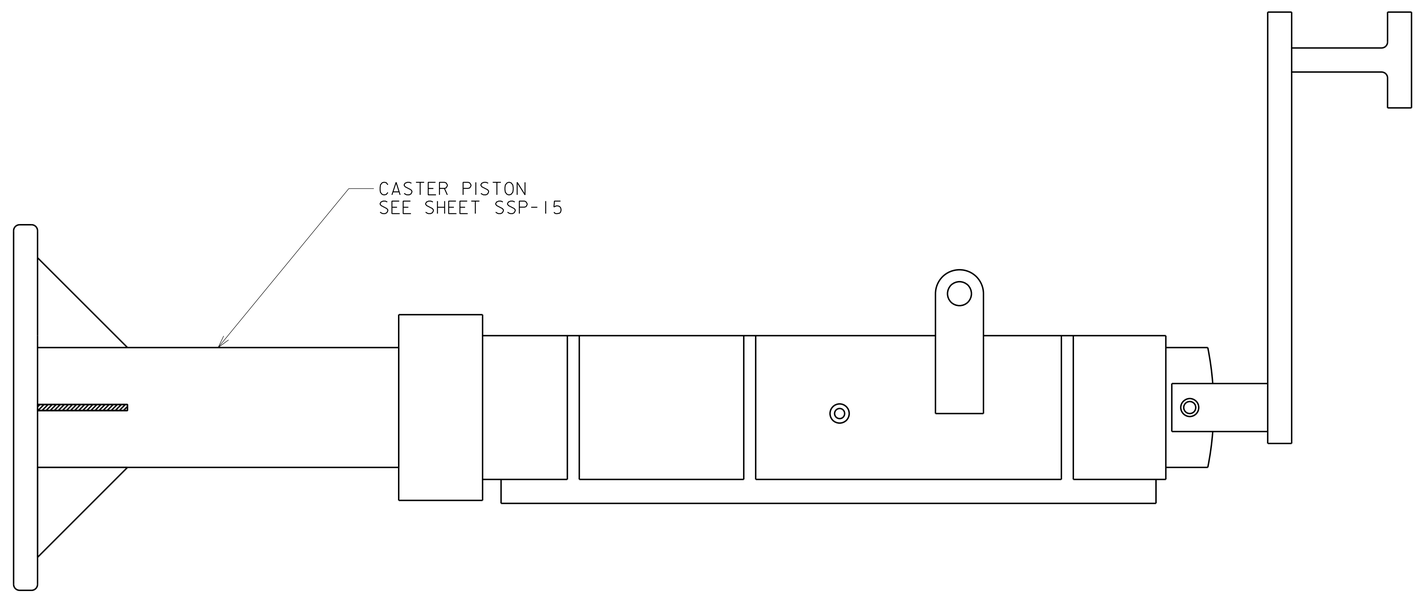

SIDE-RIGHT: HANDLE UNPINNED UP

NEW JERSEY TURNPIKE AUTHORITY
MAINTENANCE DEPARTMENT
STANDARD SNOW PLOW DETAILS

FULL CASTER ASSEMBLY

OFFICE OF THE DIRECTOR OF MAINTENANCE
WOODBRIDGE, NEW JERSEY

DRAWING
SSP-12

PROCUREMENT NO.:

PRICE LINES:

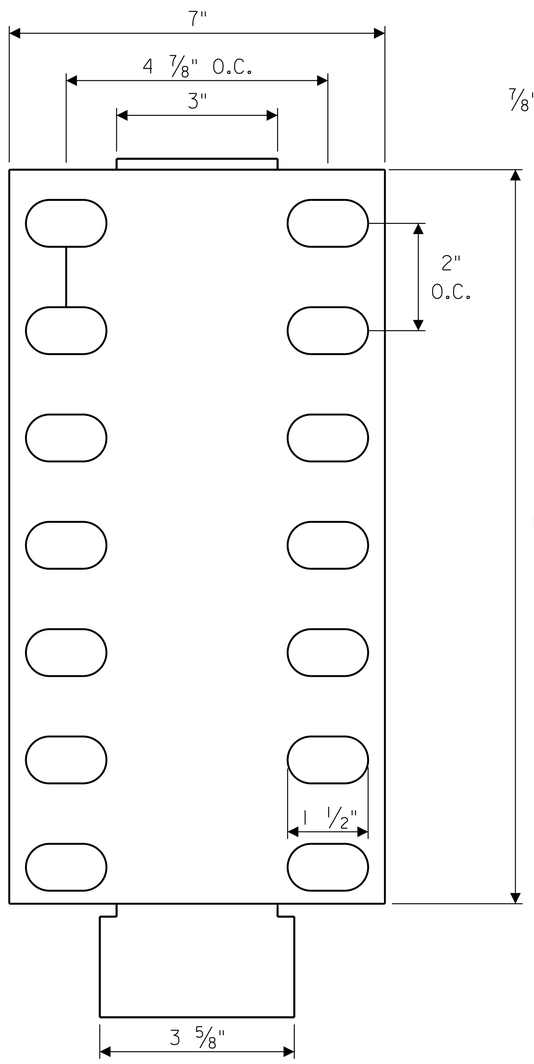

FRONT

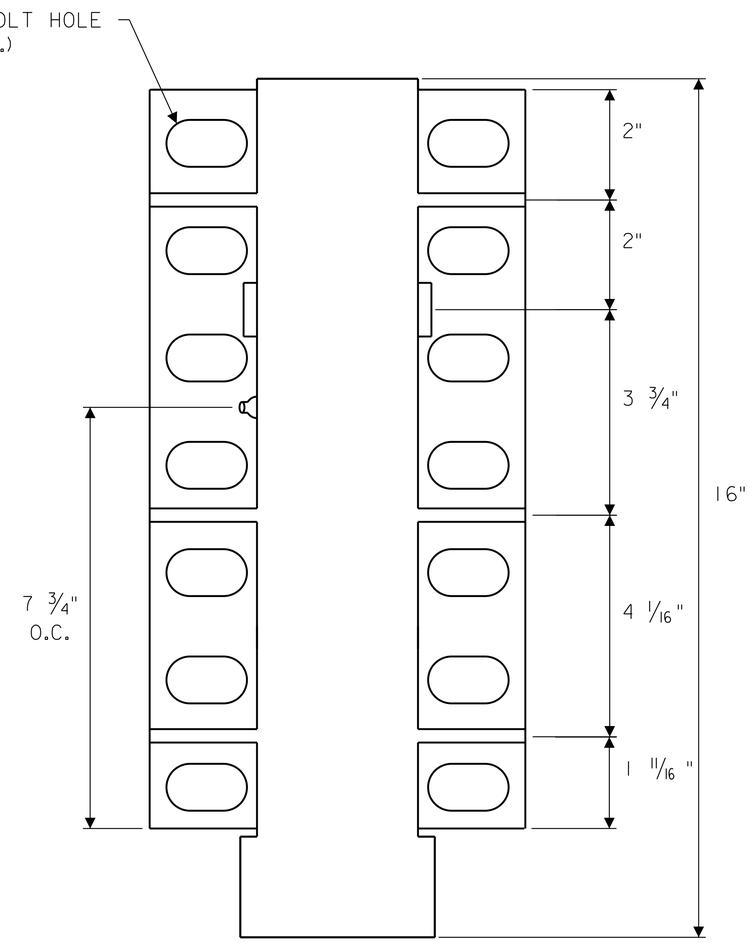

REAR

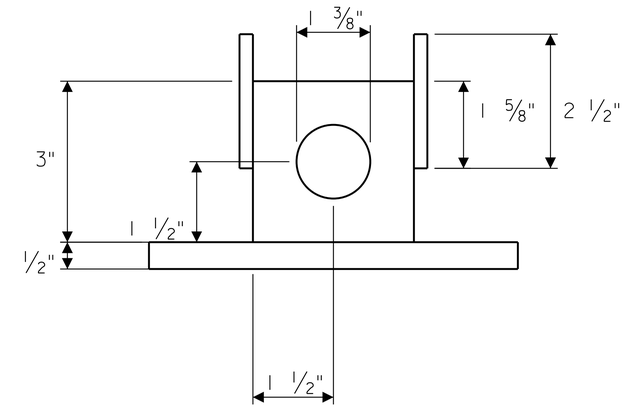

TOP

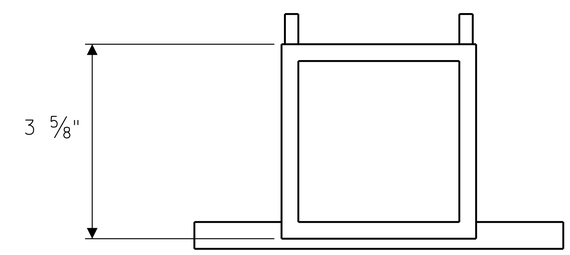

BOTTOM

NOTE:

1. FOR SIDE VIEW OF CASTER HOUSING, SEE SSP-14.

NEW JERSEY TURNPIKE AUTHORITY
MAINTENANCE DEPARTMENT
STANDARD SNOW PLOW DETAILS

CASTER HOUSING

OFFICE OF THE DIRECTOR OF MAINTENANCE
WOODBRIDGE, NEW JERSEY

DRAWING
SSP-13

PROCUREMENT NO.:

PRICE LINES:

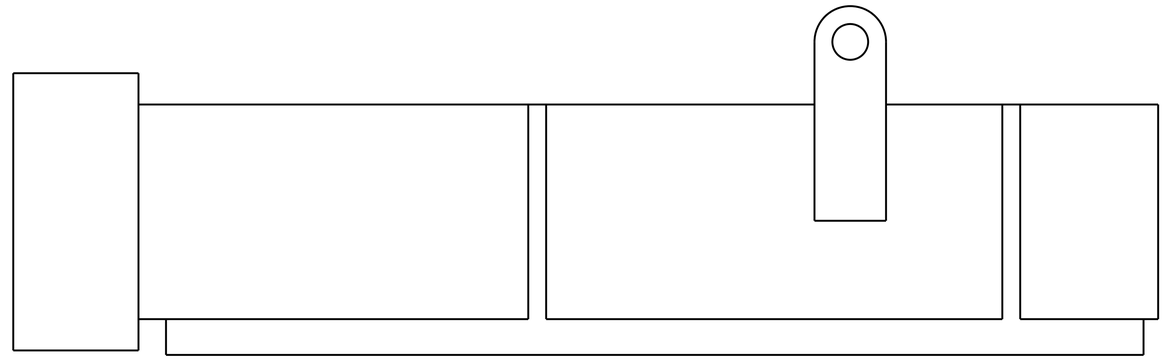

SIDE - LEFT

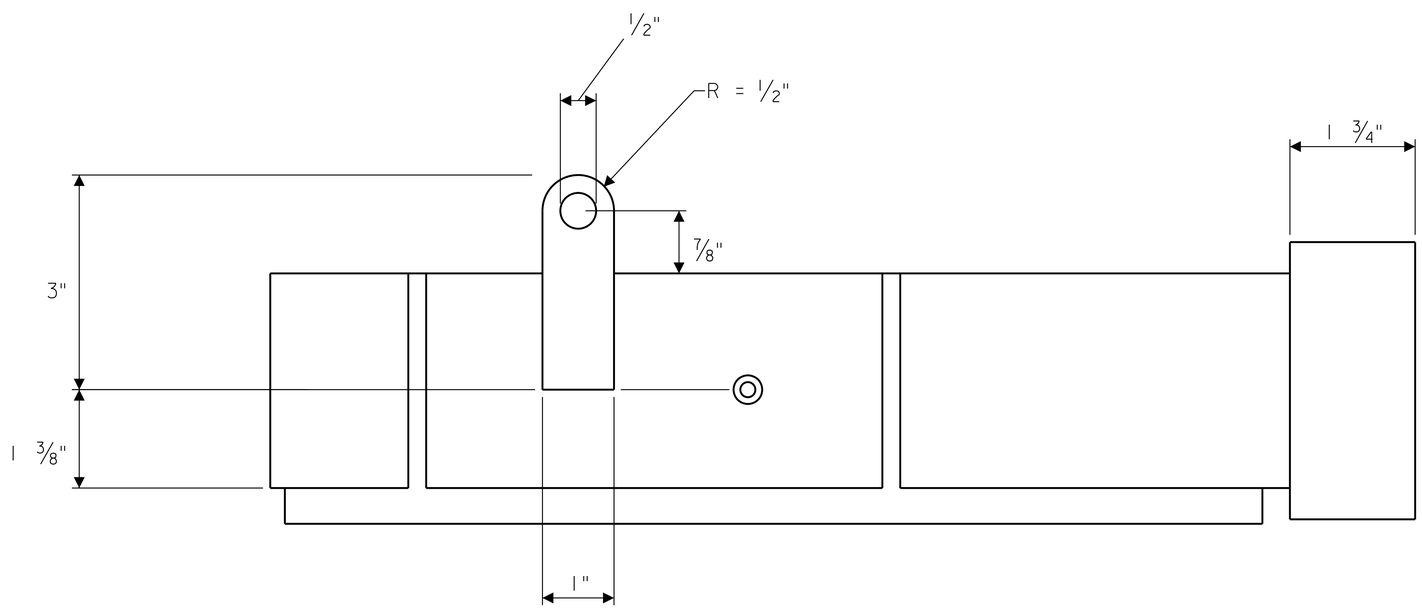

SIDE - RIGHT

NEW JERSEY TURNPIKE AUTHORITY
MAINTENANCE DEPARTMENT
STANDARD SNOW PLOW DETAILS

CASTER HOUSING - SIDE VIEWS

OFFICE OF THE DIRECTOR OF MAINTENANCE
WOODBRIDGE, NEW JERSEY

DRAWING
SSP-14

PROCUREMENT NO.:

PRICE LINES:

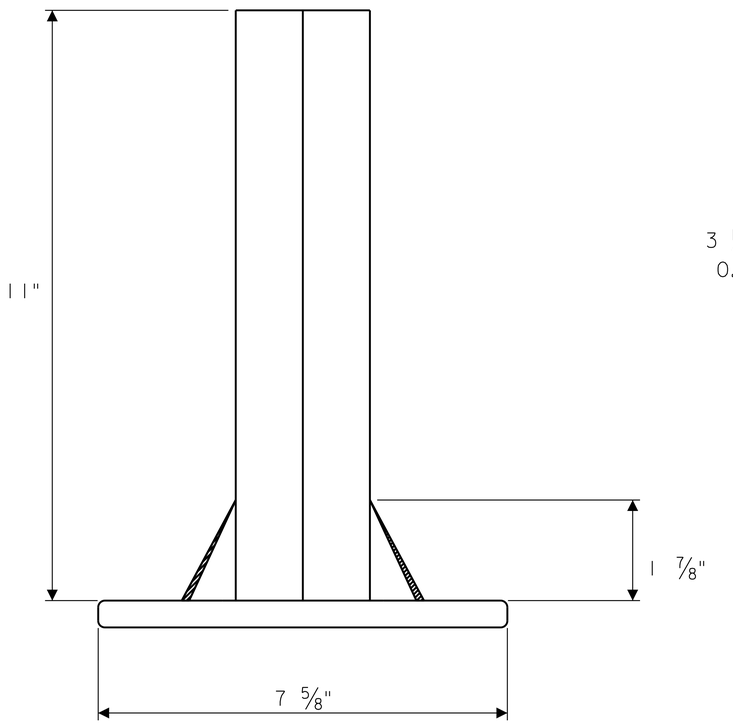

SIDE

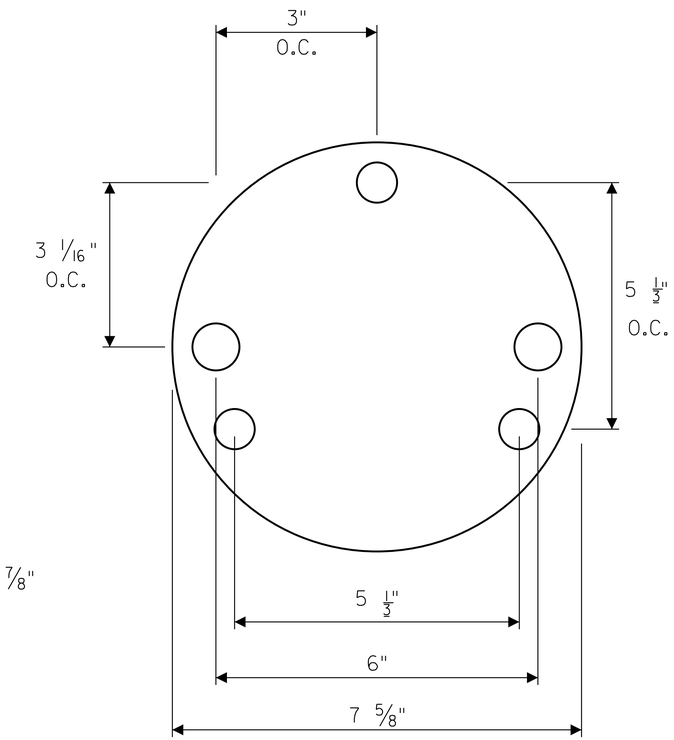

BOTTOM

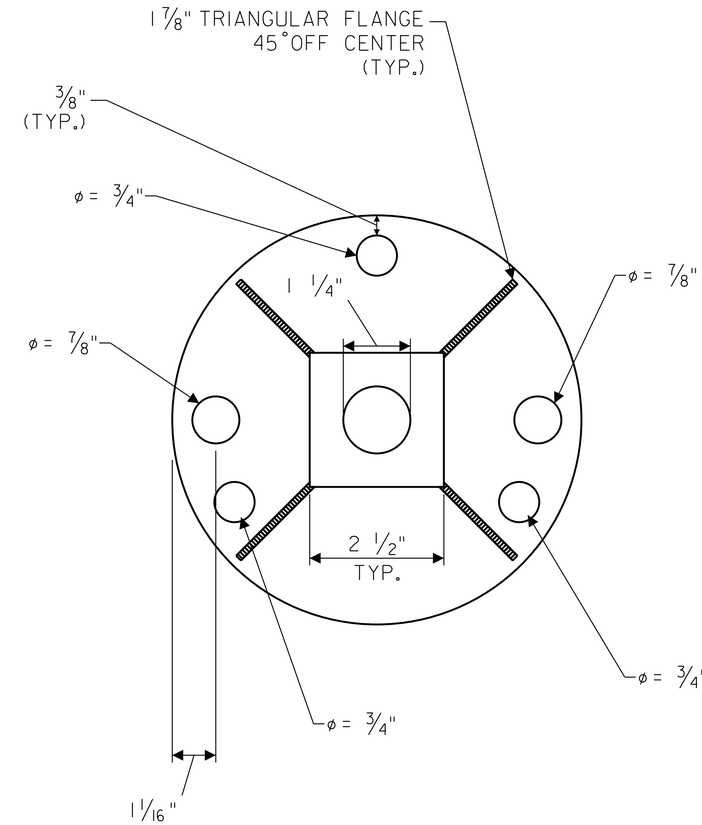

TOP

NOTE:

1. 3/8" EDGE DISTANCE IS TYPICAL FOR ALL BOLT HOLES

NEW JERSEY TURNPIKE AUTHORITY
MAINTENANCE DEPARTMENT
STANDARD SNOW PLOW DETAILS

CASTER PISTON

OFFICE OF THE DIRECTOR OF MAINTENANCE
WOODBRIDGE, NEW JERSEY

DRAWING
SSP-15

PROCUREMENT NO.:

PRICE LINES:

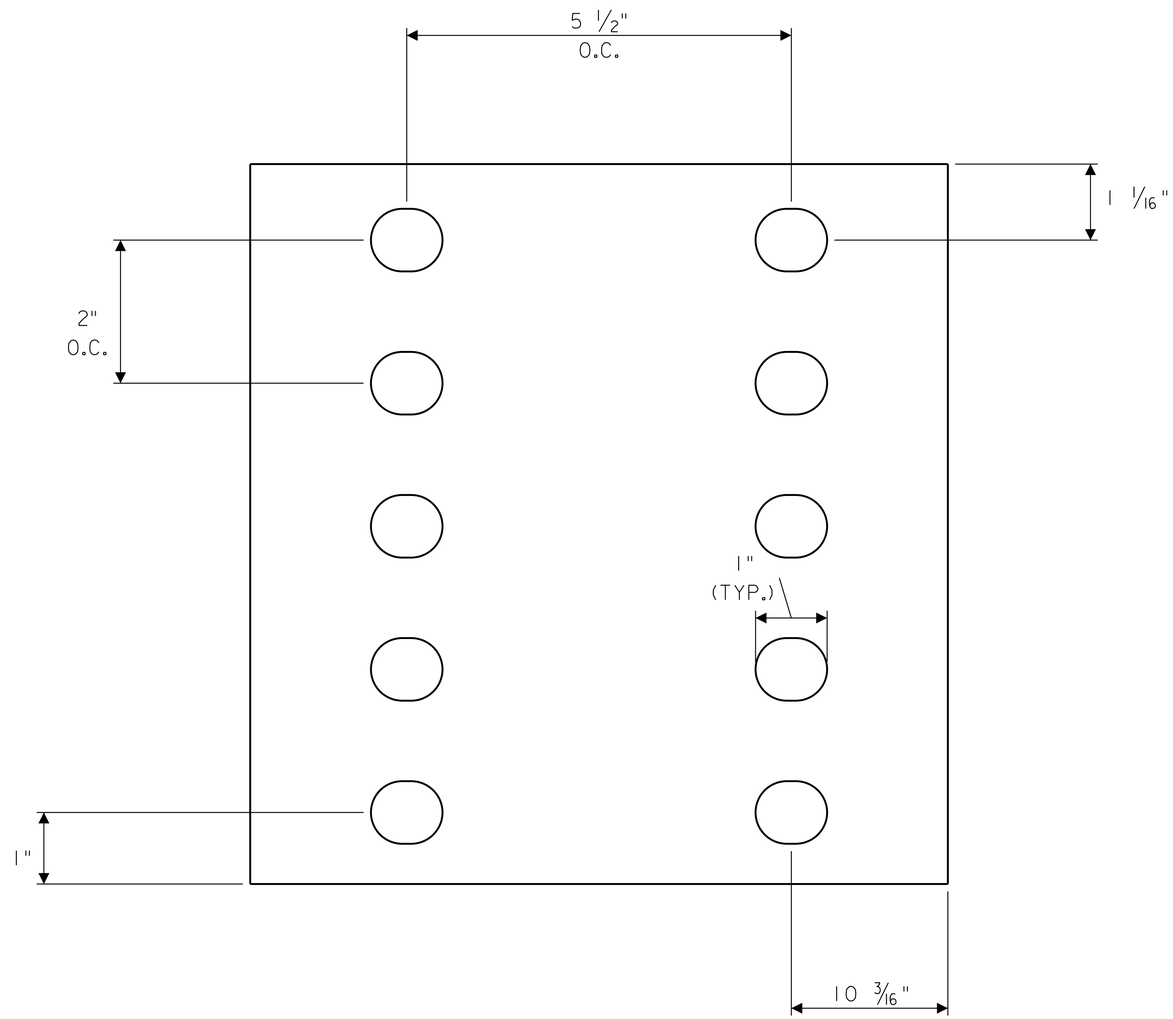

FRONT

NEW JERSEY TURNPIKE AUTHORITY
MAINTENANCE DEPARTMENT
STANDARD SNOW PLOW DETAILS

CASTER MOUNTING PLATE

OFFICE OF THE DIRECTOR OF MAINTENANCE
WOODBRIDGE, NEW JERSEY

DRAWING
SSP-16

PROCUREMENT NO.:

PRICE LINES:

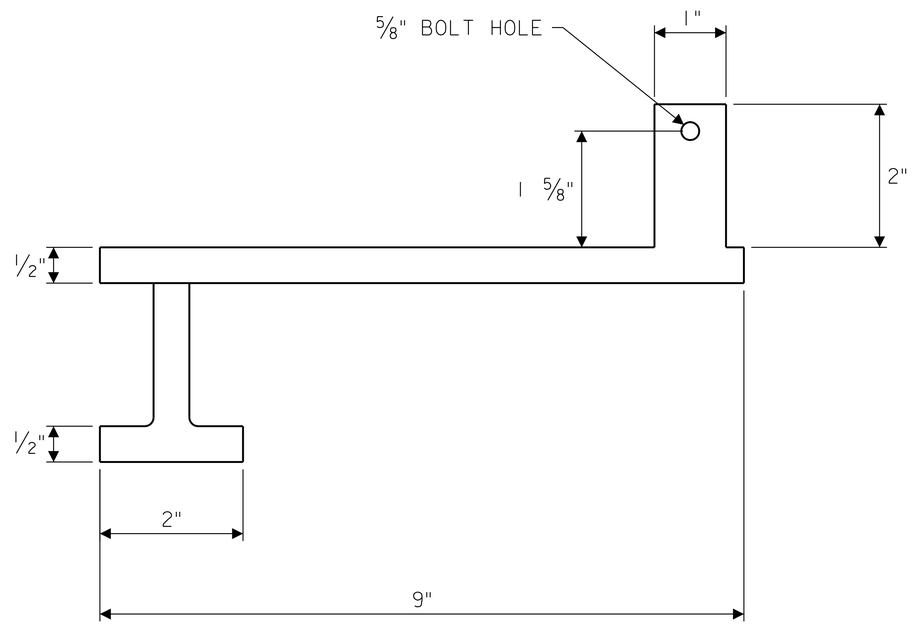

SIDE

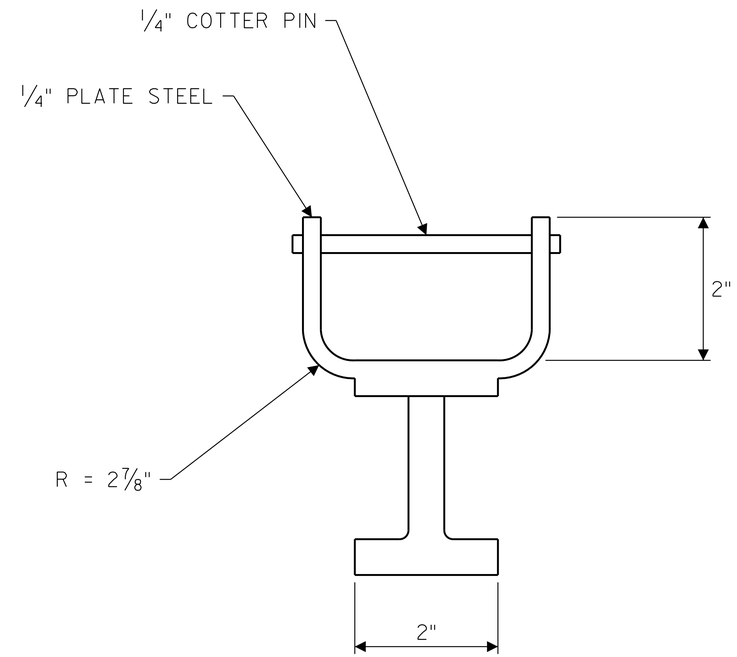

FRONT

NEW JERSEY TURNPIKE AUTHORITY
MAINTENANCE DEPARTMENT
STANDARD SNOW PLOW DETAILS

CASTER HOUSING HANDLE

OFFICE OF THE DIRECTOR OF MAINTENANCE
WOODBRIDGE, NEW JERSEY

DRAWING
SSP-17

PROCUREMENT NO.:

PRICE LINES:

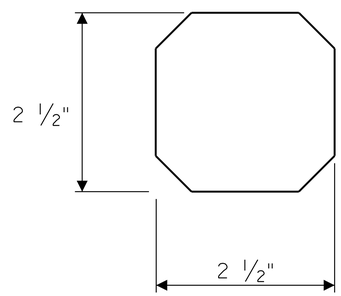

TOP

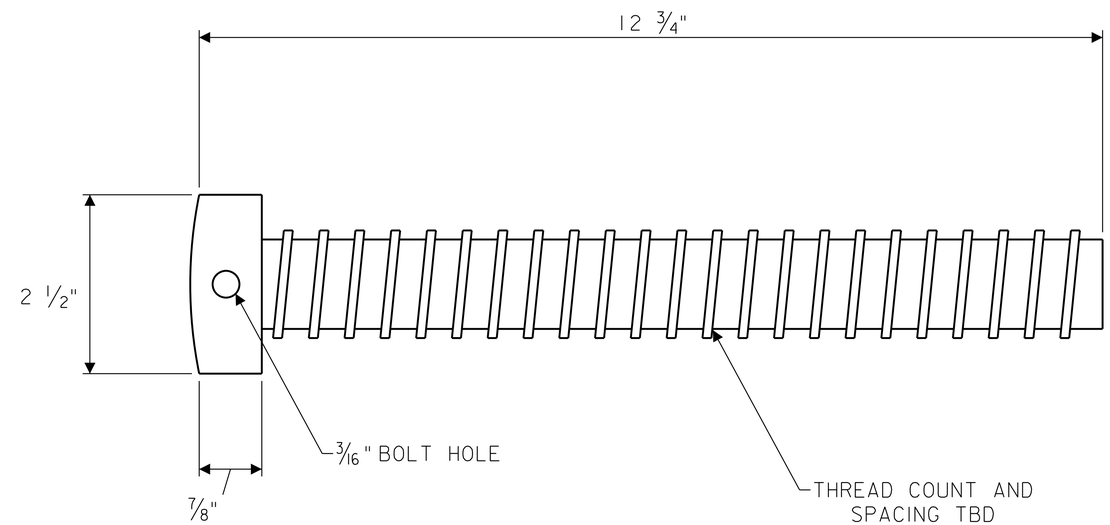

SIDE

NEW JERSEY TURNPIKE AUTHORITY
MAINTENANCE DEPARTMENT
STANDARD SNOW PLOW DETAILS

CASTER BOLT

OFFICE OF THE DIRECTOR OF MAINTENANCE
WOODBRIDGE, NEW JERSEY

DRAWING
SSP-18

PROCUREMENT NO.:

PRICE LINES:

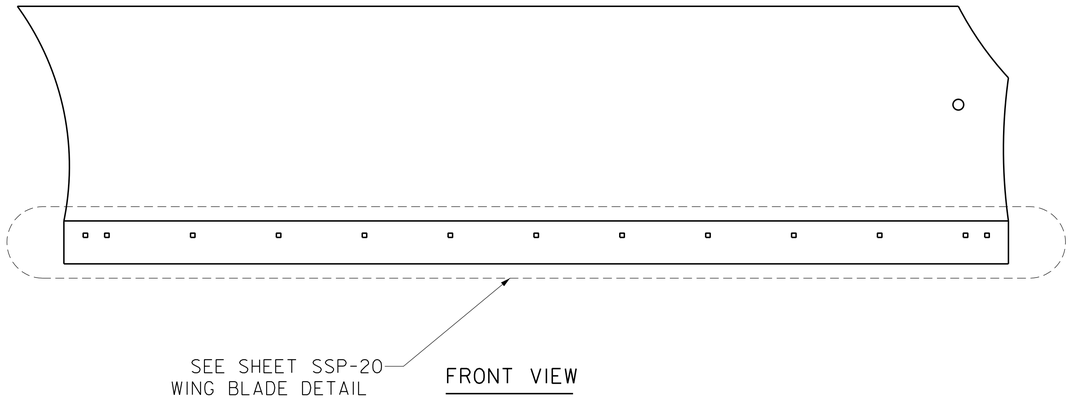

FRONT VIEW

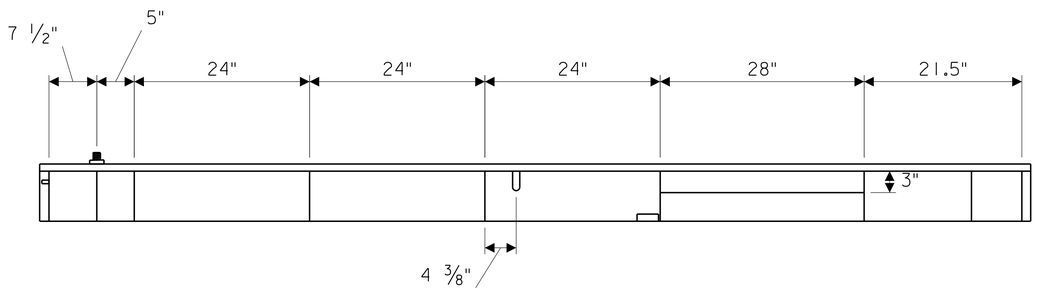

TOP VIEW

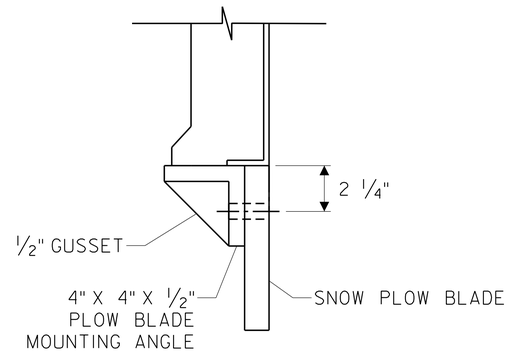

DETAIL "A" -
BLADE REINFORCEMENT

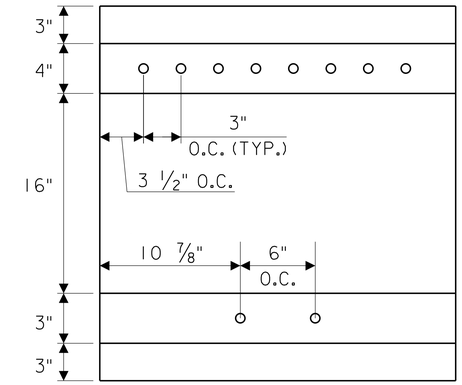

DETAIL "B"

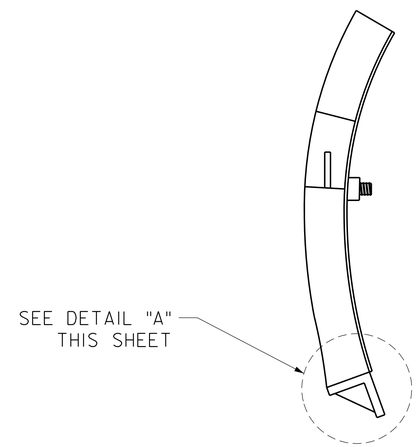

PROFILE VIEW

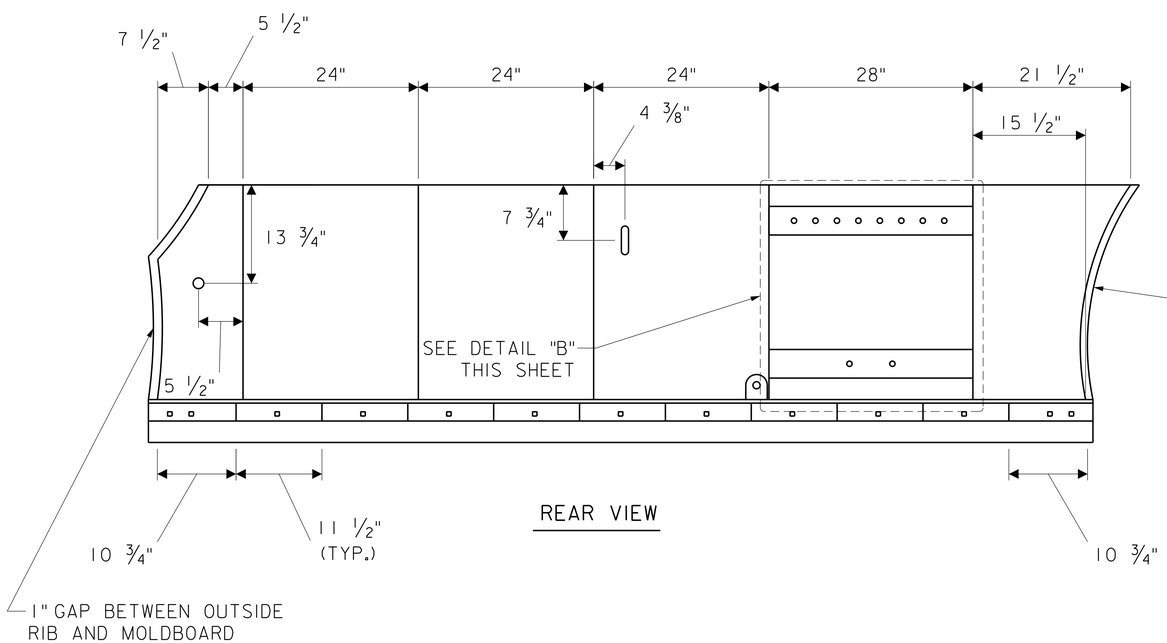

REAR VIEW

NOTE:

1. ALL DIMENSIONS ARE TAKEN BETWEEN RIB SPACES AND DO NOT ACCOUNT FOR 1/2" RIB WIDTH
2. ALL DIMENSIONS ARE TAKEN BETWEEN GUSSET SPACES AND DO NOT ACCOUNT FOR 1/2" GUSSET WIDTH
3. MOLDBOARD PLOW BLADE MOUNTING ANGLE DRILLED TO ACCEPT STANDARD AASHTO HIGHWAY PUNCH, UNLESS OTHERWISE NOTED.

NEW JERSEY TURNPIKE AUTHORITY
MAINTENANCE DEPARTMENT
STANDARD SNOW PLOW DETAILS

11' WING MOLDBOARD

OFFICE OF THE DIRECTOR OF MAINTENANCE
WOODBRIDGE, NEW JERSEY

DRAWING
SSP-19

PROCUREMENT NO.:

PRICE LINES:

SECTION A-A

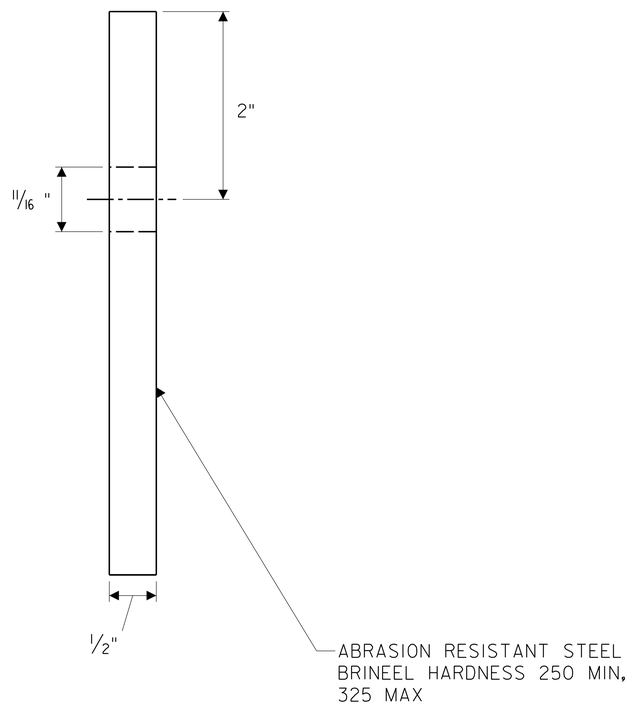

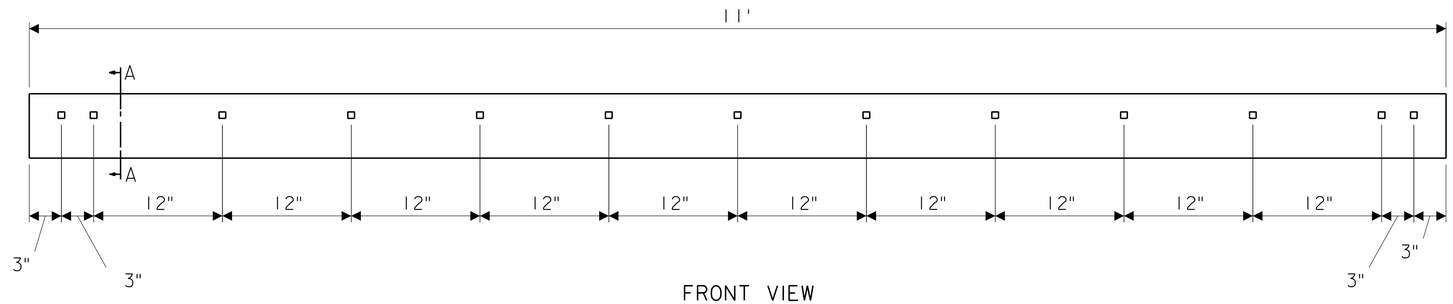

FRONT VIEW

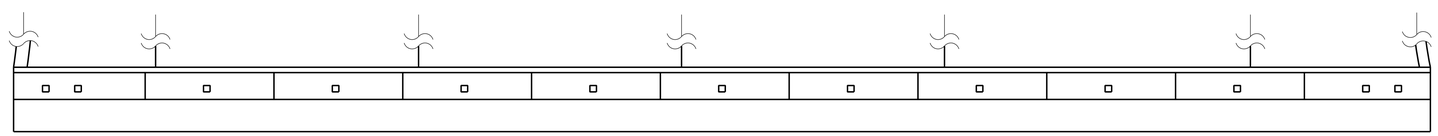

REAR VIEW -
INSTALLED

NOTE:

1. MOUNTING HOLES SPACED TO CONFORM TO AASHTO HIGHWAY PUNCH MOLDBOARDS.

NEW JERSEY TURNPIKE AUTHORITY
MAINTENANCE DEPARTMENT
STANDARD SNOW PLOW DETAILS

11' WING
SNOW PLOW BLADE

OFFICE OF THE DIRECTOR OF MAINTENANCE
WOODBRIDGE, NEW JERSEY

DRAWING
SSP-20

PROCUREMENT NO.:

PRICE LINES:

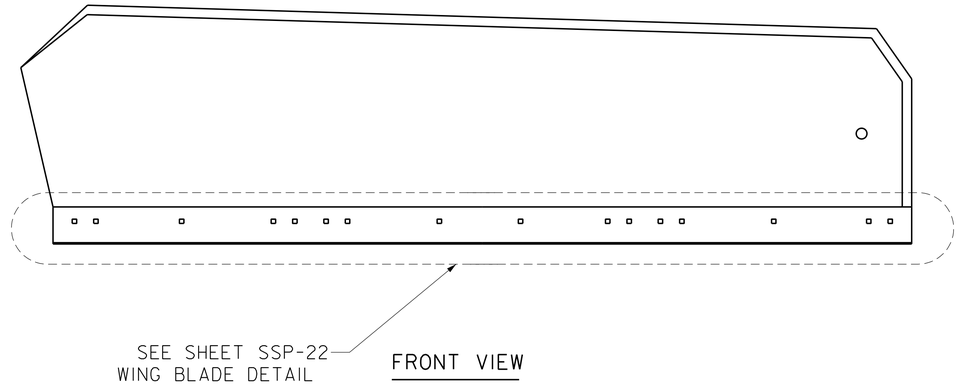

FRONT VIEW

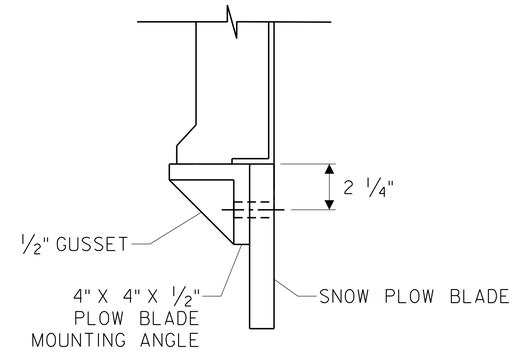

DETAIL "A" -
BLADE REINFORCEMENT

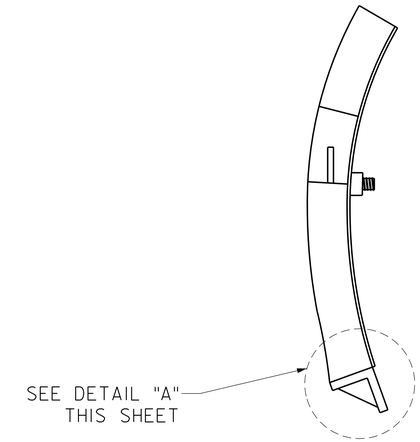

PROFILE VIEW

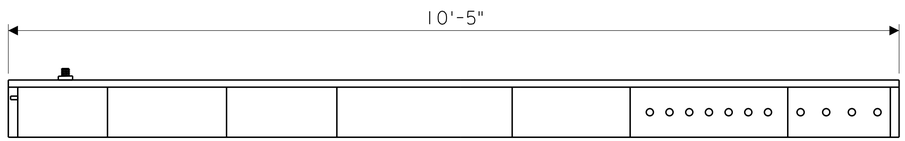

TOP VIEW

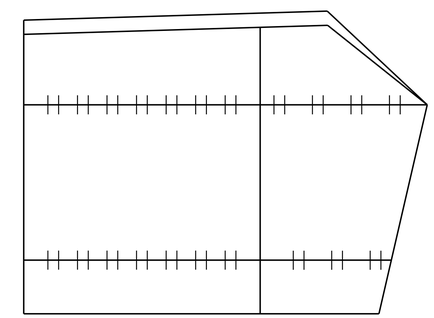

DETAIL "B"

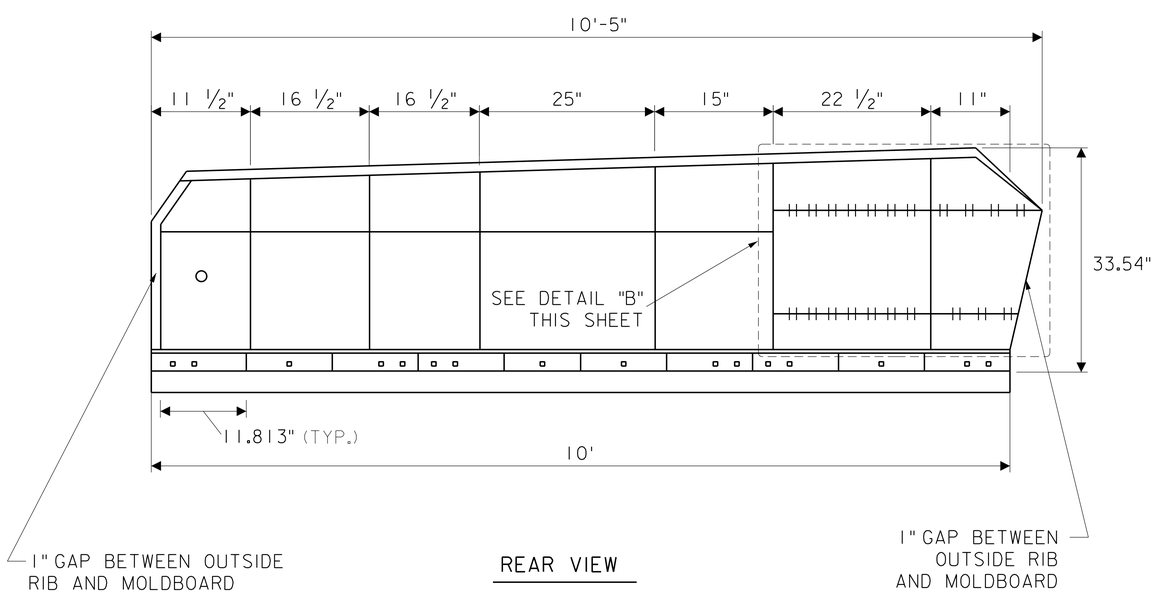

REAR VIEW

NOTE:

1. ALL DIMENSIONS ARE TAKEN BETWEEN RIB SPACES AND DO NOT ACCOUNT FOR 1/2" RIB WIDTH
2. ALL DIMENSIONS ARE TAKEN BETWEEN GUSSET SPACES AND DO NOT ACCOUNT FOR 1/2" GUSSET WIDTH
3. MOLDBOARD PLOW BLADE MOUNTING ANGLE DRILLED TO ACCEPT STANDARD AASHTO HIGHWAY PUNCH, UNLESS OTHERWISE NOTED.

NEW JERSEY TURNPIKE AUTHORITY
MAINTENANCE DEPARTMENT
STANDARD SNOW PLOW DETAILS

10' WING MOLDBOARD

OFFICE OF THE DIRECTOR OF MAINTENANCE
WOODBRIDGE, NEW JERSEY

DRAWING
SSP- 21

PROCUREMENT NO.:

PRICE LINES:

SECTION A-A

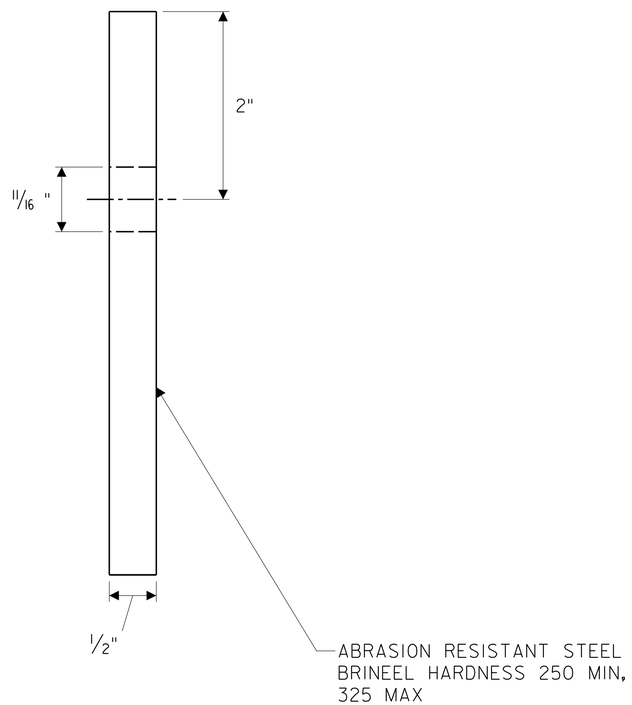

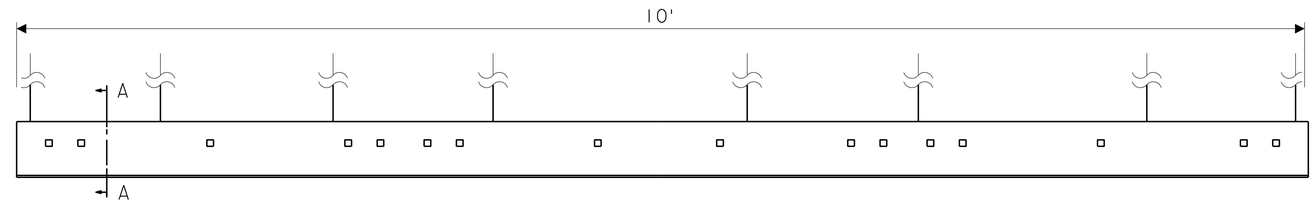

FRONT VIEW

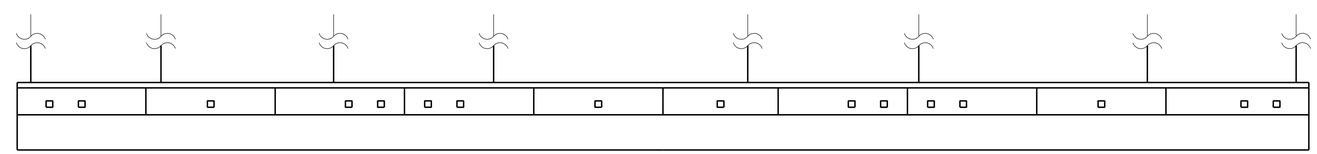

REAR VIEW -
INSTALLED

NOTE:

1. MOUNTING HOLES SPACED TO CONFORM TO AASHTO HIGHWAY PUNCH MOLDBOARDS.

NEW JERSEY TURNPIKE AUTHORITY
MAINTENANCE DEPARTMENT
STANDARD SNOW PLOW DETAILS

10' WING
SNOW PLOW BLADE

OFFICE OF THE DIRECTOR OF MAINTENANCE
WOODBRIDGE, NEW JERSEY

DRAWING
SSP-22

PROCUREMENT NO.:

PRICE LINES:

89"X8"X3/4" BLADE

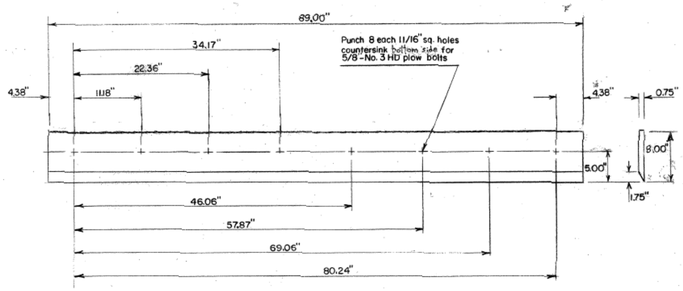

84"X8"X3/4" BLADE

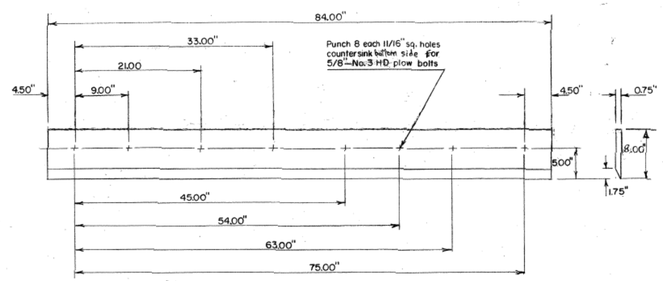

96"X8"X3/4" BLADE

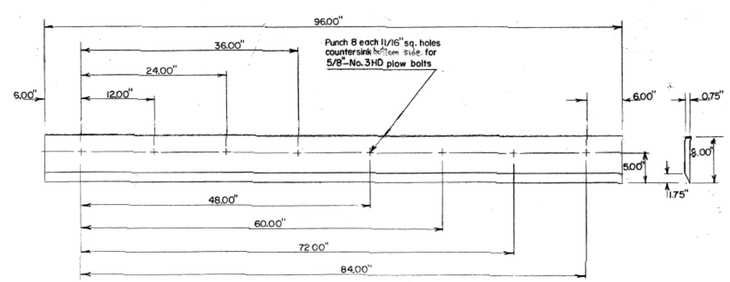

101" X 8" X 3/4" BLADE

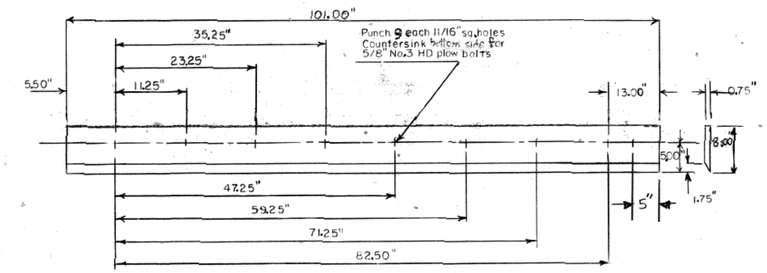

112.75" X 8" X 1" BLADE
for
TROJAN SIDE DUMP FRONT-END LOADERS

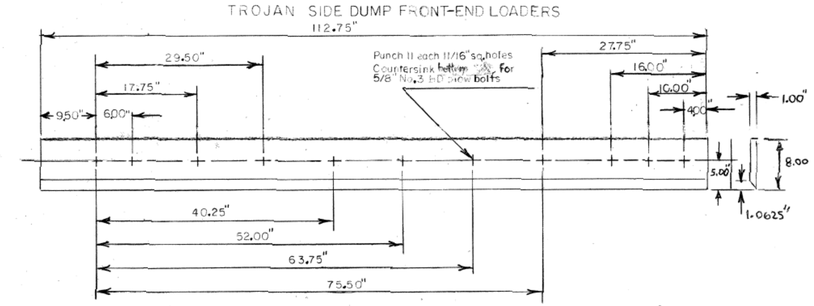

106" x 8" x 3/4" BLADE

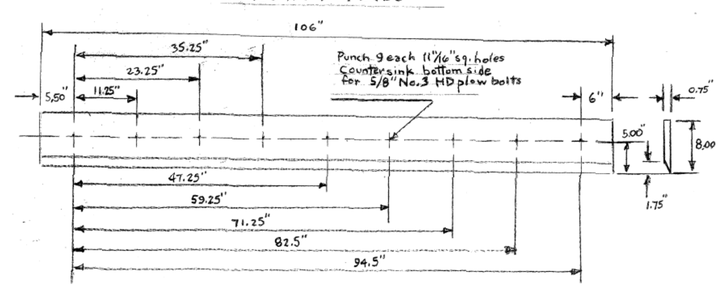

SPECIFICATION:

Material used in these blades must conform to the following chemical analysis and physical properties:

Carbon	.38 Min.	.43 Max.
Manganese	.75 Min.	1.00 Max.
Sulphur		.04 Max
Phosphorous		.04 Max.
Silicon	.20 Min.	.35 Max.
Chromium	.80 Min.	1.10 Max.
Molybdenum	.15 Min.	.25 Max.
Brinell Hardness:	350-450	

NOTE: A certificate of analysis is to furnished with blades when delivered.

NEW JERSEY TURNPIKE AUTHORITY
MAINTENANCE DEPARTMENT
STANDARD SNOW PLOW DETAILS

8" BLADES FOR ARTICULATING LOADERS

THIS DRAWING IS BASED UPON NEW JERSEY DEPARTMENT OF TRANSPORTATION - DIVISION OF CONSTRUCTION AND MAINTENANCE - BUREAU OF EQUIPMENT - DRAWING NO. 3-113 - DATED OCTOBER 22, 1997; LAST REVISED MARCH. 20, 2001 (REV. #1)

OFFICE OF THE DIRECTOR OF MAINTENANCE
WOODBRIDGE, NEW JERSEY

DRAWING
SPP-3-113-1

PROCUREMENT NO.:

PRICE LINES:

119" x 8" x 3/4" BLADE for 2.75 YARD VME SIDE DUMP LOADER

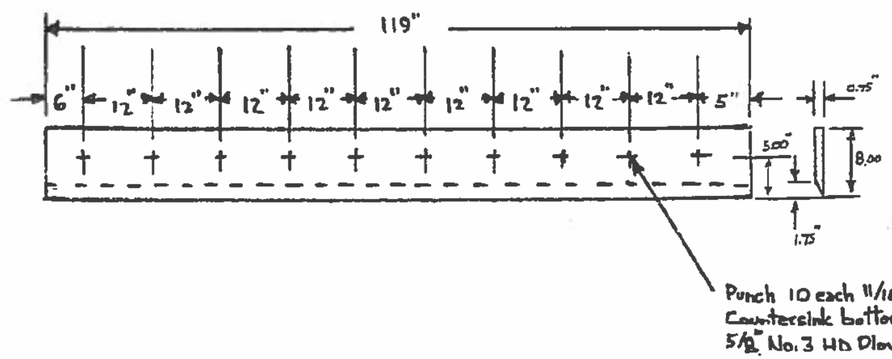

SPECIFICATION:

Material used in these blades must conform to the following chemical analysis and physical properties:

Carbon	.38 Min.	.43 Max.
Manganese	.75 Min.	1.00 Max.
Sulphur		.04 Max
Phosphorous		.04 Max.
Silicon	.20 Min.	.35 Max.
Chromium	.80 Min.	1.10 Max.
Molybdenum	.15 Min.	.25 Max.
Brinell Hardness:	350-450	

NOTE: A certificate of analysis is to furnished with blades when delivered.

NEW JERSEY TURNPIKE AUTHORITY
MAINTENANCE DEPARTMENT
STANDARD SNOW PLOW DETAILS

8" BLADES FOR ARTICULATING LOADERS

THIS DRAWING IS BASED UPON NEW JERSEY DEPARTMENT OF TRANSPORTATION - DIVISION OF CONSTRUCTION AND MAINTENANCE - BUREAU OF EQUIPMENT - DRAWING NO. 3-114 - DATED NOVEMBER 16, 1999; LAST REVISED NOV. 16, 1999

OFFICE OF THE DIRECTOR OF MAINTENANCE
WOODBRIDGE, NEW JERSEY

DRAWING
SPP-3-114

PROCUREMENT NO.:

PRICE LINES:

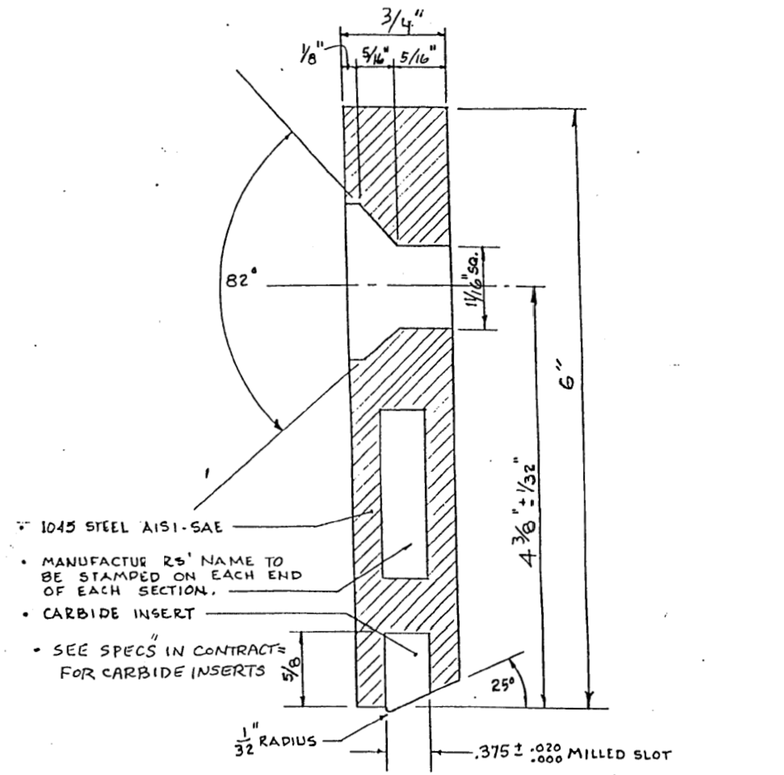

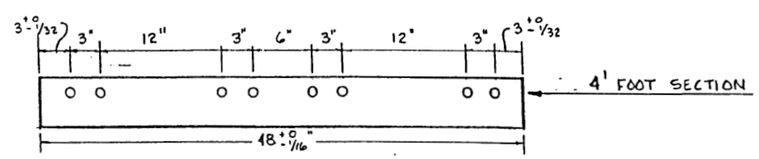

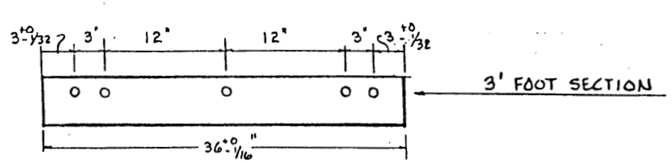

NEW JERSEY TURNPIKE AUTHORITY
MAINTENANCE DEPARTMENT
STANDARD SNOW PLOW DETAILS

CUTTING EDGE, SECTIONAL CARBIDE
TIPPED SNOW PLOW ~ 3 & 4 FOOT SECTIONS

THIS DRAWING IS BASED UPON NEW JERSEY DEPARTMENT OF TRANSPORTATION - DIVISION OF CONSTRUCTION AND MAINTENANCE - BUREAU OF EQUIPMENT - DRAWING NO. 4-113 - DATED NOVEMBER 21, 1997; LAST REVISED NOV. 21, 1997

OFFICE OF THE DIRECTOR OF MAINTENANCE
WOODBRIDGE, NEW JERSEY

DRAWING
SPP-4-113

PROCUREMENT NO.:

PRICE LINES:

NOTES

1. ALL FILLET WELDS 3/16" UNLESS OTHERWISE SPECIFIED.
2. ALL RIBS & FLAT PLATES HAVE FILLET WELDS, 2" WELD LENGTH & 6" PITCH.
3. FOR CARBIDE EDGE, SEE N.J.D.O.T., BUREAU OF EQUIP. DRAWING NO. 4-113.
4. MOLDBOARD SKIN MUST EXTEND TO BOTTOM EDGE OF EDGE REINFORCING PLATE. (ITEM NO. 4) TACK WELD ONLY.
5. MOLDBOARD SKIN TO BE SMOOTH ROLLED OR BRAKE FORMED
6. FRONT TWO HOLES ON END PLATE TO BE DRILLED IN LINE WITH 3/4" SQ. PUNCHED HOLES OF INNER NOSE PIECE. VERTICAL LOCATION OF REAR HOLE TO BE ESTABLISHED AFTER CONNECTING OUTER NOSE PIECE.
7. LAST TWO BOLTS OF RIGHT END CONNECTING BLADE & ACCESSORY TO MOLDBOARD ARE TO BE 2-1/2" LG. CARRIAGE BOLTS.
8. SNOW SHIELD AND BACKING PLATE TO BE ATTACHED WITH 1/2" BOLTS AND NUTS

ITEM NO.	NAME	PC'S REQ'D	MAT'L	SIZE
1	Moldboard	1	HRS	10 GA x 69 1/8 x 149
2	Edge	1	Stock	1/2 x 6 x 120, H.C. SAE 1091
3	Nose Assembly	1		
4	Edge Reinforcing Plate	1	H.R.S.	1/2"x10"x Entire Length
5	End Plate	1	HRS	1/4 x 17-1/2 x 33
6	Vertical Rib	1	HRS	1/2 x 15 1/2 x 32 1/4
7	Vertical Rib	1	HRS	1/2 x 16 1/2 x 32 7/8
8	Vertical Rib	1	HRS	1/2 x 18 1/8 x 33
9	Vertical Rib	1	HRS	1/2 x 18 1/2 x 39 5/8
10	Vertical Rib	1	HRS	1/2 x 20 1/4 x 45 13/16
11	Vertical Rib	1	HRS	1/2 x 21 x 46 1/16
12	Horizontal Rib	1	HRS	3/8 x 2 1/2 x 23 1/2
13	Horizontal Rib	4	HRS	3/8 x 2 1/2 x 37 1/4
14	Horizontal Rib	1	HRS	3/8 x 2 1/2 x 22 1/2
15	Horizontal Rib	1	HRS	3/8 x 2 1/2 x 32
16	Short Ribs	5	HRS	3/8 x 2 1/2 x 4 1/8
17	Short Rib	1	HRS	3/8 x 2-1/2 x 4 1/8
18	Boxing Plate	1	HRS	1/4 x 4 x 11 LG
19	Flat Plate	12	HRS	1/2" x 1 1/2 x 2 1/2
20	Horizontal Rib	1	HRS	3/8 x 2 1/2 x 20 1/2
22	Rod	1	HRS	1/2 DIA x 70" LG
23	Shoe Assembly	1		
24	Hex Hd Bolts	6	STD	1 1/4-7 x 7"
25	Hex Nuts	6	STD	1 1/4-7
26	Lock Washers	6	STD	1 1/4
27	Hex Hd Bolt	1	STD	7/8-9 x 7"
28	Hex Nut	1	STD	7/8-9
29	Lock Washer	1	STD	7/8
30	Bolts Carriage	10	STD	5/8-11 x 2
31	Hex Nuts	10	STD	5/8-11
32	Lock Washers	10	STD	5/8
33	EDGE	1	RUBBER	1 1/2 x 10 x 9'-10"
34	HEX.HD. BOLTS	2	STD.	5/8"x 11 x 6" LG.
35	HEX NUTS	2	STD.	5/8"x 11
36	LOCK WASHERS	2	STD.	5/8"
37	REINFORCING PLATE	1	H.R.S.	3/8" x 4"
38	TRIP SPRING HEAD SPACER PLATE	2	H.R.S.	3/8" x 6" LG.
39	SNOW SHIELD	1	RUBBER BELTING	132" x 12" x 3/8"
40	BACKING PLATE	1	H.R.S.	132" x 2" x 1/4"

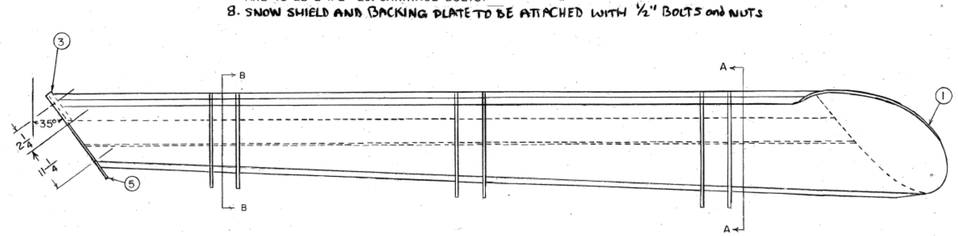

NEW JERSEY TURNPIKE AUTHORITY
MAINTENANCE DEPARTMENT
STANDARD SNOW PLOW DETAILS

SNOW PLOW
MODEL O-R. 12.75 -(32, 53) - (14.75, 22.75) - 1

THIS DRAWING IS BASED UPON NEW JERSEY DEPARTMENT OF TRANSPORTATION - DIVISION OF CONSTRUCTION AND MAINTENANCE - BUREAU OF EQUIPMENT - DRAWING NO. 4-131 - DATED OCTOBER 19, 1973; LAST REVISED NOV. 16, 1999 (REV. #11)

OFFICE OF THE DIRECTOR OF MAINTENANCE
WOODBRIDGE, NEW JERSEY

DRAWING
SPP-4-131

PROCUREMENT NO.:

PRICE LINES:

NOTES:

1. ALL WELDS TO BE CONTINUOUS
2. EYE BAR AND LATCH PIN SWIVEL FOUND IN GREATER DETAIL ON DWG. NO. 4-154.

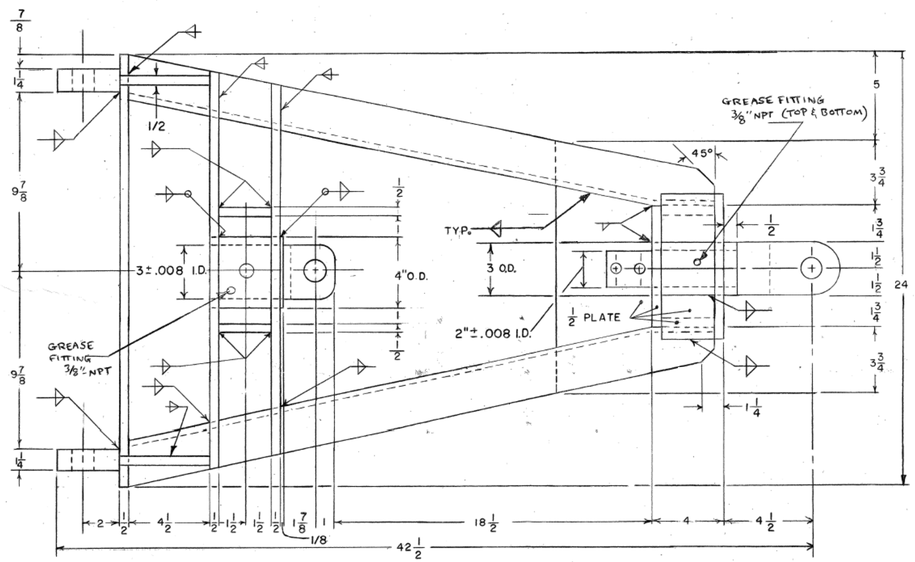

MAT'L:

CHANNEL _____ SHIP & CAR STEEL CHANNEL
PLATE _____ HOT ROLLED STRUCTURAL STEEL QUALITY
TUBING _____ COLD DRAWN SEAMLESS CARBON STEEL

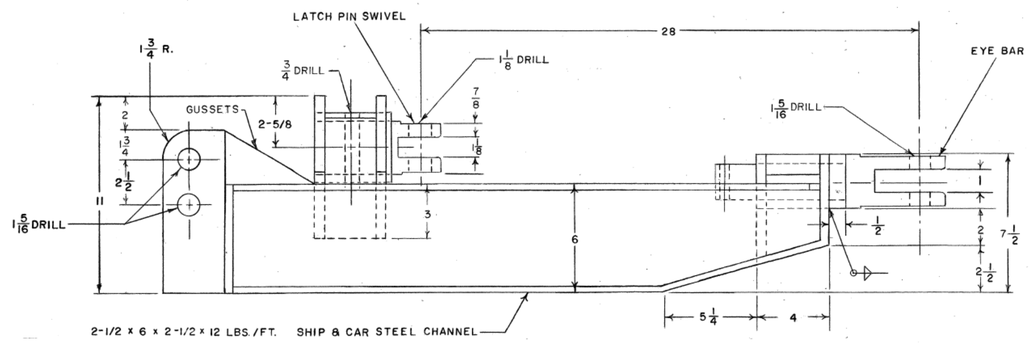

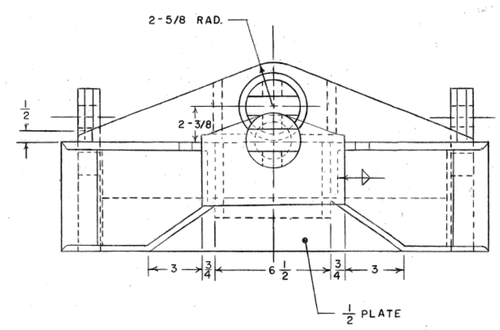

NEW JERSEY TURNPIKE AUTHORITY
MAINTENANCE DEPARTMENT
STANDARD SNOW PLOW DETAILS

LARGE SNOW PLOW PUSH BAR

THIS DRAWING IS BASED UPON NEW JERSEY DEPARTMENT OF TRANSPORTATION - DIVISION OF CONSTRUCTION AND MAINTENANCE - BUREAU OF EQUIPMENT - DRAWING NO. 4-132 - DATED OCTOBER 23, 1973; LAST REVISED SEPT. 1, 1995 (REV. #10)

OFFICE OF THE DIRECTOR OF MAINTENANCE
WOODBRIDGE, NEW JERSEY

DRAWING
SPP-4-132

PROCUREMENT NO.:

PRICE LINES:

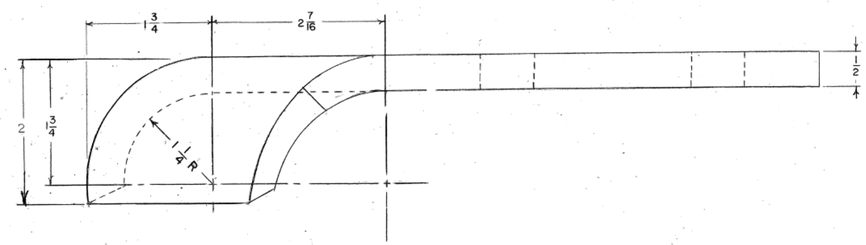

MATL:
HIGH CARBON STEEL

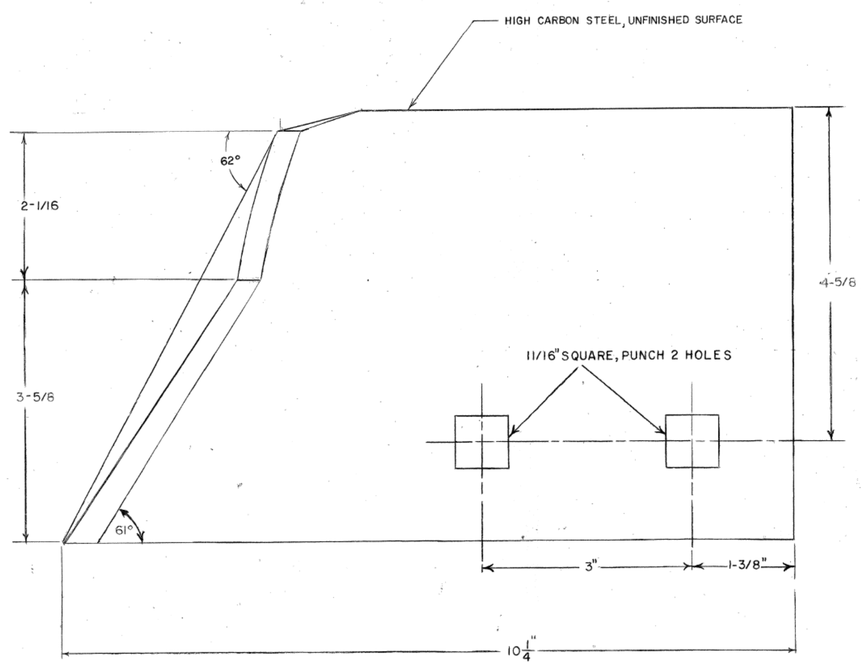

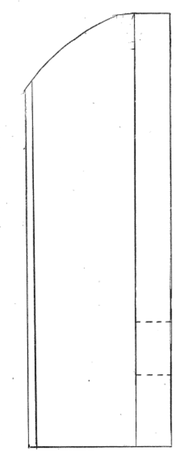

NEW JERSEY TURNPIKE AUTHORITY
MAINTENANCE DEPARTMENT
STANDARD SNOW PLOW DETAILS

CURB BUMPER GUARD

THIS DRAWING IS BASED UPON NEW JERSEY DEPARTMENT OF TRANSPORTATION - DIVISION OF CONSTRUCTION AND MAINTENANCE - BUREAU OF EQUIPMENT - DRAWING NO. 4-133 - DATED OCTOBER 25, 1973; LAST REVISED 9/11/90 (REV. #4)

OFFICE OF THE DIRECTOR OF MAINTENANCE
WOODBRIDGE, NEW JERSEY

DRAWING
SPP-4-133

PROCUREMENT NO.:

PRICE LINES:

NOTES

1. MATERIAL IS CAST STEEL.
2. $\frac{1}{8}$ ROUNDS AND FILLETS.
3. SEMICIRCLE HINGE TO BE MOUNTED TO SEMICIRCLE W/ 5/8" X 1-7/8" RIVETS, OR 5/8" FINE THREADED BOLTS, NUTS, & LOCKWASHERS W/ 1" LONG TACK WELDS.
4. FASTEN MOLDBOARD HINGE TO MOLDBOARD W/ 3/4", 10 UNC BOLTS, NUTS, AND LOCKWASHERS.

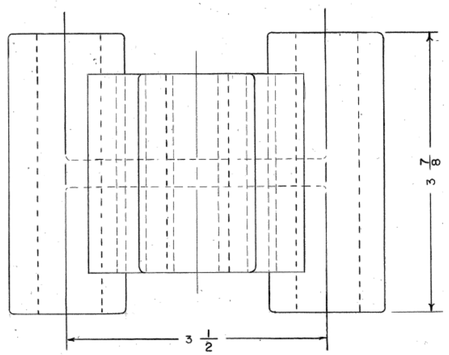

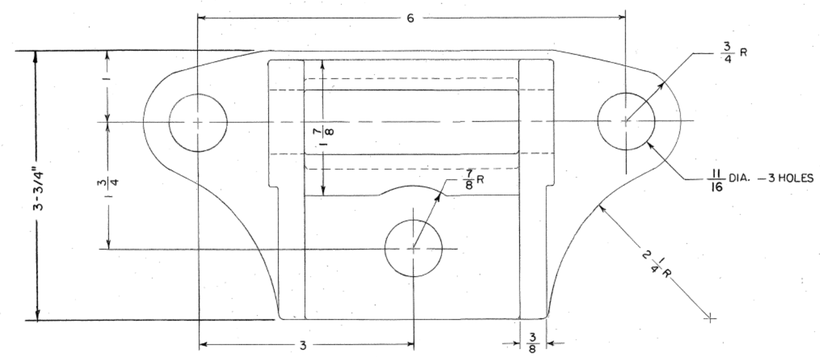

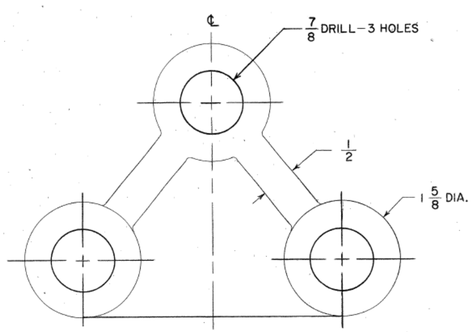

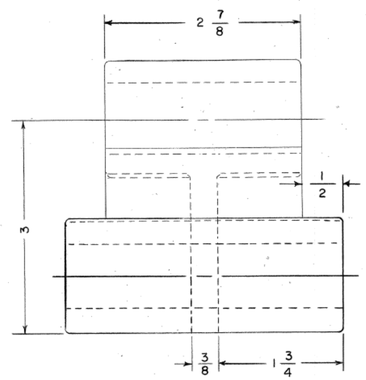

MOLDBOARD HINGE

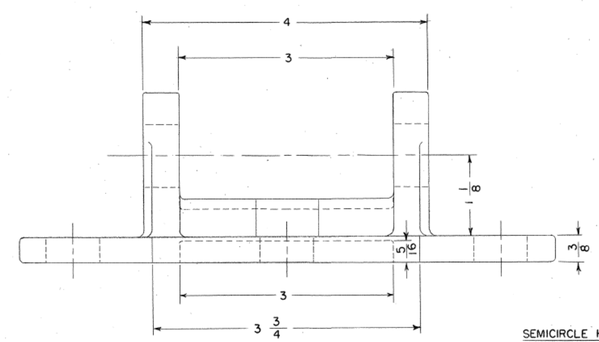

SEMICIRCLE HINGE

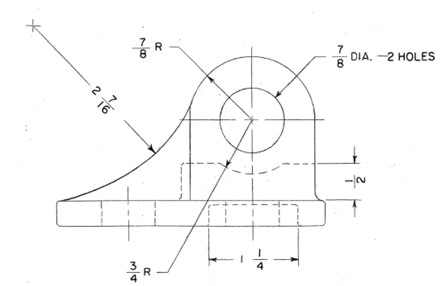

NEW JERSEY TURNPIKE AUTHORITY
MAINTENANCE DEPARTMENT
STANDARD SNOW PLOW DETAILS

MOLDBOARD HINGE
AND
SEMICIRCLE HINGE

THIS DRAWING IS BASED UPON NEW JERSEY DEPARTMENT OF TRANSPORTATION - DIVISION OF CONSTRUCTION AND MAINTENANCE - BUREAU OF EQUIPMENT - DRAWING NO. 4-135 - DATED NOVEMBER 8, 1973; LAST REVISED MARCH 1, 1984 (REV. #1)

OFFICE OF THE DIRECTOR OF MAINTENANCE
WOODBRIDGE, NEW JERSEY

DRAWING
SPP-4-135

PROCUREMENT NO.:

PRICE LINES:

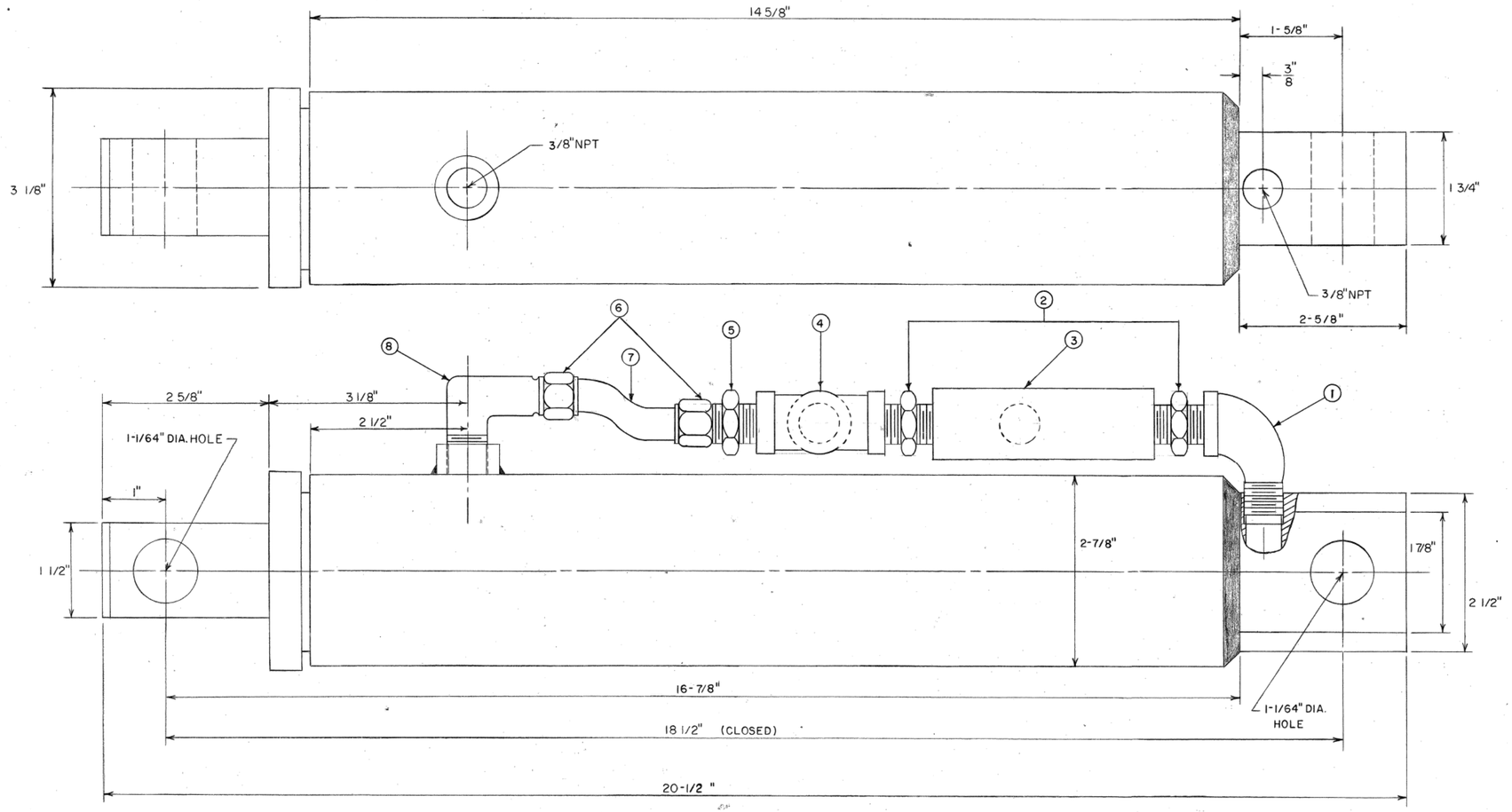

ITEM	PART	SIZE	QTY
1	STREET ELBOW	3/8" NPT, STEEL	1
2	NIPPLE	" " "	2
3	PILOT OPERATED CHECK VALVE	SEE APPLICABLE N.J.D.O.T. HYDRAULIC DWG.	1
4	TEE	3/8" NPT, STEEL	1
5	MALE CONNECTOR TUBE TO MALE	" " "	1
6	TUBE END NUTS W/SLEEVES	TO FIT TUBE	2
7	TUBING, ENDS FLARED	5/8" O.D. STN. STL.	1
8	MALE ELBOW TUBE TO MALE N.P.T.	3/8" N.P.T. STEEL	1

NOTES

1. ROD TO BE CHROME PLATED.
2. SIDEVIEW INDICATES THE NECESSARY HYDRAULIC FITTINGS TO BE INSTALLED.
3. FOR CLARIFICATION OF CYLINDER TOP VIEW, HYDRAULIC FITTINGS HAVE BEEN OMITTED.
4. ALL HYDRAULIC COMPONENTS TO HAVE A MINIMUM WORKING PRESSURE OF 2000 P.S.I.
5. CYLINDER TO HAVE 10" STROKE, AND 2-1/2" BORE.

NEW JERSEY TURNPIKE AUTHORITY
MAINTENANCE DEPARTMENT
STANDARD SNOW PLOW DETAILS

DOUBLE ACTING CYLINDER
WITH 10" STROKE

THIS DRAWING IS BASED UPON NEW JERSEY DEPARTMENT OF TRANSPORTATION - DIVISION OF CONSTRUCTION AND MAINTENANCE - BUREAU OF EQUIPMENT - DRAWING NO. 4-140 - DATED FEBRUARY, 1974; LAST REVISED JUNE 18, 1975 (REV. #2)

OFFICE OF THE DIRECTOR OF MAINTENANCE
WOODBRIDGE, NEW JERSEY

DRAWING
SPP-4-140

PROCUREMENT NO.:

PRICE LINES:

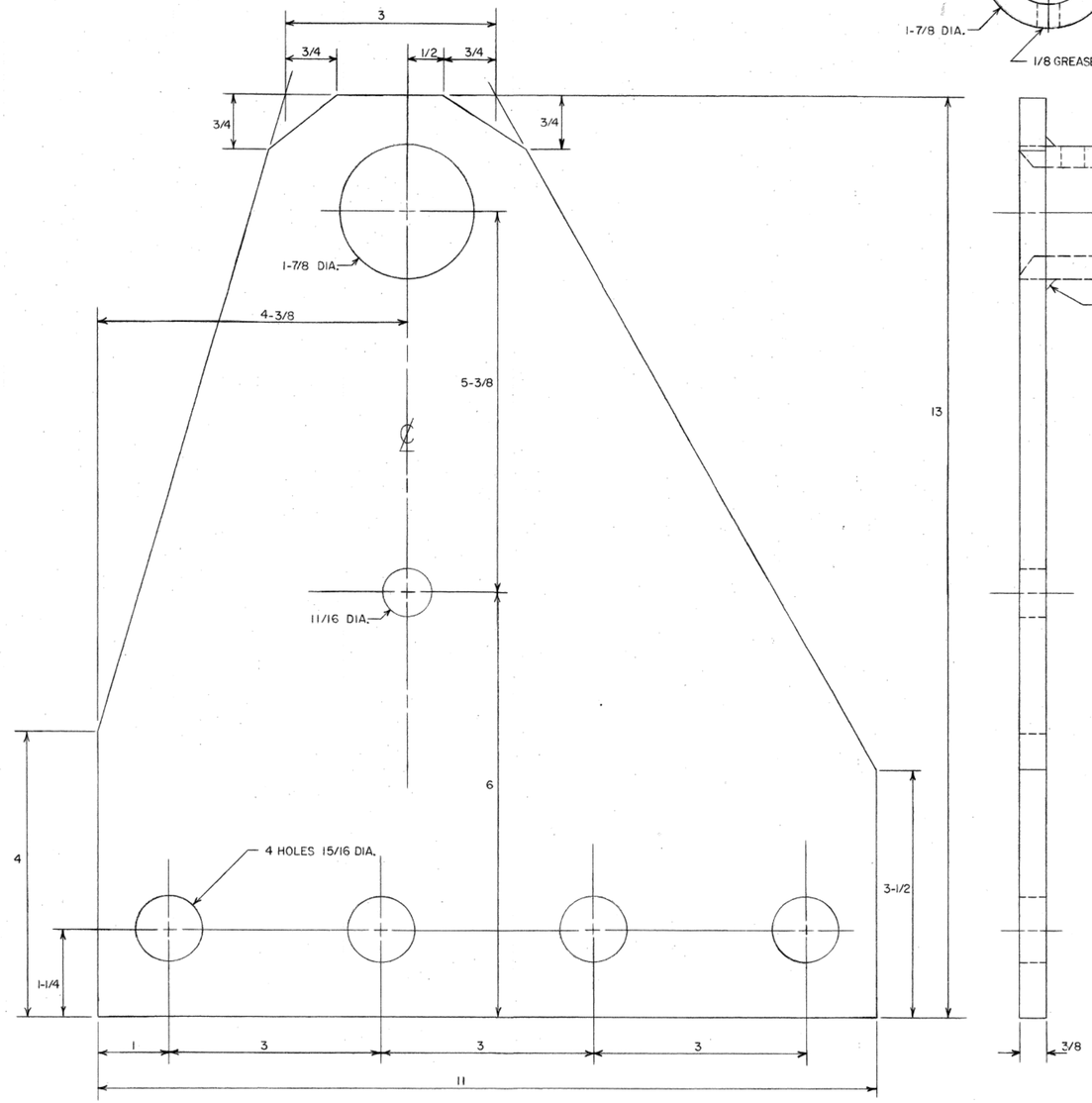

TRUNNION PLATE
(CURB SIDE)

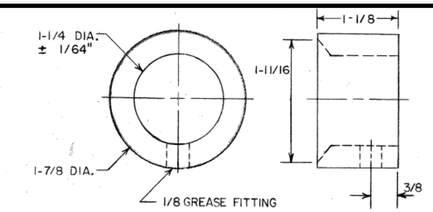

BUSHING

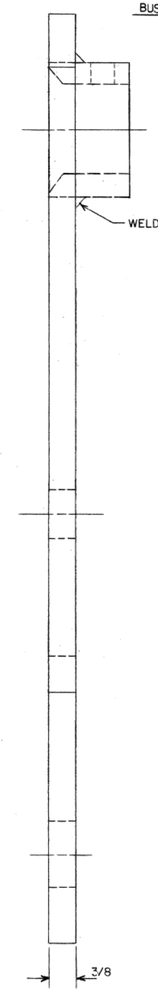

NOTES

1. 3/8" STD. THICK-HOT ROLLED PLATE, STEEL
   ALL OTHER DIMENSIONS ± 1/16"
2. BUSHING WELDED IN TRUNNION PLATE
3. POSITION BUSHING WITH CHAMFER DOWN
4. WELD BUSHING IN OPPOSITE SIDE OF PLATE FOR STREET SIDE TRUNNION PLATE.
5. TRUNNION PLATES TO BE BOLTED TO SEMI-CIRCLE W/ 7/8"- 9UNC BOLTS, NUTS, & LOCKWASHERS.
6. TRUNNION PLATES TO BE HELD TOGETHER W/ PIPE SPACER & 5/8"-11NC BOLT, NUT & LOCKWASHER.
7. BUSHING MAT'L: COLD FINISHED STEEL.

THIS DRAWING IS BASED UPON NEW JERSEY DEPARTMENT OF TRANSPORTATION - DIVISION OF CONSTRUCTION AND MAINTENANCE - BUREAU OF EQUIPMENT - DRAWING NO. 4-143 - DATED FEBRUARY 27, 1974; LAST REVISED JUNE. 21, 1976 (REV. #2)

NEW JERSEY TURNPIKE AUTHORITY
MAINTENANCE DEPARTMENT
STANDARD SNOW PLOW DETAILS

TRUNNION PLATE

OFFICE OF THE DIRECTOR OF MAINTENANCE
WOODBRIDGE, NEW JERSEY

DRAWING
SPP-4-143

PROCUREMENT NO.:

PRICE LINES:

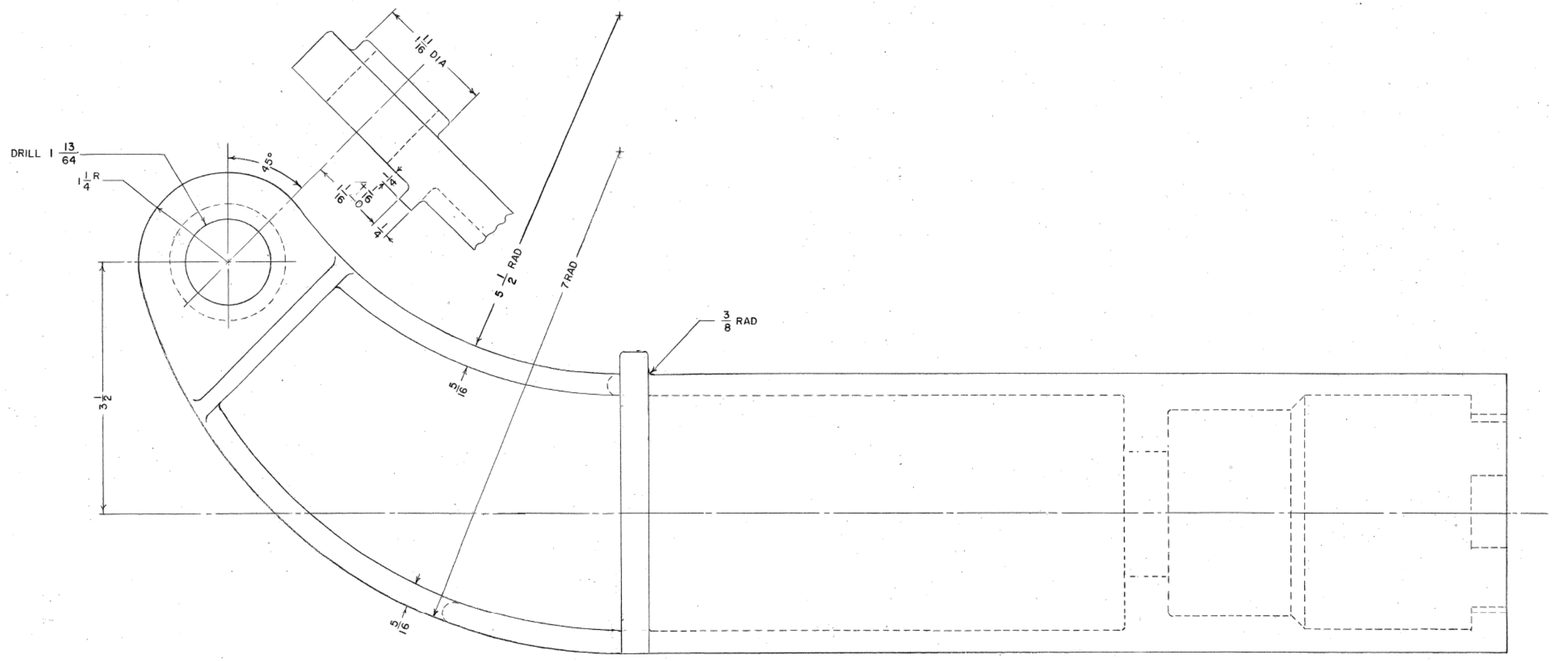

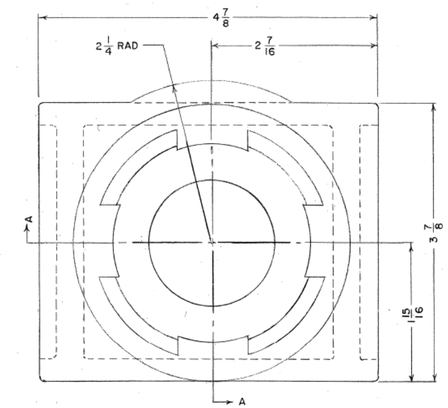

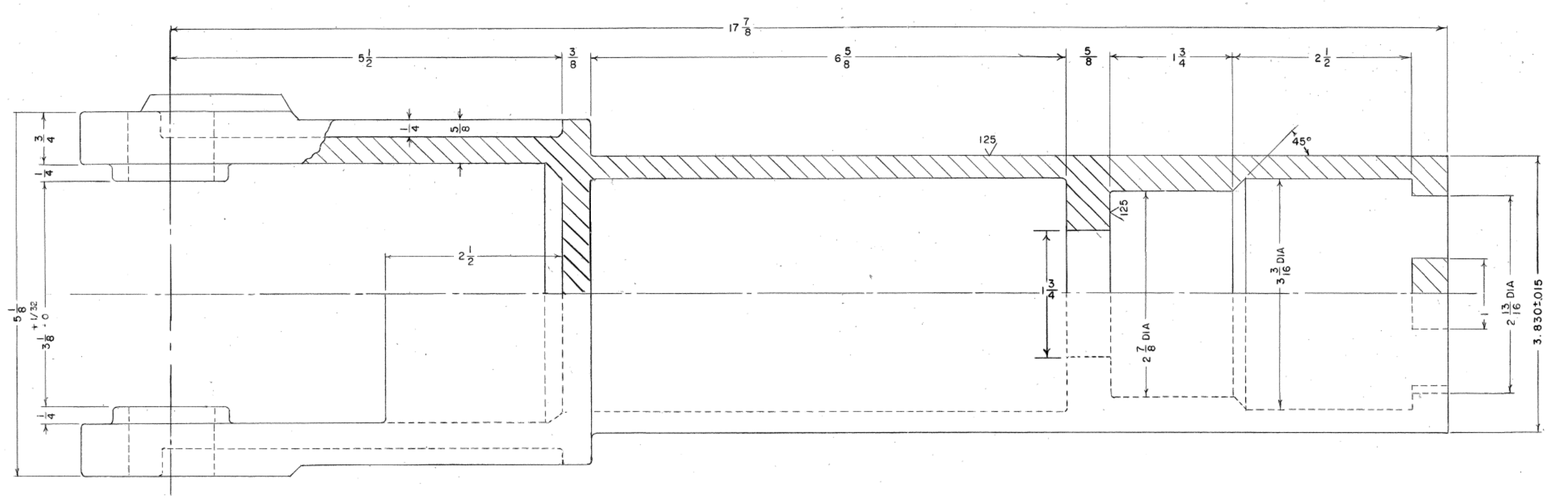

SECTION AA

NOTE
1. ALL FILLETS & ROUNDS 1/4 UNLESS OTHERWISE SPECIFIED.

VENDOR REF. GOOD ROADS NO. 62100636
MATERIAL CAST STEEL

THIS DRAWING IS BASED UPON NEW JERSEY DEPARTMENT OF TRANSPORTATION - DIVISION OF CONSTRUCTION AND MAINTENANCE - BUREAU OF EQUIPMENT - DRAWING NO. 4-144 - DATED MARCH 5, 1974; LAST REVISED MAY 1, 1995 (REV. #5)

NEW JERSEY TURNPIKE AUTHORITY
MAINTENANCE DEPARTMENT
STANDARD SNOW PLOW DETAILS

CASTER ASSEMBLY

OFFICE OF THE DIRECTOR OF MAINTENANCE
WOODBRIDGE, NEW JERSEY

DRAWING
SPP-4-144

PROCUREMENT NO.:

PRICE LINES:

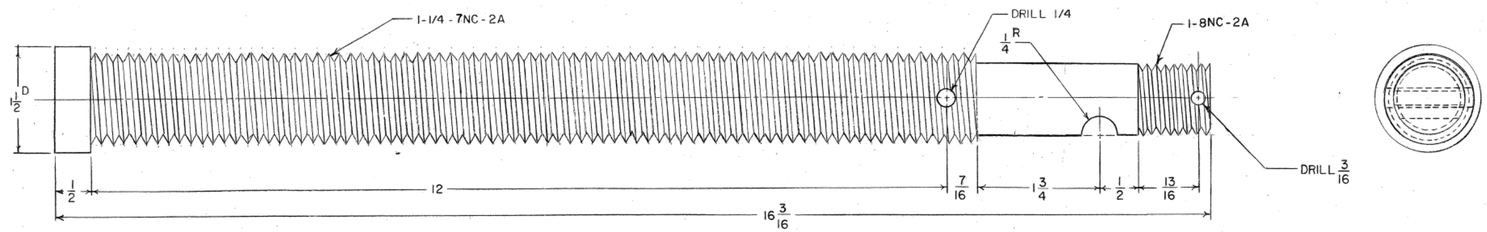

ADJUSTING BOLT
NO. 62100642

MAT'L : COLD FINISHED,
MEDIUM CARBON STEEL
HEAT TREATED

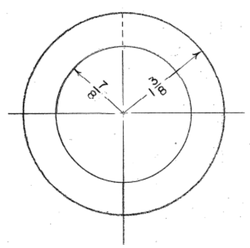

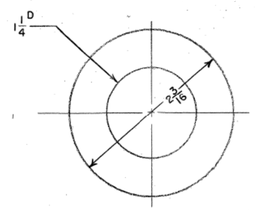

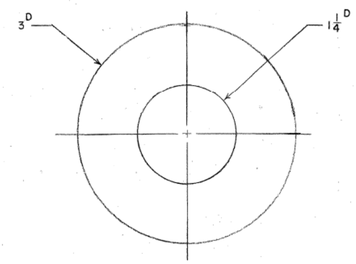

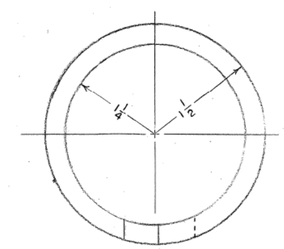

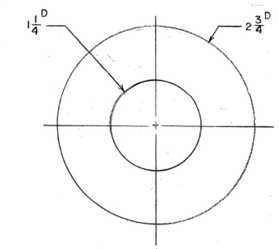

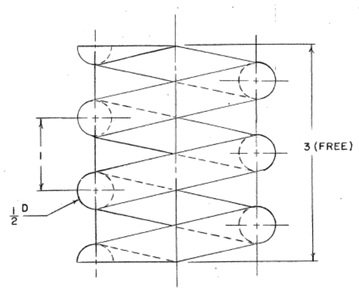

SPRING
NO. 62100637

MAT'L : SPRING STEEL

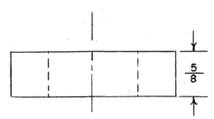

THRUST BEARING
NO. 62100637

TIMKEN NO. T-126, OR
APPROVED EQUAL

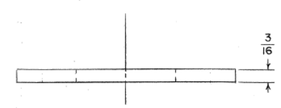

BEARING WASHER

STD. STEEL WASHER

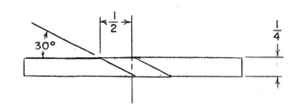

RETAINING RING
NO. 62100638

MAT'L: SPRING STEEL

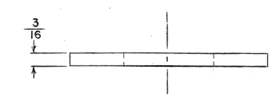

WASHER

STD. STEEL WASHER

NEW JERSEY TURNPIKE AUTHORITY
MAINTENANCE DEPARTMENT
STANDARD SNOW PLOW DETAILS

CASTER ASSEMBLY

VENDOR REF. GOOD ROADS

THIS DRAWING IS BASED UPON NEW JERSEY DEPARTMENT OF TRANSPORTATION - DIVISION OF CONSTRUCTION AND MAINTENANCE - BUREAU OF EQUIPMENT - DRAWING NO. 4-144-2 - DATED FEBRUARY 27, 1974; LAST REVISED SEPT. 8, 1975 (REV. #2)

OFFICE OF THE DIRECTOR OF MAINTENANCE
WOODBRIDGE, NEW JERSEY

DRAWING
SPP-4-144-2

PROCUREMENT NO.:

PRICE LINES:

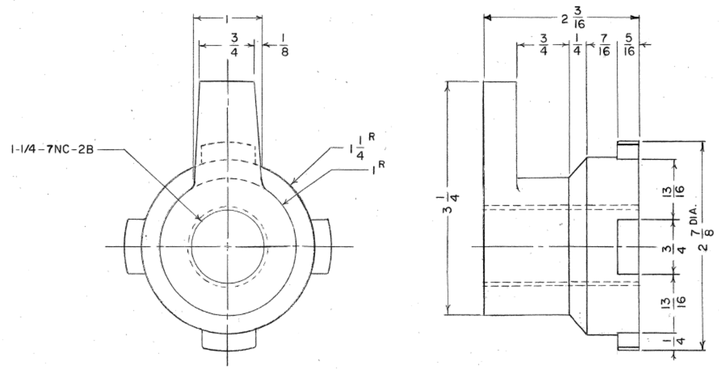

CASTER NUT

MAT'L: CASTS STEEL

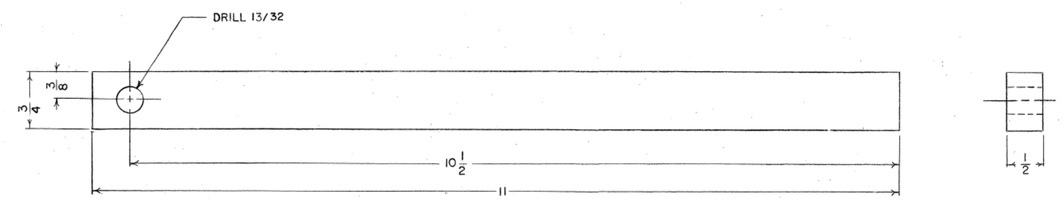

HANDLE

MAT'L: HOT ROLLED STEEL

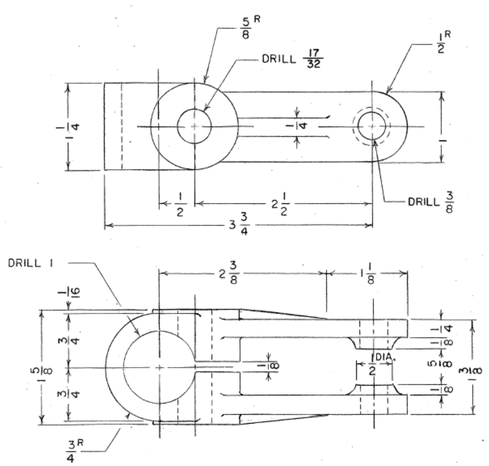

ADJUSTING BOLT FORK

MAT'L: CAST STEEL

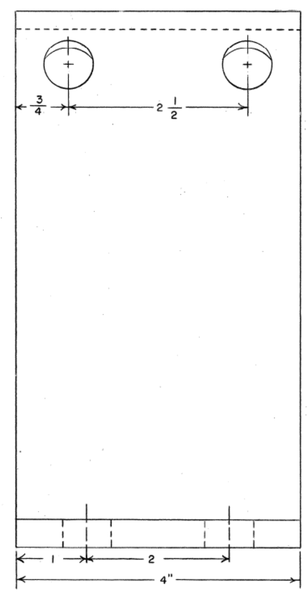

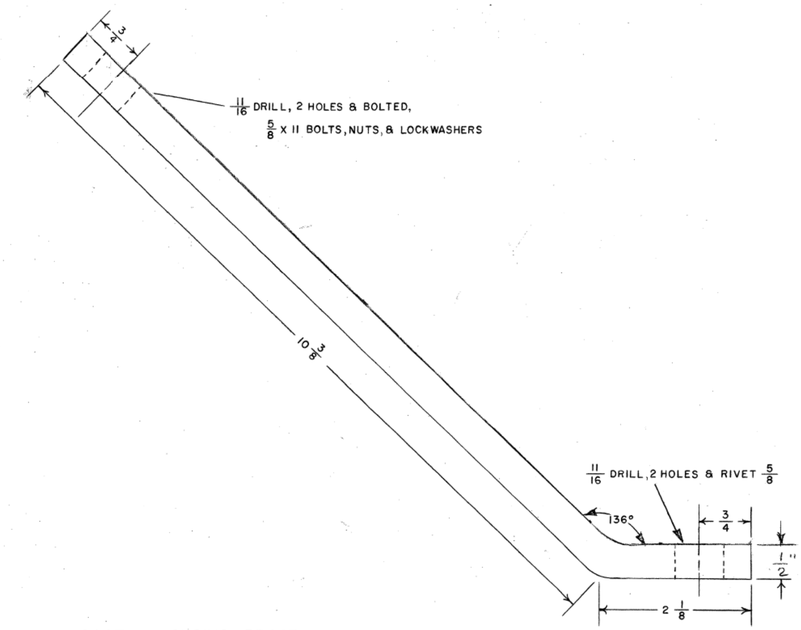

CASTER HOUSING BRACE

MAT'L: STRUCTURAL STEEL

NOTE

HOLE LOCATION TO BE VARIFIED WITH POSITION OF CASTER HOUSING ON SEMICIRCLE & HOLES ON FRONT ANGLE OF SEMICIRCLE

NOTES

1. ALL FILLETS 1/8

VENDOR REF. GOOD ROADS

1. CASTER NUT NO. 62100477
2. HANDLE NO. 62100151
3. ADJUSTING BOLT FORK NO. 62100640
4. CASTER HOUSING BRACE NO. 62100657

NEW JERSEY TURNPIKE AUTHORITY
MAINTENANCE DEPARTMENT
STANDARD SNOW PLOW DETAILS

CASTER ASSEMBLY

THIS DRAWING IS BASED UPON NEW JERSEY DEPARTMENT OF TRANSPORTATION - DIVISION OF CONSTRUCTION AND MAINTENANCE - BUREAU OF EQUIPMENT - DRAWING NO. 4-144-3 - DATED MARCH 1, 1974; LAST REVISED SEPT. 1, 1995 (REV. #4)

OFFICE OF THE DIRECTOR OF MAINTENANCE
WOODBRIDGE, NEW JERSEY

DRAWING

SPP-4-144-3

PROCUREMENT NO.:

PRICE LINES:

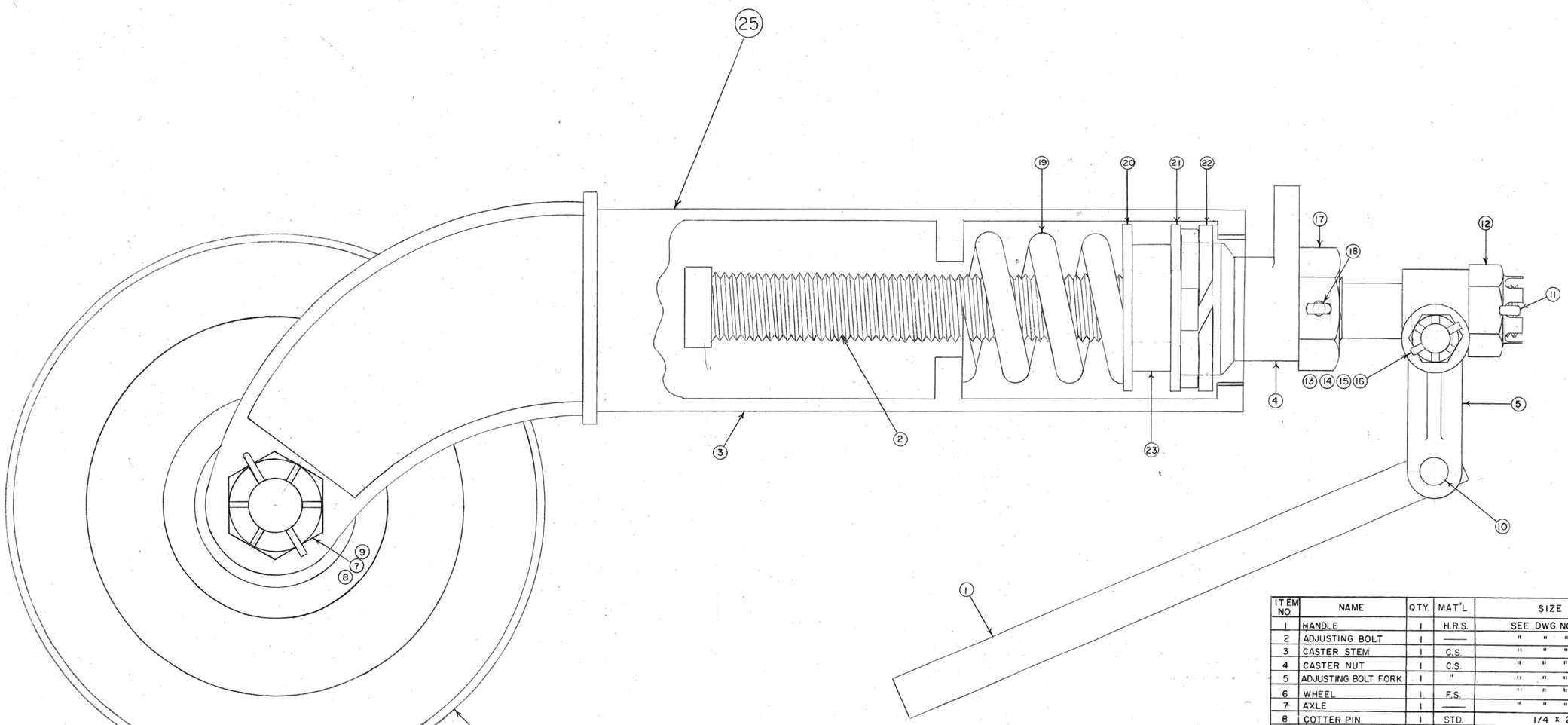

ITEM NO.	NAME	QTY.	MAT'L	SIZE
23	BEARING (THRUST)	1	——	SEE DWG.NO. 4-144-2
24				
25	COMPLETE CASTER ASSEMBLY - 2 REQ'D FOR EA. SNOW PLOW ASSY.			

ITEM NO.	NAME	QTY.	MAT'L	SIZE
1	HANDLE	1	H.R.S.	SEE DWG.NO. 4-144-3
2	ADJUSTING BOLT	1	——	" " " 4-144-2
3	CASTER STEM	1	C.S.	" " " 4-144-1
4	CASTER NUT	1	C.S.	" " " 4-144-3
5	ADJUSTING BOLT FORK	1	"	" " " 4-144-3
6	WHEEL	1	F.S.	" " " 4-155
7	AXLE	1	——	" " " 4-121
8	COTTER PIN	1	STD.	1/4 x 2
9	SLOTTED NUT	1	STD.	1-1/8" X 12 UNF
10	RIVET PIN	1	STD.	3/8
11	COTTER PIN	1	STD.	3/16 x 2
12	SLOTTED NUT-HEX	1	STD.	1"-8NC
13	BOLT - HEX HD.	1	STD.	1/2"X 20UNF
14	WASHER	1	STD.	1/2
15	SLOTTED NUT-HEX	1	STD.	1/2"X 20 UNF
16	COTTER PIN	1	STD.	1/8"X1-1/4"
17	HEX NUT	1	STD	1-1/4" X 7 NC
18	COTTER PIN	1	STD.	1/4"
19	SPRING	1	SPG. STL.	SEE DWG. NO. 4-144-2
20	BEARING WASHER	1	STD.	" " " 4-144-2
21	WASHER	1	STD.	" " " 4-144-2
22	RETAINING RING	1	SPG. STL.	" " " 4-144-2

NEW JERSEY TURNPIKE AUTHORITY
MAINTENANCE DEPARTMENT
STANDARD SNOW PLOW DETAILS

CASTER ASSEMBLY

VENDOR REF. GOOD ROADS NO. 62100635

THIS DRAWING IS BASED UPON NEW JERSEY DEPARTMENT OF TRANSPORTATION - DIVISION OF CONSTRUCTION AND MAINTENANCE - BUREAU OF EQUIPMENT - DRAWING NO. 4-144-4 - DATED FEBRUARY 28, 1974; LAST REVISED SEPT. 5, 1975 (REV. #3)

OFFICE OF THE DIRECTOR OF MAINTENANCE
WOODBRIDGE, NEW JERSEY

DRAWING
SPP-4-144-4

PROCUREMENT NO.:

PRICE LINES:

NOTE: 6 STUDS EQ. SP. 5/8"-11 UNC.
MAT'L: COLD FINISHED, MEDIUM CARBON STEEL, HEAT TREATED GRADE 8

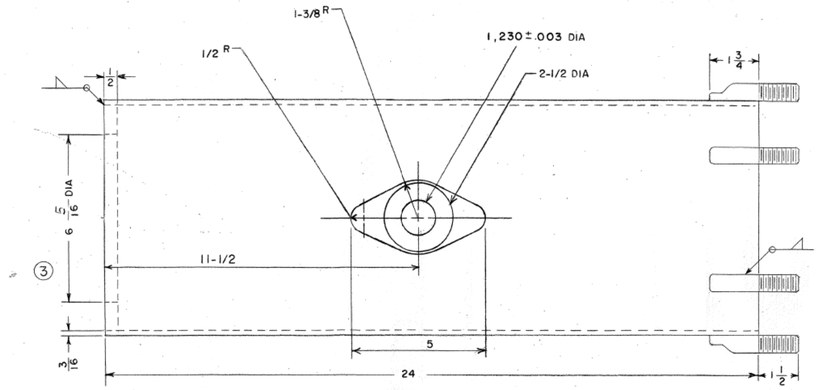

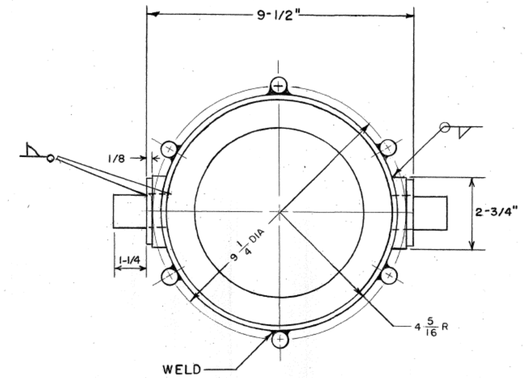

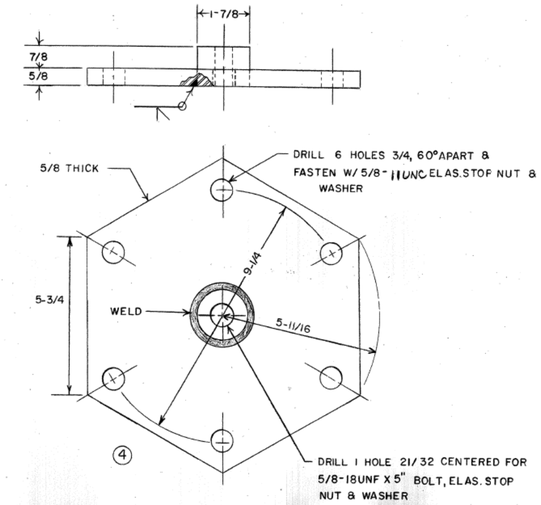

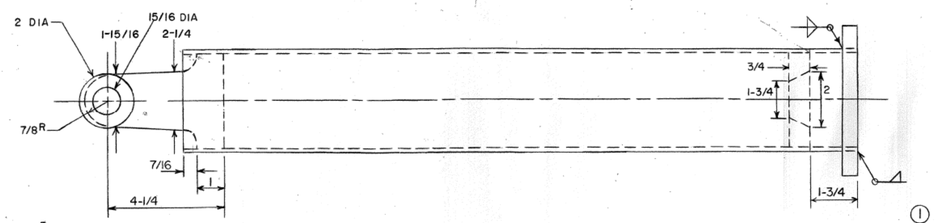

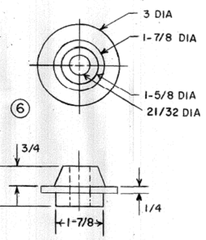

MAT'L: CAST STEEL

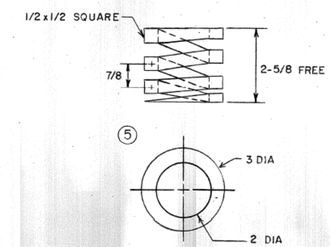

MAT'L: SPRING STEEL

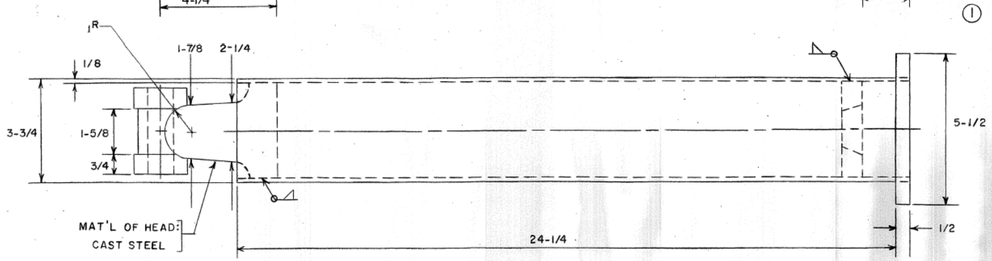

UNLESS OTHERWISE SPECIFIED ELSEWHERE ON THIS DRAWING, THE FOLLOWING MAT'L. TO BE USED

TUBING	COLD DRAWN SEAMLESS CARBON STEEL
PLATE	HOT ROLLED STRUCTURAL STEEL QUALITY
ROUND STOCK	COLD FINISHED MEDIUM CARBON STEEL

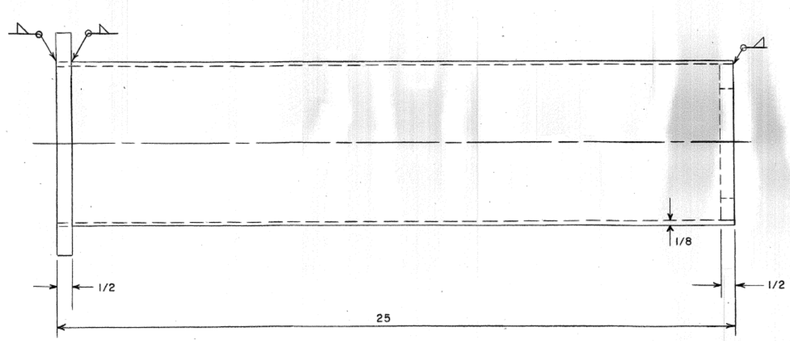

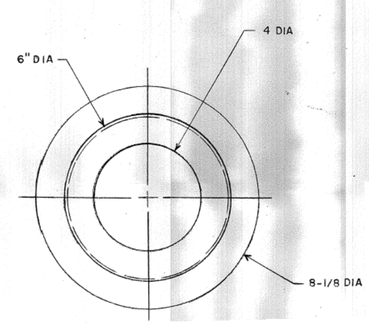

ITEM NO.	NAME
①	CENTER TUBE ASSEMBLY
②	TUBING ASSEMBLY
③	OUTSIDE TUBE ASSEMBLY
④	COVER PLATE ASSEMBLY
⑤	RECOIL SPRING
⑥	SPRING BOSS

NEW JERSEY TURNPIKE AUTHORITY
MAINTENANCE DEPARTMENT
STANDARD SNOW PLOW DETAILS

TIP SPRING ASSEMBLY

THIS DRAWING IS BASED UPON NEW JERSEY DEPARTMENT OF TRANSPORTATION - DIVISION OF CONSTRUCTION AND MAINTENANCE - BUREAU OF EQUIPMENT - DRAWING NO. 4-145-1 - DATED MARCH 5, 1974; LAST REVISED NOV. 19, 1997 (REV. #10)

OFFICE OF THE DIRECTOR OF MAINTENANCE
WOODBRIDGE, NEW JERSEY

DRAWING
SPP-4-145-1

PROCUREMENT NO.:

PRICE LINES:

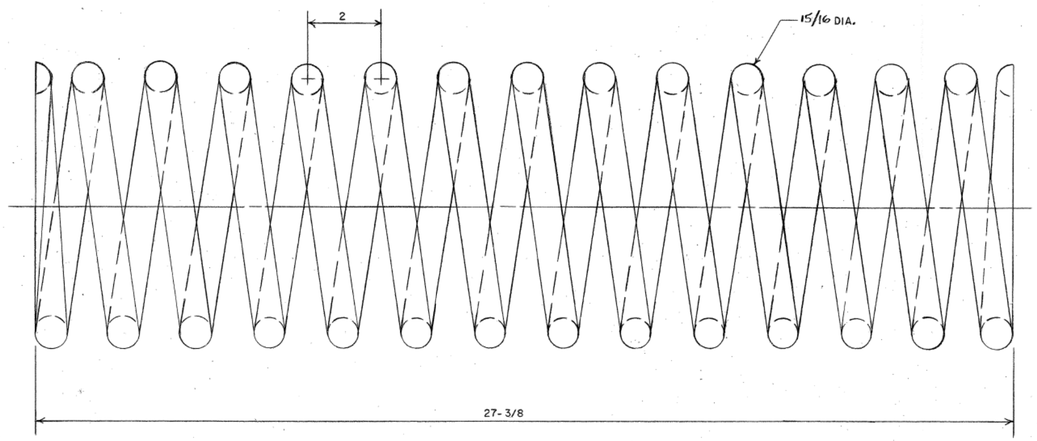

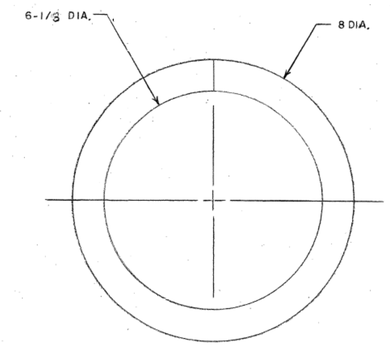

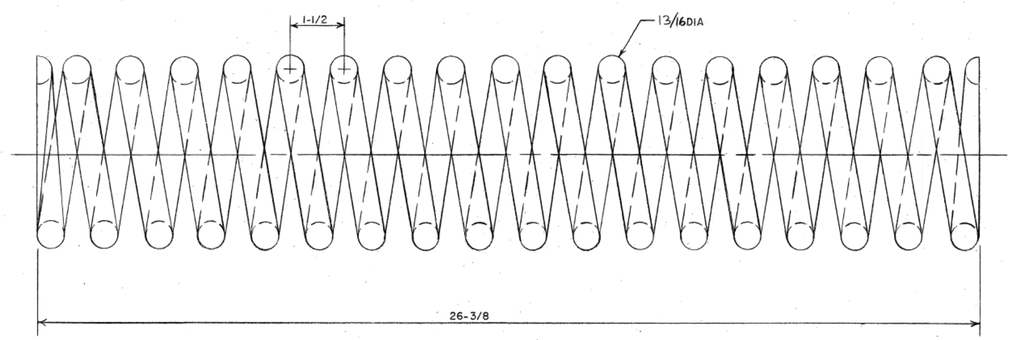

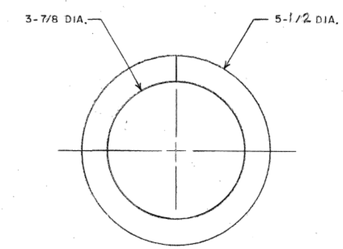

NOTES:
1. ENDS OF SPRINGS TO BE TAPERED, GROUND AND SQUARED

MAT'L
ALLOY SPRING STEEL-5160H-HOT WOUND
TO BE MANUFACTURED TO ASTM SPEC
A-125 LR MAT'L EQUAL OR GREATER
THAN ASTM-A689, A-29 AND A-304

NEW JERSEY TURNPIKE AUTHORITY
MAINTENANCE DEPARTMENT
STANDARD SNOW PLOW DETAILS

CASTER ASSEMBLY

THIS DRAWING IS BASED UPON NEW JERSEY DEPARTMENT OF TRANSPORTATION - DIVISION OF CONSTRUCTION AND MAINTENANCE - BUREAU OF EQUIPMENT - DRAWING NO. 4-145-2 - DATED MARCH 8, 1974; LAST REVISED NOV. 97 1997 (REV. #1)

OFFICE OF THE DIRECTOR OF MAINTENANCE
WOODBRIDGE, NEW JERSEY

DRAWING
SPP-4-145-2

PROCUREMENT NO.:

PRICE LINES:

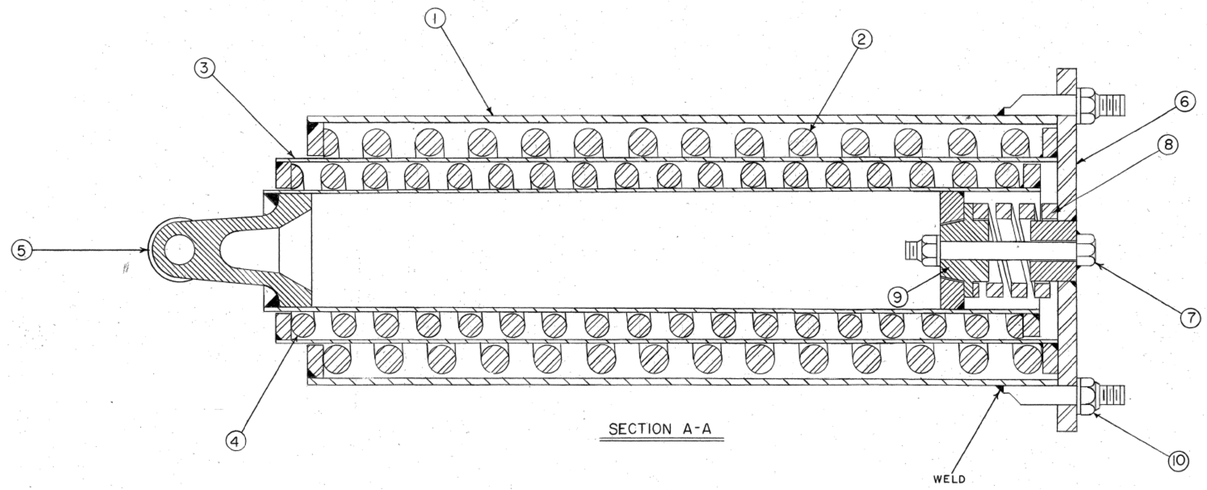

SECTION A-A

ITEM	NAME	QTY	DWG. NO.
1	OUTSIDE TUBE ASSEMBLY	1	4-145-1, ITEM 3
2	OUTSIDE SPRING	1	4-145-2 ———
3	TUBING ASSEMBLY	1	4-145-1, ITEM 2
4	INSIDE SPRING	1	4-145-2 ———
5	CENTER TUBE ASSEMBLY	1	4-145-1, ITEM 1
6	COVER PLATE ASSEMBLY	1	4-145-1, ITEM 4
7	5/8" X 18UNF X 5" BOLT	1	———
8	RECOIL SPRING	1	4-145-1, ITEM 5
9	SPRING BOSS	1	4-145-1, ITEM 6
10	5/8" X 18UNF ELAS. STOP NUT & WASHER	7 EA.	———

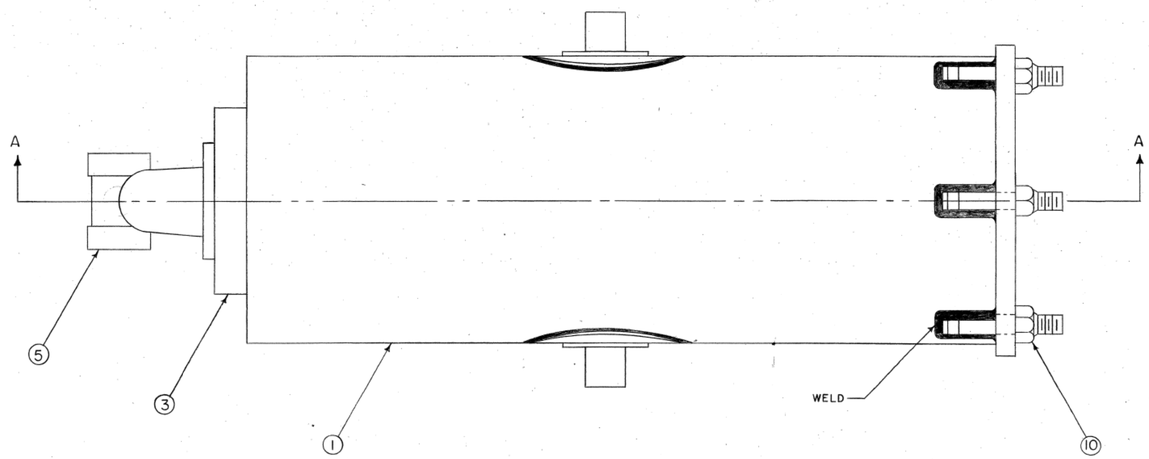

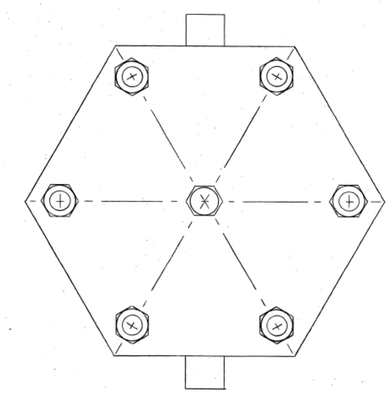

NOTES

1. SECTION LINING DOES NOT REPRESENT TYPE OF MATERIAL, ONLY CLARIFICATION BETWEEN PARTS.
2. MATERIAL SPECIFIED ON DWG. NO. 4-145-1 & 4-145-2.
3. DO NOT SCALE.

NEW JERSEY TURNPIKE AUTHORITY
MAINTENANCE DEPARTMENT
STANDARD SNOW PLOW DETAILS

TRIP SPRING ASSEMBLY

THIS DRAWING IS BASED UPON NEW JERSEY DEPARTMENT OF TRANSPORTATION - DIVISION OF CONSTRUCTION AND MAINTENANCE - BUREAU OF EQUIPMENT - DRAWING NO. 4-145-3 - DATED NOVEMBER 11, 1974; LAST REVISED NOV. 11, 1974

OFFICE OF THE DIRECTOR OF MAINTENANCE
WOODBRIDGE, NEW JERSEY

DRAWING
SPP-4-145-3

PROCUREMENT NO.:

PRICE LINES:

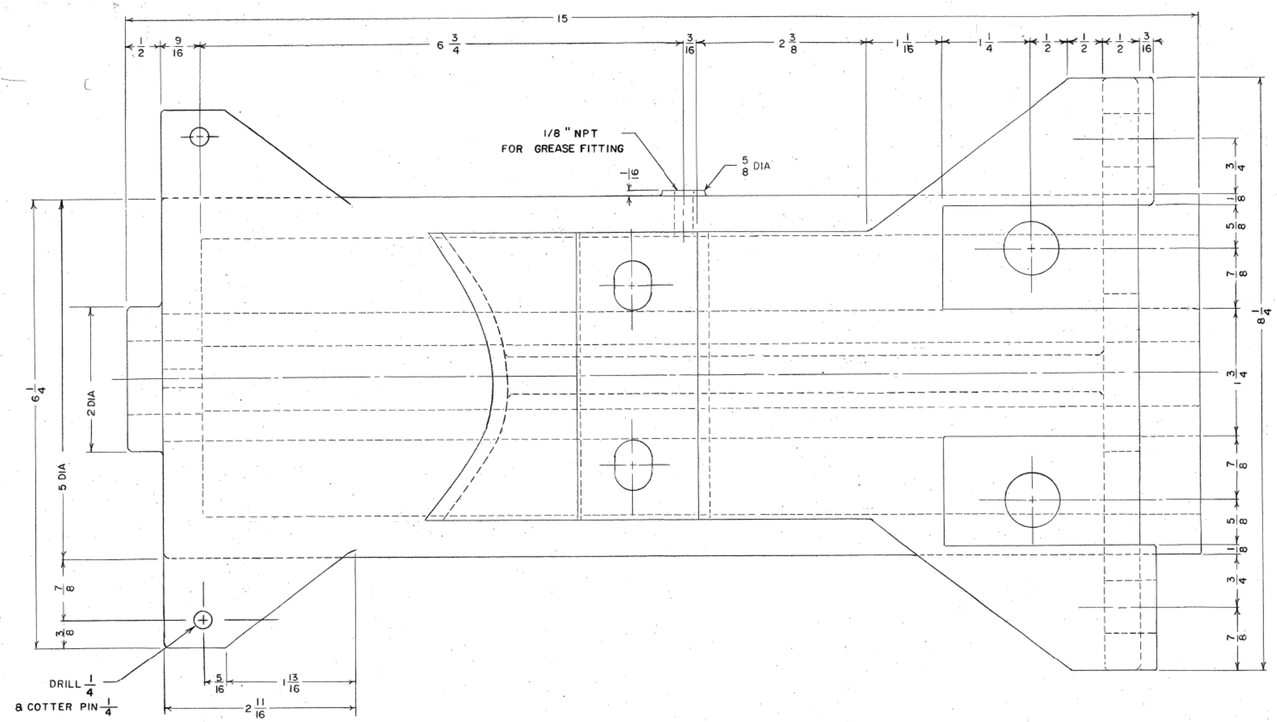

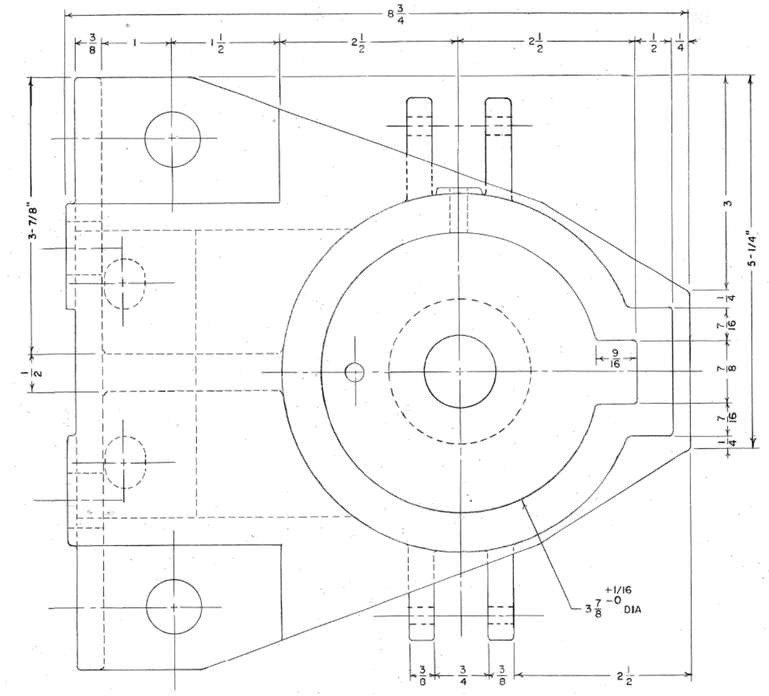

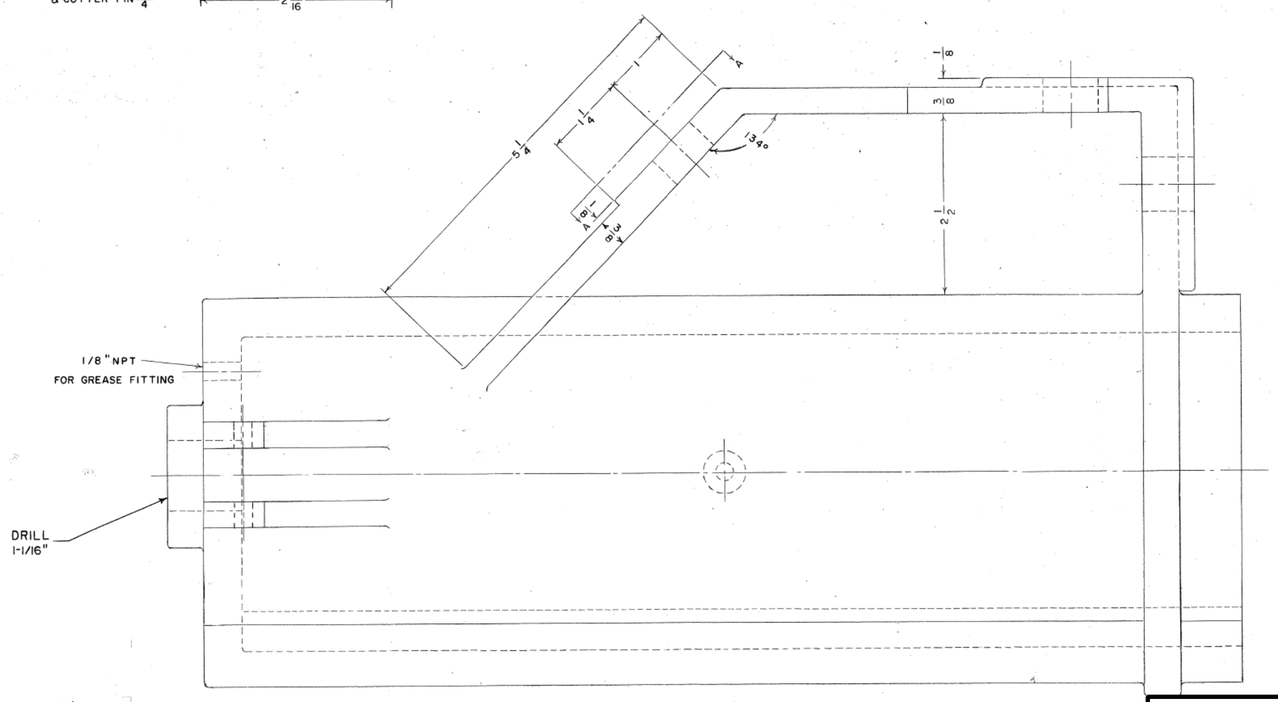

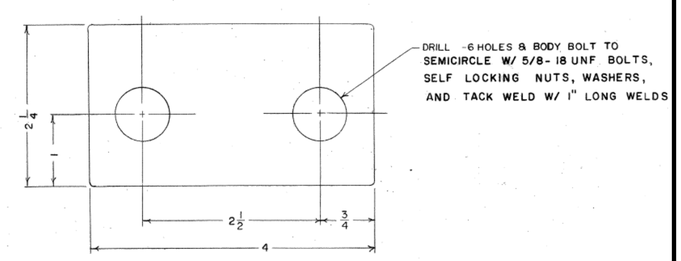

VIEW A-A

VENDOR REF.
GOOD ROADS NO. 62101805
MATERIAL CAST STEEL

NOTES
1. ALL FILLETS & ROUNDS 1/8
2. TOLERANCE ± 1/32 UNLESS OTHERWISE SPECIFIED

THIS DRAWING IS BASED UPON NEW JERSEY DEPARTMENT OF TRANSPORTATION - DIVISION OF CONSTRUCTION AND MAINTENANCE - BUREAU OF EQUIPMENT - DRAWING NO. 4-146 - DATED MARCH 11, 1974; LAST REVISED MARCH 3, 1984 (REV. #3)

NEW JERSEY TURNPIKE AUTHORITY
MAINTENANCE DEPARTMENT
STANDARD SNOW PLOW DETAILS

CASTER HOUSING

OFFICE OF THE DIRECTOR OF MAINTENANCE
WOODBRIDGE, NEW JERSEY

DRAWING
SPP-4-146

PROCUREMENT NO.:

PRICE LINES:

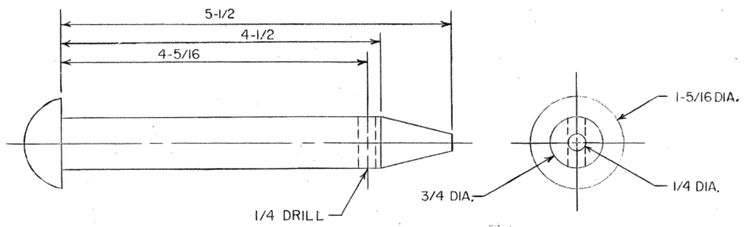

HINGE PIN & LIFT ARM CHAIN RIVET PIN
BT. HEAD RIVET 3/4 DIA.x 5-1/2 LG
MAT'L: HRS
62100240

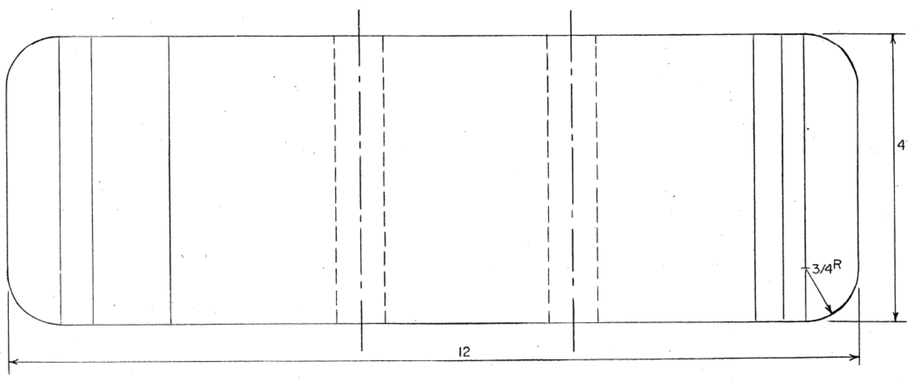

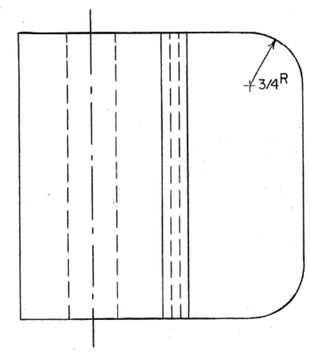

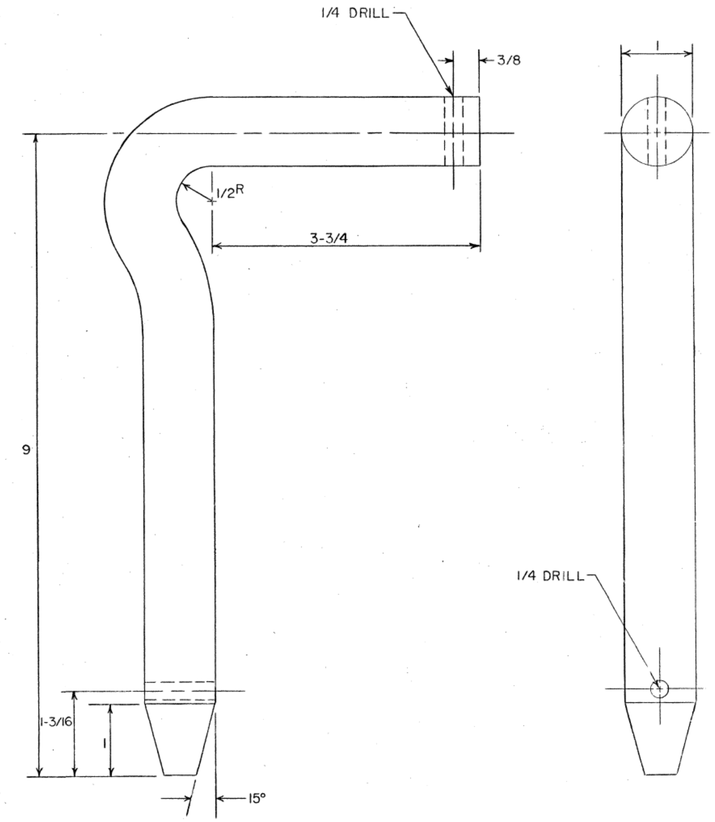

LOCKING PIN 62100501 MATL: MILD STEEL
1" DIA.x 13" LG

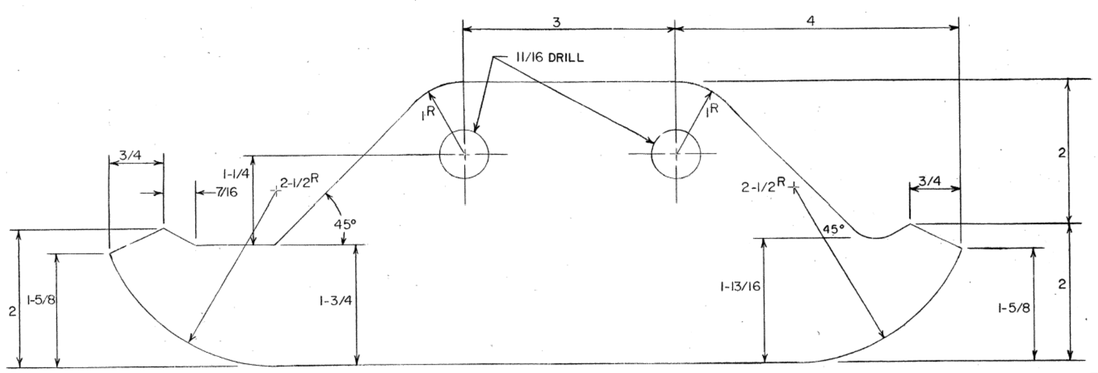

SHOE 62100794 MATL: CAST IRON

VENDOR REFERENCE GOOD ROADS

NOTES

1 DRILLED HOLES (11/16) IN SHOE MUST BE DRILLED STRAIGHT AND PARALLEL.
2 SHOE TO BE CONNECTED TO MOLDBOARD ANGLE BY 2-5/8" x 6" LG BOLTS W/LOCKWASHERS & NUTS.
3 1/4" COTTER PIN TO BE PLACED THRU HINGE PIN AND L.A.C. RIVET PIN AFTER INSTALLATION
4 SHOE USED ONLY ON MODEL (S) O-R 12.75-(32,53)-(14.75,22.75)-1 & O-R.11.25-(24,42)-(13,18)-1 MOD.
5 1/4" COTTER PIN TO BE INSERTED THRU LOWER 1/4" HOLE OF LOCKING PIN AFTER INSTALLATION

NEW JERSEY TURNPIKE AUTHORITY
MAINTENANCE DEPARTMENT
STANDARD SNOW PLOW DETAILS

SHOE, LOCKING PIN, AND RIVET PIN

THIS DRAWING IS BASED UPON NEW JERSEY DEPARTMENT OF TRANSPORTATION - DIVISION OF CONSTRUCTION AND MAINTENANCE - BUREAU OF EQUIPMENT - DRAWING NO. 4-147 - DATED MARCH 21, 1974; LAST REVISED JUNE 26, 1975 (REV. #1)

OFFICE OF THE DIRECTOR OF MAINTENANCE
WOODBRIDGE, NEW JERSEY

DRAWING
SPP-4-147

PROCUREMENT NO.:

PRICE LINES:

NOTE:
1. DWG. NO. 4-149 SUPERCEDES DWG NO. 1087 (4-138)
2. ROD TO BE CHROME PLATED.

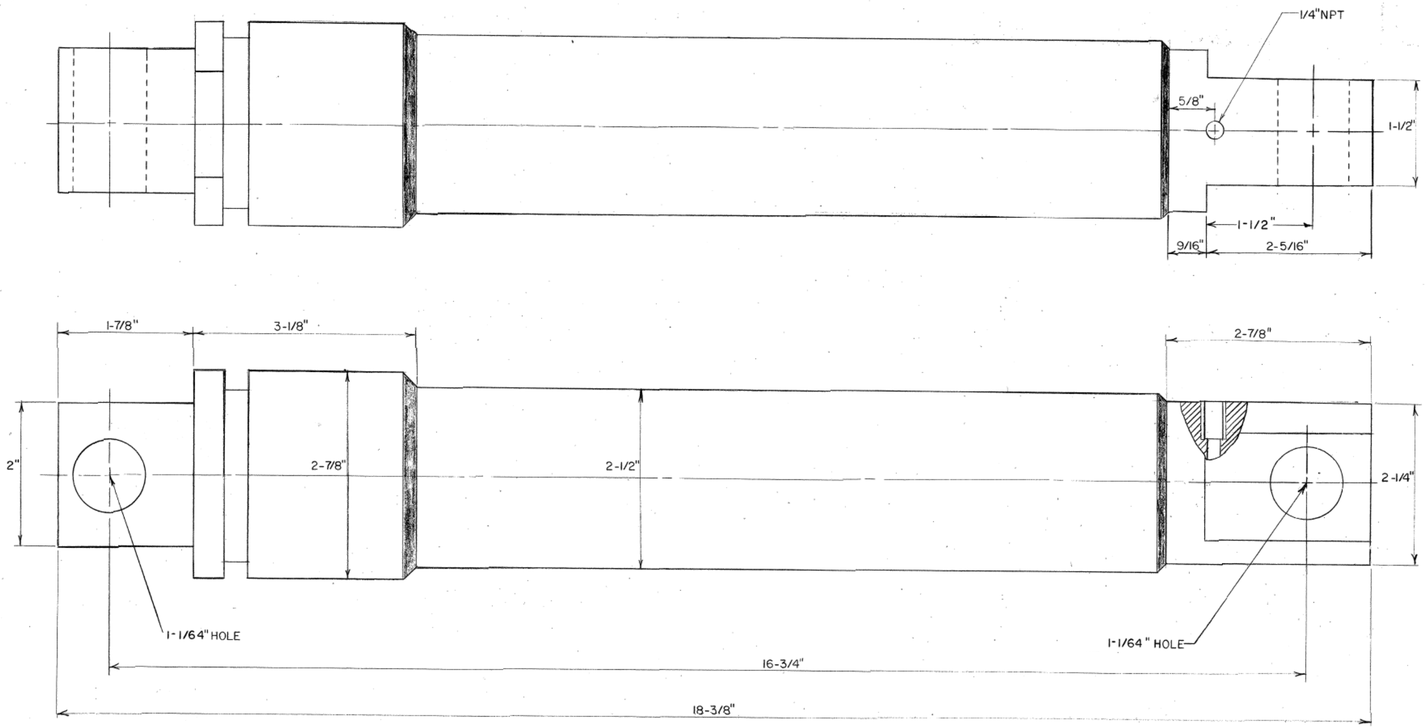

SINGLE-ACTING RAM-2" ROD & 10" STROKE

NEW JERSEY TURNPIKE AUTHORITY
MAINTENANCE DEPARTMENT
STANDARD SNOW PLOW DETAILS

SINGLE-ACTING RAM - 2" ROD & 10" STROKE

THIS DRAWING IS BASED UPON NEW JERSEY DEPARTMENT OF TRANSPORTATION - DIVISION OF CONSTRUCTION AND MAINTENANCE - BUREAU OF EQUIPMENT - DRAWING NO. 4-149 - DATED MARCH 27, 1974; LAST REVISED NOV 26, 1974 (REV. #2)

OFFICE OF THE DIRECTOR OF MAINTENANCE
WOODBRIDGE, NEW JERSEY

DRAWING
SPP-4-149

PROCUREMENT NO.:

PRICE LINES:

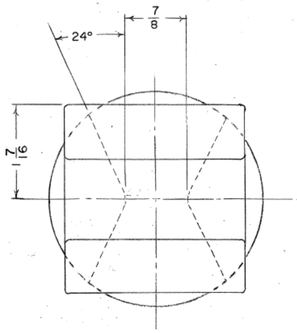

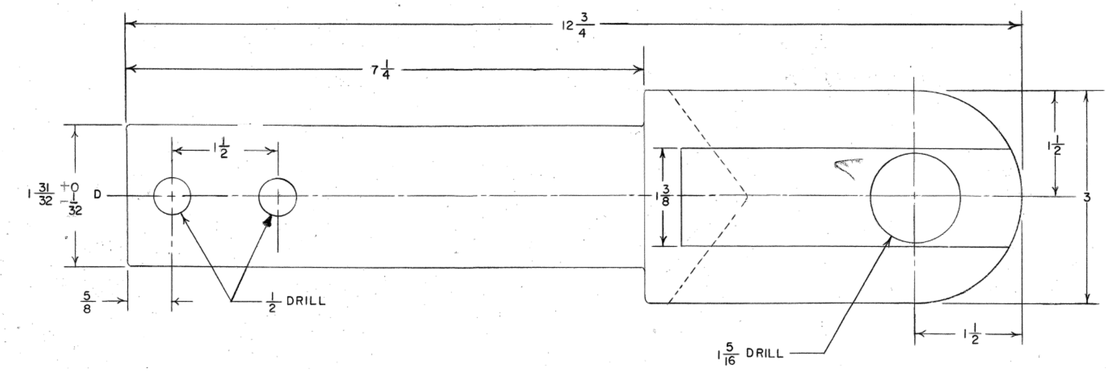

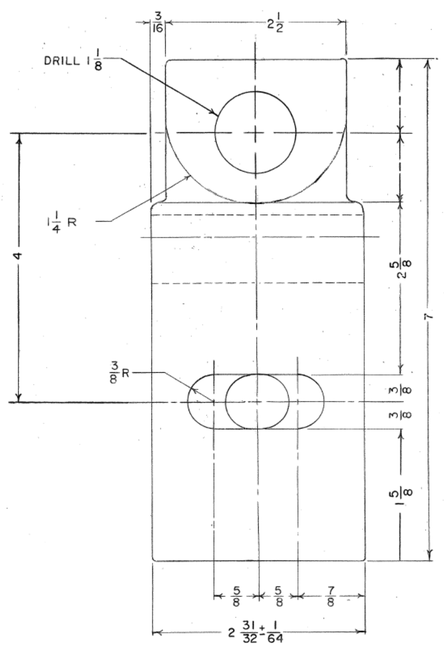

LATCH PIN SWIVEL

MAT'L: CAST STEEL

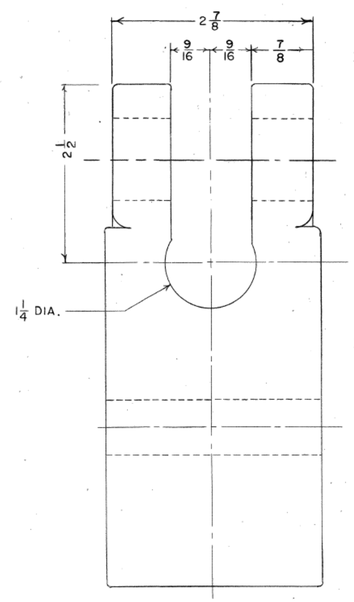

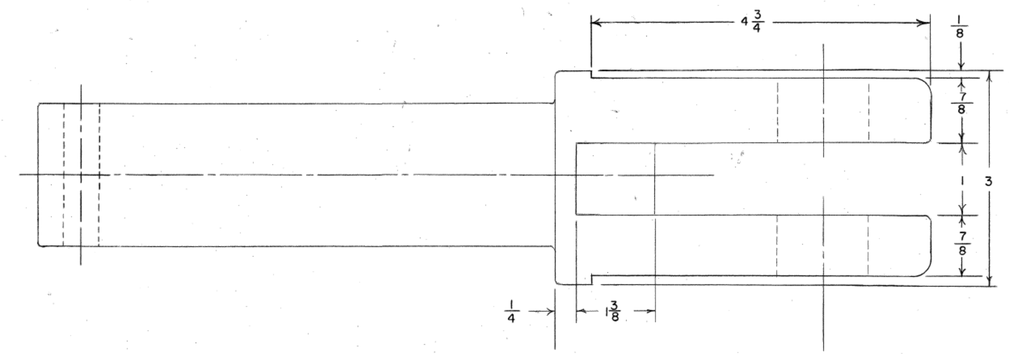

NOTES

1 EYE BAR HELD INTO POSITION IN PUSH BAR BY 1/2" COTTER PIN.
2 LATCH PIN SWIVEL TO BE HELD INTO POSITION IN PUSH BAR BY 5/8"-11 UNC BOLT, NUT, & LOCKWASHER.

EYE BAR

MAT'L - STEEL WELDMENT

NEW JERSEY TURNPIKE AUTHORITY
MAINTENANCE DEPARTMENT
STANDARD SNOW PLOW DETAILS

LATCH PIN SWIVEL
AND EYE BAR

THIS DRAWING IS BASED UPON NEW JERSEY DEPARTMENT OF TRANSPORTATION - DIVISION OF CONSTRUCTION AND MAINTENANCE - BUREAU OF EQUIPMENT - DRAWING NO. 4-154 - DATED APRIL 19, 1974; LAST REVISED MARCH 1, 2001 (REV. #10)

OFFICE OF THE DIRECTOR OF MAINTENANCE
WOODBRIDGE, NEW JERSEY

DRAWING
SPP-4-154

PROCUREMENT NO.:

PRICE LINES:

NOTES

1. MATERIAL TO BE CAST STEEL.
2. SEMICIRCLE HINGE TO BE MOUNTED TO SEMICIRLE WITH 5/8" RIVETS OR 5/8" FINE THREADED BOLTS, NUTS & LOCKWASHERS, WITH 1" LONG TACK WELDS
3. ROUNDS AND FILLETS TO BE 1/8".
4. FASTEN MOLDBOARD HINGE TO MOLDBOARD W/ 1-1/4" X 7 UNC X 6-1/2" BOLTS, NUTS, AND LOCKWASHERS, 2 OF EA. PER HINGE.

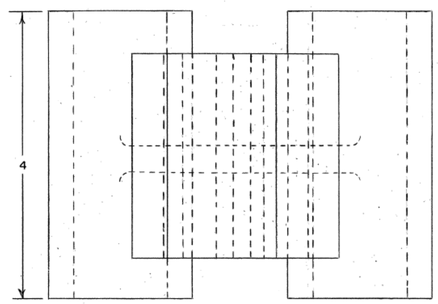

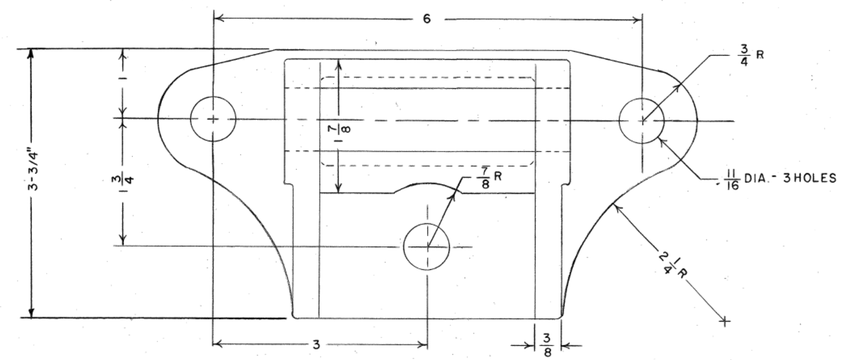

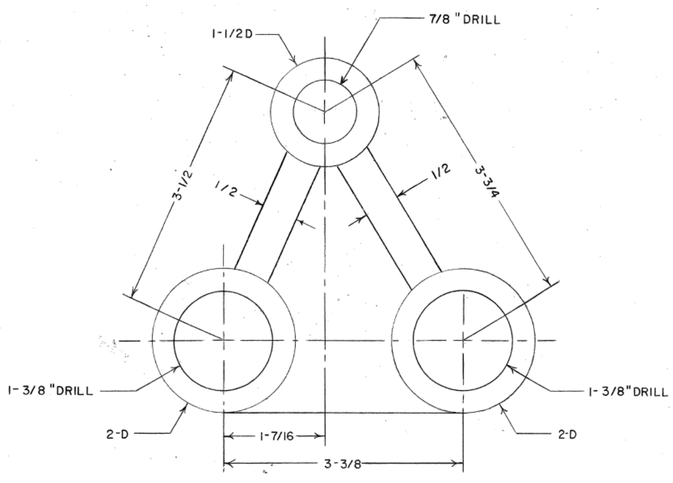

MOLDBOARD HINGE

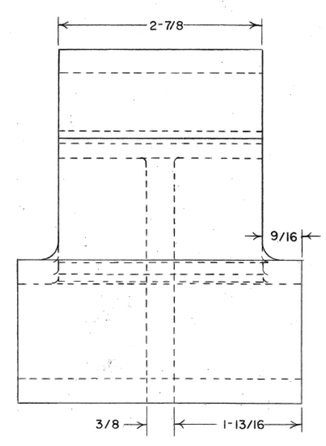

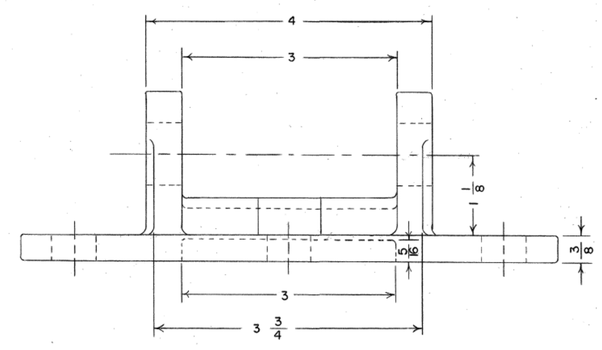

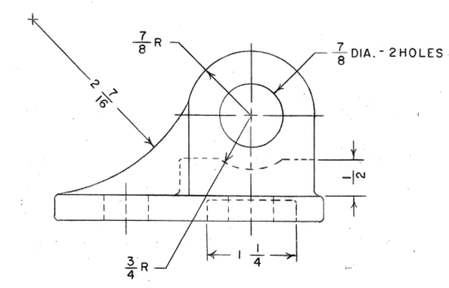

SEMICIRCLE HINGE

NEW JERSEY TURNPIKE AUTHORITY
MAINTENANCE DEPARTMENT
STANDARD SNOW PLOW DETAILS

MOLDBOARD AND SEMICIRCLE HINGES

THIS DRAWING IS BASED UPON NEW JERSEY DEPARTMENT OF TRANSPORTATION - DIVISION OF CONSTRUCTION AND MAINTENANCE - BUREAU OF EQUIPMENT - DRAWING NO. 4-156 - DATED JULY 18, 1974; LAST REVISED FEB., 1984 (REV. #4)

OFFICE OF THE DIRECTOR OF MAINTENANCE
WOODBRIDGE, NEW JERSEY

DRAWING
SPP-4-156

PROCUREMENT NO.:

PRICE LINES:

NOTES

1. UNLESS OTHERWISE SPECIFIED, FILLETS AND ROUNDS ARE TO HAVE 1/8" R.
2. ALL SHARP EDGES AND BURRS TO BE REMOVED.
3. FASTEN CURB BUMPERS TO MOLDBOARD W/ 5/8" X 11UNC BOLTS, NUTS, AND LOCKWASHERS.
4. FASTEN WRAP AROUND TO MOLDBOARD W/ 5/8" X 11UNC x 2-1/2" CARRIAGE BOLTS, NUTS, LOCKWASHERS.

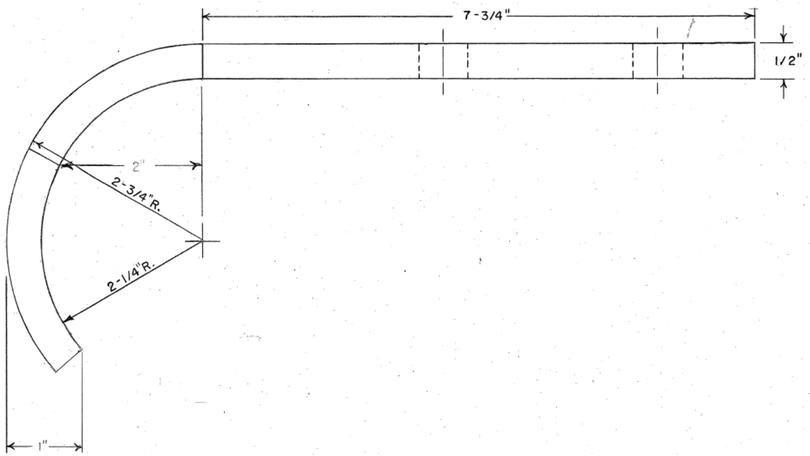

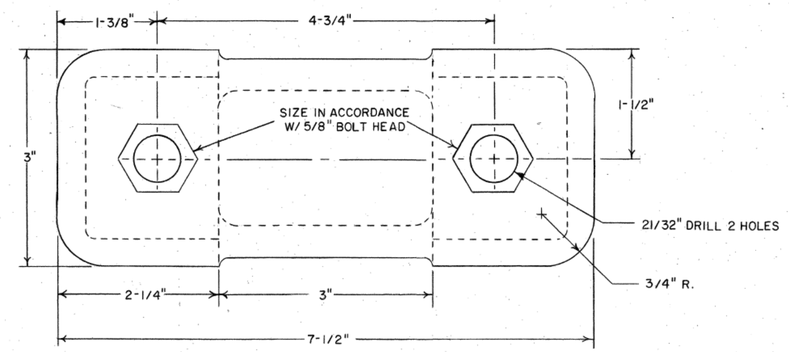

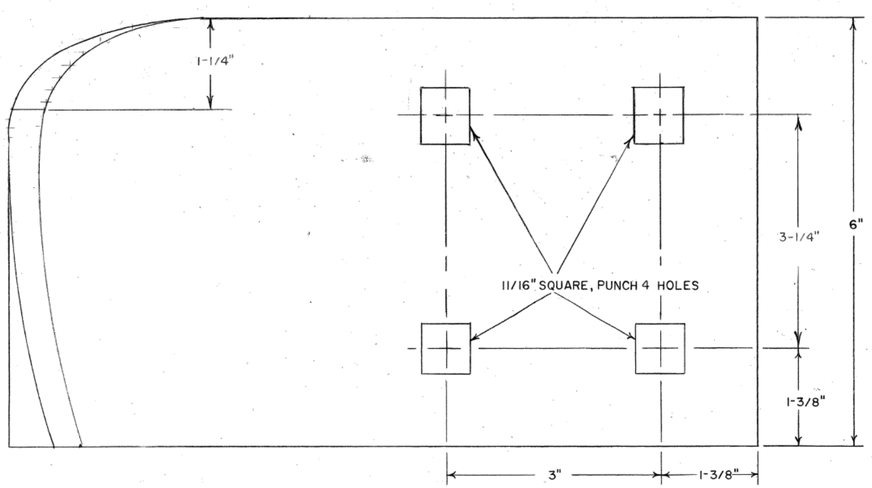

WRAP AROUND – RIGHT SIDE

MATL: HIGH CARBON STEEL

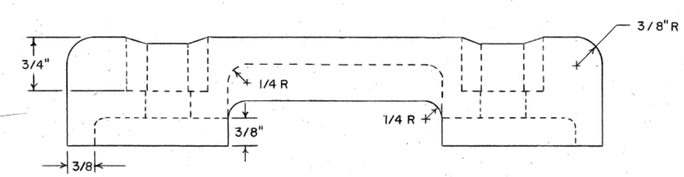

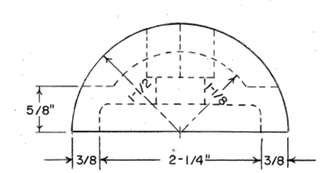

CURB BUMPER

MATL: STEEL WELDMENT

NEW JERSEY TURNPIKE AUTHORITY
MAINTENANCE DEPARTMENT
STANDARD SNOW PLOW DETAILS

WRAP AROUND-RIGHT SIDE
AND CURB BUMPER

THIS DRAWING IS BASED UPON NEW JERSEY DEPARTMENT OF TRANSPORTATION - DIVISION OF CONSTRUCTION AND MAINTENANCE - BUREAU OF EQUIPMENT - DRAWING NO. 4-158 - DATED NOVEMBER 13, 1974; LAST REVISED MARCH 23, 2001 (REV. #5)

OFFICE OF THE DIRECTOR OF MAINTENANCE
WOODBRIDGE, NEW JERSEY

DRAWING
SPP-4-158

PROCUREMENT NO.:

PRICE LINES:

NOTES

1. SHARP EDGES AND BURRS TO BE REMOVED.
2. FASTEN WRAP AROUND TO MOLDBOARD W/ 5/8" x 11UNC x 2-1/2" CARRIAGE BOLTS, NUTS, AND LOCKWASHERS.

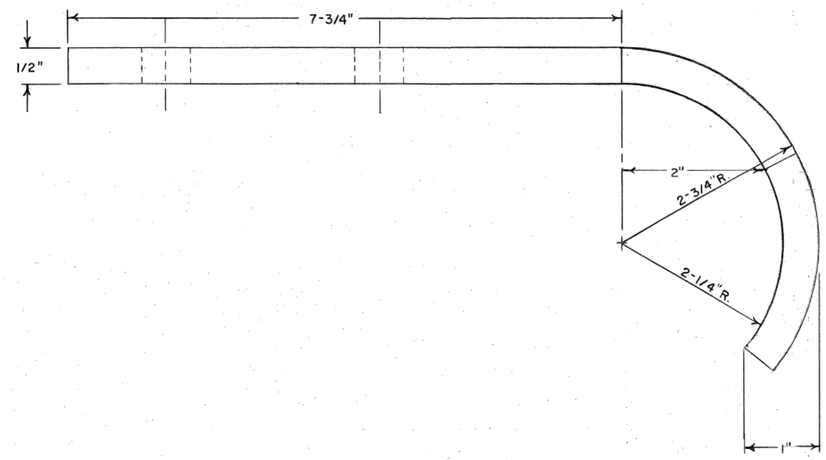

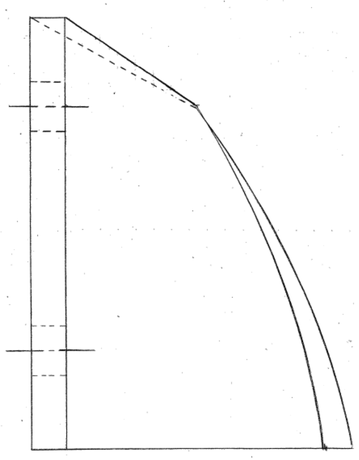

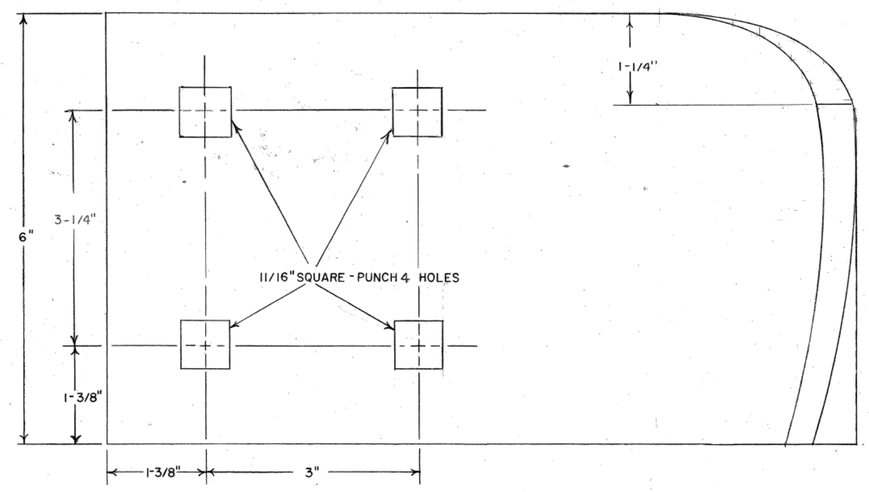

WRAP AROUND – LEFT SIDE

MATL: HIGH CARBON STEEL

NEW JERSEY TURNPIKE AUTHORITY
MAINTENANCE DEPARTMENT
STANDARD SNOW PLOW DETAILS

WRAP AROUND - LEFT SIDE

THIS DRAWING IS BASED UPON NEW JERSEY DEPARTMENT OF TRANSPORTATION - DIVISION OF CONSTRUCTION AND MAINTENANCE - BUREAU OF EQUIPMENT - DRAWING NO. 4-159 - DATED NOVEMBER 15, 1974; LAST REVISED SEPT. 11, 1990 (REV. #4)

OFFICE OF THE DIRECTOR OF MAINTENANCE
WOODBRIDGE, NEW JERSEY

DRAWING
SPP-4-159

PROCUREMENT NO.:

PRICE LINES:

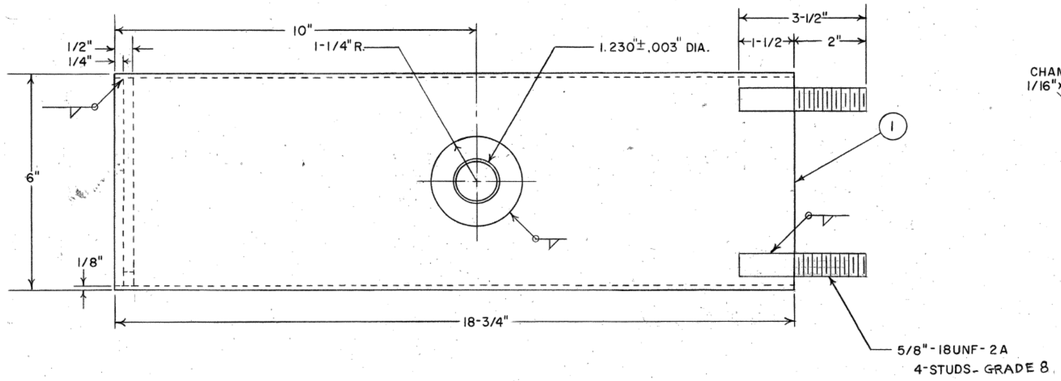

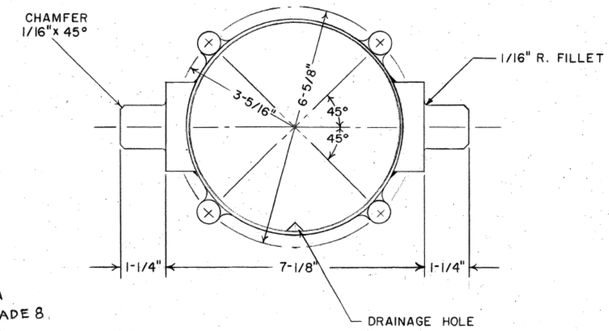

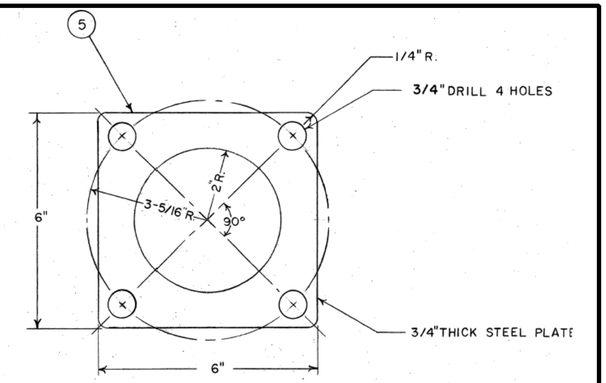

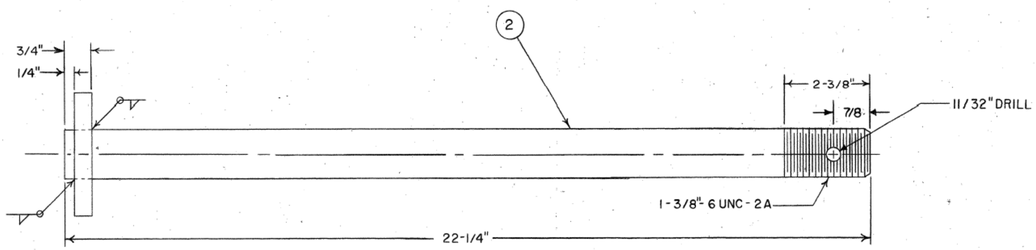

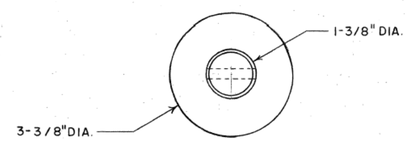

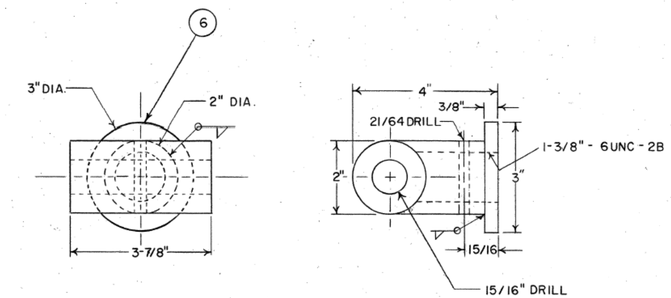

NOTE

TENSION ROD ASSEMBLY IS COMPOSED OF ITEMS (2) AND (6)

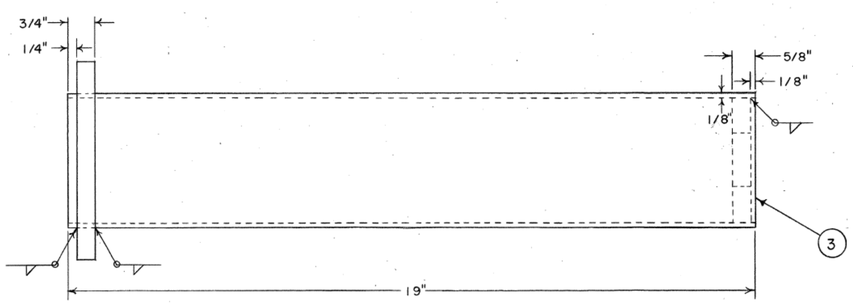

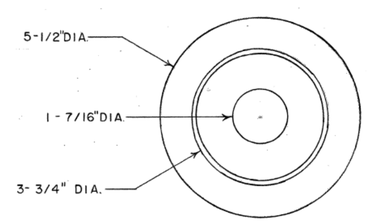

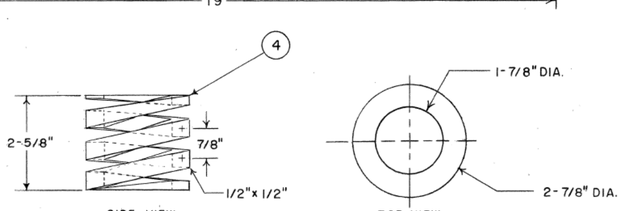

ITEM	NAME	QTY
1	OUTSIDE TUBE ASSEMBLY	1
2	TENSION ROD	1
3	INSIDE TUBE ASSEMBLY	1
4	RECOIL SPRING	1
5	COVER PLATE	1
6	PLOW COUPLING	1

MAT'L:

PLATE ____ STRUCTURAL STEEL QUALITY
TUBING ____ DRAWN OVER MANDREL CARBON STEEL
ROUND STOCK W/O THREADING ____ COLD FINISHED STEEL
ROUND STOCK W/THREADING ____ COLD FINISHED MEDIUM CARBON STEEL
SPRING ____ SPRING STEEL

NEW JERSEY TURNPIKE AUTHORITY
MAINTENANCE DEPARTMENT
STANDARD SNOW PLOW DETAILS

TRIP SPRING ASSEMBLY

THIS DRAWING IS BASED UPON NEW JERSEY DEPARTMENT OF TRANSPORTATION - DIVISION OF CONSTRUCTION AND MAINTENANCE - BUREAU OF EQUIPMENT - DRAWING NO. 4-160-1 - DATED DECEMBER 3, 1974; LAST REVISED SEPT. 4, 1995 (REV. #3)

OFFICE OF THE DIRECTOR OF MAINTENANCE
WOODBRIDGE, NEW JERSEY

DRAWING
SPP-4-160-1

PROCUREMENT NO.:

PRICE LINES:

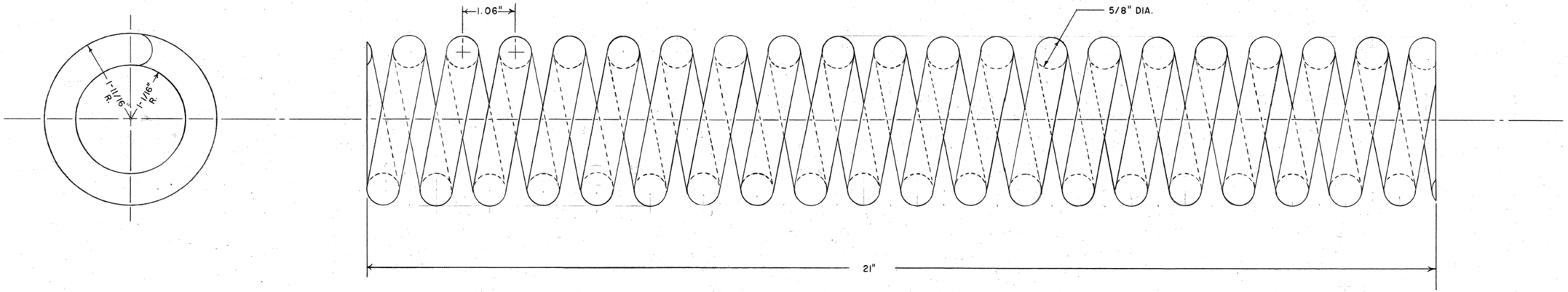

INSIDE SPRING

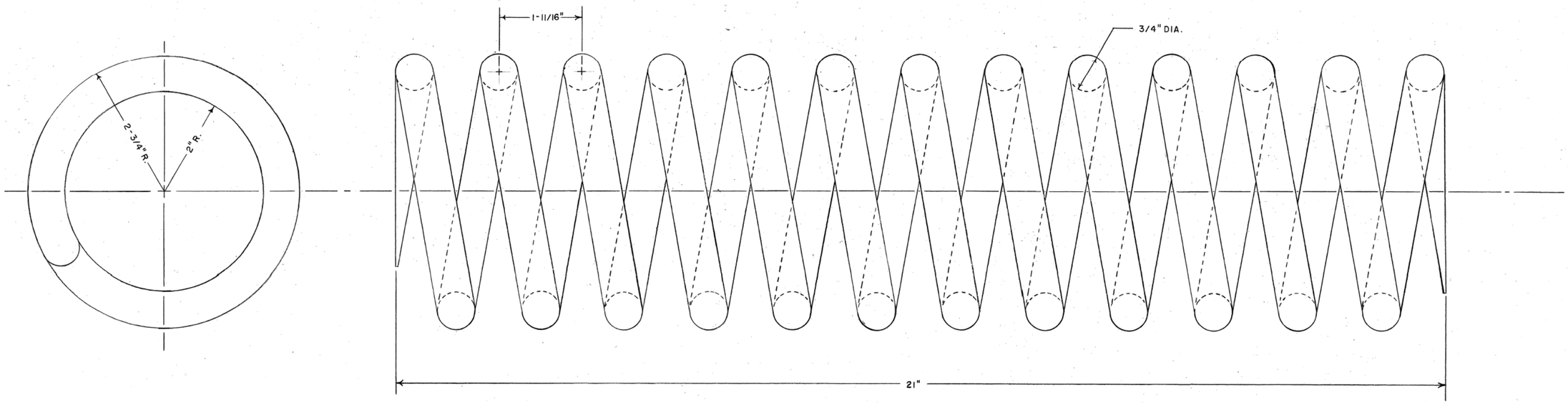

OUTSIDE SPRING

NOTES
1. ENDS OF SPRINGS TO BE TAPERED GROUND AND SQUARED

MATL:
ALLOY SPRING STEEL-5160H-HOT WOUND, TO BE MANUFACTURED TO ASTM SPEC A-125 LR MAT'L EQUAL OR GREATER THAN ASTM-A689, A-29 AND A-304

NEW JERSEY TURNPIKE AUTHORITY
MAINTENANCE DEPARTMENT
STANDARD SNOW PLOW DETAILS

TRIP SPRING ASSEMBLY

THIS DRAWING IS BASED UPON NEW JERSEY DEPARTMENT OF TRANSPORTATION - DIVISION OF CONSTRUCTION AND MAINTENANCE - BUREAU OF EQUIPMENT - DRAWING NO. 4-160-2 - DATED DECEMBER 6, 1974; LAST REVISED DEC. 6, 1974

OFFICE OF THE DIRECTOR OF MAINTENANCE
WOODBRIDGE, NEW JERSEY

DRAWING
SPP-4-160-2

PROCUREMENT NO.:

PRICE LINES:

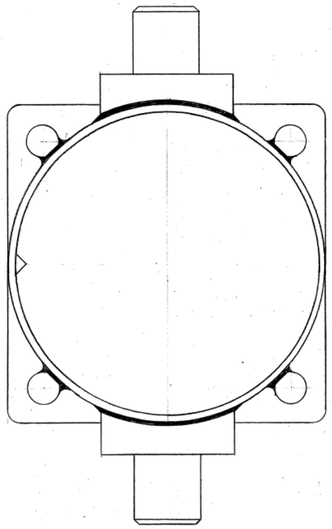

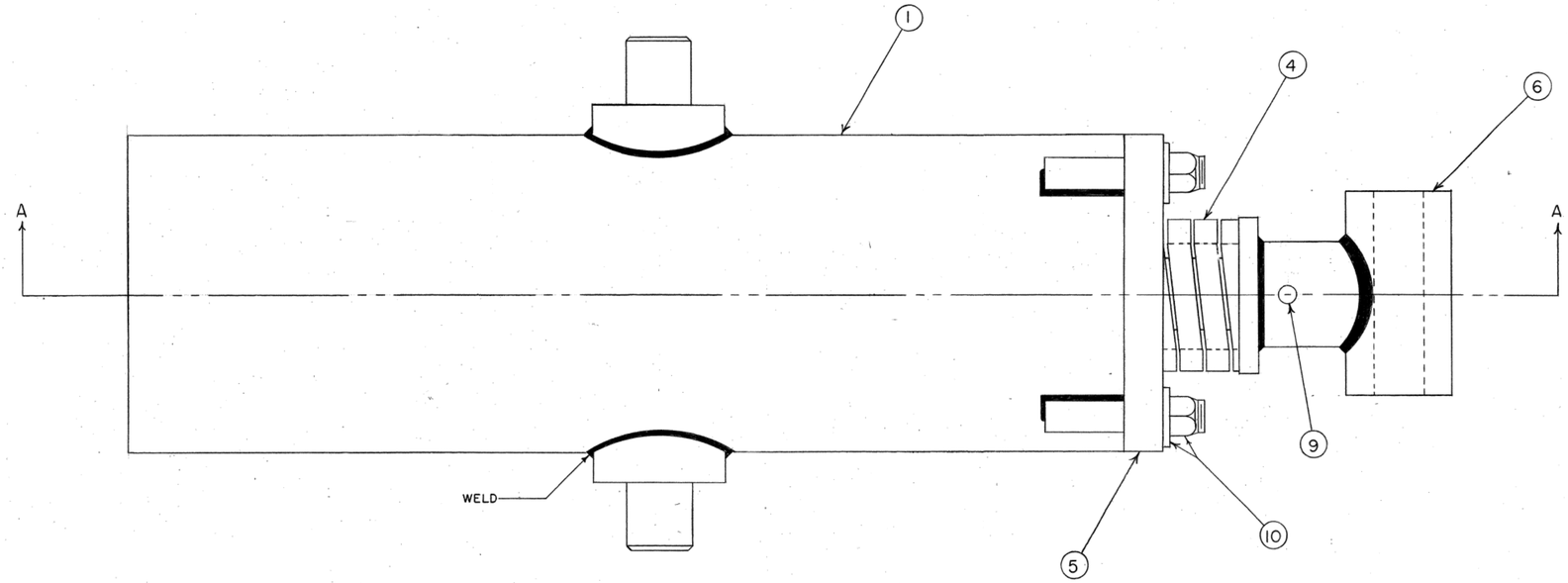

ITEM	NAME	QTY.	DWG. NO.
1	OUTSIDE TUBE ASSEMBLY	1	4-160-1, ITEM 1
2	TENSION ROD	1	4-160-1, ITEM 2
3	INSIDE TUBE ASSEMBLY	1	4-160-1, ITEM 3
4	RECOIL SPRING	1	4-160-1, ITEM 4
5	COVER PLATE	1	4-160-1, ITEM 5
6	PLOW COUPLING	1	4-160-1, ITEM 6
7	INSIDE SPRING	1	4-160-2
8	OUTSIDE SPRING	1	4-160-2
9	5/16" B.H. RIVET	1	STD.
10	5/8" X 18UNF ELAS. STOP NUT & WASHER	4 EA.	STD.

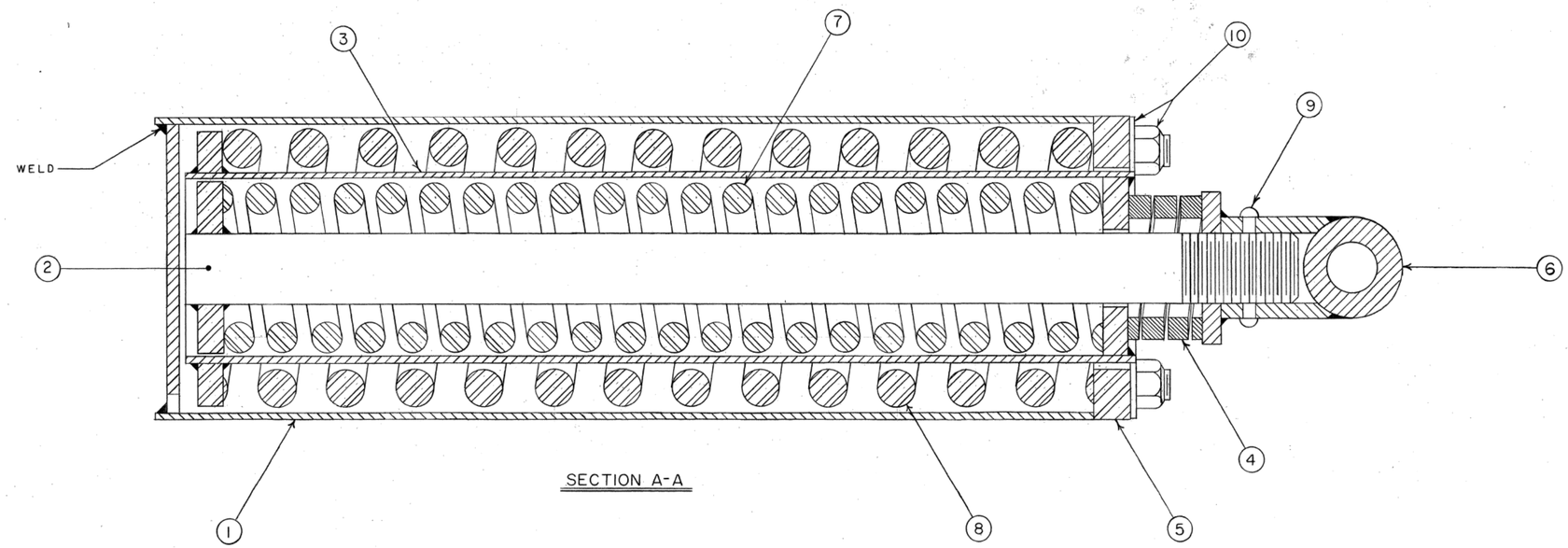

SECTION A-A

NOTES

1. SECTION LINING DOES NOT REPRESENT TYPE OF MATERIAL, ONLY CLARIFICATION BETWEEN PARTS.
2. MATERIAL SPECIFIED ON DWG. NO. 4-160-1 & 4-160-2.
3. DO NOT SCALE.
4. FASTEN PLOW COUPLING TO MOLDBOARD W/ 7/8", 9UNC BOLT, NUT, AND LOCKWASHER.

NEW JERSEY TURNPIKE AUTHORITY
MAINTENANCE DEPARTMENT
STANDARD SNOW PLOW DETAILS

TRIP SPRING ASSEMBLY

THIS DRAWING IS BASED UPON NEW JERSEY DEPARTMENT OF TRANSPORTATION - DIVISION OF CONSTRUCTION AND MAINTENANCE - BUREAU OF EQUIPMENT - DRAWING NO. 4-160-3 - DATED DECEMBER 13, 1973; LAST REVISED SEPT. 7, 1977 (REV. #1)

OFFICE OF THE DIRECTOR OF MAINTENANCE
WOODBRIDGE, NEW JERSEY

DRAWING
SPP-4-160-3

PROCUREMENT NO.:

PRICE LINES:

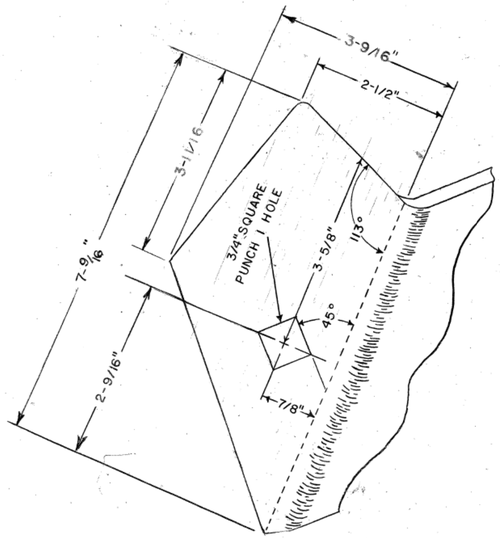

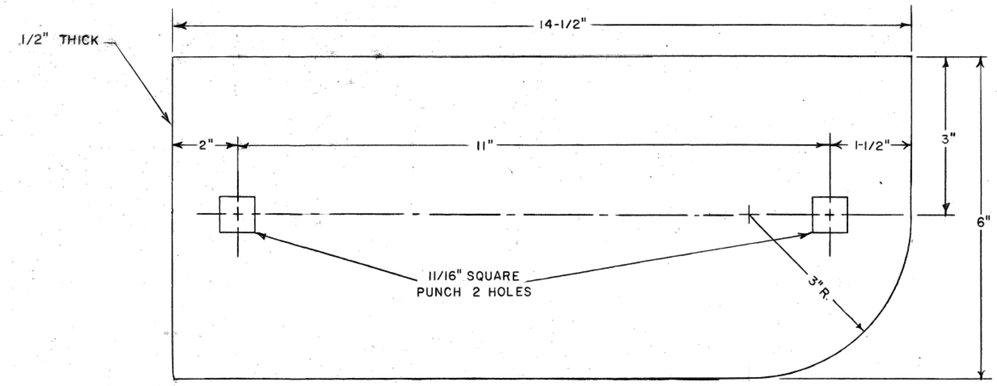

OUTER NOSE PIECE

SCALE: 3/4" = 1"

MAT'L: HIGH CARBON STEEL

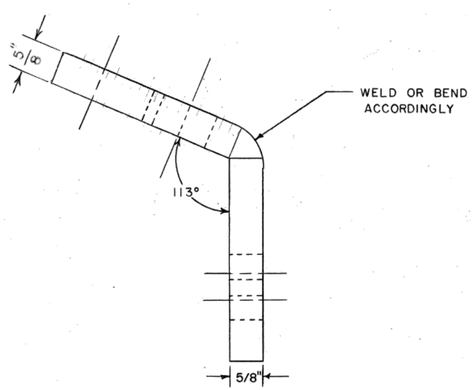

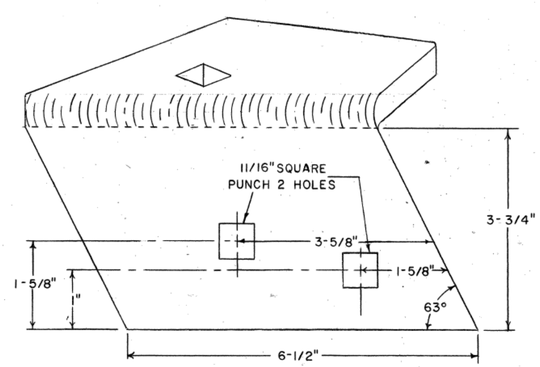

INNER NOSE PIECE

SCALE: 3/4" = 1"

MAT'L: HIGH CARBON STEEL

NOTES

1. REMOVE ALL SHARP EDGES AND BURRS.
2. ALL WELDS (IF USED) TO BE CONTINUOUS.
3. FASTEN INNER AND OUTER NOSE PIECE TO MOLDBOARD END PLATE WITH TWO 5/8" X 11 UNC X 2-1/2" CARRIAGE BOLTS, NUTS, AND LOCKWASHERS.

NEW JERSEY TURNPIKE AUTHORITY
MAINTENANCE DEPARTMENT
STANDARD SNOW PLOW DETAILS

INNER & OUTER NOSE PIECE

THIS DRAWING IS BASED UPON NEW JERSEY DEPARTMENT OF TRANSPORTATION - DIVISION OF CONSTRUCTION AND MAINTENANCE - BUREAU OF EQUIPMENT - DRAWING NO. 4-164 - DATED FEBRUARY 11, 1975; LAST REVISED FEB. 28, 1984 (REV. #3)

OFFICE OF THE DIRECTOR OF MAINTENANCE
WOODBRIDGE, NEW JERSEY

DRAWING
SPP-4-164

PROCUREMENT NO.:

PRICE LINES:

NOTES

1. ALL VERTICAL RIBS TO HAVE 3/16" FILLET WELDS, 4" LENGTH, 8" PITCH STARTING AT THE TOP AND BOTTOM OF EACH RIB ON BOTH SIDES AND STAGGERED INTERMITTENTLY THERE AFTER IN BETWEEN. (SEE 5TH RIB)
2. ALL HORIZONTAL RIBS TO BE SECURELY WELDED AT EACH END, 3/16" FILLET WELD, 2" LENGTH 8" PITCH. (SEE HORIZONTAL RIB ITEM NO. 22)
3. ANGLE-BLADE REINFORCING PLATE ASSY. TO HAVE 1/4" FILLET WELD 4" LENGTH, 12" PITCH.
4. UNLESS OTHERWISE NOTED ALL OTHER WELDS TO BE CONTINUOUS 3/16" FILLET.
5. BLADE TO BE FASTEN TO BLADE REINFORCING PLATE W/ 5/8" X 11 UNC X 2" CARRIAGE BOLTS, NUTS, LOCKWASHERS. LAST 2 BOLTS OF EACH END TO BE 2-1/2" LONG.
6. SHOE ANGLES TO BE ANGLED 35° FROM THE STRAIGHT POSITION, DRILL TWO 11/16" HOLES IN EACH TO ACCOMMODATE SHOE (DWG. NO. 4-147).
7. MOLDBOARD SKIN MUST EXTEND TO BOTTOM EDGE OF BLADE REINFORCING PLATE, TACK WELD ONLY.
8. DIMENSION "D" TO BE 2" C. TO C.
9. DIMENSION "C" TO BE 13" MEASURED ON BACK CURVE OF MOLDBOARD.
10. HORIZONTAL HOLE LOCATION IN MOLDBOARD END PLATE TO BE DETERMINED AT TIME OF INSTALLATION OF INNER AND OUTER NOSE PIECE.
11. INSTALL SNOW SHIELD ON TOP FRONT EDGE OF MOLDBOARD, SEE DWG. NO. 4-170 FOR DETAILED DWG. OF SNOW SHIELD. 60 PER 1/2" BOLTS & NUTS

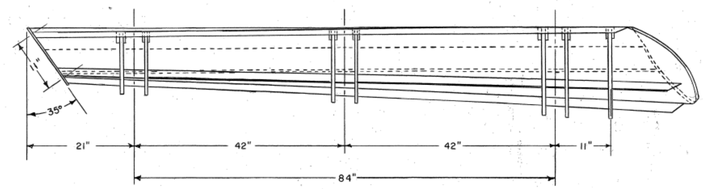

ITEM	NAME	QTY.	MAT'L	SIZE	REMARKS
1	MOLDBOARD SKIN	1	H.R.S.	10 GAUGE	
2	BLADE	1			SEE LOWER L.H. CORNER
3	BLADE REINFORCING PLATE	1	STR. STL.	9" X 10'-6" X 1/2"	
4	ANGLE	1	" "	4" X 4" X 3/4" X 10'-6"	
5	1 ST VERTICAL RIB	1	H.R.S.	1/2" X 9-13/16" R. X LG. REQ'D	
6	2 ND " "	1	H.R.S.	1/2" X 10" R. " "	
7	3 RD " "	1	H.R.S.	1/2" X 12-1/2" R. " "	
8	4 TH " "	1	H.R.S.	1/2" X 12-5/8" R. " "	
9	5 TH " "	1	H.R.S.	1/2" X 14-7/16" R. " "	
10	6 TH " "	1	H.R.S.	1/2" X 15-11/16" R. " "	
11	7 TH " "	1	H.R.S.	1/2" X 16-1/4" R. " "	
12	BOXING PLATE & GUSSET	1	H.R.S.	1/4" X 9" X 3"	
13	END PLATE	1	H.R.S.	1/4" X 13-5/8" X 27-1/4"	
14	ROD	1	H.R.S.	1/2" DIA. X 66"	
15	FLAT PLATE	14	H.R.S.	3/8" X 1-1/2" X 2-1/4"	
16	SHORT HORIZ. RIB	3	H.R.S.	1/4" X 2" X 4-1/4"	
17	" " "	3	H.R.S.	1/4" X 2" X 4-1/4"	
18	HORIZ. RIB	1	H.R.S.	1/4" X 2" X 14-1/8"	
19	" "	1	H.R.S.	1/4" X 2" X 13-1/8"	
20	" "	1	H.R.S.	1/4" X 2" X 37-1/8"	
21	" "	1	H.R.S.	1/4" X 2" X 37-1/8"	
22	" "	1	H.R.S.	1/4" X 2" X 37-1/8"	
23	" "	1	H.R.S.	1/4" X 2" X 37-1/8"	
24	" "	1	H.R.S.	1/4" X 2" X 8-5/8"	
25	" "	1	H.R.S.	1/4" X 2" X 8-5/8"	
26	" "	1	H.R.S.	1/4" X 2" X 14-1/2"	
27	" "	1	H.R.S.	1/4" X 2" X 14-1/2"	
28	SHOE ANGLES	2	STR. STL.	3" X 3" X 1/2" X LENGTH REQ'D	
29	GUSSETS	8	H.R.S.	1/2" X 4" X 4"	CUT & SHAPED ACCORDINGLY
30	REINFORCING PLATE	1	H.R.S.	3/8" X 4" X 22"	
31	SNOW SHIELD	1	RUBBER BELTING	120" x 12" x 3/8"	
32	BACKING PLATE	1	H.R.S.	120" x 2" x 1/4"	

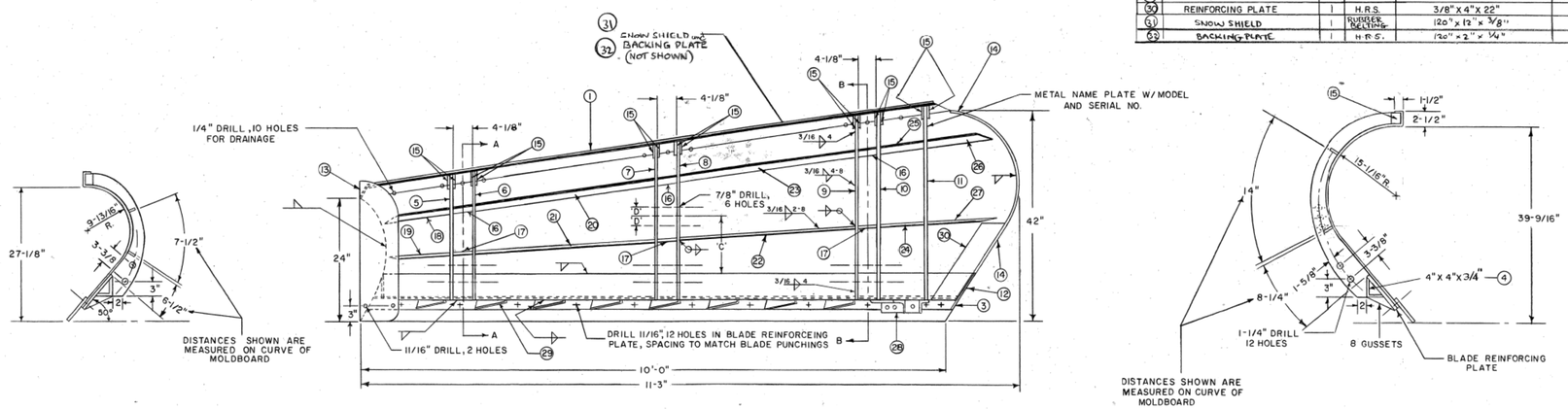

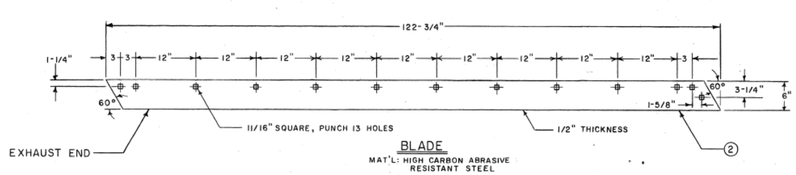

NEW JERSEY TURNPIKE AUTHORITY
MAINTENANCE DEPARTMENT
STANDARD SNOW PLOW DETAILS

SNOW PLOW
MODEL NO O - R 11.25 - (24, 42) - (13,18) - I MOD

THIS DRAWING IS BASED UPON NEW JERSEY DEPARTMENT OF TRANSPORTATION - DIVISION OF CONSTRUCTION AND MAINTENANCE - BUREAU OF EQUIPMENT - DRAWING NO. 4-166 - DATED APRIL 8, 1975; LAST REVISED NOV. 16, 1999 (REV. #2)

OFFICE OF THE DIRECTOR OF MAINTENANCE
WOODBRIDGE, NEW JERSEY

DRAWING
SPP-4-166

PROCUREMENT NO.:

PRICE LINES:

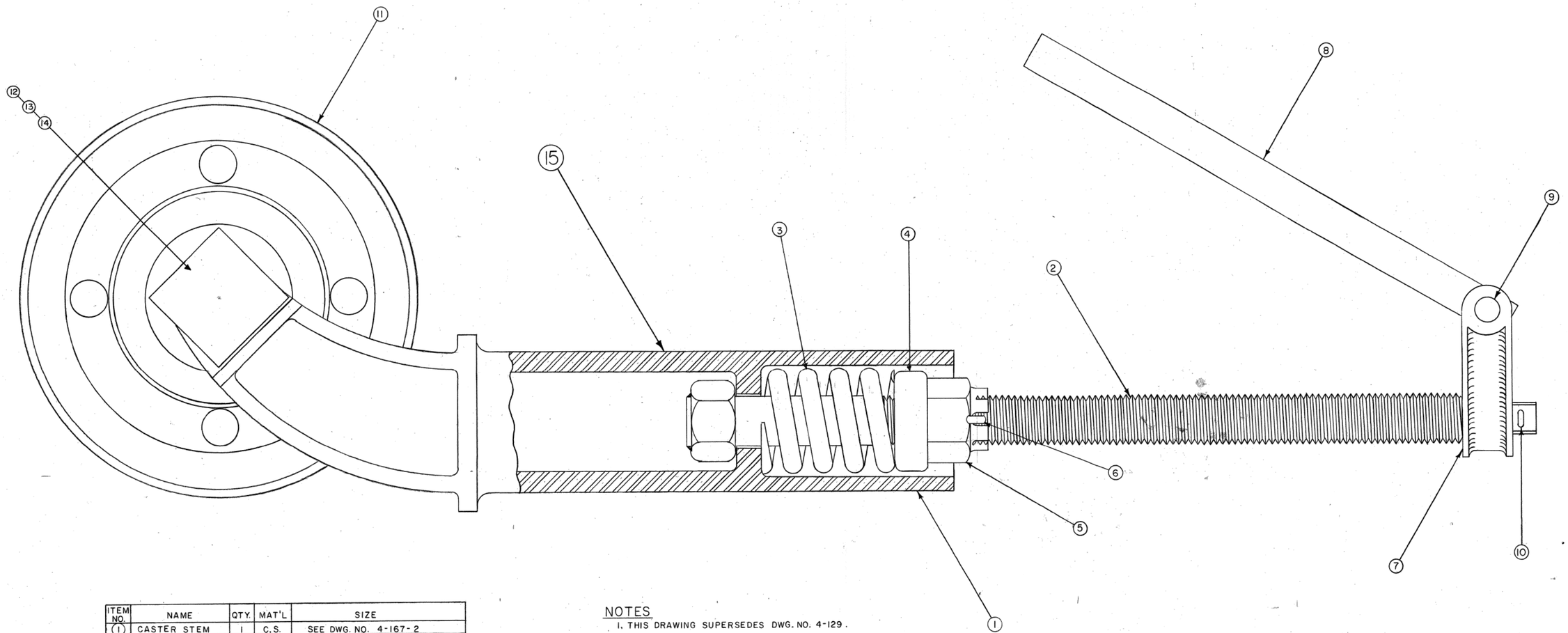

ITEM NO.	NAME	QTY.	MAT'L	SIZE
1	CASTER STEM	1	C.S.	SEE DWG. NO. 4-167-2
2	ADJUSTING BOLT	1	——	" " " 4-167-3
3	SPRING	1	SPR.STL.	" " " 4-167-3
4	BEARING	1	——	" " " 4-167-3
5	CASTLE HEX NUT	1	STD	1" X 8 UNC
6	COTTER PIN	1	STD	3/16" X 1-1/2"
7	FORK	1	C.S.	SEE DWG. NO. 4-167-3
8	HANDLE	1	H.R.S.	" " " 4-167-3
9	RIVET	1	STD.	3/8" X 1-5/8"
10	COTTER PIN	1	STD.	1/4" X 1-1/4"
11	WHEEL W/ BEARING	1	——	SEE DWG. NO. 4-125
12	AXLE	1	——	" " " 4-121
13	SLOTTED HEX NUT	1	STD.	1-1/8" X 12 UNF
14	COTTER PIN	1	STD.	1/4" X 2-1/2"
15	COMPLETE CASTER ASSEMBLY			

NOTES

1. THIS DRAWING SUPERSEDES DWG. NO. 4-129.

NEW JERSEY TURNPIKE AUTHORITY
MAINTENANCE DEPARTMENT
STANDARD SNOW PLOW DETAILS

CASTER ASSEMBLY

THIS DRAWING IS BASED UPON NEW JERSEY DEPARTMENT OF TRANSPORTATION - DIVISION OF CONSTRUCTION AND MAINTENANCE - BUREAU OF EQUIPMENT - DRAWING NO. 4-167-1 - DATED APRIL 3, 1973; LAST REVISED FEB. 23, 1977 (REV. #1)

OFFICE OF THE DIRECTOR OF MAINTENANCE
WOODBRIDGE, NEW JERSEY

DRAWING
SPP-4-167-1

PROCUREMENT NO.:

PRICE LINES:

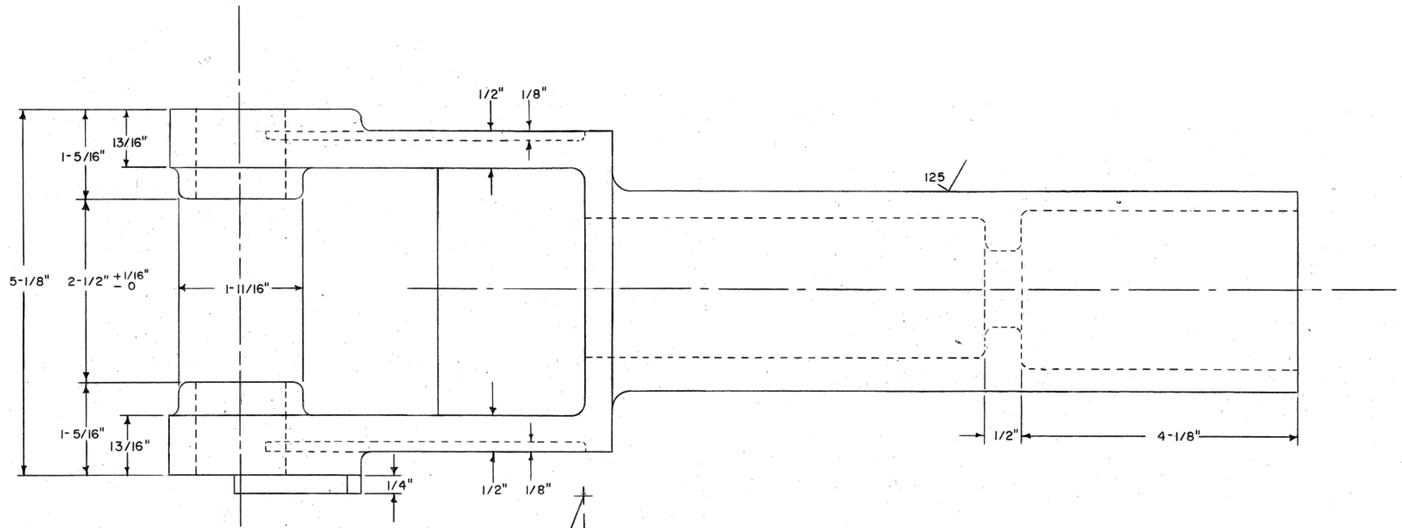

NOTES

1. ALL FILLETS AND ROUNDS TO BE 1/8" R. UNLESS OTHERWISE NOTED.

CASTER STEM

MAT'L: CAST STEEL

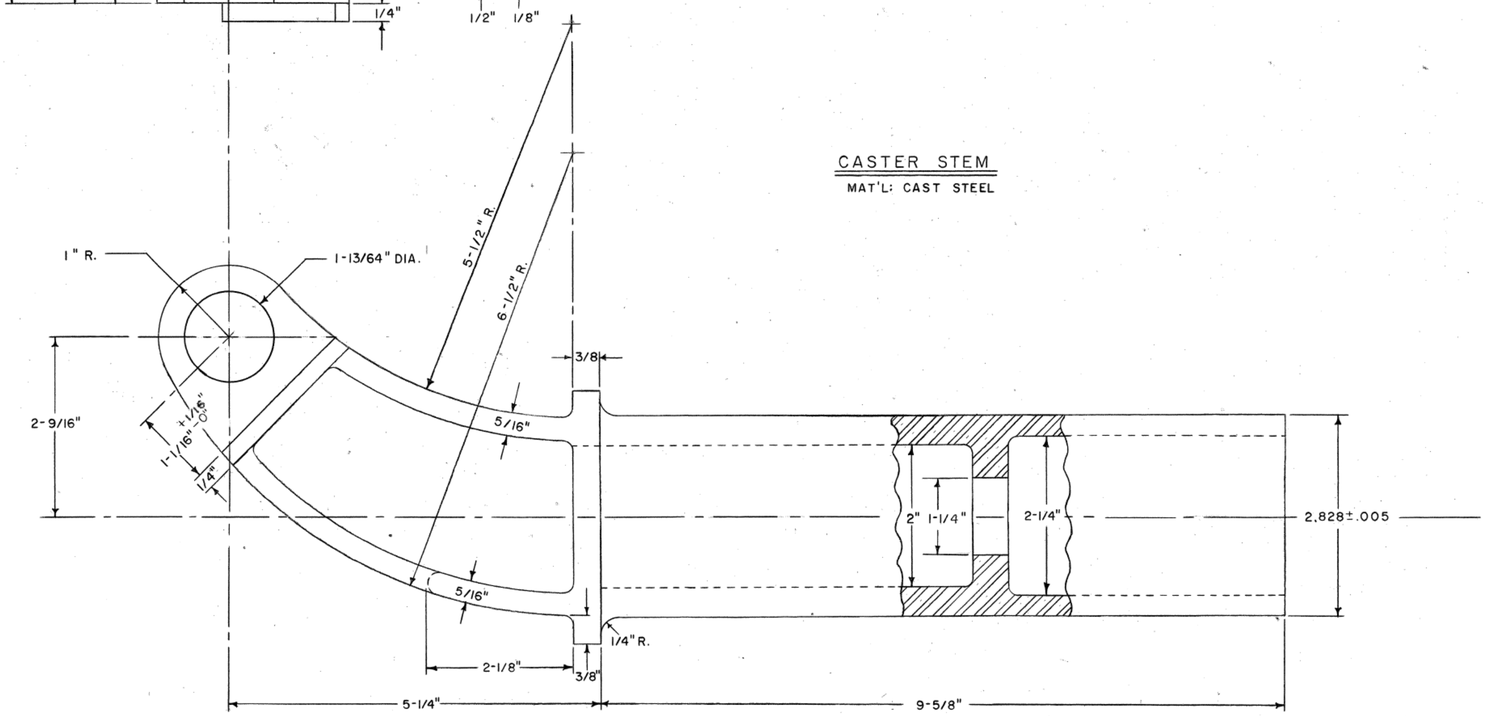

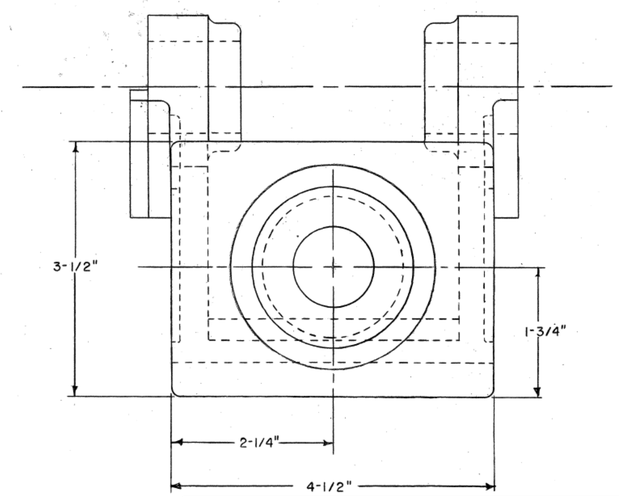

NEW JERSEY TURNPIKE AUTHORITY
MAINTENANCE DEPARTMENT
STANDARD SNOW PLOW DETAILS

CASTER ASSEMBLY

THIS DRAWING IS BASED UPON NEW JERSEY DEPARTMENT OF TRANSPORTATION - DIVISION OF CONSTRUCTION AND MAINTENANCE - BUREAU OF EQUIPMENT - DRAWING NO. 4-167-2 - DATED APRIL 1, 1975; LAST REVISED MARCH 5, 1986 (REV. #4)

OFFICE OF THE DIRECTOR OF MAINTENANCE
WOODBRIDGE, NEW JERSEY

DRAWING
SPP-4-167-2

PROCUREMENT NO.:

PRICE LINES:

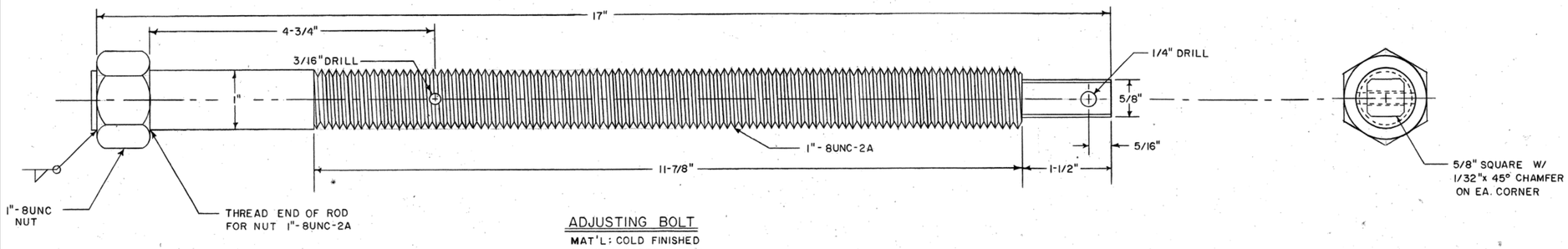

ADJUSTING BOLT

MAT'L: COLD FINISHED MEDIUM CARBON STEEL HEAT TREATED

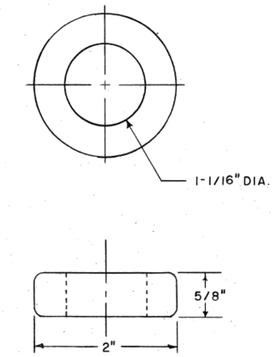

BEARING

MAT'L: COLD FINISHED MEDIUM CARBON STEEL

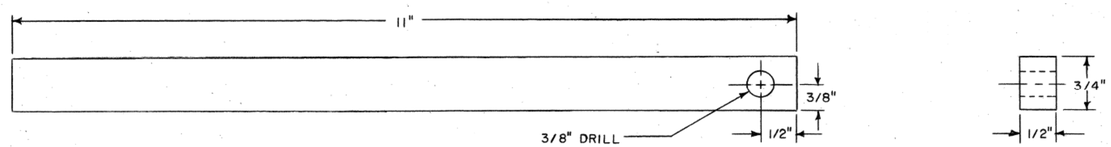

HANDLE

MAT'L: HOT ROLLED STEEL

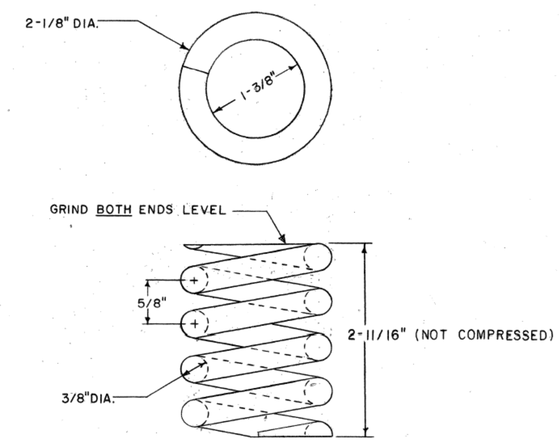

SPRING

MAT'L: SPRING STEEL

NOTES

1. ALL FILLETS AND ROUNDS UNLESS OTHERWISE SPECIFIED TO BE 1/8" R.

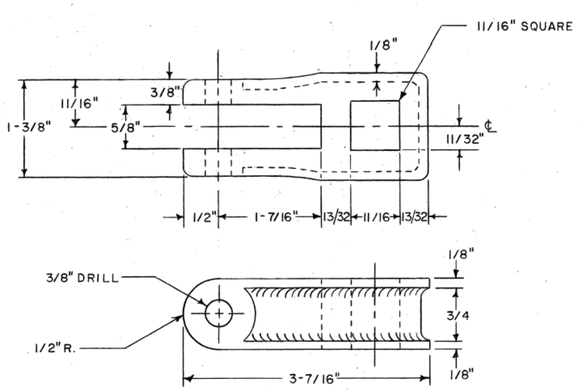

FORK

MAT'L: CAST STEEL

THIS DRAWING IS BASED UPON NEW JERSEY DEPARTMENT OF TRANSPORTATION - DIVISION OF CONSTRUCTION AND MAINTENANCE - BUREAU OF EQUIPMENT - DRAWING NO. 4-167-3

NEW JERSEY TURNPIKE AUTHORITY
MAINTENANCE DEPARTMENT
STANDARD SNOW PLOW DETAILS

CASTER ASSEMBLY

OFFICE OF THE DIRECTOR OF MAINTENANCE
WOODBRIDGE, NEW JERSEY

DRAWING

SPP-4-167-3

PROCUREMENT NO.:

PRICE LINES:

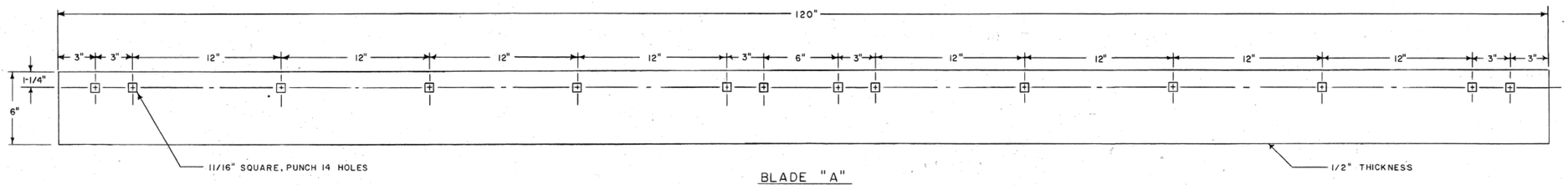

BLADE "A"

MAT'L: HIGH CARBON ABRASIVE RESISTANT STEEL SAE 1091

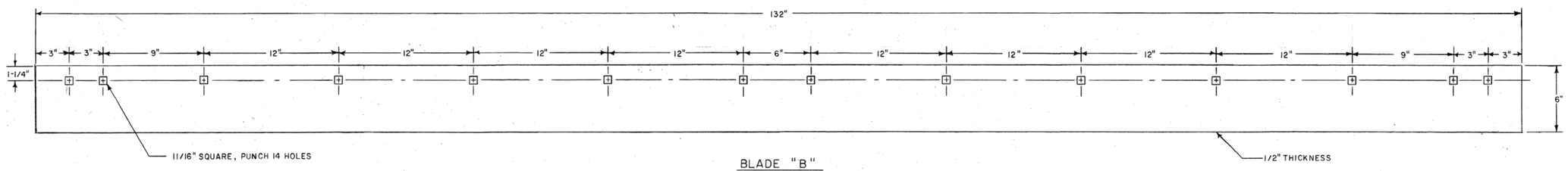

BLADE "B"

MAT'L: HIGH CARBON ABRASIVE RESISTANT STEEL SAE 1091

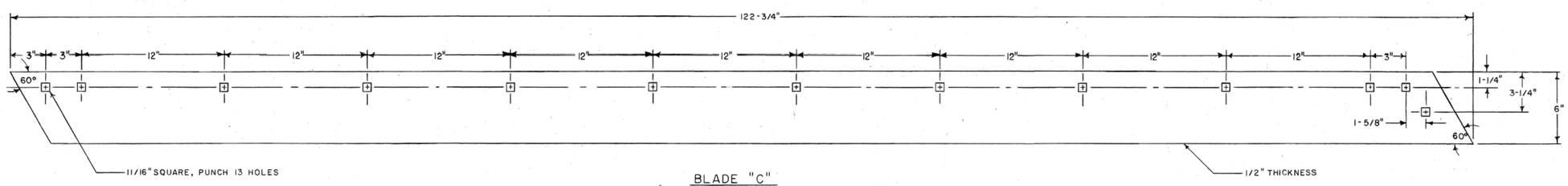

BLADE "C"

MAT'L: HIGH CARBON ABRASIVE RESISTANT STEEL SAE 1091

NEW JERSEY TURNPIKE AUTHORITY
MAINTENANCE DEPARTMENT
STANDARD SNOW PLOW DETAILS

SNOW PLOW BLADES

THIS DRAWING IS BASED UPON NEW JERSEY DEPARTMENT OF TRANSPORTATION - DIVISION OF CONSTRUCTION AND MAINTENANCE - BUREAU OF EQUIPMENT - DRAWING NO. 4-168 - DATED APRIL 11, 1975; LAST REVISED SEPT. 1, 1995 (REV. #1)

OFFICE OF THE DIRECTOR OF MAINTENANCE
WOODBRIDGE, NEW JERSEY

DRAWING
SPP-4-168

PROCUREMENT NO.:

PRICE LINES:

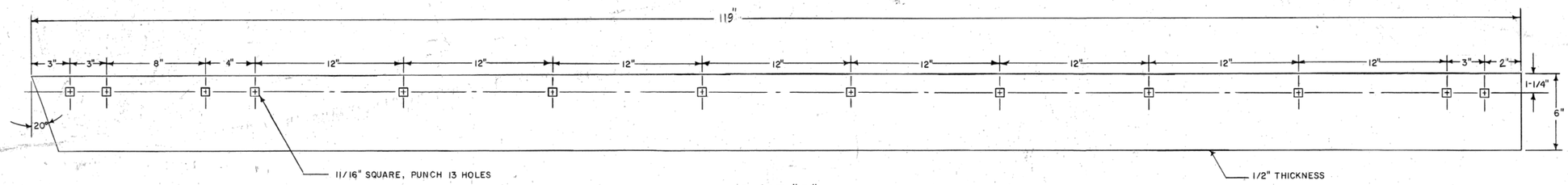

BLADE "D"

MAT'L: HIGH CARBON ABRASIVE RESISTANT STEEL SAE 1091

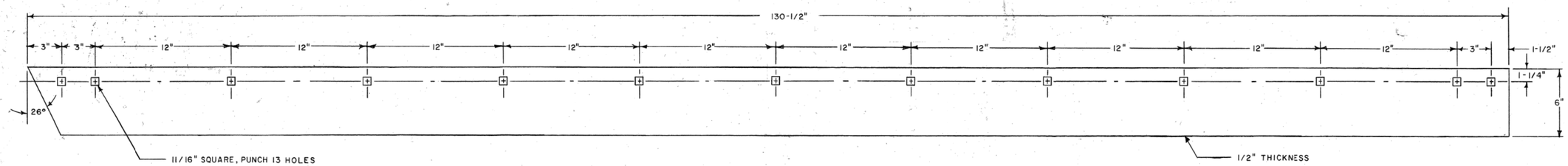

BLADE "E"

MAT'L: HIGH CARBON ABRASIVE RESISTANT STEEL SAE 1091

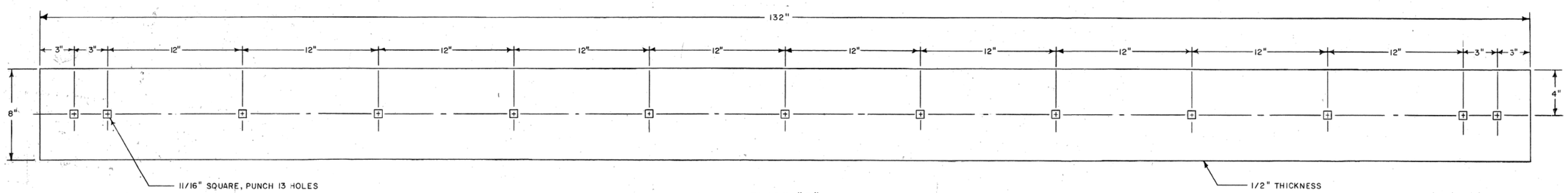

BLADE "F"

MAT'L: HIGH CARBON ABRASIVE RESISTANT STEEL SAE 1091

NEW JERSEY TURNPIKE AUTHORITY
MAINTENANCE DEPARTMENT
STANDARD SNOW PLOW DETAILS

SNOW PLOW BLADES

THIS DRAWING IS BASED UPON NEW JERSEY DEPARTMENT OF TRANSPORTATION - DIVISION OF CONSTRUCTION AND MAINTENANCE - BUREAU OF EQUIPMENT - DRAWING NO. 4-169 - DATED APRIL 10, 1975; LAST REVISED SEPT. 9, 1999 (REV. #1)

OFFICE OF THE DIRECTOR OF MAINTENANCE
WOODBRIDGE, NEW JERSEY

DRAWING
SPP-4-169

PROCUREMENT NO.:

PRICE LINES:

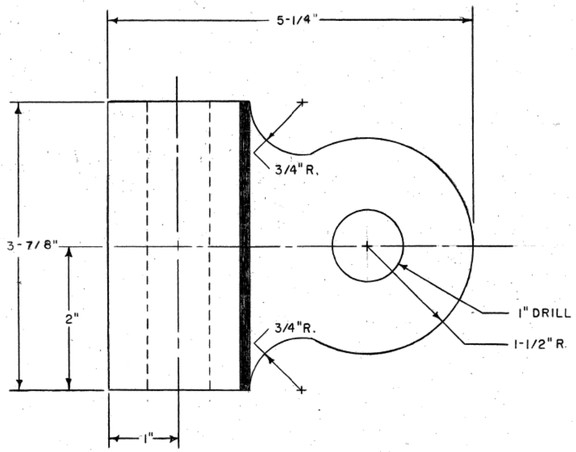

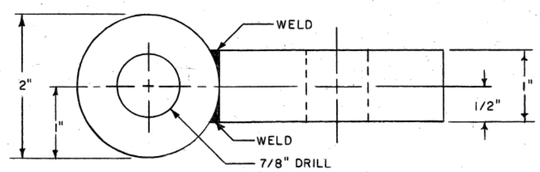

SWIVEL BLOCK

MAT'L: HOT ROLLED STEEL

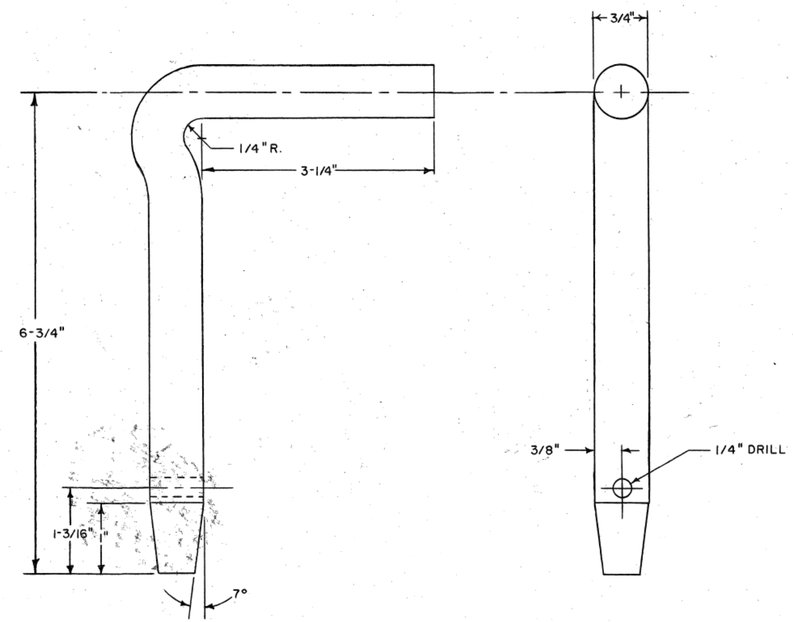

LOCKING PIN

MAT'L: HOT ROLLED STEEL

NOTES

1. SWIVEL BLOCK TO BE CONNECTED TO MOLDBOARD WITH 3/4" X 10 UNC X 6-1/2" BOLT, NUT, & LOCKWASHER.
2. 1/4" COTTER PIN TO BE INSERTED THRU LOWER 1/4" HOLE OF LOCKING PIN AFTER INSTALLATION.

NEW JERSEY TURNPIKE AUTHORITY
MAINTENANCE DEPARTMENT
STANDARD SNOW PLOW DETAILS

SWIVEL BLOCK & LOCKING PIN

THIS DRAWING IS BASED UPON NEW JERSEY DEPARTMENT OF TRANSPORTATION - DIVISION OF CONSTRUCTION AND MAINTENANCE - BUREAU OF EQUIPMENT - DRAWING NO. 4-173 - DATED MAY 8, 1975; LAST REVISED JUNE 25, 1985 (REV. #1)

OFFICE OF THE DIRECTOR OF MAINTENANCE
WOODBRIDGE, NEW JERSEY

DRAWING
SPP-4-173

PROCUREMENT NO.:

PRICE LINES:

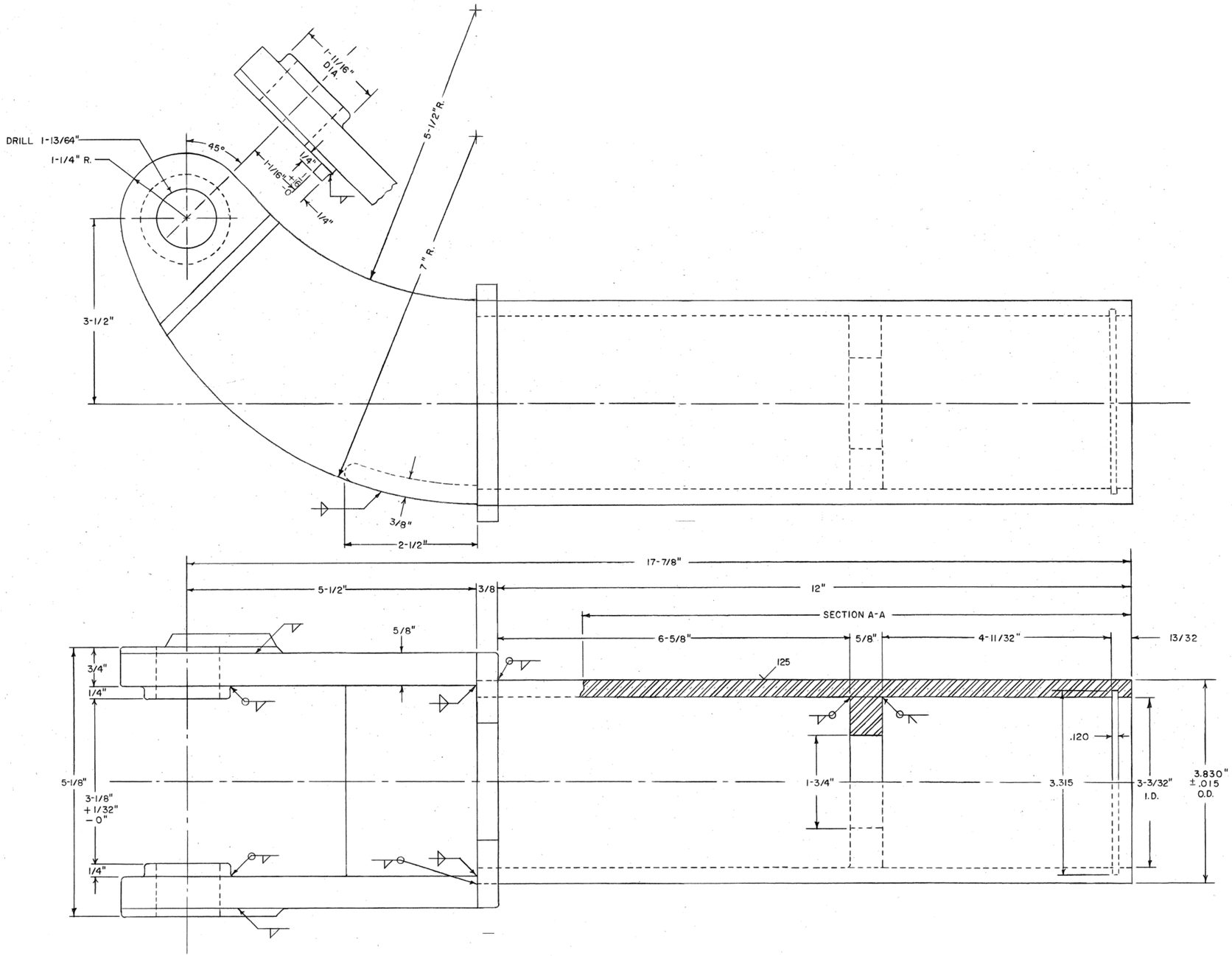

CASTER STEM

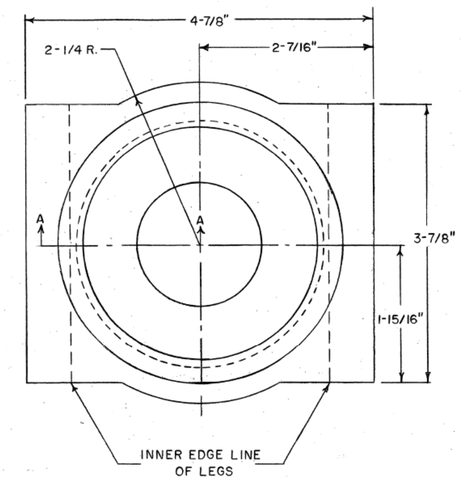

NOTES

1. ALL WELDS TO BE CONTINUOUS.
2. REMOVE ALL BURRS AND SHARP EDGES.
3. DO NOT SCALE.

MAT'L:

PLATE _____ STRUCTURAL STEEL QUALITY
TUBING _____ COLD DRAWN SEAMLESS CARBON STEEL

THIS DRAWING IS BASED UPON NEW JERSEY DEPARTMENT OF TRANSPORTATION - DIVISION OF CONSTRUCTION AND MAINTENANCE - BUREAU OF EQUIPMENT - DRAWING NO. 4-182-1 - DATED AUGUST 29, 1975; LAST REVISED SEPT. 3, 1985 (REV. #3)

NEW JERSEY TURNPIKE AUTHORITY
MAINTENANCE DEPARTMENT
STANDARD SNOW PLOW DETAILS

CASTER ASSEMBLY

OFFICE OF THE DIRECTOR OF MAINTENANCE
WOODBRIDGE, NEW JERSEY

DRAWING
SPP-4-182-1

PROCUREMENT NO.:

PRICE LINES:

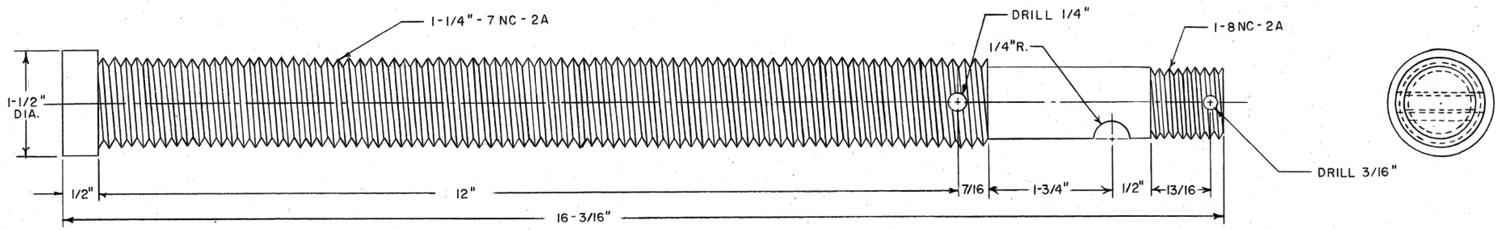

ADJUSTING BOLT

MAT'L: COLD FINISHED, MEDIUM CARBON STEEL HEAT TREATED

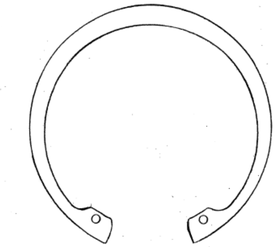

RETAINING RING

TRUARC NO. N5000-312

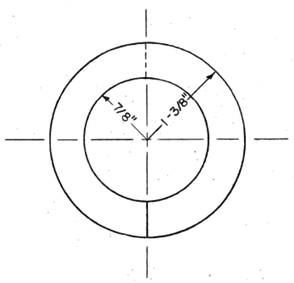

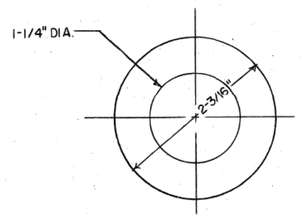

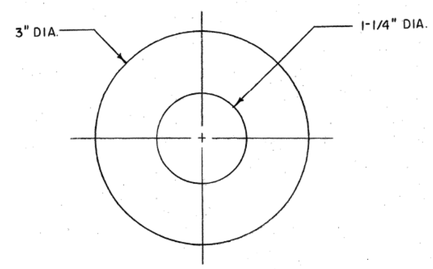

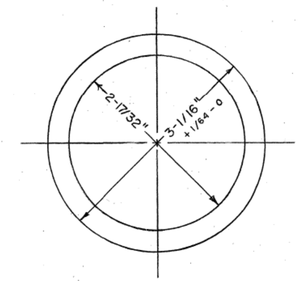

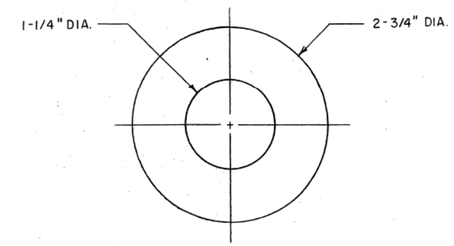

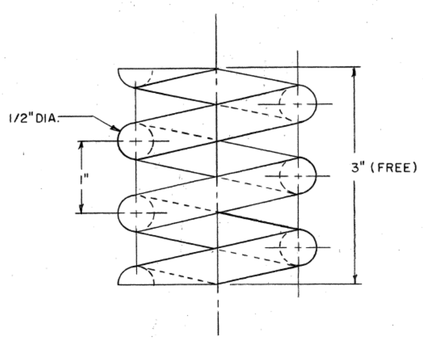

SPRING

MAT'L: SPRING STEEL

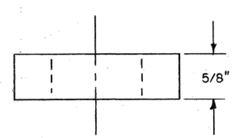

THRUST BEARING

TIMKEN NO. T-126, OR APPROVED EQUAL

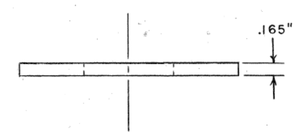

BEARING WASHER

STD. STEEL WASHER

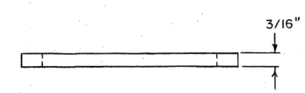

SPACER

MAT'L: HOT ROLLED STEEL

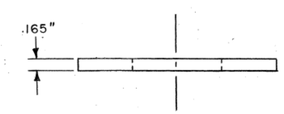

WASHER

STD. STEEL WASHER

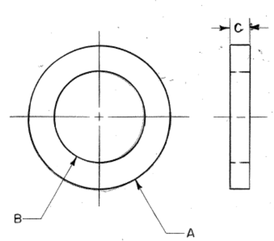

PART NO.	A	B	C
WBS 125	2" O.D.	1-3/16" I.D.	1/8"
WBS 250	2" O.D.	1-3/16" I.D.	1/4"
WBS 500	2" O.D.	1-3/16" I.D.	1/2"
WBS 625	2" O.D.	1-3/16" I.D.	5/8"

SNOWPLOW WHEEL SPACERS

MAT'L: SAE 1040 STEEL

NEW JERSEY TURNPIKE AUTHORITY
MAINTENANCE DEPARTMENT
STANDARD SNOW PLOW DETAILS

CASTER ASSEMBLY

THIS DRAWING IS BASED UPON NEW JERSEY DEPARTMENT OF TRANSPORTATION - DIVISION OF CONSTRUCTION AND MAINTENANCE - BUREAU OF EQUIPMENT - DRAWING NO. 4-182-2 - DATED SEPT 4, 1975; LAST REVISED DEC. 28, 1982 (REV. #2)

OFFICE OF THE DIRECTOR OF MAINTENANCE
WOODBRIDGE, NEW JERSEY

DRAWING
SPP-4-182-2

PROCUREMENT NO.:

PRICE LINES:

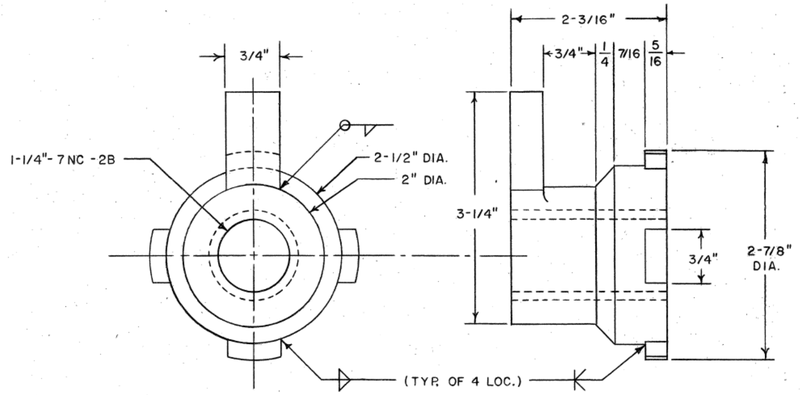

CASTER NUT
MAT'L: MEDIUM CARBON STEEL

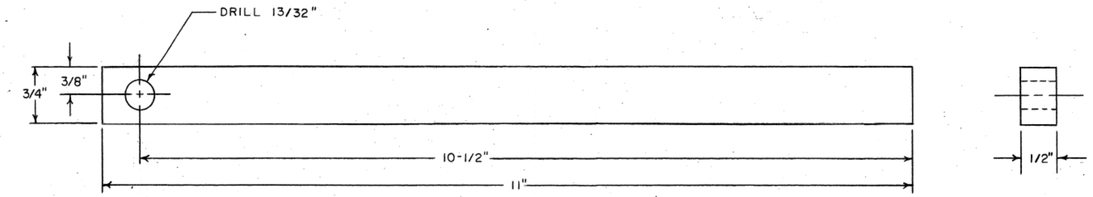

HANDLE
MAT'L: HOT ROLLED STEEL

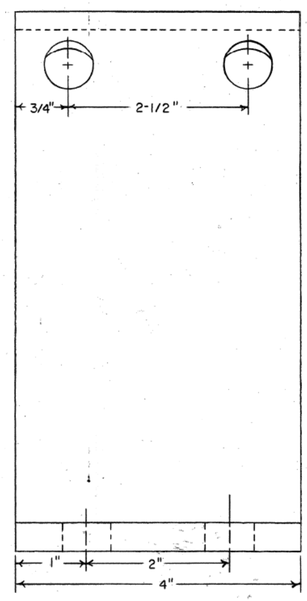

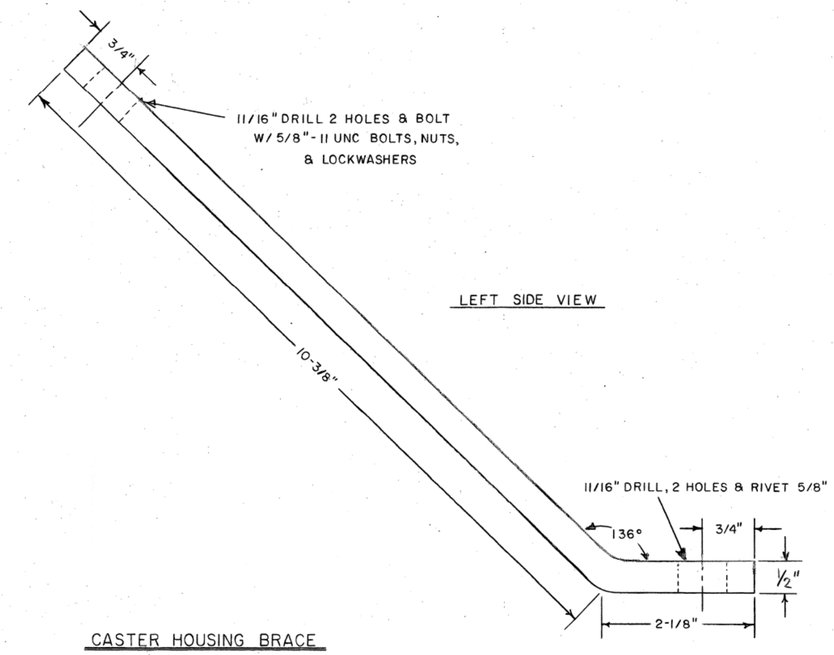

CASTER HOUSING BRACE
MAT'L: STRUCTURAL STEEL

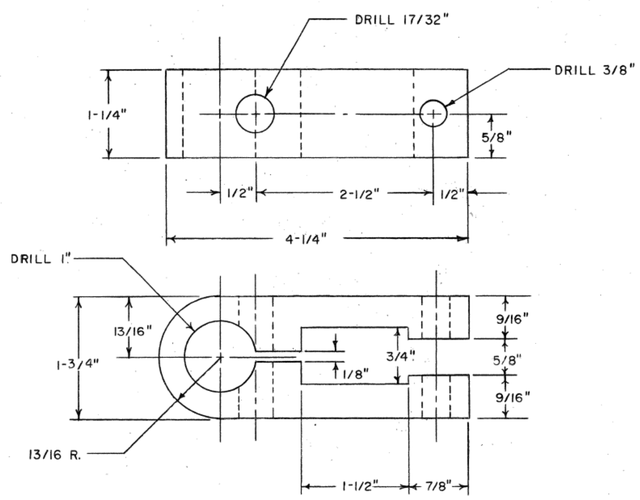

ADJUSTING BOLT FORK
MAT'L: MEDIUM CARBON STEEL

NEW JERSEY TURNPIKE AUTHORITY
MAINTENANCE DEPARTMENT
STANDARD SNOW PLOW DETAILS

CASTER ASSEMBLY

THIS DRAWING IS BASED UPON NEW JERSEY DEPARTMENT OF TRANSPORTATION - DIVISION OF CONSTRUCTION AND MAINTENANCE - BUREAU OF EQUIPMENT - DRAWING NO. 4-182-3 - DATED SEPTEMBER 5, 1975; LAST REVISED SEPT. 5, 1995 (REV. #3)

OFFICE OF THE DIRECTOR OF MAINTENANCE
WOODBRIDGE, NEW JERSEY

DRAWING
SPP-4-182-3

PROCUREMENT NO.:

PRICE LINES:

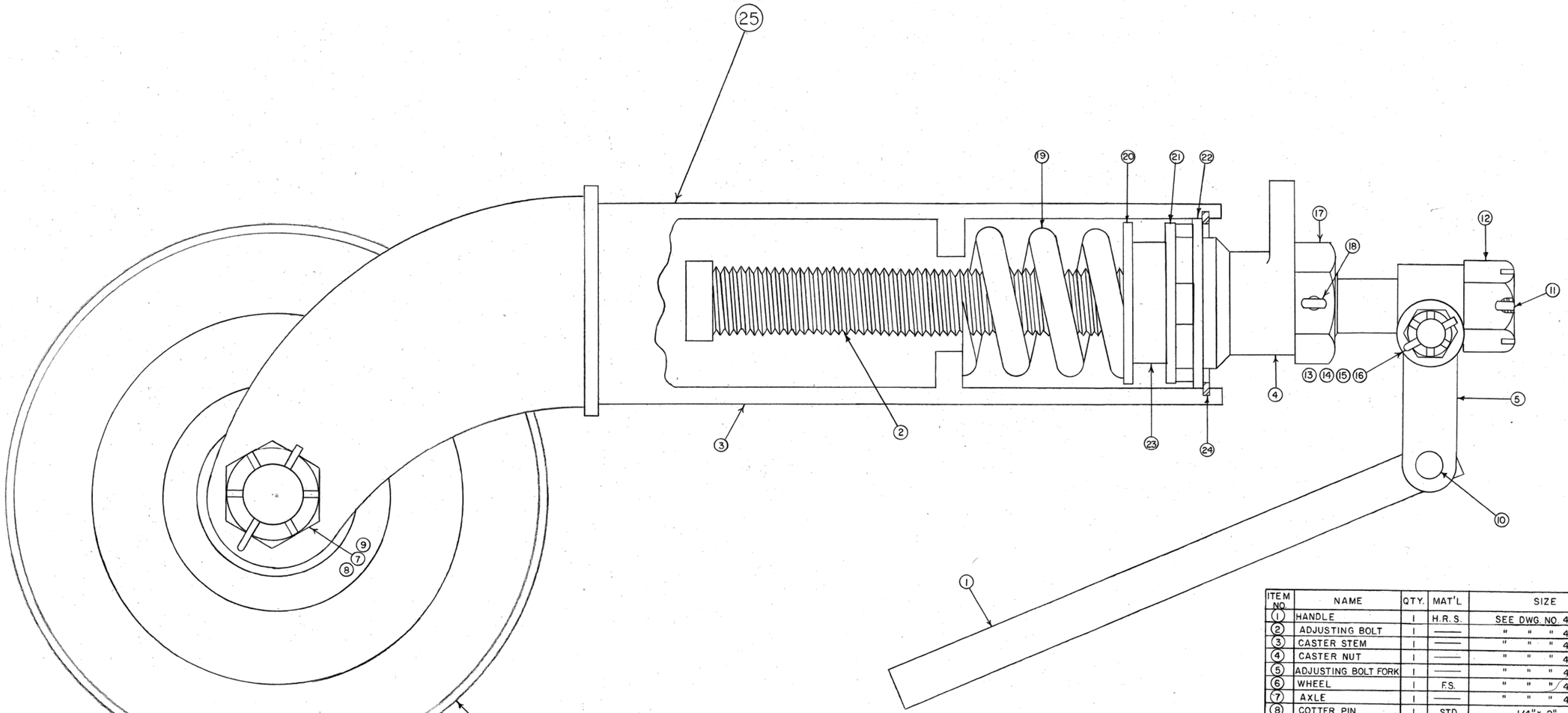

ITEM NO.	NAME	QTY.	MAT'L	SIZE
23	BEARING (THRUST)	1	——	SEE DWG. NO. 4-182-2
24	RETAINING RING	1	——	" " " 4-182-2
25	COMPLETE CASTER ASSEMBLY - 2 REQ'D FOR EA. SNOW PLOW ASSY.			

ITEM NO.	NAME	QTY.	MAT'L	SIZE
1	HANDLE	1	H.R.S.	SEE DWG. NO. 4-182-3
2	ADJUSTING BOLT	1	——	" " " 4-182-2
3	CASTER STEM	1	——	" " " 4-182-1
4	CASTER NUT	1	——	" " " 4-182-3
5	ADJUSTING BOLT FORK	1	——	" " " 4-182-3
6	WHEEL	1	F.S.	" " " 4-155
7	AXLE	1	——	" " " 4-121
8	COTTER PIN	1	STD.	1/4" x 2"
9	SLOTTED NUT	1	STD.	1-1/8" X 12 UNF
10	RIVET PIN	1	STD.	3/8"
11	COTTER PIN	1	STD.	3/16" x 2"
12	SLOTTED HEX NUT	1	STD.	1" X 8 NC
13	BOLT - HEX HD.	1	STD.	1/2" X 20 UNF
14	WASHER	1	STD.	1/2"
15	SLOTTED HEX NUT	1	STD.	1/2" X 20 UNF
16	COTTER PIN	1	STD.	1/8" X 1-1/4"
17	HEX NUT	1	STD.	1-1/4" X 7 NC
18	COTTER PIN	1	STD.	1/4"
19	SPRING	1	SPG. STL.	SEE DWG. NO. 4-182-2
20	BEARING WASHER	1	STD.	" " " 4-182-2
21	WASHER	1	STD.	" " " 4-182-2
22	SPACER	1	H.R.S.	" " " 4-182-2

NEW JERSEY TURNPIKE AUTHORITY
MAINTENANCE DEPARTMENT
STANDARD SNOW PLOW DETAILS

CASTER ASSEMBLY

THIS DRAWING IS BASED UPON NEW JERSEY DEPARTMENT OF TRANSPORTATION - DIVISION OF CONSTRUCTION AND MAINTENANCE - BUREAU OF EQUIPMENT - DRAWING NO. 4-182-4 - DATED SEPTEMBER 2, 1973; LAST REVISED AUG. 9, 1977 (REV. #10)

OFFICE OF THE DIRECTOR OF MAINTENANCE
WOODBRIDGE, NEW JERSEY

DRAWING
SPP-4-182-4

PROCUREMENT NO.:

PRICE LINES:

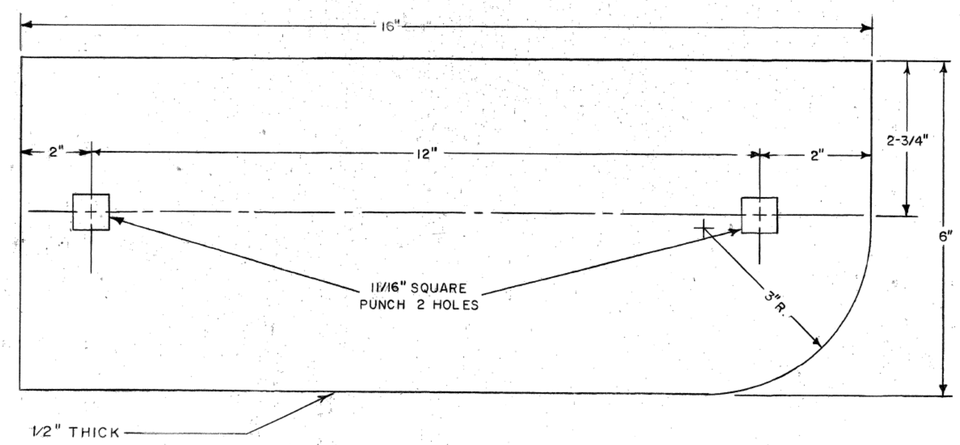

OUTER NOSE PIECE

SCALE: 3/4"=1"

MAT'L: HIGH CARBON STEEL

NOTES

1. REMOVE ALL SHARP EDGES AND BURRS.

NEW JERSEY TURNPIKE AUTHORITY
MAINTENANCE DEPARTMENT
STANDARD SNOW PLOW DETAILS

OUTER NOSE PIECE

THIS DRAWING IS BASED UPON NEW JERSEY DEPARTMENT OF TRANSPORTATION - DIVISION OF CONSTRUCTION AND MAINTENANCE - BUREAU OF EQUIPMENT - DRAWING NO. 4-183 - DATED OCTOBER 16, 1975; LAST REVISED FEB. 27, 1984 (REV. #3)

OFFICE OF THE DIRECTOR OF MAINTENANCE
WOODBRIDGE, NEW JERSEY

DRAWING
SPP-4-183

PROCUREMENT NO.:

PRICE LINES:

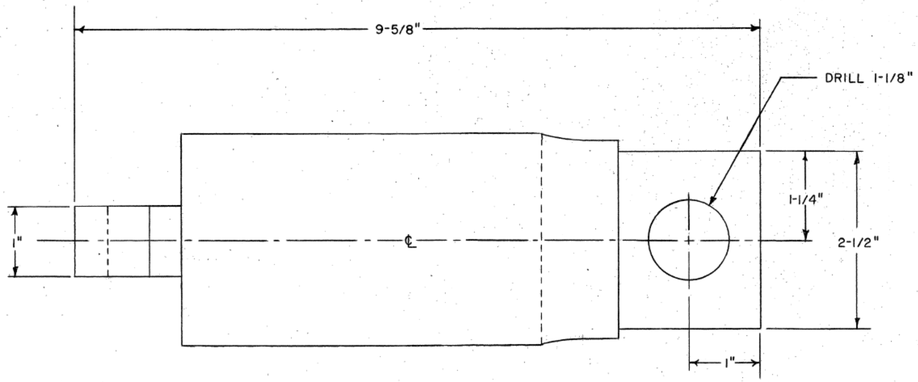

NOTES

1. REMOVE ALL SHARP EDGES AND BURRS.
2. ALL WELDS TO BE CONTINUOUS.

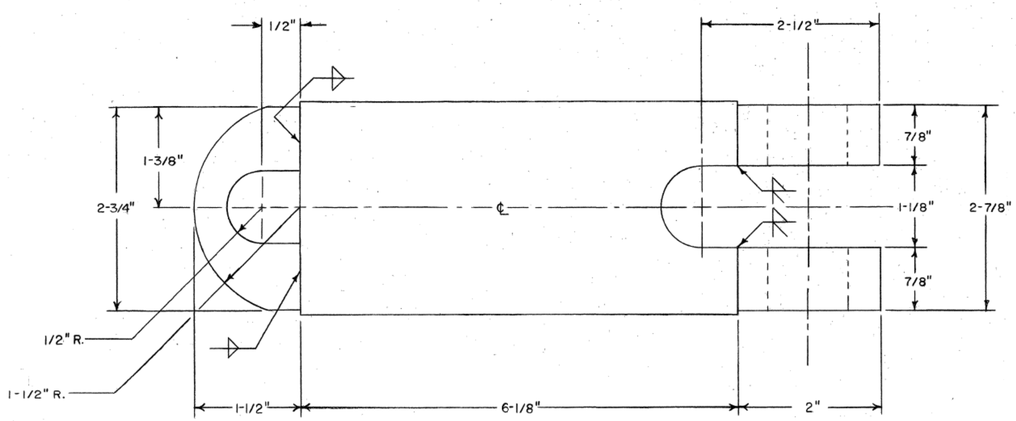

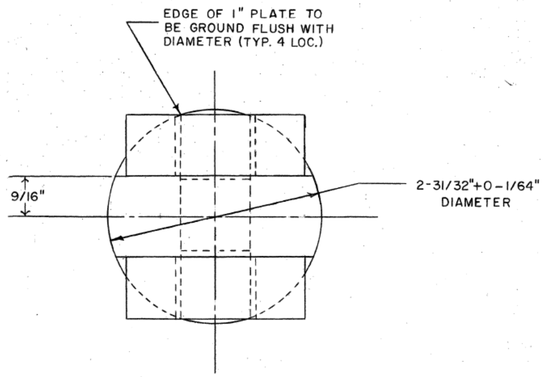

LATCH PIN SWIVEL

MATL: HOT ROLLED STEEL

NEW JERSEY TURNPIKE AUTHORITY
MAINTENANCE DEPARTMENT
STANDARD SNOW PLOW DETAILS

LATCH PIN SWIVEL

THIS DRAWING IS BASED UPON NEW JERSEY DEPARTMENT OF TRANSPORTATION - DIVISION OF CONSTRUCTION AND MAINTENANCE - BUREAU OF EQUIPMENT - DRAWING NO. 4-184 - DATED DECEMBER 11, 1975

OFFICE OF THE DIRECTOR OF MAINTENANCE
WOODBRIDGE, NEW JERSEY

DRAWING
SPP-4-184

PROCUREMENT NO.:

PRICE LINES:

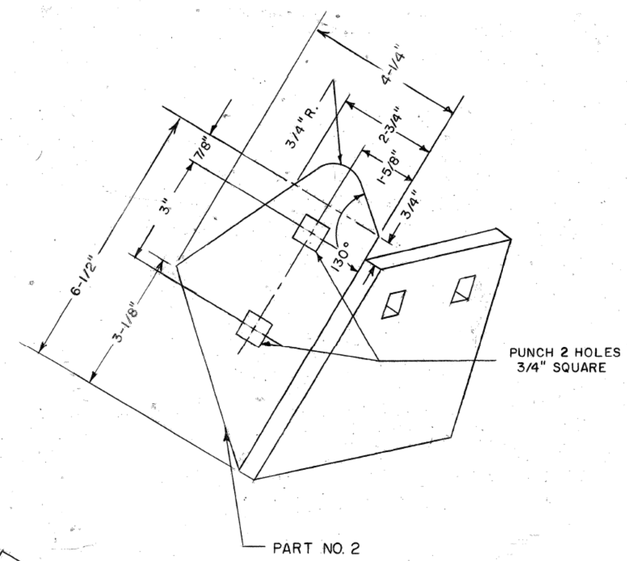

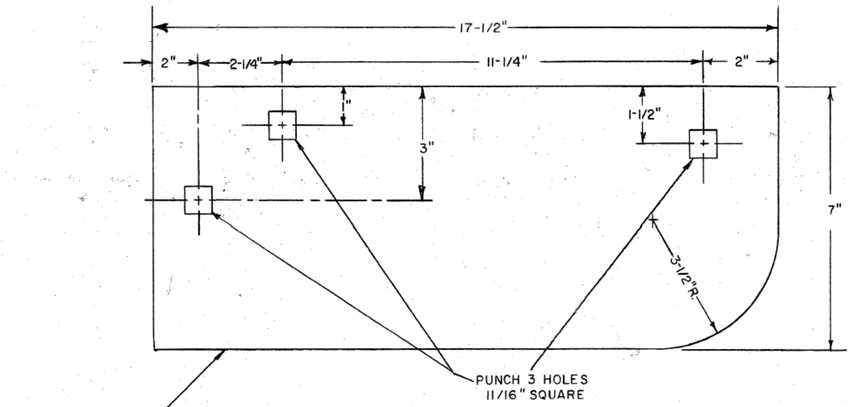

OUTER NOSE PIECE

MAT'L: HIGH CARBON STEEL

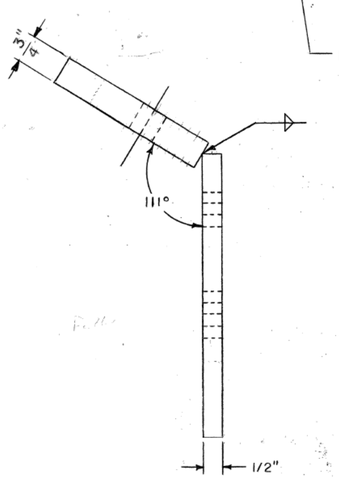

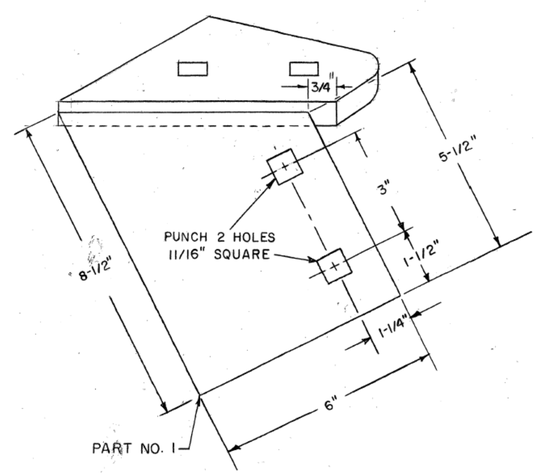

INNER NOSE PIECE

MAT'L: HIGH CARBON STEEL

NOTES

1. THIS DRAWING SUPERSEDES DWG. NO. 4-134.
2. REMOVE ALL BURRS AND SHARP EDGES.
3. ALL WELDS TO BE CONTINUOUS.
4. INNER NOSE PIECE — PLANE OF MEASURED ANGLE TO BE PERPENDICULAR TO PLANE OF PART 1 AND PART 2.
5. FASTEN INNER & OUTER NOSE PIECE TO MOLDBOARD END PLATE W/ 5/8" x 11 UNC BOLTS, ONE 2" LG., TWO 2-1/2" LG.

NEW JERSEY TURNPIKE AUTHORITY
MAINTENANCE DEPARTMENT
STANDARD SNOW PLOW DETAILS

INNER & OUTER NOSE PIECE

THIS DRAWING IS BASED UPON NEW JERSEY DEPARTMENT OF TRANSPORTATION - DIVISION OF CONSTRUCTION AND MAINTENANCE - BUREAU OF EQUIPMENT - DRAWING NO. 4-186 - DATED OCTOBER 21, 1975; LAST REVISED JULY 1, 1986 (REV. #4)

OFFICE OF THE DIRECTOR OF MAINTENANCE
WOODBRIDGE, NEW JERSEY

DRAWING
SPP-4-186

PROCUREMENT NO.:

PRICE LINES:

NOTES

1. THIS DRAWING SUPERSEDES DWG. NO. 4-126.
2. ALL VERTICAL RIBS 1/2" x 2-1/2" STRUCTURAL STEEL QUALITY PLATE.
3. MOLDBOARD SKIN TO BE 3/16" STRUCTURAL STEEL QUALITY PLATE, SMOOTH ROLLED OR BRAKE FORMED.
4. MOLDBOARD SKIN TO EXTEND TO BOTTOM EDGE OF FRONT ANGLE, SKIN EDGE - TACK WELD ONLY.
5. BLADE TO BE HIGH CARBON ABRASIVE RESISTANT STEEL.
6. FOR CARBIDE EDGE (BLADE) SEE N.J.D.O.T. BUR. OF EQUIP. DWG. NO. 4-113.
7. BLADE TO BE ATTACHED TO MOLDBOARD W/5/8" x 11 UNC x 2" CARRIAGE BOLTS, NUTS & LOCKWASHERS (N/A LAST 2 BOLTS ON EACH SIDE).
8. BOLT HOLES IN RIBS FOR ATTACHING MOLDBOARD HINGE TO BE SPACED APART 1-3/4".
9. ALL WELDS TO BE 3/16" MIN.
10. HOLES IN BOTTOM BLADE ANGLE TO BE DRILLED 5/8" DIA.
11. SNOW SHIELD TO BE ATTACHED WITH 1/2" BOLTS AND NUTS

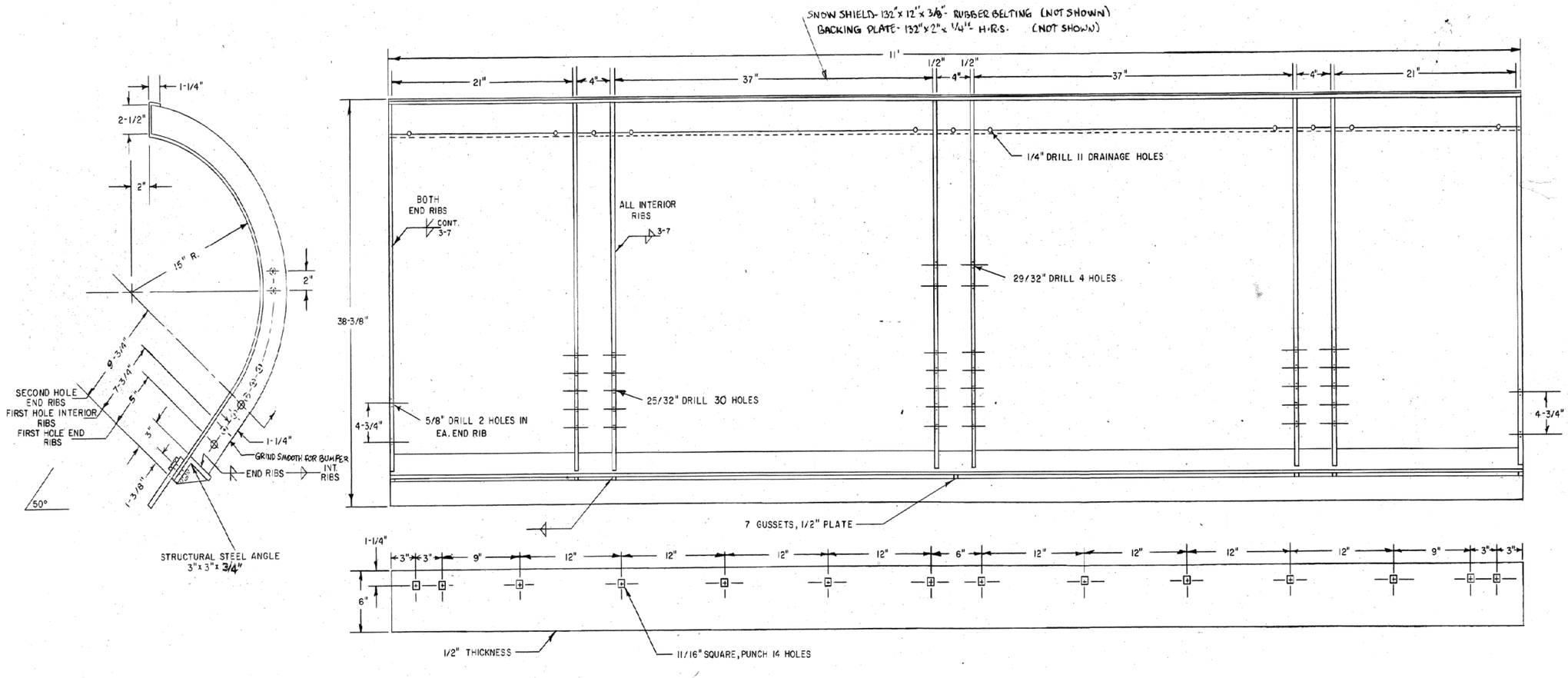

NEW JERSEY TURNPIKE AUTHORITY
MAINTENANCE DEPARTMENT
STANDARD SNOW PLOW DETAILS

SNOW PLOW
M.R. 11-36-15-1

THIS DRAWING IS BASED UPON NEW JERSEY DEPARTMENT OF TRANSPORTATION - DIVISION OF CONSTRUCTION AND MAINTENANCE - BUREAU OF EQUIPMENT - DRAWING NO. 4-188 - DATED JANUARY 6, 1976; LAST REVISED MAR. 26, 2001 (REV. #5)

OFFICE OF THE DIRECTOR OF MAINTENANCE
WOODBRIDGE, NEW JERSEY

DRAWING
SPP-4-188

PROCUREMENT NO.:

PRICE LINES:

NOTES

1. ALL SHARP EDGES AND BURRS TO BE REMOVED.
2. FASTEN CURB BUMPERS TO MOLDBOARD W/ 5/8" X 11 UNC BOLTS, NUTS AND LOCKWASHERS.
3. FASTEN WRAP AROUND TO MOLDBOARD W/ 5/8" X 11 UNC X 2-1/2" CARRIAGE BOLTS, NUTS, LOCKWASHERS.

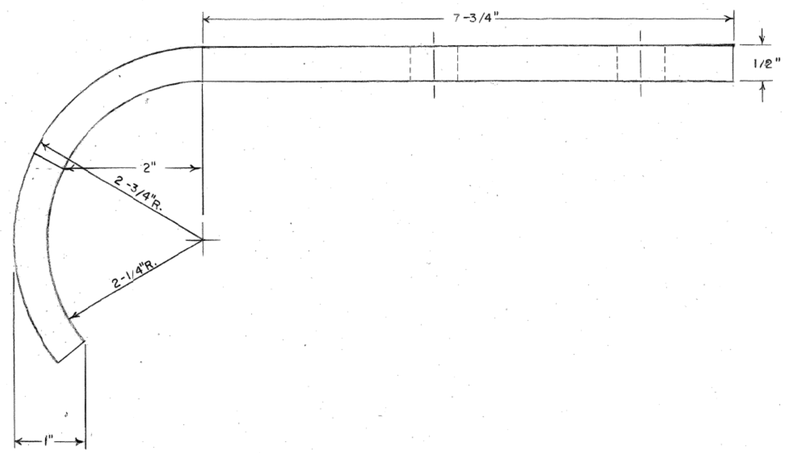

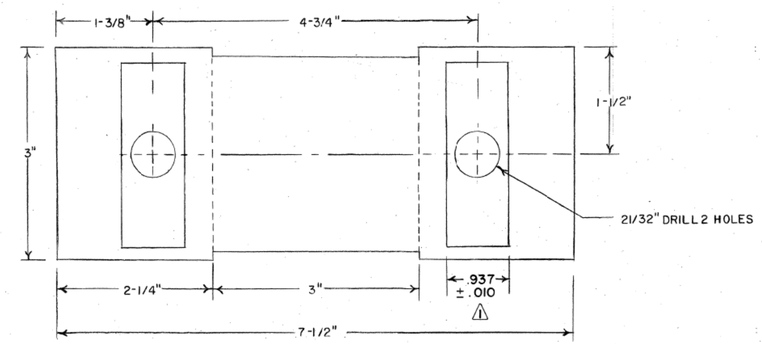

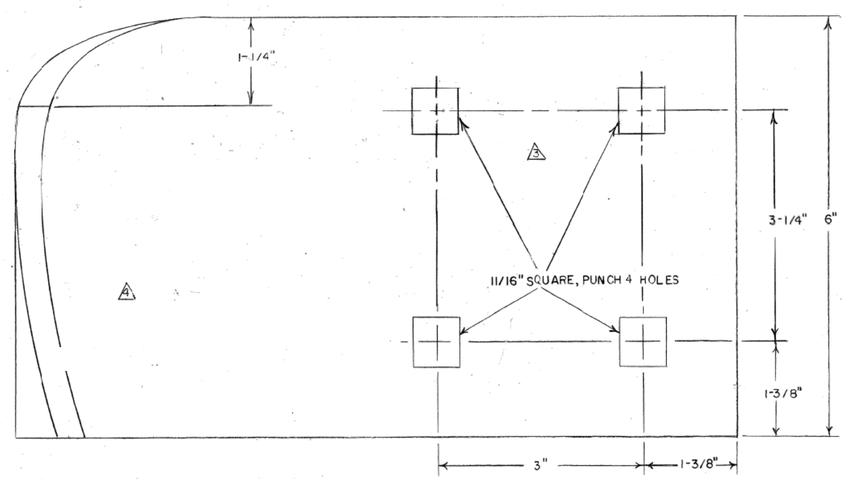

WRAP AROUND – RIGHT SIDE

MATL: HIGH CARBON STEEL

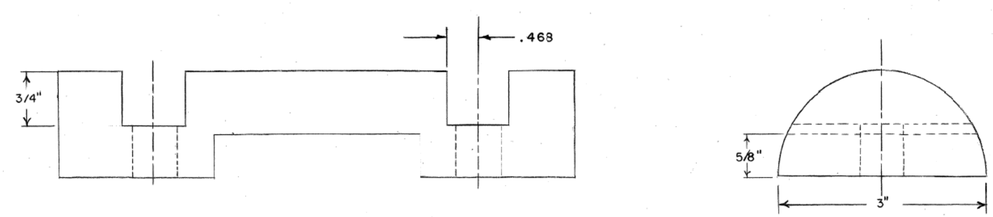

CURB BUMPER

MATL: MEDIUM CARBON STEEL

NEW JERSEY TURNPIKE AUTHORITY
MAINTENANCE DEPARTMENT
STANDARD SNOW PLOW DETAILS

WRAP AROUND - RIGHT SIDE
&
CURB BUMPER

THIS DRAWING IS BASED UPON NEW JERSEY DEPARTMENT OF TRANSPORTATION - DIVISION OF CONSTRUCTION AND MAINTENANCE - BUREAU OF EQUIPMENT - DRAWING NO. 4-191 - DATED JULY 23, 1973; LAST REVISED SEPT. 11, 1990 (REV. #4)

OFFICE OF THE DIRECTOR OF MAINTENANCE
WOODBRIDGE, NEW JERSEY

DRAWING
SPP-4-191

PROCUREMENT NO.:

PRICE LINES:

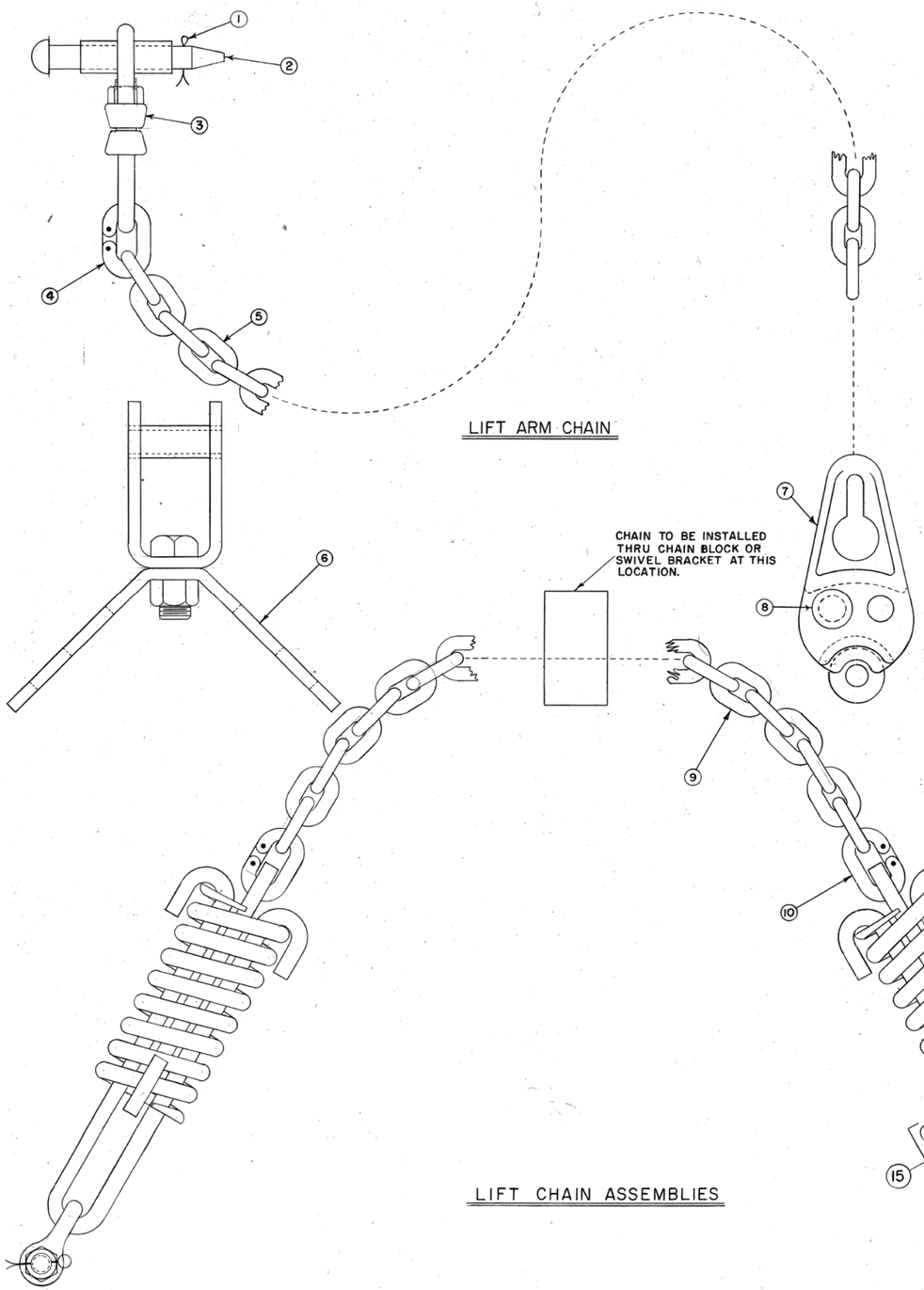

CHART NO. 1

ITEM NO.	DESCRIPTION	QTY.	MATL	SIZE
	LIFT ARM CHAIN			
1	COTTER PIN	1	STD.	1/4" x 2" LG
2	LIFT ARM CHAIN RIVET PIN	1	—	SEE DWG. NO. 4-147
3	PIPE WELDMENT	1	—	" " " 4-192-2
4	CONNECTING LINK	1	STD.	7/16"
5	3/8" HI-TEST STEEL CHAIN	1	STD.	18" LG.
	LIFT CHAIN ASSEMBLIES			
6	SWIVEL BRACKET	1	—	SEE DWG. NO. 4-192-3
7	CHAIN BLOCK	1	—	" " " 4-192-2
8	RIVET PIN	1	—	" " " 4-192-2
9	CHAIN	1	—	SEE CHART NO. 2
10	CONNECTING LINK	2	STD	7/16"
11	DROP FORGED ANCHOR TYPE SAFETY SHACKLE	2	STD	1/2" BOW SIZE
12	SPRING	2	—	SEE DWG. NO. 4-192-2
15 13	SHORT SPRING HOOK	2	—	" " " 4-192-2
14	LONG SPRING HOOK	2	—	" " " 4-192-2

CHART NO. 2

TYPE	W/SPRINGS	W/O SPRINGS	ASSY. CONSISTS OF ITEMS	LENGTH OF ITEM 9	TYPE OF CHAIN	LIFT ARM CHAIN REQ'D FOR OPERATION?
			LIFT CHAIN ASSEMBLY			
A	X		7 8 9 10 11 12 13 14	2' - 0"	3/8" HI-TEST STEEL CHAIN	YES
B	X		7 8 9 10 11 12 13 14	5' - 6"	" " " " "	YES
C		X	7 8 9 10 11	7' - 6"	" " " " "	YES
D	X		6 9 10 11 12 13 14	8' - 0"	7/16" PROOF COIL CHAIN	NO
E		X	6 9 10 11	10' - 0"	" " " "	NO
F	X		7 8 9 10 11 12 13 14	7' - 0"	3/8" HI-TEST STEEL CHAIN	YES
G		X	7 8 9 10 11	9' - 0"	" " " " "	YES

NOTES

1. SEE SPECIFICATIONS OR PURCHASE ORDER FOR TYPE OF LIFT CHAIN ASSEMBLY DESIRED. REFER TO CHART NO. 2 FOR ITEMS TO BE ASSEMBLED.
2. REFER TO CHART NO. 1 FOR DESCRIPTION AND QUANTITY OF ITEMS MENTIONED IN CHART NO. 2 FOR SPECIFIED TYPE.
3. ALL CHAIN TO BE PLATED WITH A CORROSION RESISTANT METAL.
4. ITEM NO. 10 MUST ACCOMPANY LIFT SPRING ASSEMBLY (ITEM 15) WHEN PURCHASED SEPARATELY.
5. DWG. NO.'S 4-192-1, 4-192-2, & 4-192-3 SUPERSEDES DWG. NO. 4-151.

NEW JERSEY TURNPIKE AUTHORITY
MAINTENANCE DEPARTMENT
STANDARD SNOW PLOW DETAILS

SNOW PLOW LIFTING CHAINS

THIS DRAWING IS BASED UPON NEW JERSEY DEPARTMENT OF TRANSPORTATION - DIVISION OF CONSTRUCTION AND MAINTENANCE - BUREAU OF EQUIPMENT - DRAWING NO. 4-192-1 - DATED APRIL 13, 1977

OFFICE OF THE DIRECTOR OF MAINTENANCE
WOODBRIDGE, NEW JERSEY

DRAWING
SPP-4-192-1

PROCUREMENT NO.:

PRICE LINES:

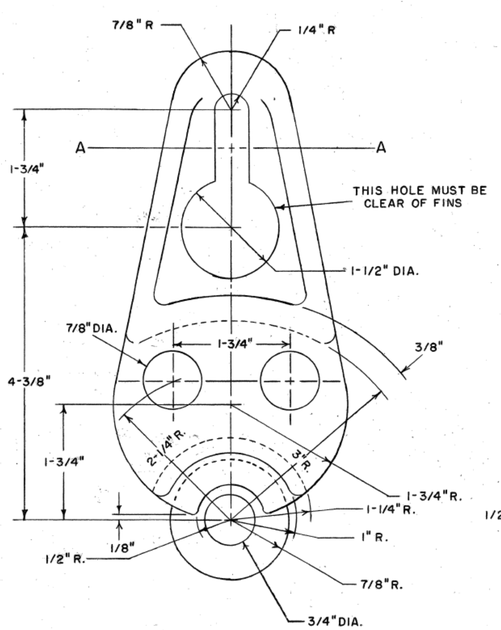

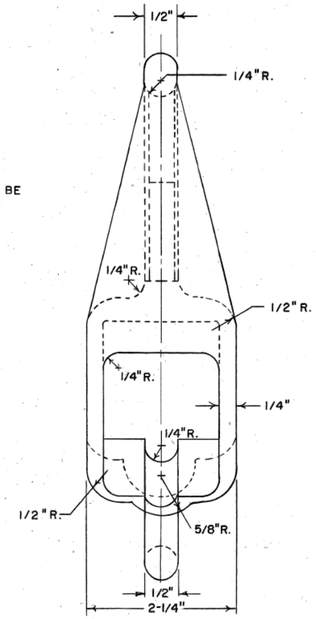

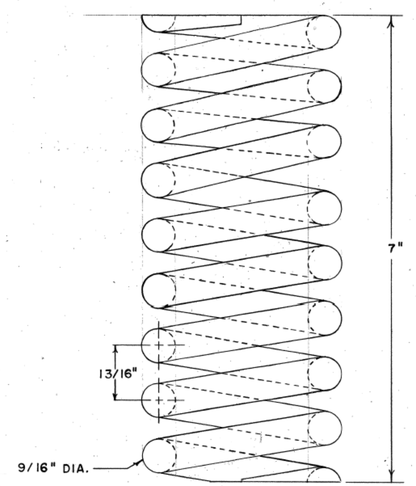

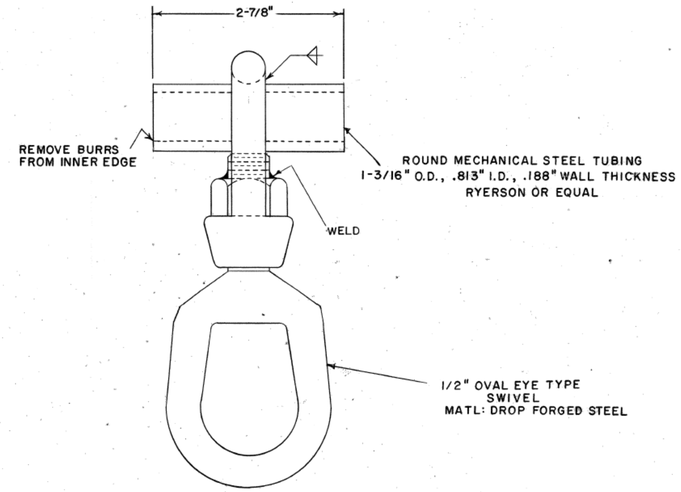

PIPE WELDMENT

SCALE: NONE

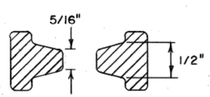

SECTION A-A

CHAIN BLOCK

MATL: CAST STEEL
SCALE: FULL SIZE

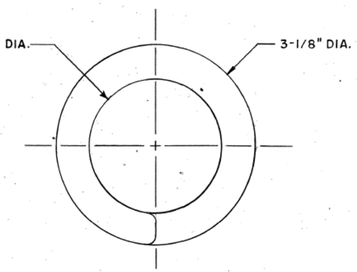

SPRING

MATL: SPRING STEEL
SCALE: FULL SIZE

NOTES

1. REMOVE ALL BURRS.
2. CONSULT AGENCY FOR CHAIN BLOCK SAMPLE IF FULL MATERIAL COMPOSITION AND/OR TYPE MANUFACTURING PROCESS IS DESIRED FOR STRENGTH PURPOSES.
3. SPRING HOOKS ARE TO BE FLAME CUT FROM 1/2" PLATE STEEL.

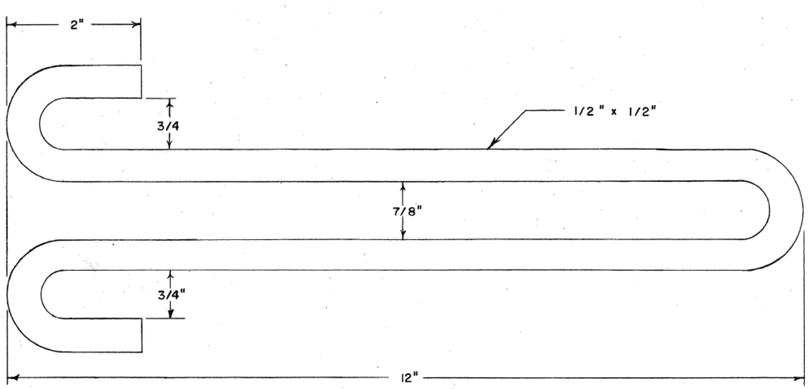

LONG SPRING HOOK

MATL: SAE 1030 STEEL
SCALE: FULL SIZE

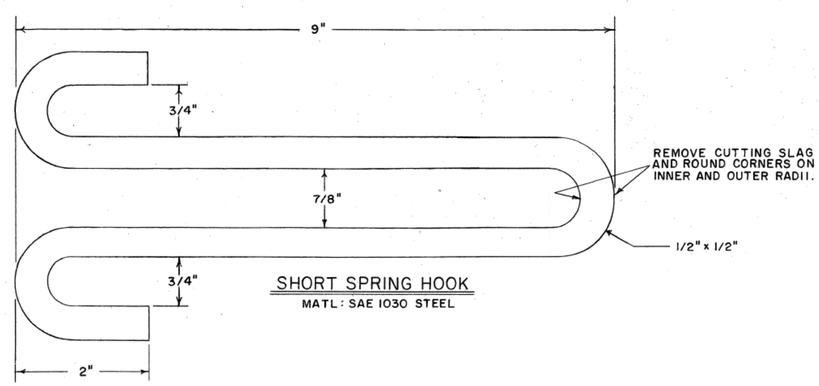

SHORT SPRING HOOK

MATL: SAE 1030 STEEL

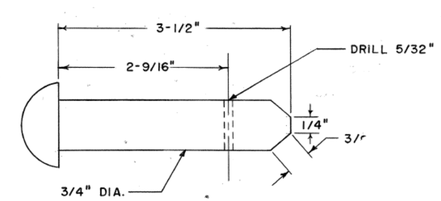

RIVET PIN

MATL: STEEL

NEW JERSEY TURNPIKE AUTHORITY
MAINTENANCE DEPARTMENT
STANDARD SNOW PLOW DETAILS

SNOW PLOW LIFTING CHAINS

THIS DRAWING IS BASED UPON NEW JERSEY DEPARTMENT OF TRANSPORTATION - DIVISION OF CONSTRUCTION AND MAINTENANCE - BUREAU OF EQUIPMENT - DRAWING NO. 4-192-2 - DATED APRIL 13, 1977; LAST REVISED DEC. 28, 1982 (REV. #2)

OFFICE OF THE DIRECTOR OF MAINTENANCE
WOODBRIDGE, NEW JERSEY

DRAWING
SPP-4-192-2

PROCUREMENT NO.:

PRICE LINES:

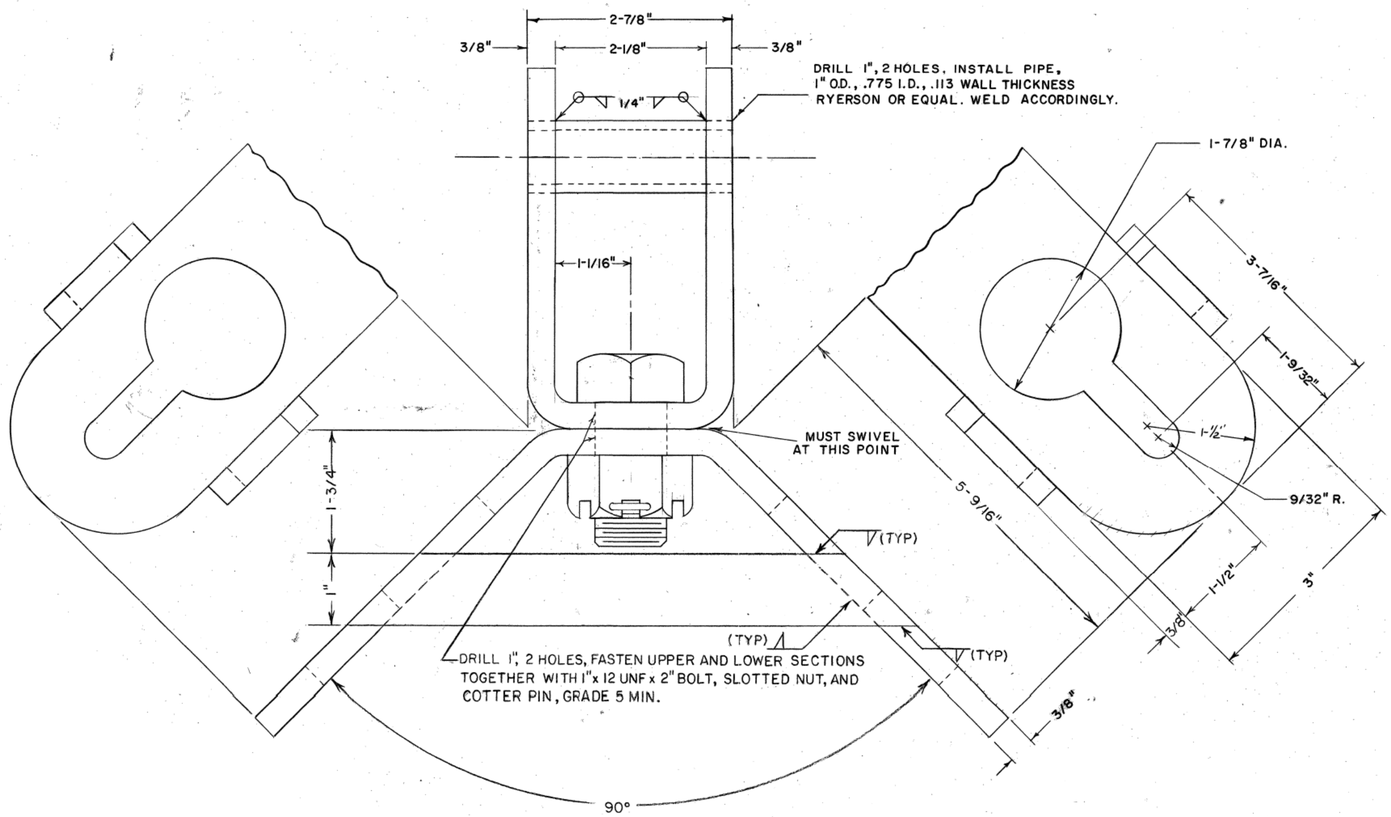

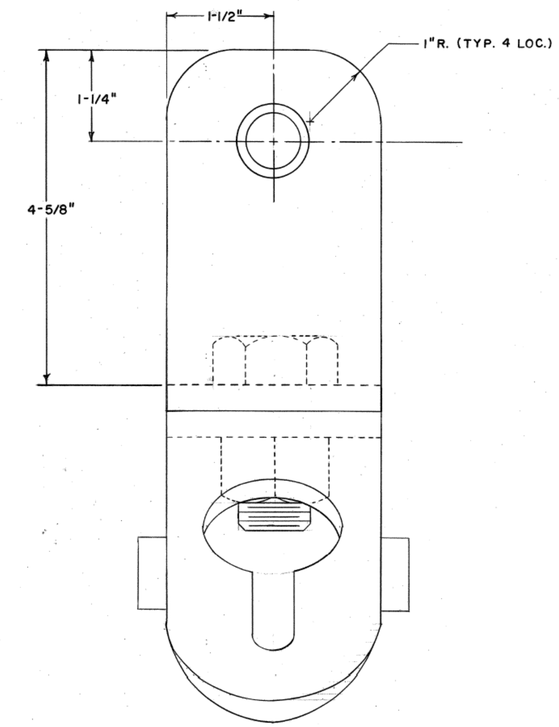

SWIVEL BRACKET

MAT'L: MEDIUM CARBON STEEL

NEW JERSEY TURNPIKE AUTHORITY
MAINTENANCE DEPARTMENT
STANDARD SNOW PLOW DETAILS

SNOW PLOW LIFTING CHAINS

THIS DRAWING IS BASED UPON NEW JERSEY DEPARTMENT OF TRANSPORTATION - DIVISION OF CONSTRUCTION AND MAINTENANCE - BUREAU OF EQUIPMENT - DRAWING NO. 4-192-3 - DATED APRIL 13, 1977; LAST REVISED SEPT., 1984 (REV. #1)

OFFICE OF THE DIRECTOR OF MAINTENANCE
WOODBRIDGE, NEW JERSEY

DRAWING
SPP-4-192-3

PROCUREMENT NO.:

PRICE LINES:

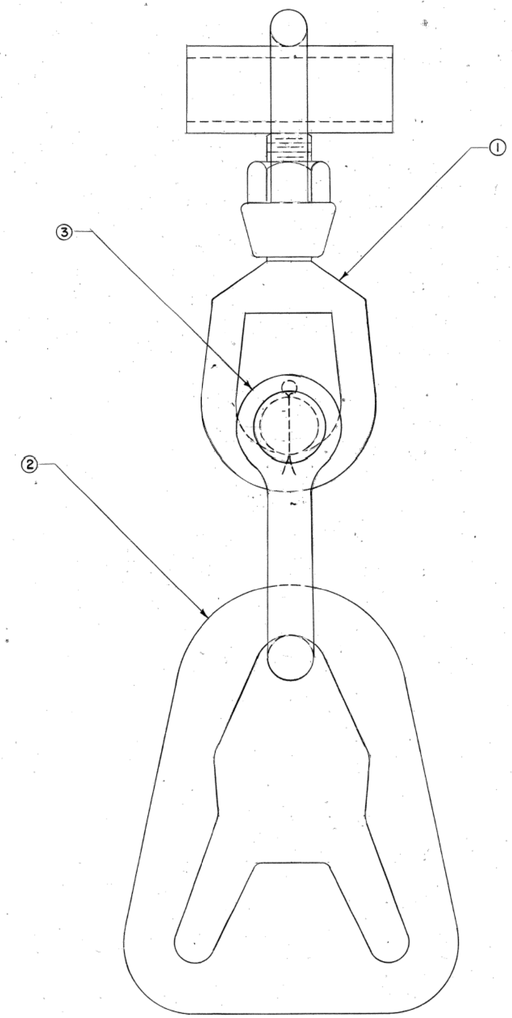

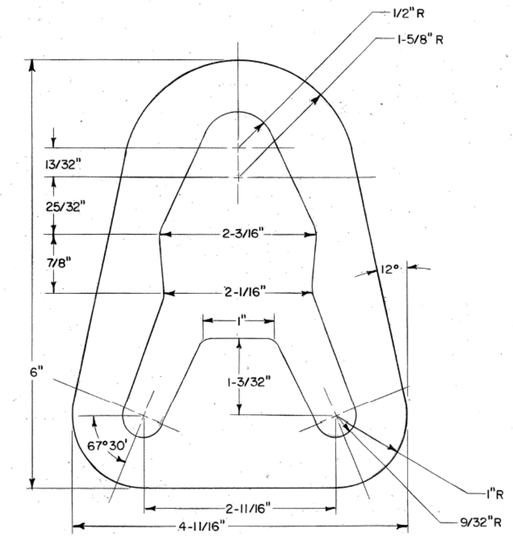

PEAR SHAPED CONNECTOR
MAT'L: 1/2" HOT ROLLED STRUCTURAL STEEL

SNOW PLOW LIFTING CHAINS CONNECTOR ASSEMBLY

ITEM NO.	DESCRIPTION	QTY	MAT'L	SIZE
1	PIPE WELDMENT	1	—	SEE DWG. NO. 4-192-2
2	PEAR SHAPED CONNECTOR	1	—	SEE DWG. ABOVE
3	ANCHOR SHACKLE W/ LOOSE PIN	1	STD	5/8" SHACKLE W/ 3/4" PIN

NEW JERSEY TURNPIKE AUTHORITY
MAINTENANCE DEPARTMENT
STANDARD SNOW PLOW DETAILS

SNOW PLOW LIFTING CHAINS CONNECTOR ASSY.

THIS DRAWING IS BASED UPON NEW JERSEY DEPARTMENT OF TRANSPORTATION - DIVISION OF CONSTRUCTION AND MAINTENANCE - BUREAU OF EQUIPMENT - DRAWING NO. 4-192-4 - DATED OCTOBER 19, 1982

OFFICE OF THE DIRECTOR OF MAINTENANCE
WOODBRIDGE, NEW JERSEY

DRAWING
SPP-4-192-4

PROCUREMENT NO.:

PRICE LINES:

HEAVY DUTY TRUCK HITCH ASSEMBLY

ITEM NO	DESCRIPTION	QTY	MATL	SIZE
1	PUSH & LIFT ASSEMBLY	1	—	SEE DWG. NO. 4-196-2
2	ADJUSTABLE EXTENSION	1	—	SEE DWG. NO. 4-196-3
3	AXLE CLAMP	1	—	SEE DWG. NO. 4-196-4
4	YOKE ASSEMBLY	1	—	SEE DWG. NO. 4-196-3
5	BUMPER ANGLE	1	—	SEE DWG NO 4-208 △2
6	LIFT ARM ASSEMBLY	1	—	SEE DWG. NO. 4-196-6
7a	DOUBLE ACTING CYLINDER	1	—	SEE DWG. NO. 4-140
7b	SINGLE ACTING CYLINDER	1	—	SEE DWG. NO. 4-149
8	ANGLE BOLT - A	2	—	SEE DWG. NO. 4-196-7
9	PIN-A	1	—	SEE DWG. NO. 4-196-7
10	BUTTON HEAD RIVET PIN - C	2	—	SEE DWG. NO. 4-196-7
11	PIN - B	1	—	SEE DWG. NO. 4-196-7
12	BUTTON HEAD RIVET PIN-G	2	—	SEE DWG. NO. 4-196-7
13	BUTTON HEAD RIVET PIN-E	2	—	SEE DWG. NO. 4-196-7
14	BOLT, HEX NUT & LOCKING WASHER	6	STD	3/4"-10UNC X 1-3/4"
15	SERRATED LOCKING BLOCK	2	—	SEE DWG NO. 4-196-7
16	CLAMP PIN- A	1	—	SEE DWG NO. 4-196-7
17	FLAT WASHER (FOR TOP OF ANGLE BOLT ONLY)	2	STD	3/4" STD
18	ELASTIC TOP LOCKING HEX NUT	4	STD	3/4"-10UNC
19	BUTTON HEAD RIVET PIN-F	1	—	SEE DWG NO. 4-196-7
20	COTTER PIN	1	STD	1/4"X3"
21	HAIR PIN	2	STD	5" x .243" DIA.
22	COTTER PIN	3	STD	3/16"X2"
23	COTTER PIN	1	STD	1/4"X1-1/2"
24	COTTER PIN	2	STD	3/16"X1-1/2"
25	COTTER PIN	3	STD	1/4"X1-3/4"

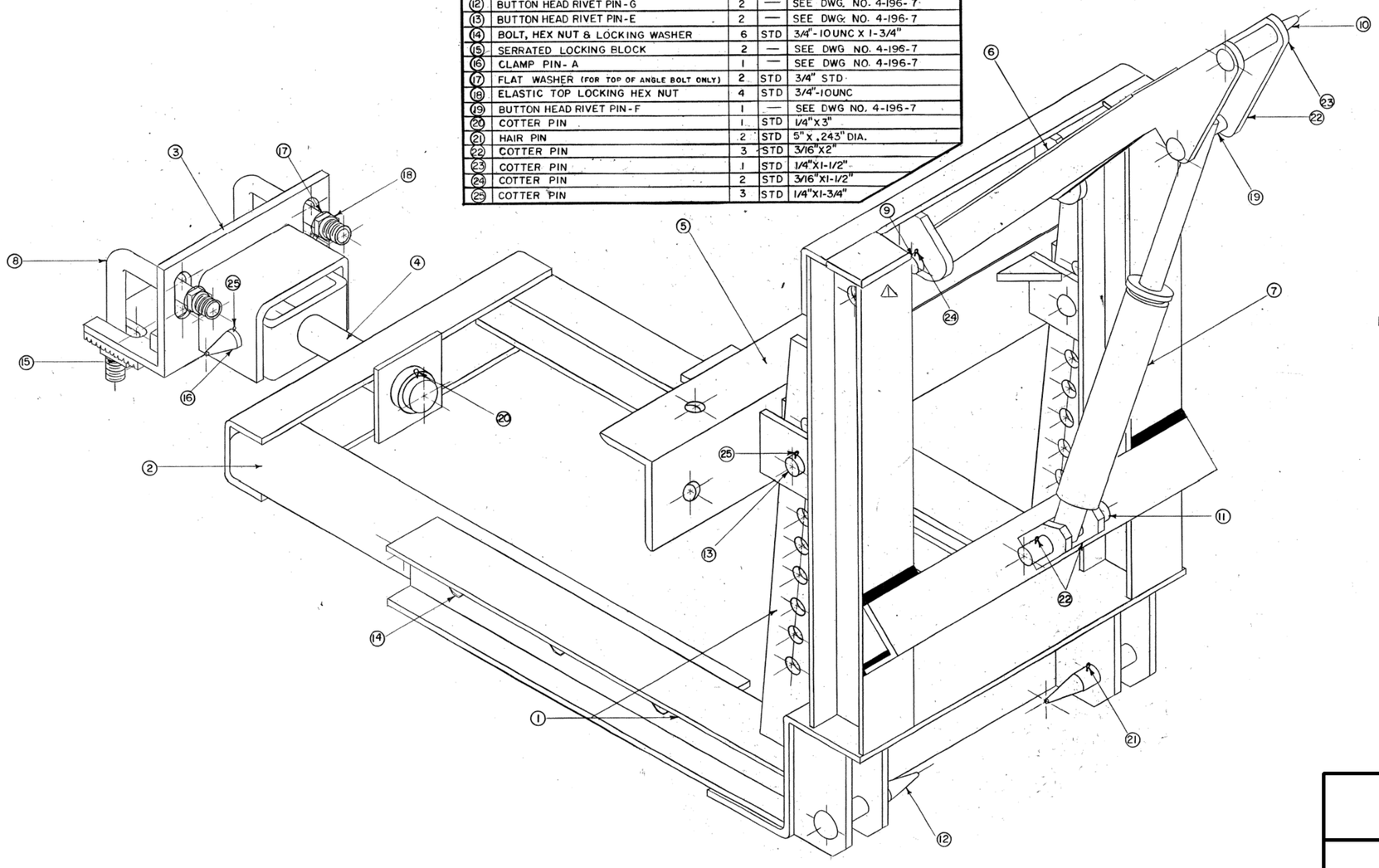

NOTES:
1. SEE DWG 4-196-5 FOR BUMPER ANGLE HOLE LOCATION AND MOUNTING.
2. ALL BOLTS AND NUTS (ASSEMBLY AND MOUNTING) TO BE GRADE 5 MINIMUM.

NEW JERSEY TURNPIKE AUTHORITY
MAINTENANCE DEPARTMENT
STANDARD SNOW PLOW DETAILS

HEAVY DUTY TRUCK HITCH ASSEMBLY

THIS DRAWING IS BASED UPON NEW JERSEY DEPARTMENT OF TRANSPORTATION - DIVISION OF CONSTRUCTION AND MAINTENANCE - BUREAU OF EQUIPMENT - DRAWING NO. 4-196-1 - DATED SEPTEMBER 20, 1982; LAST REVISED SEPT., 1995 (REV. #2)

OFFICE OF THE DIRECTOR OF MAINTENANCE
WOODBRIDGE, NEW JERSEY

DRAWING
SPP-4-196-1

PROCUREMENT NO.:

PRICE LINES:

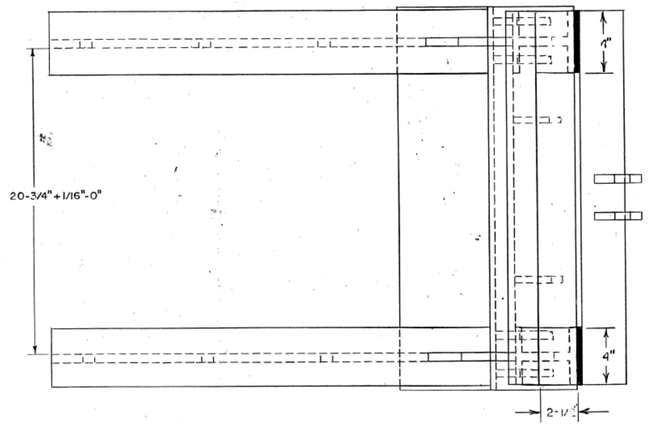

MAT'L:

WIDE FLANGE —— STRUCTURAL STEEL
PLATE —— HOT ROLLED STRUCTURAL STEEL QUALITY

NOTES:

1. COMPLETE ASSEMBLY TO BE WELDED TOGETHER

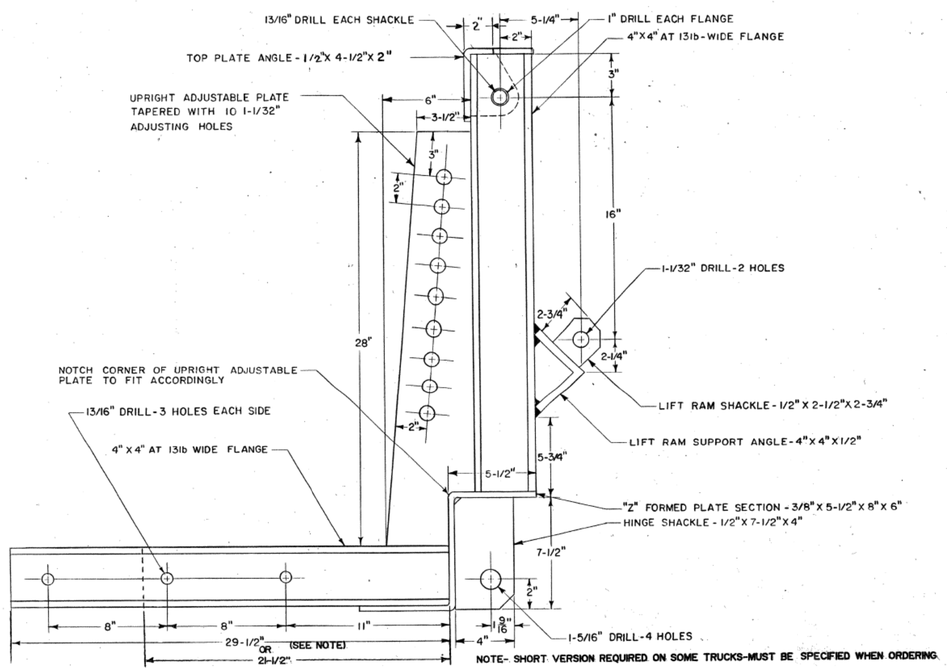

NOTE- SHORT VERSION REQUIRED ON SOME TRUCKS-MUST BE SPECIFIED WHEN ORDERING.

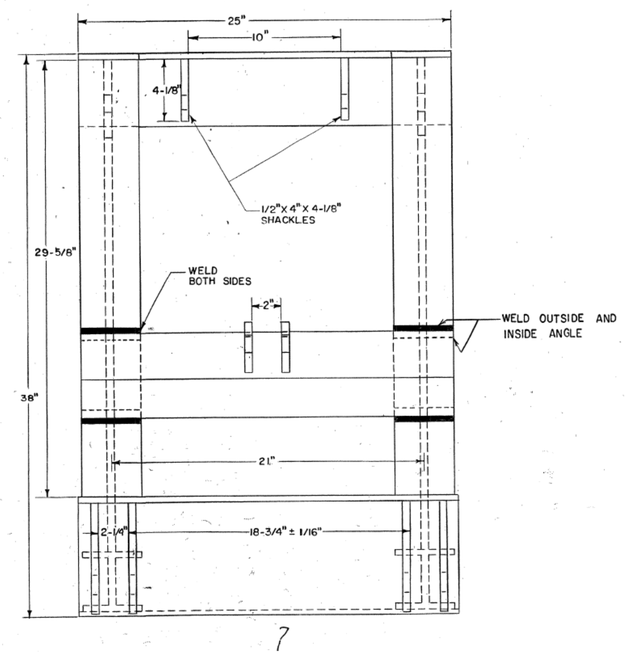

7

NEW JERSEY TURNPIKE AUTHORITY
MAINTENANCE DEPARTMENT
STANDARD SNOW PLOW DETAILS

PUSH AND LIFT ASSEMBLY

THIS DRAWING IS BASED UPON NEW JERSEY DEPARTMENT OF TRANSPORTATION - DIVISION OF CONSTRUCTION AND MAINTENANCE - BUREAU OF EQUIPMENT - DRAWING NO. 4-196-2 - DATED SEPTEMBER 27, 1982;

OFFICE OF THE DIRECTOR OF MAINTENANCE
WOODBRIDGE, NEW JERSEY

DRAWING
SPP-4-196-2

PROCUREMENT NO.:

PRICE LINES:

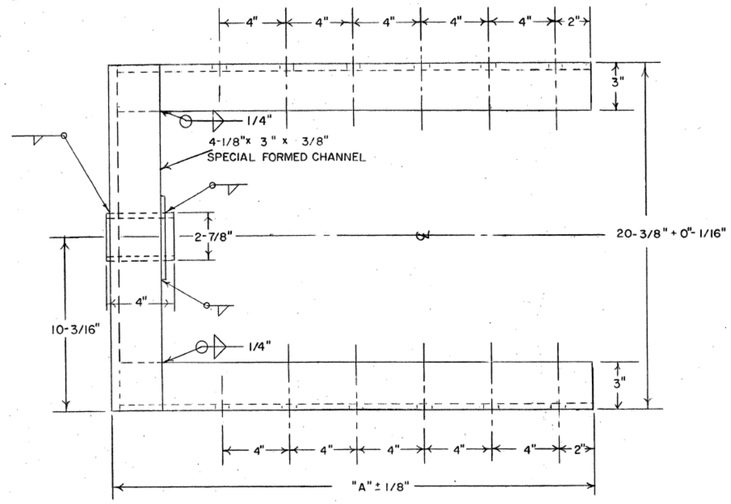

GROUP NO.	A
1	28-1/2
2	38-1/2
3	52-1/2
4	20-1/2

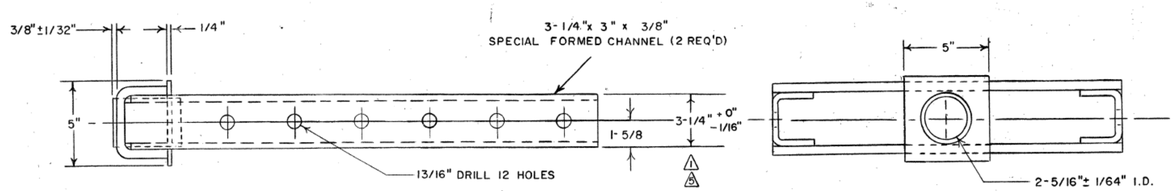

ADJUSTABLE EXTENSION

SCALE 1/4"=1"

MAT'L:

TUBING ____ COLD DRAWN SEAMLESS CARBON STEEL
1/4" PLATE _ STRUCTURAL STEEL QUALITY
CHANNEL __ GENERAL PURPOSE STEEL

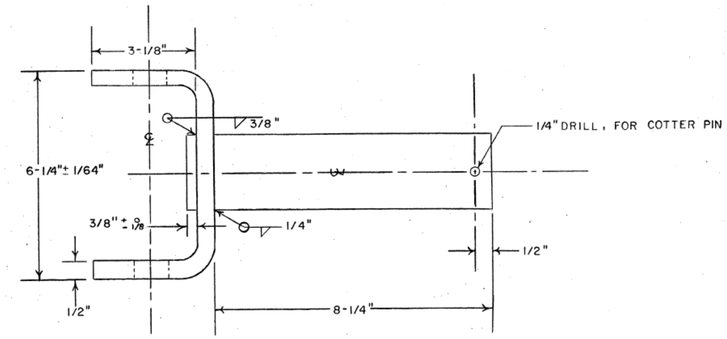

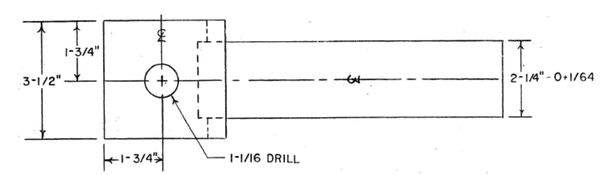

YOKE ASSEMBLY

FOR ADJUSTABLE HITCH

SCALE: 1/2"=1"

MAT'L:

ROUND STOCK ____ COLD FINISHED CARBON STEEL
1/2" PLATE _____ GENERAL PURPOSE STEEL PLATE

NOTES

1 MATERIAL TO BE AS SPECIFIED.
2 ADJUSTABLE EXTENSION AND YOKE ASSEMBLY TO BE PIECED TOGETHER WITH CONTINUOUS WELDS.
3 LENGTH OF ADJUSTABLE EXTENSION WILL BE STATED IN SPECIFICATIONS.
4 YOKE ASSEMBLY MUST SLIDE FREELY IN SLEEVE OF ADJUSTABLE EXTENSION.
5 DO NOT SCALE DRAWING.

NEW JERSEY TURNPIKE AUTHORITY
MAINTENANCE DEPARTMENT
STANDARD SNOW PLOW DETAILS

ADJUSTABLE EXTENSION AND YOKE ASSEMBLY

THIS DRAWING IS BASED UPON NEW JERSEY DEPARTMENT OF TRANSPORTATION - DIVISION OF CONSTRUCTION AND MAINTENANCE - BUREAU OF EQUIPMENT - DRAWING NO. 4-196-3 - DATED APRIL 9, 1974; LAST REVISED SEPT. 1992 REV. #8

OFFICE OF THE DIRECTOR OF MAINTENANCE
WOODBRIDGE, NEW JERSEY

DRAWING
SPP-4-196-3

PROCUREMENT NO.:

PRICE LINES:

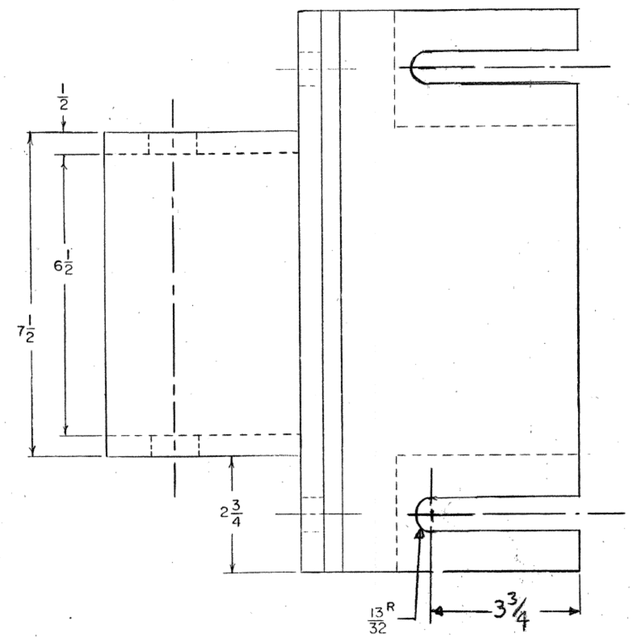

MAT'L :
PLATE _____ GENERAL PURPOSE STEEL PLATE

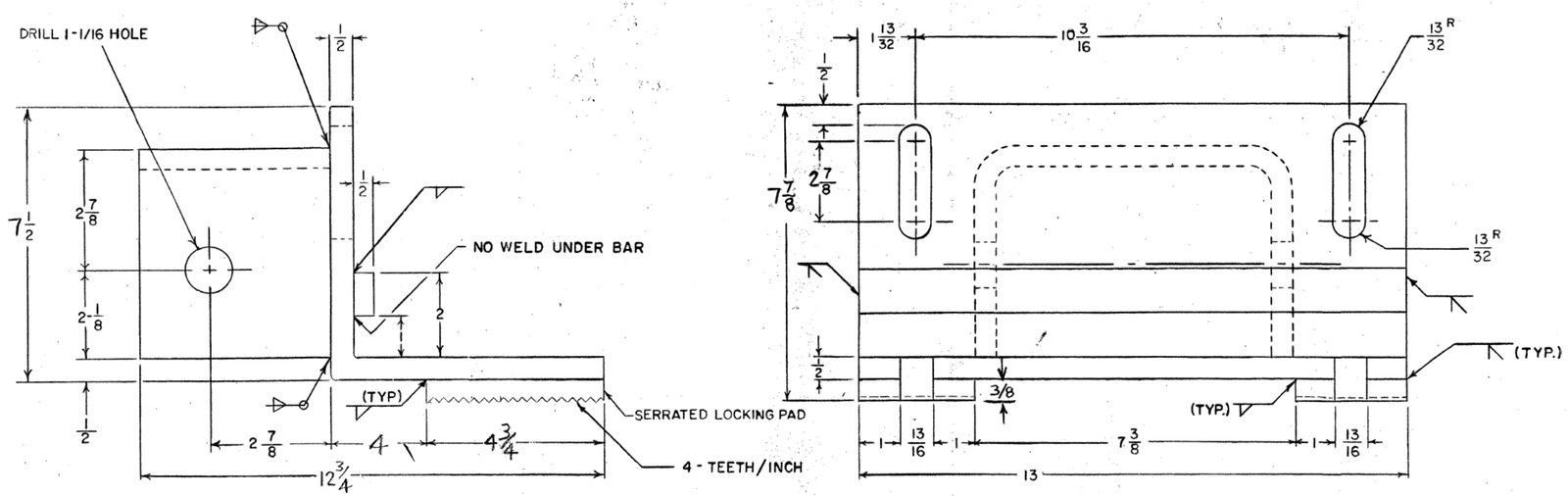

NEW JERSEY TURNPIKE AUTHORITY
MAINTENANCE DEPARTMENT
STANDARD SNOW PLOW DETAILS

AXLE CLAMP

THIS DRAWING IS BASED UPON NEW JERSEY DEPARTMENT OF TRANSPORTATION - DIVISION OF CONSTRUCTION AND MAINTENANCE - BUREAU OF EQUIPMENT - DRAWING NO. 4-196-4 - DATED DEC 6, 1973 - LAST REVISED OCT. 21, 1996

OFFICE OF THE DIRECTOR OF MAINTENANCE
WOODBRIDGE, NEW JERSEY

DRAWING
SPP-4-196-4

PROCUREMENT NO.:

PRICE LINES:

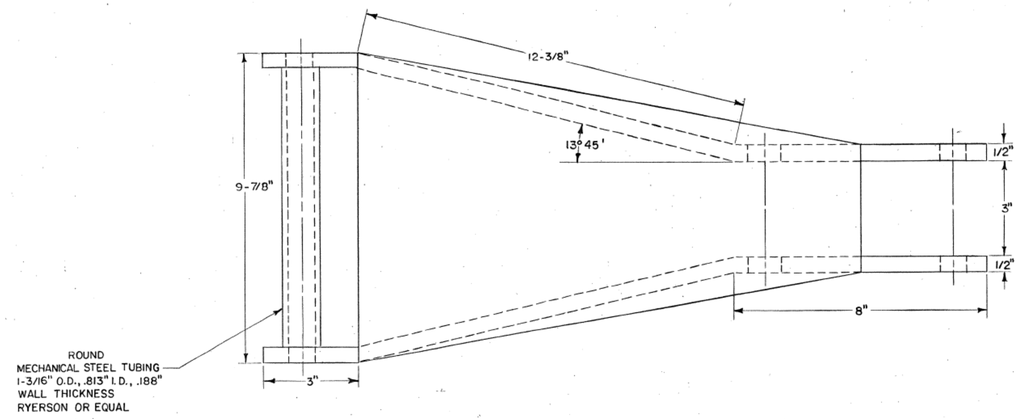

MAT'L:
PLATE ——— HOT ROLLED STRUCTURAL STEEL

NOTES:
1. COMPLETE ASSEMBLY TO BE WELDED TOGETHER

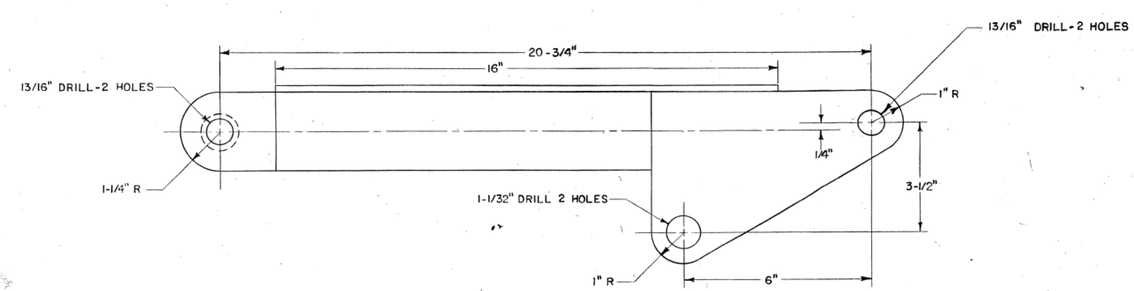

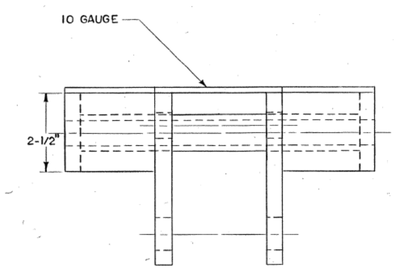

NEW JERSEY TURNPIKE AUTHORITY
MAINTENANCE DEPARTMENT
STANDARD SNOW PLOW DETAILS

LIFT ARM ASSEMBLY

THIS DRAWING IS BASED UPON NEW JERSEY DEPARTMENT OF TRANSPORTATION - DIVISION OF CONSTRUCTION AND MAINTENANCE - BUREAU OF EQUIPMENT - DRAWING NO. 4-196-6 - DATED SEPTEMBER 30, 1982;

OFFICE OF THE DIRECTOR OF MAINTENANCE
WOODBRIDGE, NEW JERSEY

DRAWING
SPP-4-196-6

PROCUREMENT NO.:

PRICE LINES:

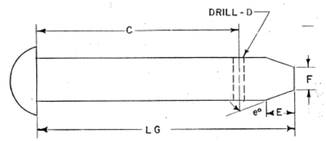

BUTTON HEAD RIVET PIN
MAT'L: LOW CARBON STEEL

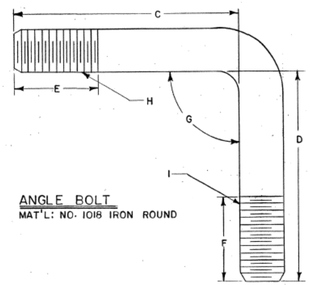

ANGLE BOLT
MAT'L: NO. 1018 IRON ROUND

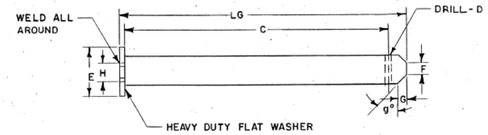

CLAMP PIN
MAT'L: NO. 1020 IRON ROUND

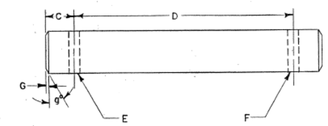

PIN
MAT'L: A-C NO. 1020 IRON ROUND
D NO. 1045 IRON ROUND

BUTTON HEAD RIVET PIN	DIA.	LENGTH	DIM. C	DIM. D	CHAMFER E X 60°	DIM. F	REMARKS
A	3/4"	3-1/2"	2-9/16"	5/32"	19/64" X 50°	1/4"	
B	1/2"	2-1/2"	2-1/16"	5/32"	3/64" X 20°	1/4"	
C	3/4"	5-1/2"	4-5/16"	1/4"	15/16" X 75°	1/4"	
D	1"	3"	2-1/2"	17/64"	7/32" X 60°	3/4"	
E	1"	4"	3-1/2"	17/64"	7/32" X 60°	3/4"	
F	1"	5"	4-5/8"	13/64"	9/64" X 50°	3/4"	
G	1-1/4"	7"	4-3/16"	17/64"	2-1/8" X 80°	1/2"	

ANGLE BOLT	DIA.	L G.	DIM. C	DIM. D	DIM. E	DIM. F	DIM. G	DIM. H	DIM. I	REMARKS
A	3/4"	18-3/4	9"	9"	4-1/2"	4-1/2"	90°	3/4-10 UNC	3/4-10 UNC	
B	3/4"	15-3/4	7-1/2"	7-1/2"	5"	5"	90°	3/4-10 UNC	3/4-10 UNC	

CLAMP PIN	DIA.	LENGTH	DIM. C	DIM. D	DIM. E	DIM. F	CH G X 9°	DIM. H	REMARKS
A	1"	9"	8"	17/64"	1-1/2"	3/8"	29/64" X 55°	5/8"	
B	1"	10"	9-3/8"	1/4"	1-1/2"	7/8"	3/32" X 55°	5/8"	

PIN	DIA	LENGTH	DIM C	DIM D	DIM E	DIM F	CHAMFER G X 9°	REMARKS
A	3/4"	12"	5/16"	11-3/8"	13/64"	13/64	1/16" X 60°	
B	1"	4-1/4"	3/8"	3-1/2"	13/64"	13/64"	1/16" X 60°	
C	3/4"	23"	1"	22"	17/64"	NO HOLE	1/16" X 60°	
D	1-1/4"	6"	5/8"	4-3/4"	1/2"	1/2"	1/16 X 60°	

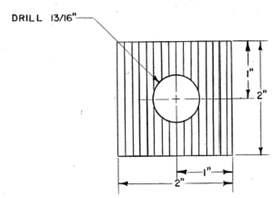

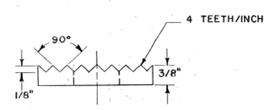

SERRATED LOCKING BLOCK
MAT'L: HOT ROLLED STEEL

NEW JERSEY TURNPIKE AUTHORITY
MAINTENANCE DEPARTMENT
STANDARD SNOW PLOW DETAILS

MISC. TRUCK HITCH ELEMENTS

THIS DRAWING IS BASED UPON NEW JERSEY DEPARTMENT OF TRANSPORTATION - DIVISION OF CONSTRUCTION AND MAINTENANCE - BUREAU OF EQUIPMENT - DRAWING NO. 4-196-7 - DATED OCTOBER 4, 1982

OFFICE OF THE DIRECTOR OF MAINTENANCE
WOODBRIDGE, NEW JERSEY

DRAWING
SPP-4-196-7

PROCUREMENT NO.:

PRICE LINES:

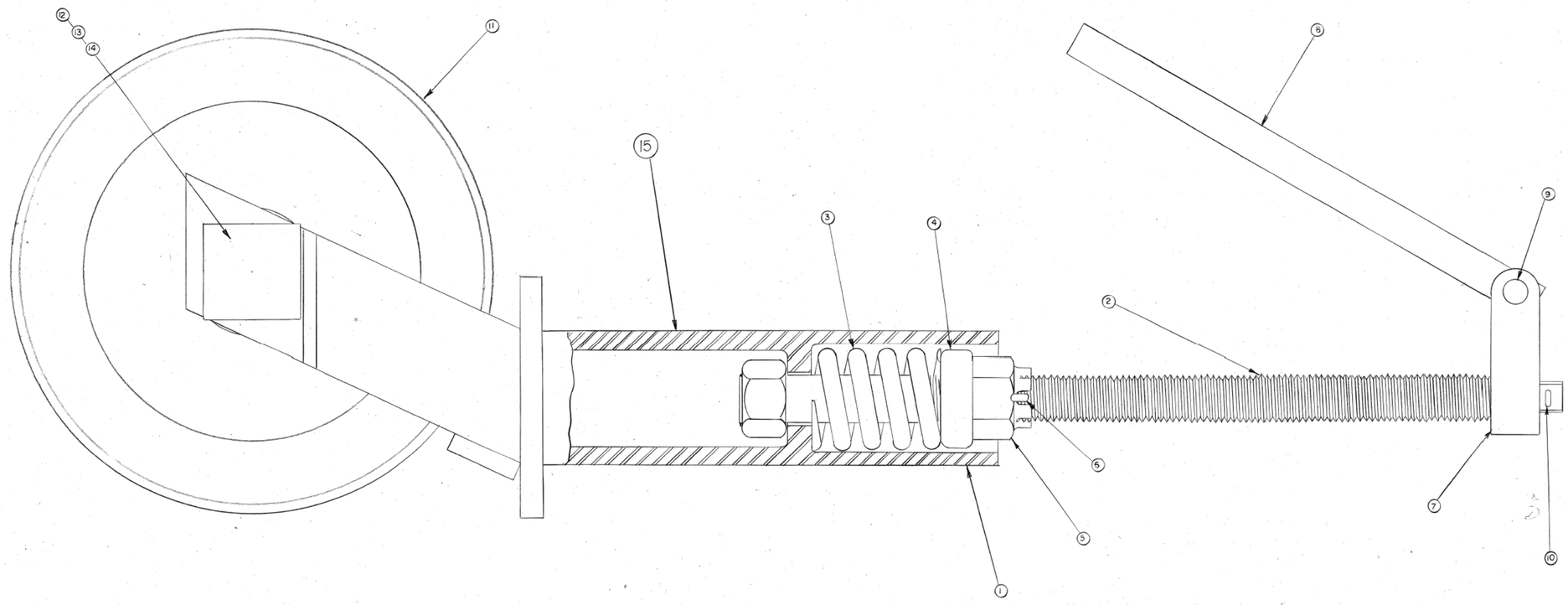

ITEM NO.	NAME	QTY	MAT'L	SIZE
1	CASTER STEM	1		SEE DWG. NO. 4-197-3
2	ADJUSTING BOLT	1	H.R.S.	" " " 4-197-2
3	SPRING	1	SPR. STL.	" " " 4-197-2
4	BEARING	1	——	" " " 4-197-2
5	CASTLE HEX NUT	1	STD.	1" X 8 UNC
6	COTTER PIN	1	STD.	3/16" X 1-1/2"
7	FORK	1	C.R.STL.	SEE DWG. NO. 4-197-2
8	HANDLE	1	H.R.STL.	" " " 4-197-2
9	RIVET	1	STD.	3/8" X 1-5/8"
10	COTTER PIN	1	STD.	1/4" X 1-1/4"
11	WHEEL W/BEARING	1	——	SEE DWG NO. 4-198
12	AXLE	1	——	SEE DWG NO. 4-121
13	SLOTTED HEX NUT	1	STD.	1-1/8" X 12 UNF
14	COTTER PIN	1	STD.	1/4" X 2-1/2"
15	COMPLETE CASTER ASSEMBLY			

NEW JERSEY TURNPIKE AUTHORITY
MAINTENANCE DEPARTMENT
STANDARD SNOW PLOW DETAILS

CASTER ASSEMBLY (FABRICATION)

THIS DRAWING IS BASED UPON NEW JERSEY DEPARTMENT OF TRANSPORTATION - DIVISION OF CONSTRUCTION AND MAINTENANCE - BUREAU OF EQUIPMENT - DRAWING NO. 4-197-1 - DATED JUNE 19, 1983 - LAST REVISED JUNE 19, 1983

OFFICE OF THE DIRECTOR OF MAINTENANCE
WOODBRIDGE, NEW JERSEY

DRAWING
SPP-4-197-1

PROCUREMENT NO.:

PRICE LINES:

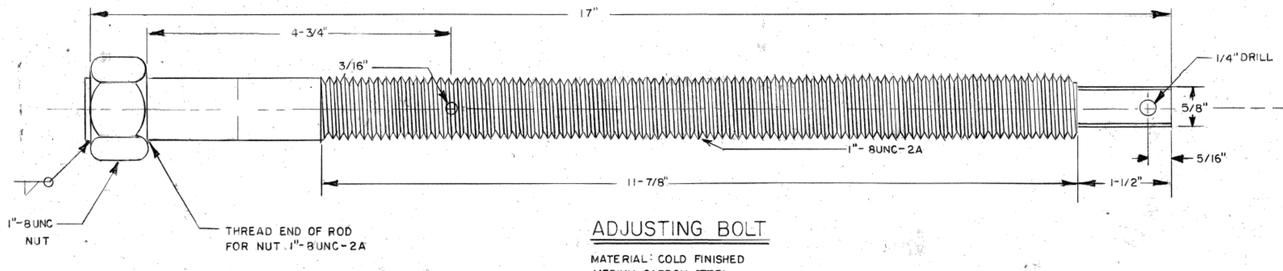

ADJUSTING BOLT

MATERIAL: COLD FINISHED
MEDIUM CARBON STEEL
HEAT TREATED

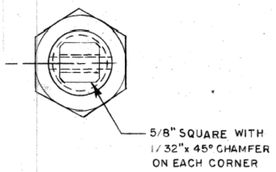

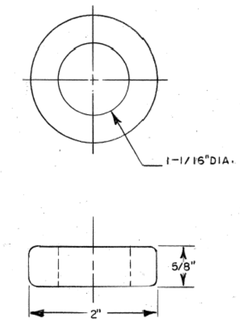

BEARING

MATERIAL: COLD FINISHED
MEDIUM CARBON STEEL

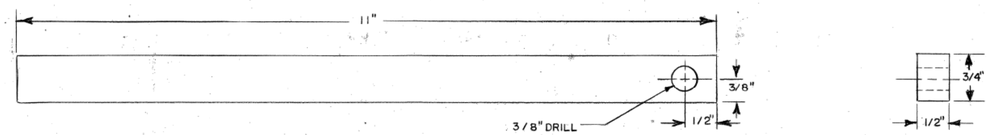

HANDLE

MATERIAL: HOT ROLLED STEEL

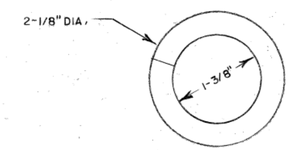

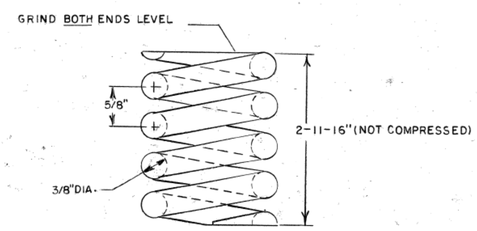

SPRING

MATERIAL: SPRING STEEL

NOTES

1. ALL FILLETS AND ROUNDS UNLESS OTHERWISE SPECIFIED TO BE 1/8" R.

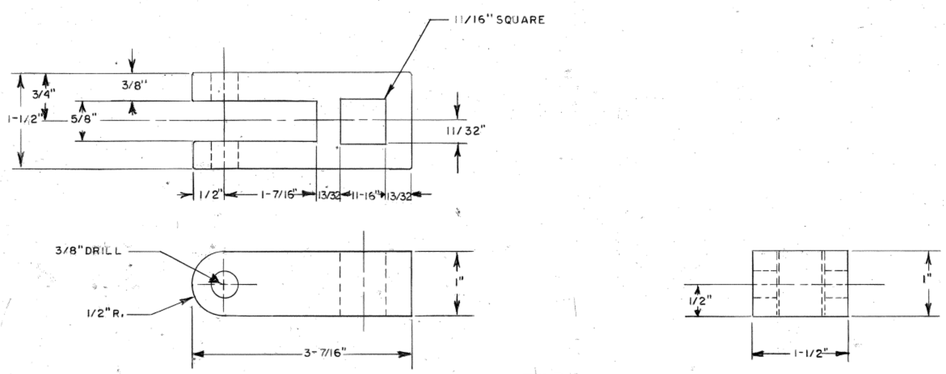

FORK

MATERIAL: COLD FINISHED
MEDIUM CARBON STEEL

NEW JERSEY TURNPIKE AUTHORITY
MAINTENANCE DEPARTMENT
STANDARD SNOW PLOW DETAILS

CASTER ASSEMBLY (FABRICATION)

THIS DRAWING IS BASED UPON NEW JERSEY DEPARTMENT OF TRANSPORTATION - DIVISION OF CONSTRUCTION AND MAINTENANCE - BUREAU OF EQUIPMENT - DRAWING NO. 4-197-2 - DATED JUNE 16, 1983 - LAST REVISED JUNE 16, 1983

OFFICE OF THE DIRECTOR OF MAINTENANCE
WOODBRIDGE, NEW JERSEY

DRAWING
SPP-4-197-2

PROCUREMENT NO.:

PRICE LINES:

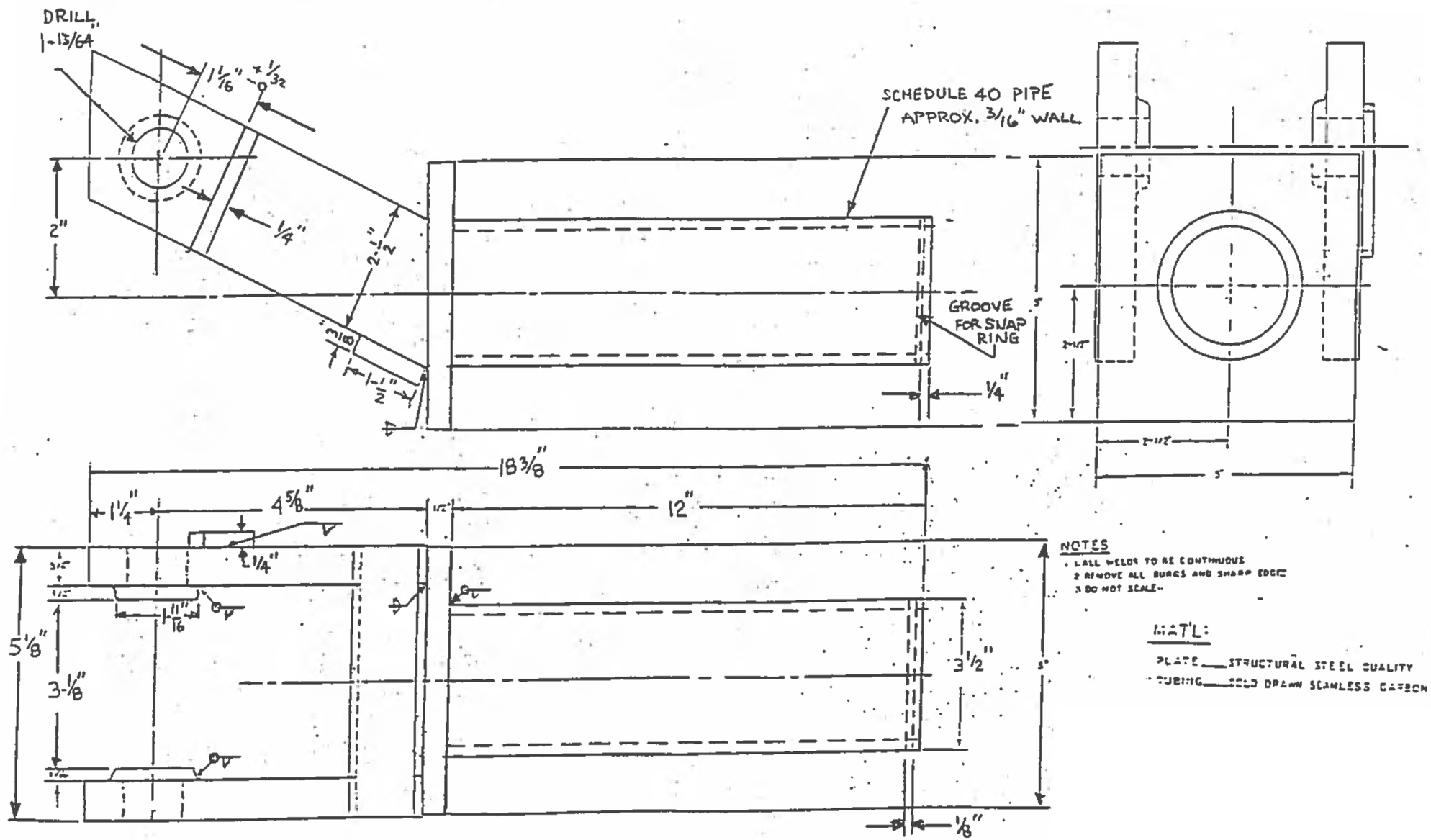

NOTES

1. ALL WELDS TO BE CONTINUOUS
2. REMOVE ALL BURRS AND SHARP EDGES
3. DO NOT SCALE.

MAT'L:

PLATE ___ STRUCTURAL STEEL QUALITY
TUBING ___ COLD DRAWN SEAMLESS CARBON STEEL

NEW JERSEY TURNPIKE AUTHORITY
MAINTENANCE DEPARTMENT
STANDARD SNOW PLOW DETAILS

CASTER ASSEMBLY (FABRICATION)

THIS DRAWING IS BASED UPON NEW JERSEY DEPARTMENT OF TRANSPORTATION - DIVISION OF CONSTRUCTION AND MAINTENANCE - BUREAU OF EQUIPMENT - DRAWING NO. 4-197-3

OFFICE OF THE DIRECTOR OF MAINTENANCE
WOODBRIDGE, NEW JERSEY

DRAWING
SPP-4-197-3

PROCUREMENT NO.:

PRICE LINES:

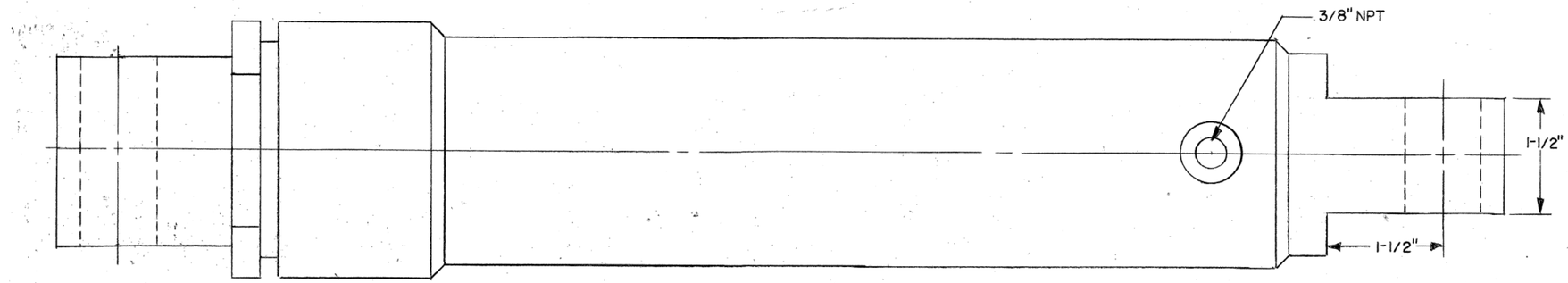

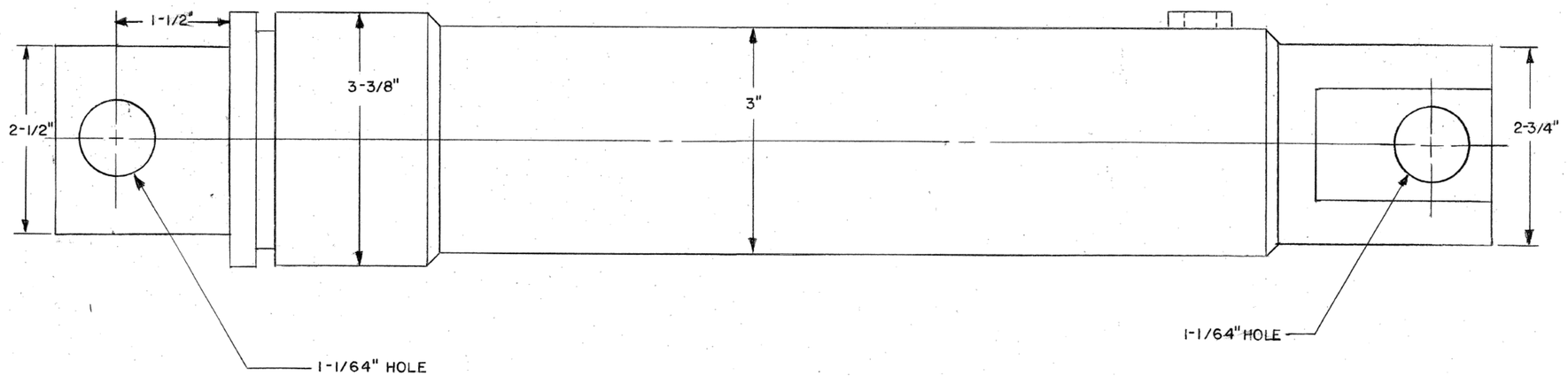

NOTE:

1. CYLINDER TO PROVIDE 10" STROKE
2. ROD TO BE CHROME PLATED
3. MONARCH CS-250 W/MODIFICATIONS SHOWN

NEW JERSEY TURNPIKE AUTHORITY
MAINTENANCE DEPARTMENT
STANDARD SNOW PLOW DETAILS

SINGLE-ACTING RAM-2½ ROD & 10" STROKE

THIS DRAWING IS BASED UPON NEW JERSEY DEPARTMENT OF TRANSPORTATION - DIVISION OF CONSTRUCTION AND MAINTENANCE - BUREAU OF EQUIPMENT - DRAWING NO. 4-202 - DATED OCTOBER 12, 1984: LAST REVISED OCT. 12, 1984

OFFICE OF THE DIRECTOR OF MAINTENANCE
WOODBRIDGE, NEW JERSEY

DRAWING
SPP-4-202

PROCUREMENT NO.:

PRICE LINES:

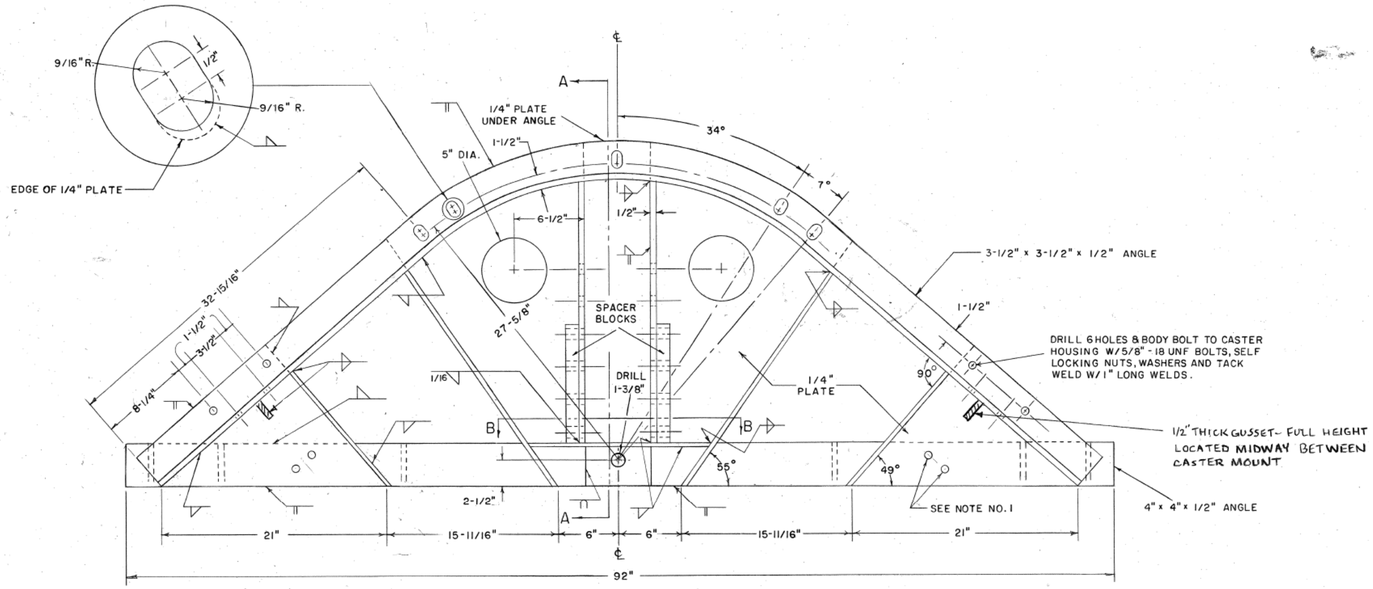

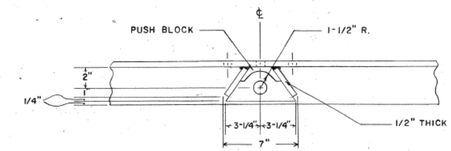

BOTTOM VIEW

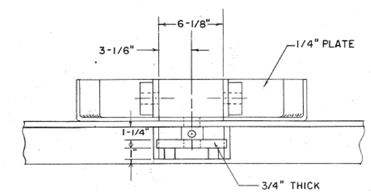

SECTION B - B

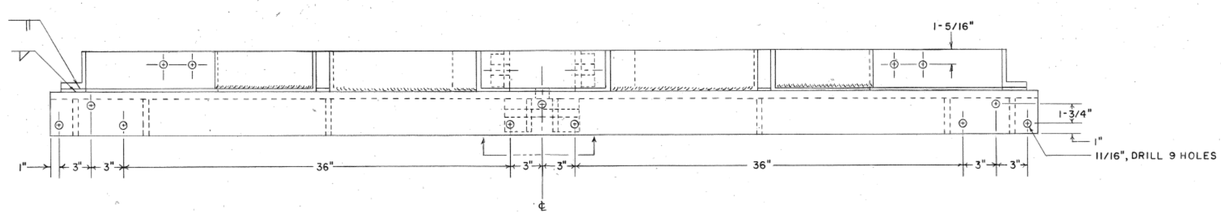

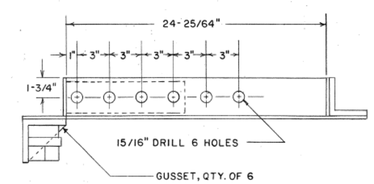

NOTES:

1. HOLES TO BE DRILLED WHEREVER CASTER HOUSING BRACKET MAY FALL.
2. CONNECT EYE BAR OF PUSH BAR TO SEMICIRCLE WITH 1-1/4"-12 UNF x 5" LG. BOLT, SLOTTED NUT AND COTTER PIN.
3. ALL 1/4" AND 1/2" PLATE TO BE STRUCTURAL STEEL QUALITY, CUT AND SHAPED TO SIZE AND WELDED TO FRAME.
4. BOLTS AND NUTS TO BE MINIMUM GRADE 5 CORROSION RESISTANT.
5. SPACER BLOCKS TO BE 3"x1-1/4"x11" STRUCTURAL STEEL QUALITY W/HOLES CENTERED LENGTHWISE. BLOCKS NOT TO BE WELDED TO FRAME, USE ONLY ON O-R. 12.75-(32,53)-(14.75,22.75)-1 MODEL.
6. EYE BAR MUST BE CAPABLE OF ANGLING AT LEAST 82° WHEN ATTACHED TO PUSH BLOCK SECTION.
7. GUSSETS TO BE WELDED INTO PLACE W/FILLET WELDS.

NEW JERSEY TURNPIKE AUTHORITY
MAINTENANCE DEPARTMENT
STANDARD SNOW PLOW DETAILS

LARGE SEMICIRCLE

THIS DRAWING IS BASED UPON NEW JERSEY DEPARTMENT OF TRANSPORTATION - DIVISION OF CONSTRUCTION AND MAINTENANCE - BUREAU OF EQUIPMENT - DRAWING NO. 4-203 - DATED MARCH 6, 1985: LAST REVISED SEPT. 4, 1995

OFFICE OF THE DIRECTOR OF MAINTENANCE
WOODBRIDGE, NEW JERSEY

DRAWING
SPP-4-203

PROCUREMENT NO.:

PRICE LINES:

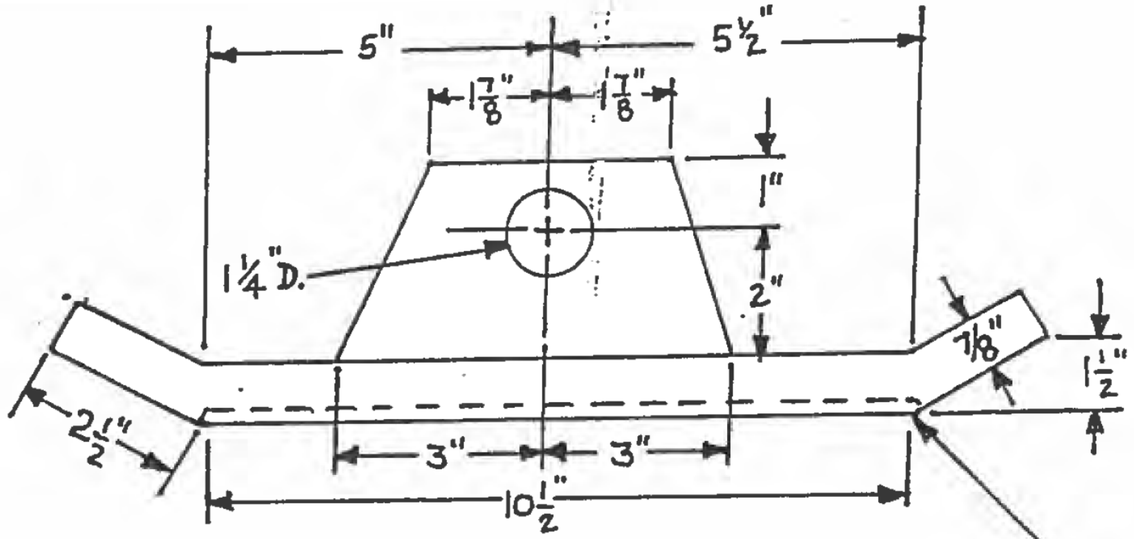

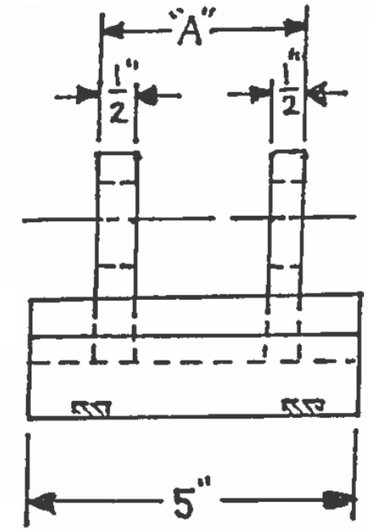

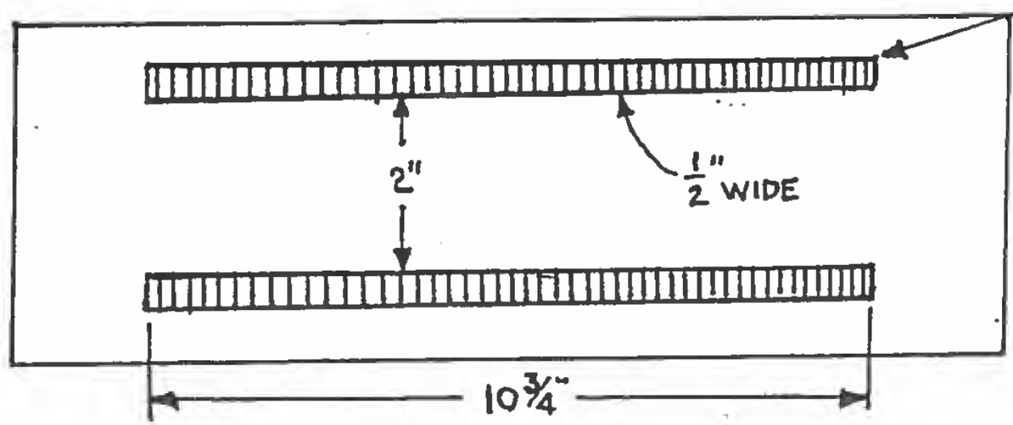

NOTE: TUNGSTEN CARBIDE TO BE ⅜" THICK, RECESSED INTO BOTTOM OF SHOE–NO EXPOSED EDGES

DIM. "A"	2½	2¾	3	3¼	3½

SEE SPECS IN CONTRACT FOR CARBIDE INSERTS.

NEW JERSEY TURNPIKE AUTHORITY
MAINTENANCE DEPARTMENT
STANDARD SNOW PLOW DETAILS

SNOW PLOW SHOE

THIS DRAWING IS BASED UPON NEW JERSEY DEPARTMENT OF TRANSPORTATION - DIVISION OF CONSTRUCTION AND MAINTENANCE - BUREAU OF EQUIPMENT - DRAWING NO. 4-204

OFFICE OF THE DIRECTOR OF MAINTENANCE
WOODBRIDGE, NEW JERSEY

DRAWING
SPP-4-204

PROCUREMENT NO.:

PRICE LINES:

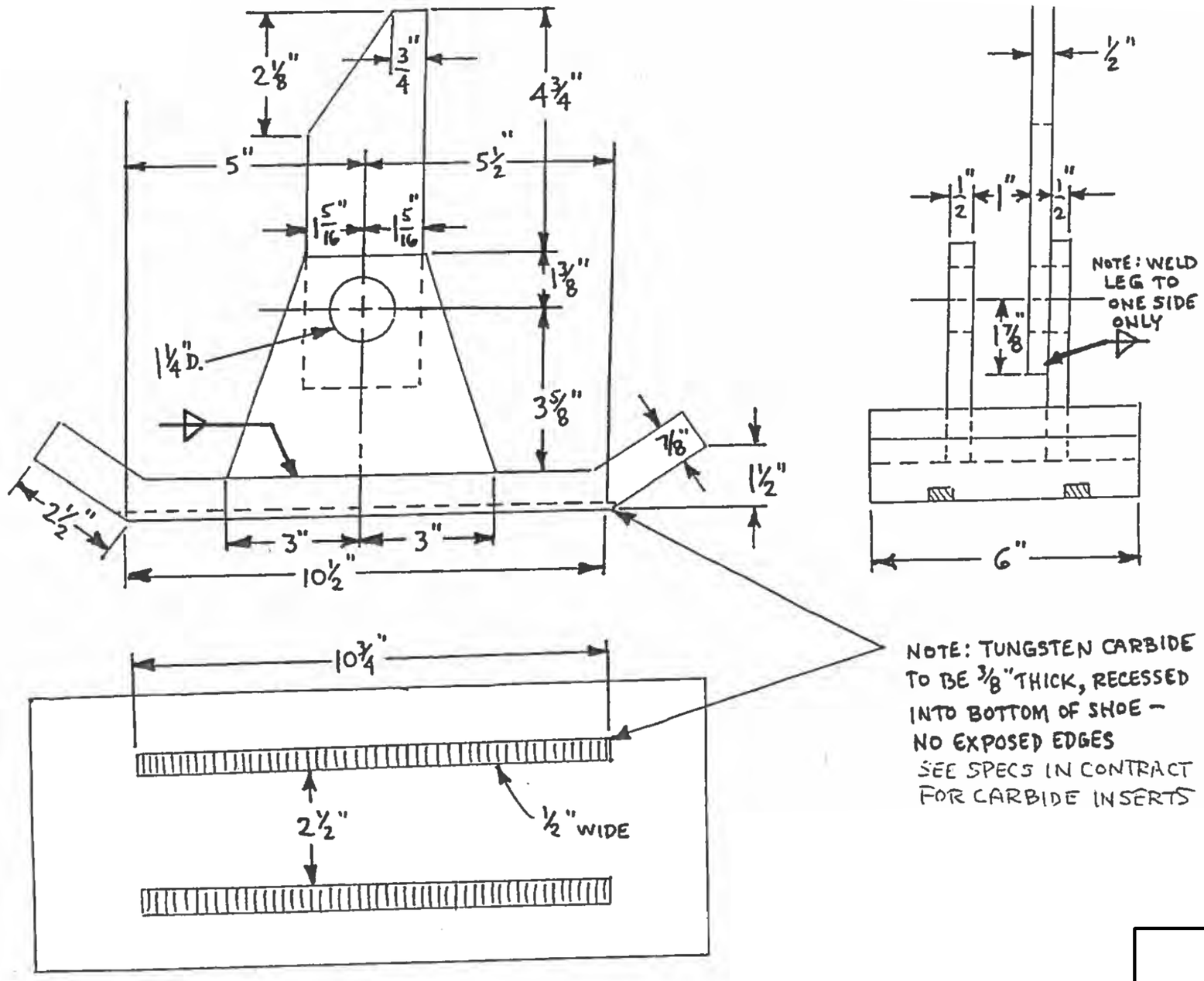

NEW JERSEY TURNPIKE AUTHORITY
MAINTENANCE DEPARTMENT
STANDARD SNOW PLOW DETAILS

6" SNOW PLOW SHOW
WITH EXTENDED LEG

THIS DRAWING IS BASED UPON NEW JERSEY DEPARTMENT OF TRANSPORTATION - DIVISION OF CONSTRUCTION AND MAINTENANCE - BUREAU OF EQUIPMENT - DRAWING NO. 4-205 - DATED APRIL 30, 1990: LAST REVISED APRIL 30, 1990

OFFICE OF THE DIRECTOR OF MAINTENANCE
WOODBRIDGE, NEW JERSEY

DRAWING
SPP-4-205

PROCUREMENT NO.:

PRICE LINES:

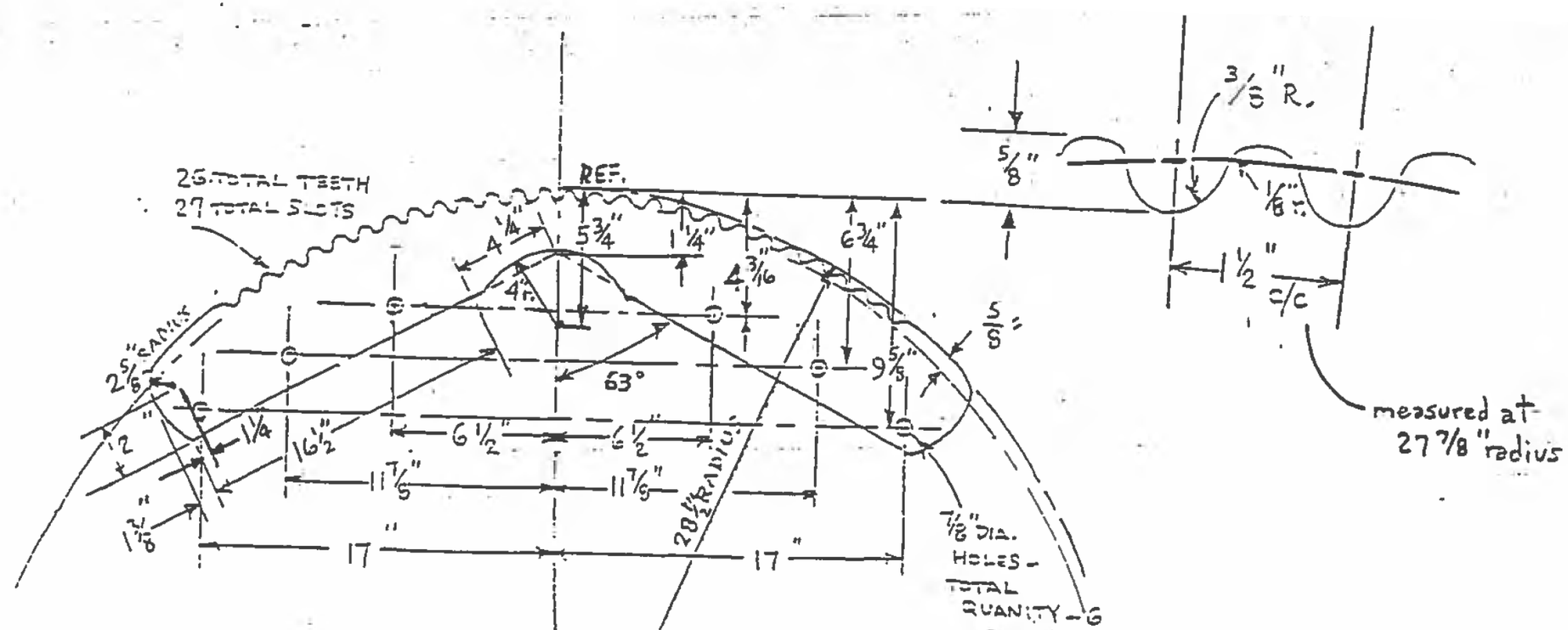

MATERIAL - 1" THICK STEEL - T1
110,000 PSI

NEW JERSEY TURNPIKE AUTHORITY
MAINTENANCE DEPARTMENT
STANDARD SNOW PLOW DETAILS

REMOVABLE GEAR FOR OLD STYLE
VALK P/R SNOW PLOW

THIS DRAWING IS BASED UPON NEW JERSEY DEPARTMENT OF TRANSPORTATION - DIVISION OF CONSTRUCTION AND MAINTENANCE - BUREAU OF EQUIPMENT - DRAWING NO. 4-207A - DATED MAY 9, 1994: LAST REVISED MAY 9, 1994

OFFICE OF THE DIRECTOR OF MAINTENANCE
WOODBRIDGE, NEW JERSEY

DRAWING
SPP-4-207-A

PROCUREMENT NO.:

PRICE LINES:

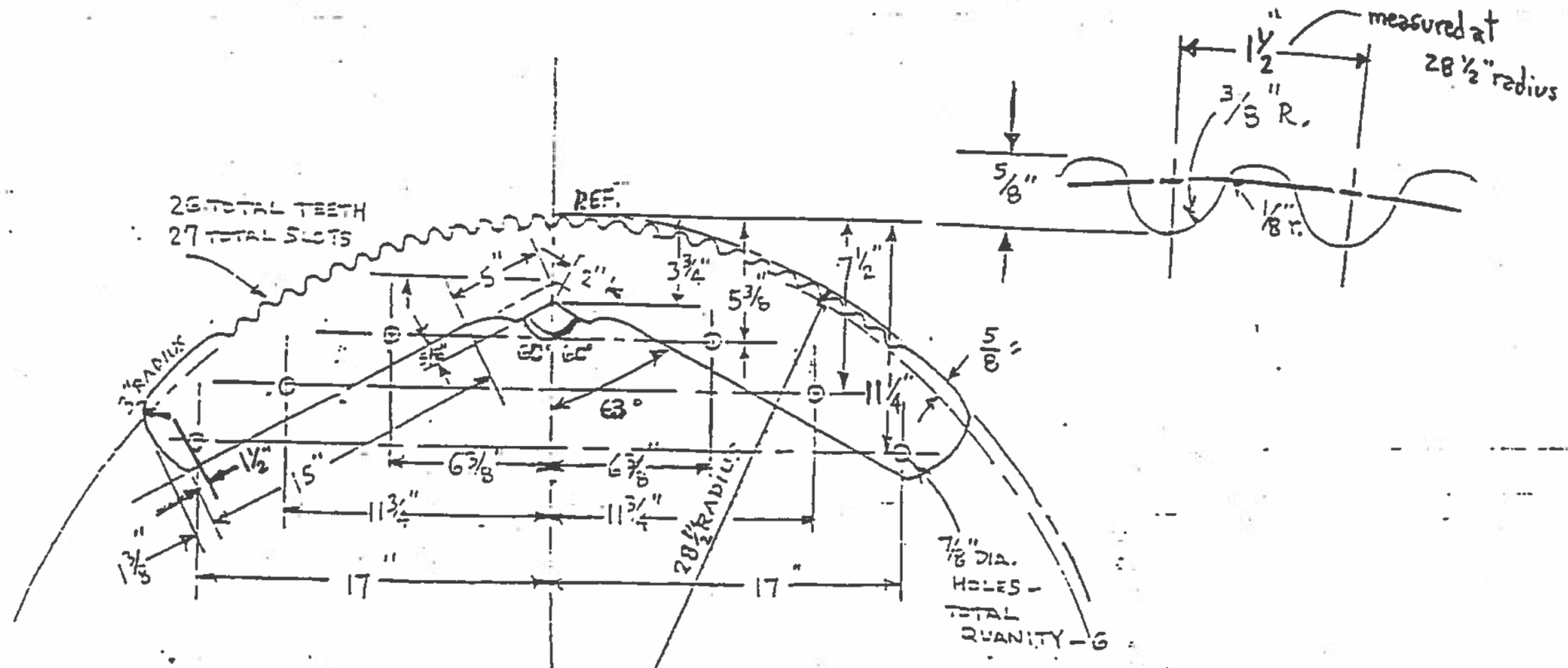

MATERIAL - 1" THICK STEEL - T1
110,000 PSI

NEW JERSEY TURNPIKE AUTHORITY
MAINTENANCE DEPARTMENT
STANDARD SNOW PLOW DETAILS

REMOVABLE GEAR FOR OLD STYLE
VALK P/R SNOW PLOW

THIS DRAWING IS BASED UPON NEW JERSEY DEPARTMENT OF TRANSPORTATION - DIVISION OF CONSTRUCTION AND MAINTENANCE - BUREAU OF EQUIPMENT - DRAWING NO. 4-207B - DATED MAY 9, 1994: LAST REVISED MAY 9, 1994

OFFICE OF THE DIRECTOR OF MAINTENANCE
WOODBRIDGE, NEW JERSEY

DRAWING
SPP-4-207-B

PROCUREMENT NO.:

PRICE LINES:

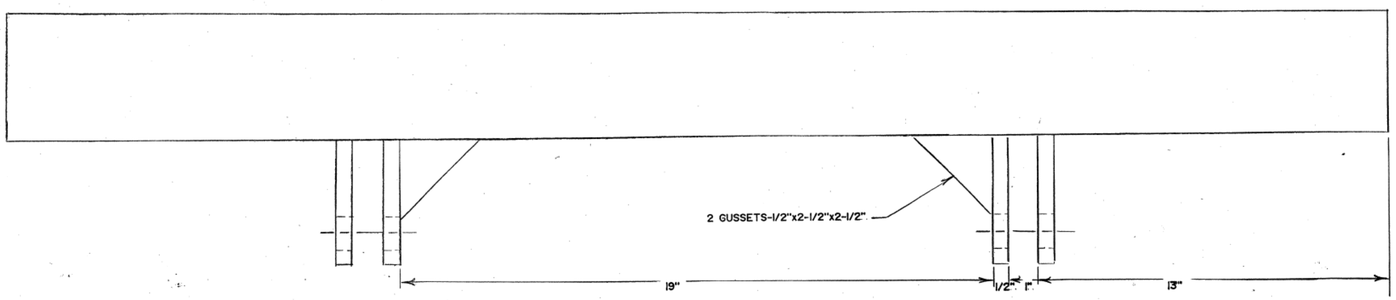

MATERIAL:
ANGLE----------STRUCTURAL STEEL
PLATE----------HOT ROLLED STRUCTURAL STEEL QUALITY

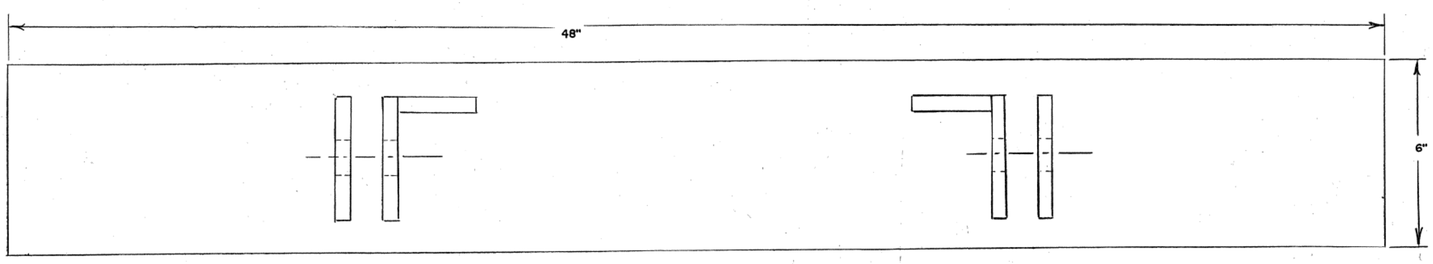

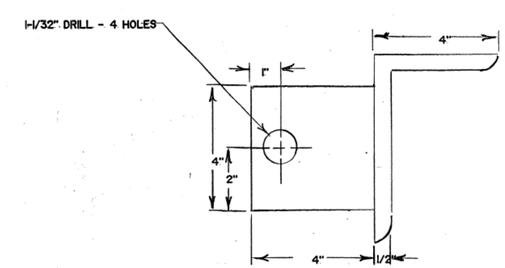

NEW JERSEY TURNPIKE AUTHORITY
MAINTENANCE DEPARTMENT
STANDARD SNOW PLOW DETAILS

CONTRACTOR'S BUMPER ANGLE

THIS DRAWING IS BASED UPON NEW JERSEY DEPARTMENT OF TRANSPORTATION - DIVISION OF CONSTRUCTION AND MAINTENANCE - BUREAU OF EQUIPMENT - DRAWING NO. 4-208 - DATED SEPT 6, 1991: LAST REVISED SEPT. 6, 1991

OFFICE OF THE DIRECTOR OF MAINTENANCE
WOODBRIDGE, NEW JERSEY

DRAWING
SPP-4-208

PROCUREMENT NO.:

PRICE LINES:

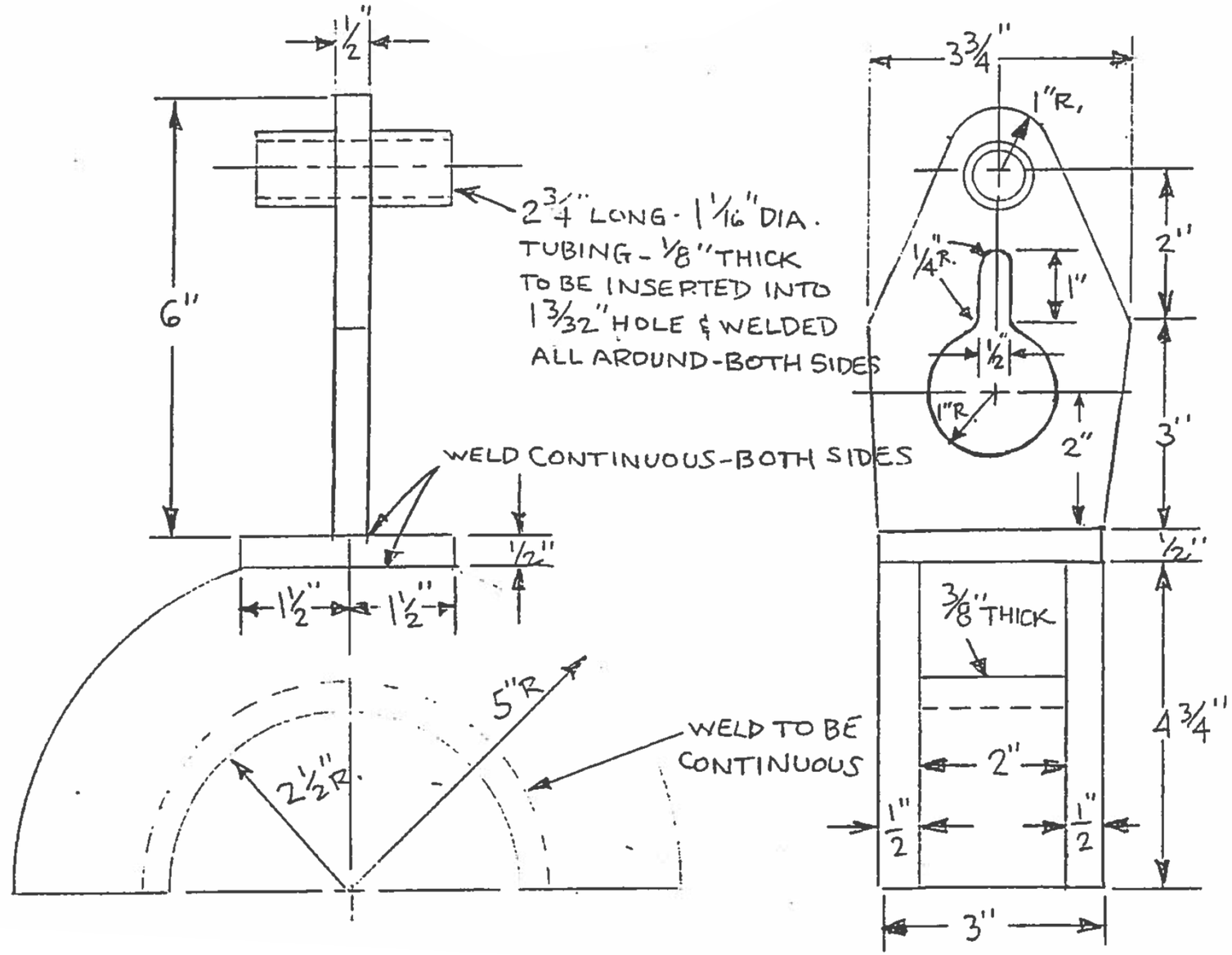

NEW JERSEY TURNPIKE AUTHORITY
MAINTENANCE DEPARTMENT
STANDARD SNOW PLOW DETAILS

LIFT CHAIN BLOCK -
POWER-REVERSING PLOW

THIS DRAWING IS BASED UPON NEW JERSEY DEPARTMENT OF TRANSPORTATION - DIVISION OF CONSTRUCTION AND MAINTENANCE - BUREAU OF EQUIPMENT - DRAWING NO. 4-209 - DATED MAY 9, 1994: LAST REVISED MAY 9, 1994

OFFICE OF THE DIRECTOR OF MAINTENANCE
WOODBRIDGE, NEW JERSEY

DRAWING
SPP-4-209

PROCUREMENT NO.:

PRICE LINES:

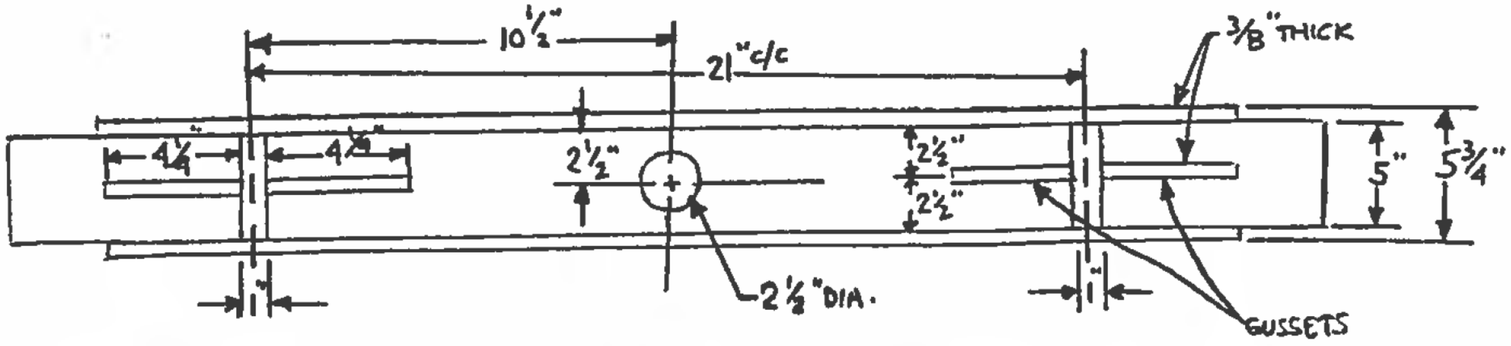

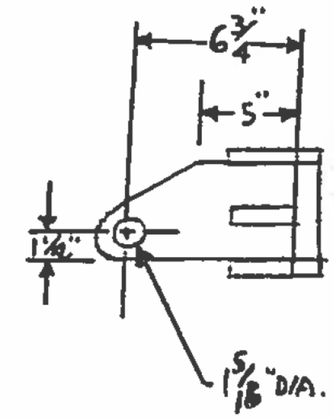

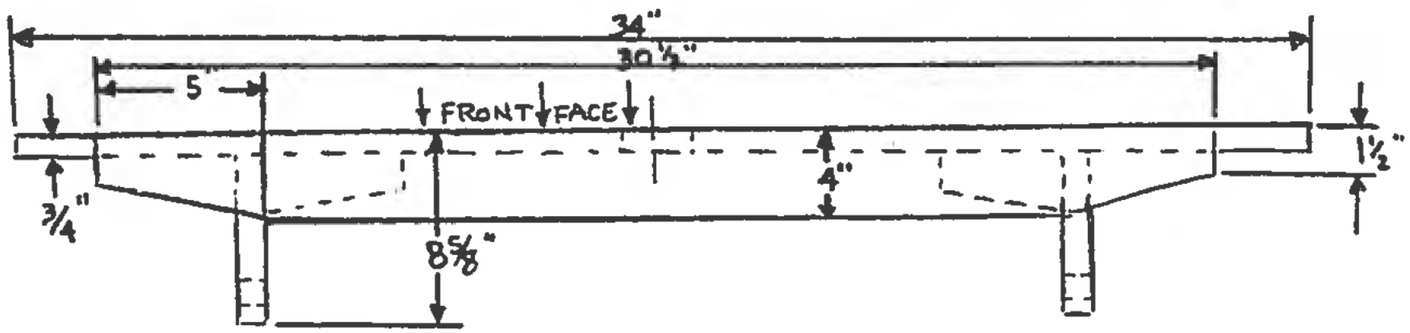

NOTE: ALL WELDS TO BE ALL-AROUND, CONTINUOUS EXCEPT NO WELDS ON FRONT FACE

MATERIAL: HOT ROLLED STRUCTURAL STEEL

NEW JERSEY TURNPIKE AUTHORITY
MAINTENANCE DEPARTMENT
STANDARD SNOW PLOW DETAILS

OSCILLATING DRIVE BAR
POWER-REVERSING

THIS DRAWING IS BASED UPON NEW JERSEY DEPARTMENT OF TRANSPORTATION - DIVISION OF CONSTRUCTION AND MAINTENANCE - BUREAU OF EQUIPMENT - DRAWING NO. 4-211 - DATED MAY 9, 1994: LAST REVISED MAY 9, 1994

OFFICE OF THE DIRECTOR OF MAINTENANCE
WOODBRIDGE, NEW JERSEY

DRAWING
SPP-4-211

PROCUREMENT NO.:

PRICE LINES:

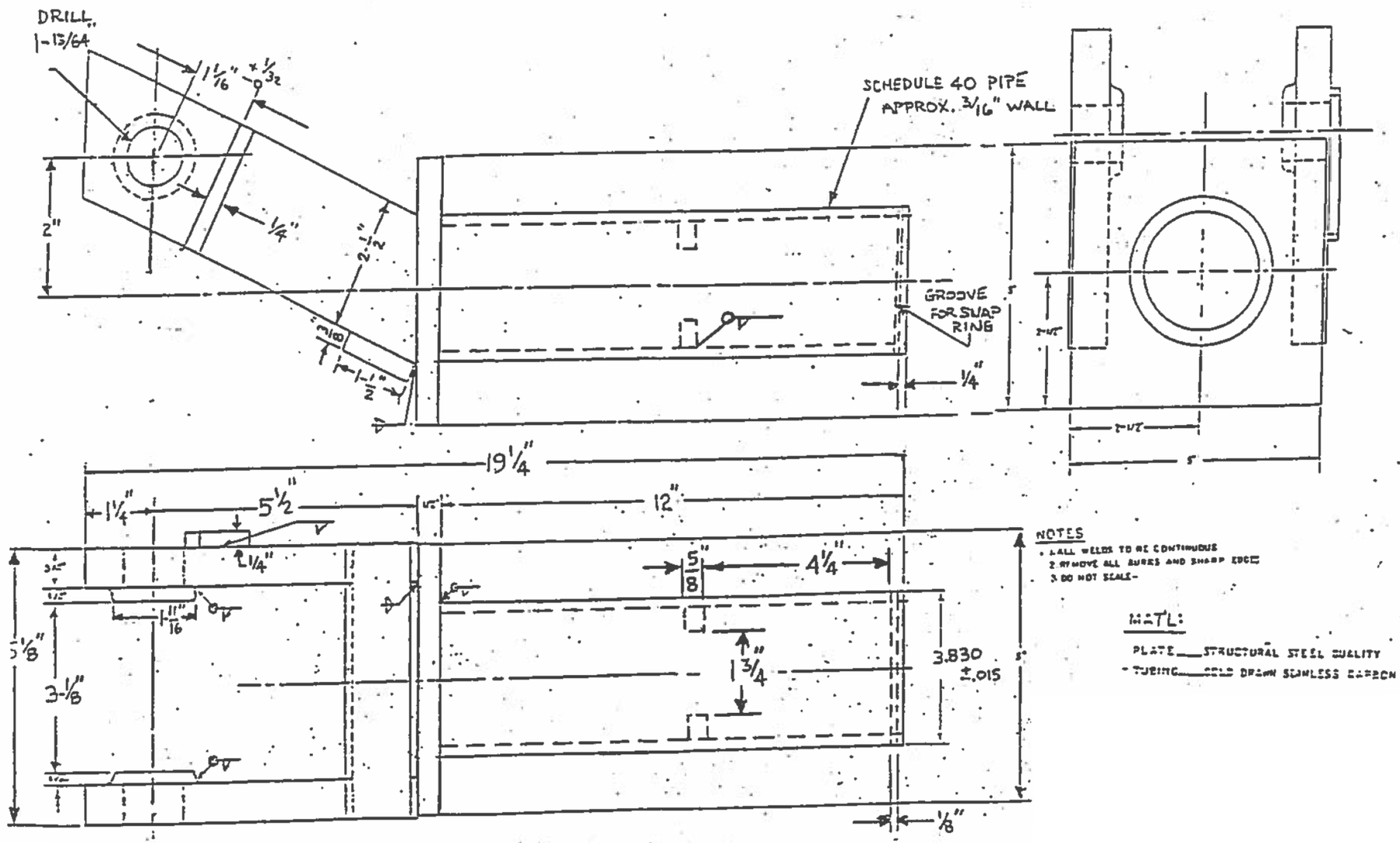

NOTES

1. ALL WELDS TO BE CONTINUOUS
2. REMOVE ALL BURRS AND SHARP EDGES
3. DO NOT SCALE-

MAT'L:

PLATE ___ STRUCTURAL STEEL QUALITY

TUBING ___ COLD DRAWN SEAMLESS CARBON STEEL

NEW JERSEY TURNPIKE AUTHORITY
MAINTENANCE DEPARTMENT
STANDARD SNOW PLOW DETAILS

CASTER ASSEMBLY (FABRICATION)

THIS DRAWING IS BASED UPON NEW JERSEY DEPARTMENT OF TRANSPORTATION - DIVISION OF CONSTRUCTION AND MAINTENANCE - BUREAU OF EQUIPMENT - DRAWING NO. 4-212

OFFICE OF THE DIRECTOR OF MAINTENANCE
WOODBRIDGE, NEW JERSEY

DRAWING
SPP-4-212

PROCUREMENT NO.:

PRICE LINES:

NOTES

1. THIS DRAWING SUPERSEDES DWG. NO. 4-126.
2. ALL VERTICAL RIBS 1/2" x 2-1/2" STRUCTURAL STEEL QUALITY PLATE.
3. MOLDBOARD SKIN TO BE 3/16" STRUCTURAL STEEL QUALITY PLATE, SMOOTH ROLLED OR BRAKE FORMED.
4. MOLDBOARD SKIN TO EXTEND TO BOTTOM EDGE OF FRONT ANGLE, SKIN EDGE - TACK WELD ONLY.
5. BLADE TO BE HIGH CARBON ABRASIVE RESISTANT STEEL.
6. FOR CARBIDE EDGE (BLADE) SEE N.J.D.O.T. BUR. OF EQUIP. DWG. NO. 4-113.
7. BLADE TO BE ATTACHED TO MOLDBOARD W/5/8" x 11 UNC x 2" CARRIAGE BOLTS, NUTS & LOCKWASHERS (N/A LAST 2 BOLTS ON EACH SIDE).
8. BOLT HOLES IN RIBS FOR ATTACHING MOLDBOARD HINGE TO BE SPACED APART 1-3/4".
9. ALL WELDS TO BE 3/16" MIN.

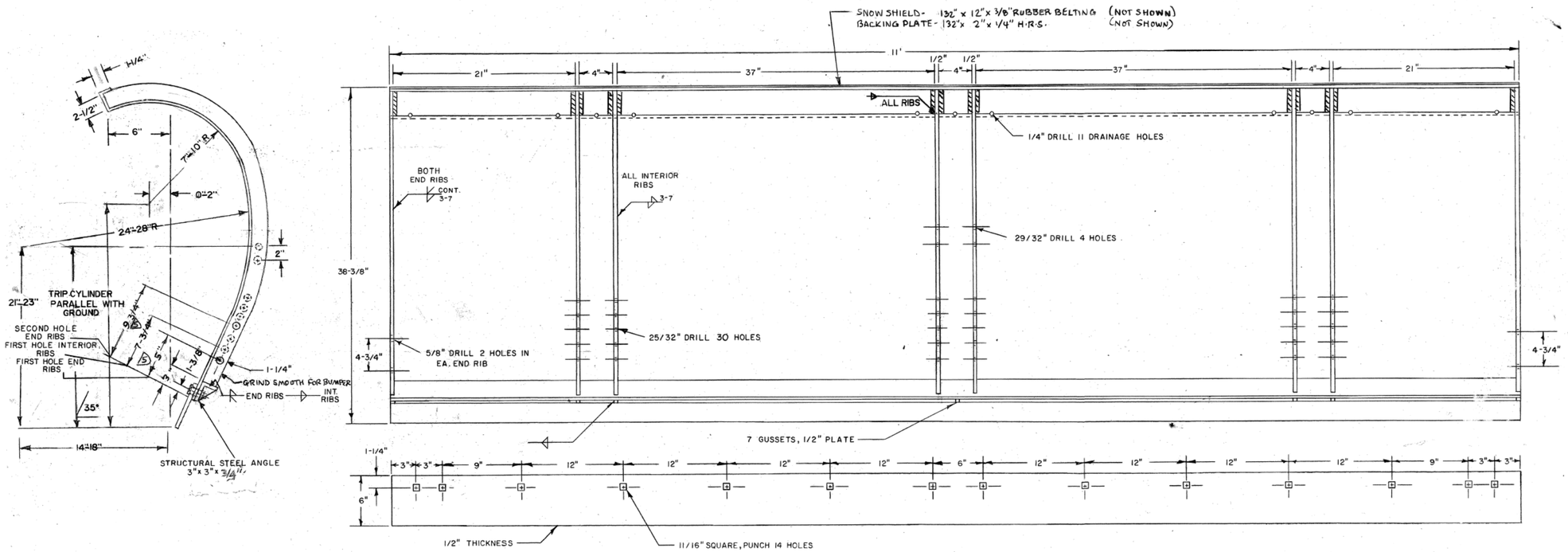

NEW JERSEY TURNPIKE AUTHORITY
MAINTENANCE DEPARTMENT
STANDARD SNOW PLOW DETAILS

SNOW PLOW MODEL M.R. 11-36-MOD-J

THIS DRAWING IS BASED UPON NEW JERSEY DEPARTMENT OF TRANSPORTATION - DIVISION OF CONSTRUCTION AND MAINTENANCE - BUREAU OF EQUIPMENT - DRAWING NO. 4-213 - DATED JUNE 22, 1995; LAST REVISED MARCH 26, 1995

OFFICE OF THE DIRECTOR OF MAINTENANCE
WOODBRIDGE, NEW JERSEY

DRAWING
SPP-4-213

PROCUREMENT NO.:

PRICE LINES:

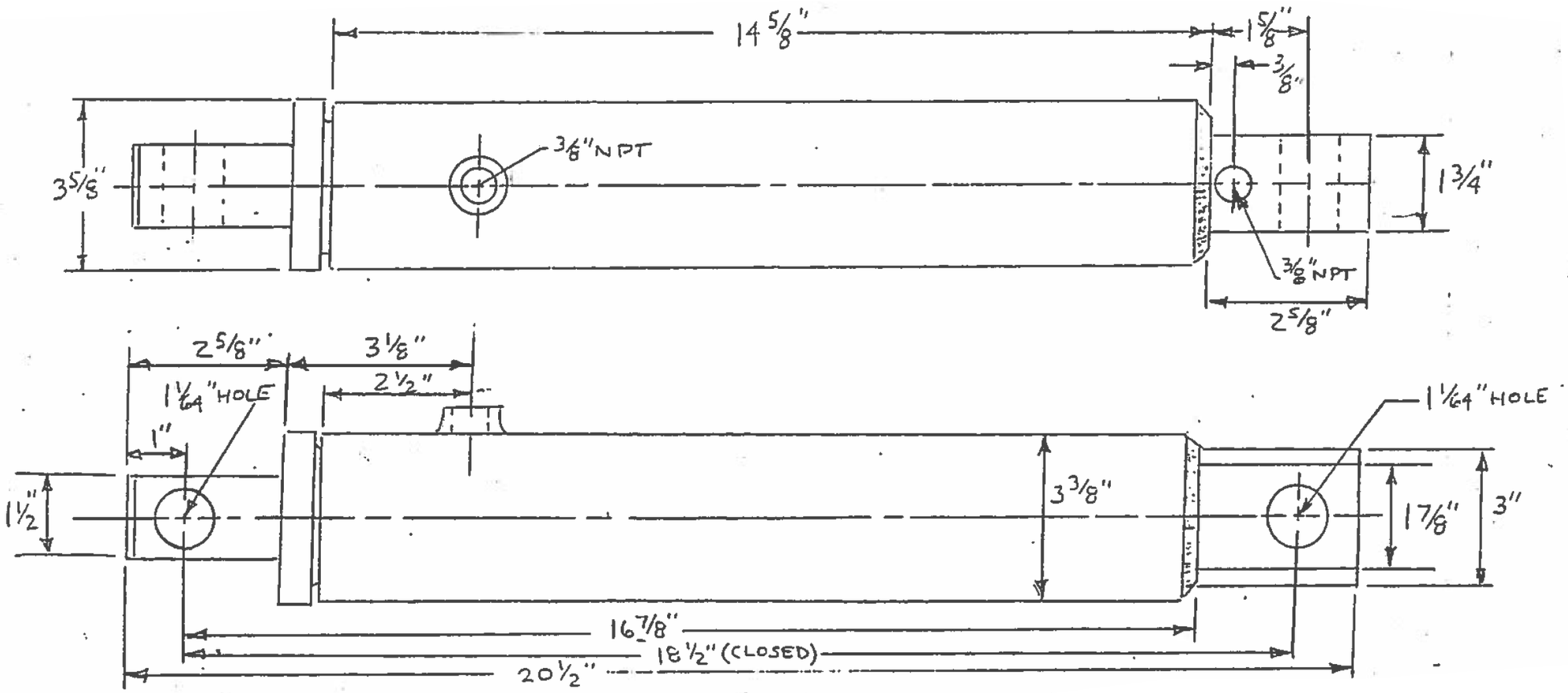

NOTES

1. ROD TO BE CHROME PLATED
2. MINIMUM WORKING PRESSURE - 2000 PSI
3. CYLINDER TO HAVE 10" STROKE AND 3" BORE

NEW JERSEY TURNPIKE AUTHORITY
MAINTENANCE DEPARTMENT
STANDARD SNOW PLOW DETAILS

3" DOUBLE ACTING CYLINDER

THIS DRAWING IS BASED UPON NEW JERSEY DEPARTMENT OF TRANSPORTATION - DIVISION OF CONSTRUCTION AND MAINTENANCE - BUREAU OF EQUIPMENT - DRAWING NO. 4-214 - DATED SEPTEMBER 1, 1995; LAST REVISED SEPT. 1, 1995

OFFICE OF THE DIRECTOR OF MAINTENANCE
WOODBRIDGE, NEW JERSEY

DRAWING
SPP-4-214

PROCUREMENT NO.:

PRICE LINES:

NOTES

1. ALL SHARP EDGES AND BURRS TO BE REMOVED.
2. FASTEN CURB BUMPERS TO MOLDBOARD W/ 5/8" X 11UNC BOLTS, NUTS AND LOCKWASHERS.

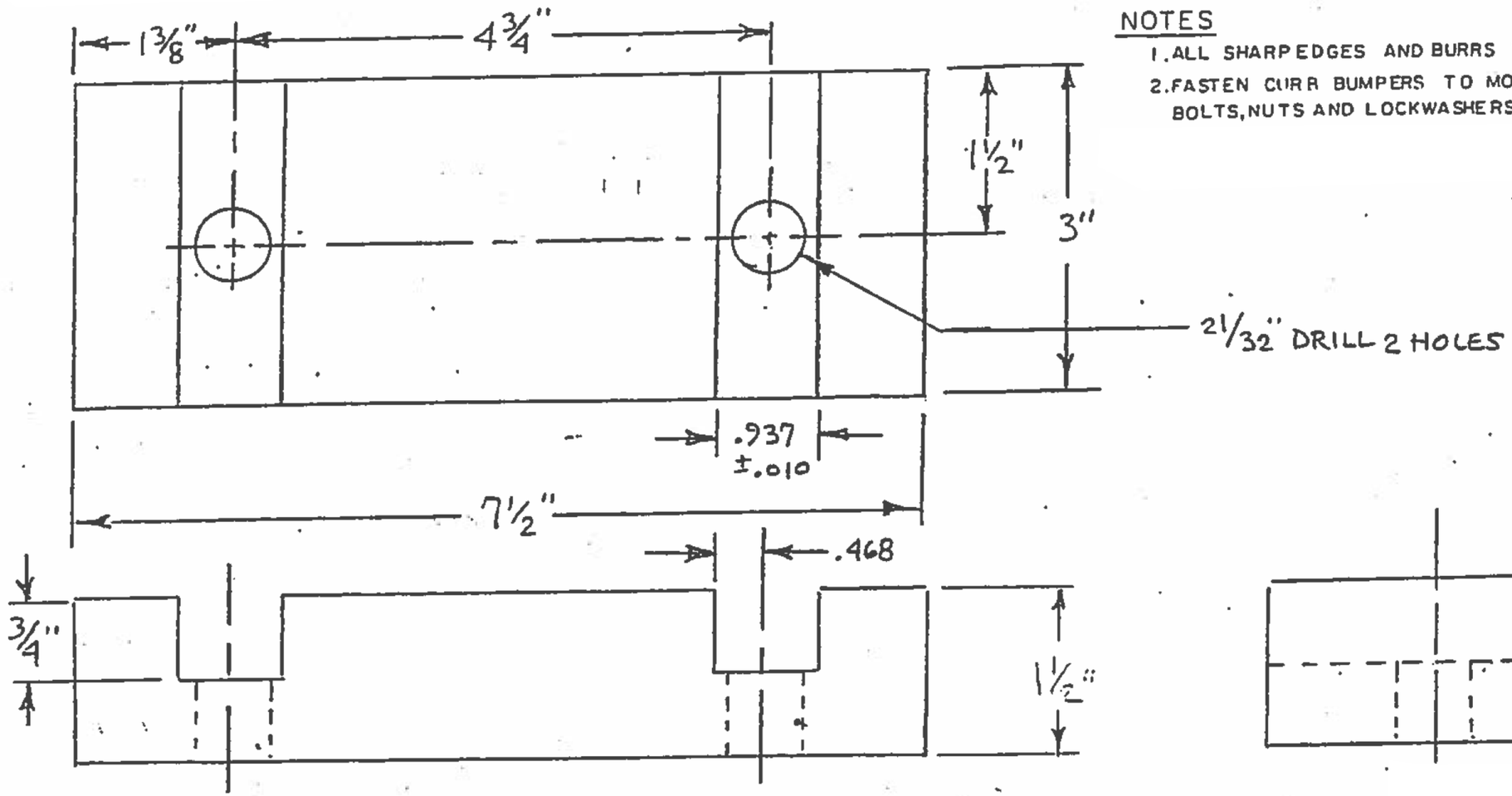

MATERIAL: MEDIUM CARBON STEEL

NEW JERSEY TURNPIKE AUTHORITY
MAINTENANCE DEPARTMENT
STANDARD SNOW PLOW DETAILS

CURB BUMPER

THIS DRAWING IS BASED UPON NEW JERSEY DEPARTMENT OF TRANSPORTATION - DIVISION OF CONSTRUCTION AND MAINTENANCE - BUREAU OF EQUIPMENT - DRAWING NO. 4-215 - DATED SEPTEMBER 1, 1995; LAST REVISED SEPT. 1, 1995

OFFICE OF THE DIRECTOR OF MAINTENANCE
WOODBRIDGE, NEW JERSEY

DRAWING
SPP-4-215

PROCUREMENT NO.:

PRICE LINES:

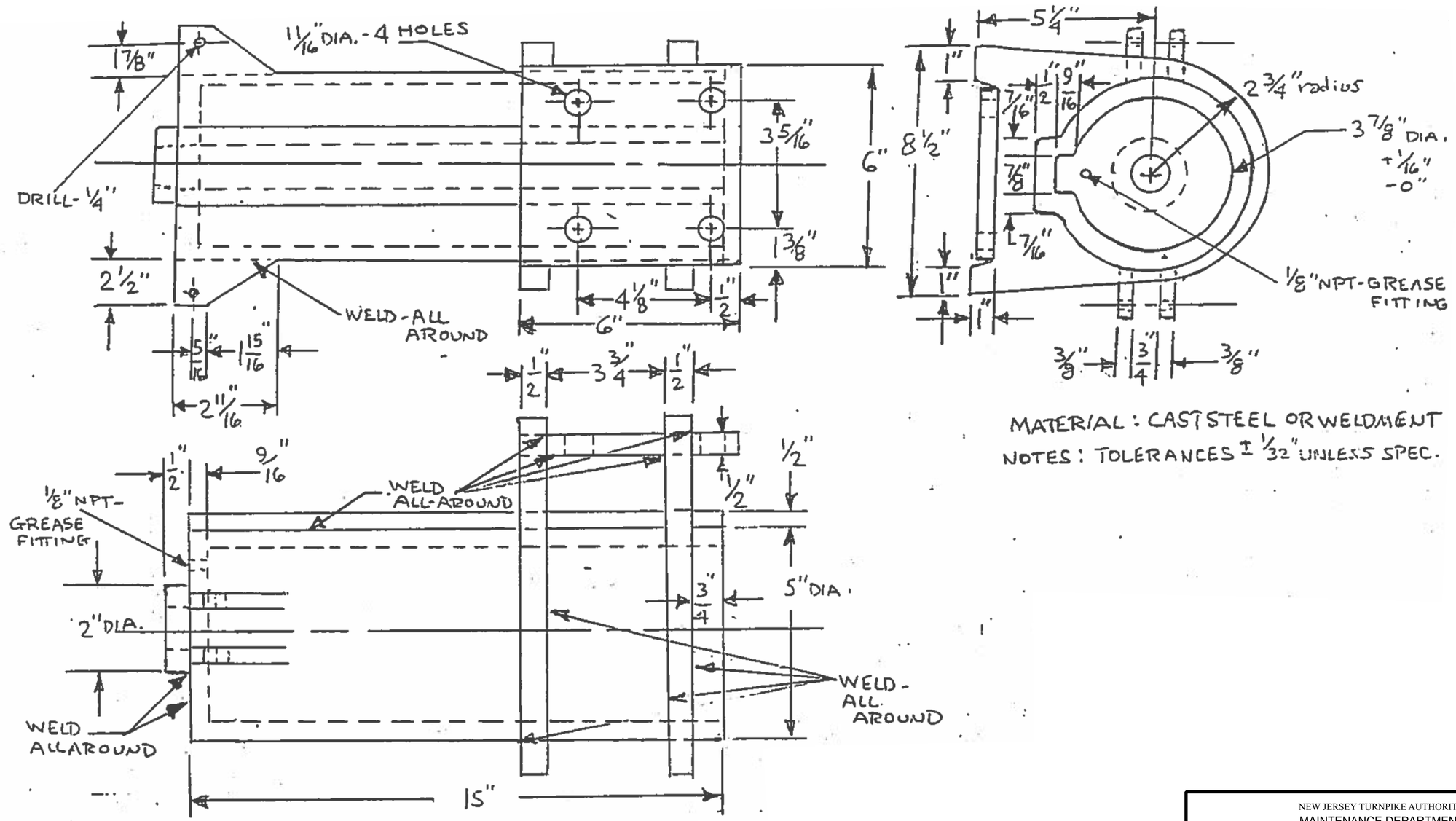

MATERIAL : CAST STEEL OR WELDMENT

NOTES : TOLERANCES ± 1/32" UNLESS SPEC.

NEW JERSEY TURNPIKE AUTHORITY
MAINTENANCE DEPARTMENT
STANDARD SNOW PLOW DETAILS

CASTER HOUSING

THIS DRAWING IS BASED UPON NEW JERSEY DEPARTMENT OF TRANSPORTATION - DIVISION OF CONSTRUCTION AND MAINTENANCE - BUREAU OF EQUIPMENT - DRAWING NO. 4-216 - DATED SEPTEMBER 1, 1995; LAST REVISED SEPT. 1, 1995

OFFICE OF THE DIRECTOR OF MAINTENANCE
WOODBRIDGE, NEW JERSEY

DRAWING
SPP-4-216

PROCUREMENT NO.:

PRICE LINES:

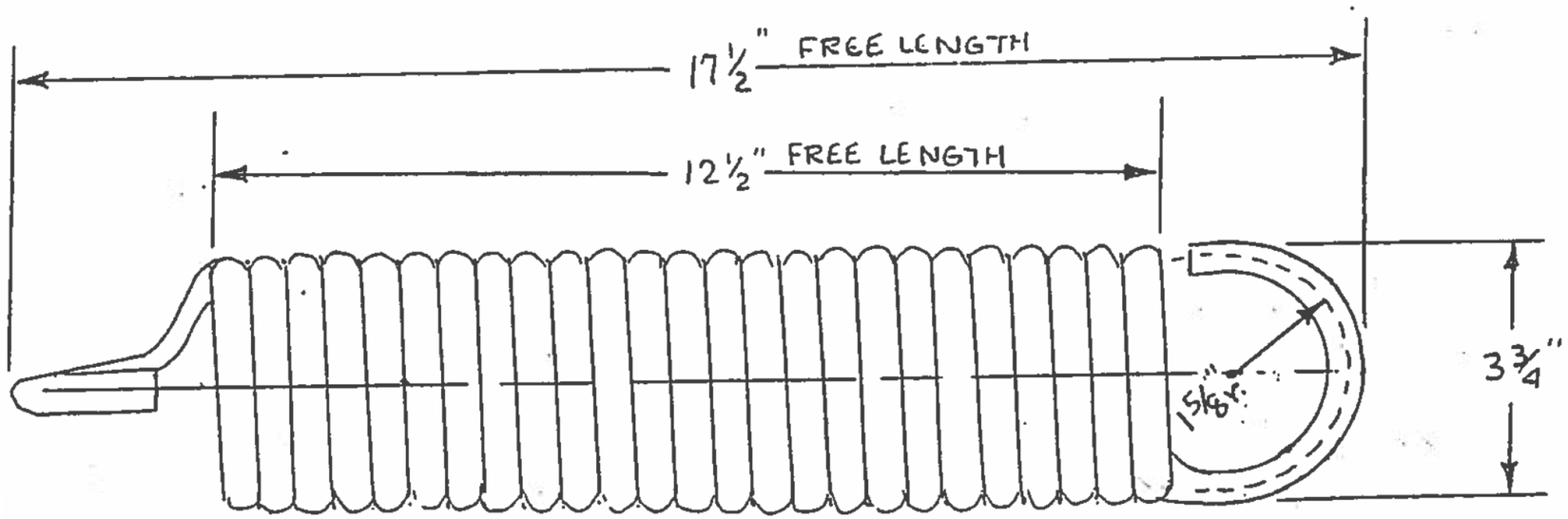

NO. OF COILS: 25
DIA. OF WIRE: ½"

MATERIAL: ASTM-A229 STEEL WIRE, OIL TEMPERED

NEW JERSEY TURNPIKE AUTHORITY
MAINTENANCE DEPARTMENT
STANDARD SNOW PLOW DETAILS

EXTERNAL COIL
TRIP SPRING

THIS DRAWING IS BASED UPON NEW JERSEY DEPARTMENT OF TRANSPORTATION - DIVISION OF CONSTRUCTION AND MAINTENANCE - BUREAU OF EQUIPMENT - DRAWING NO. 4-217 - DATED AUGUST 31, 1995; LAST REVISED AUG. 31, 1995

OFFICE OF THE DIRECTOR OF MAINTENANCE
WOODBRIDGE, NEW JERSEY

DRAWING
SPP-4-217

PROCUREMENT NO.:

PRICE LINES:

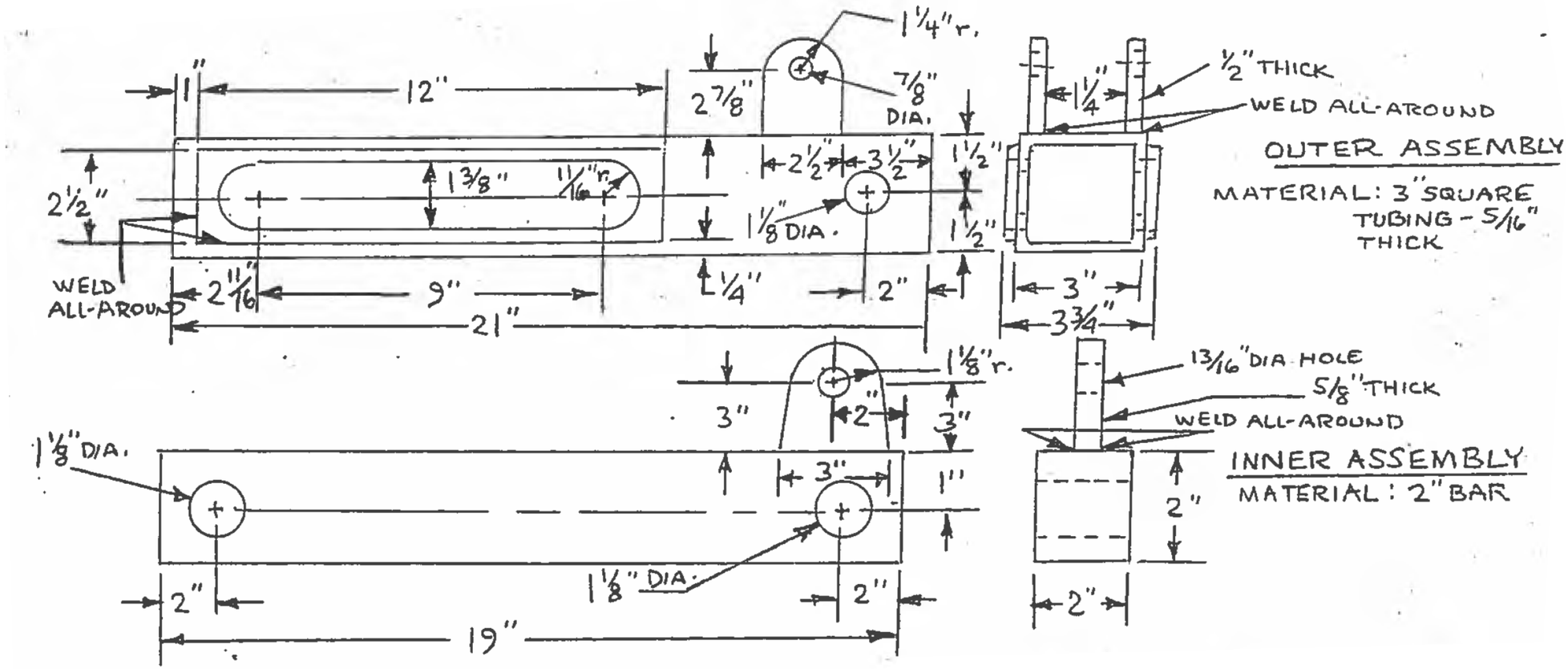

NEW JERSEY TURNPIKE AUTHORITY
MAINTENANCE DEPARTMENT
STANDARD SNOW PLOW DETAILS

TRIP LIMITER -
INNER AND OUTER

THIS DRAWING IS BASED UPON NEW JERSEY DEPARTMENT OF TRANSPORTATION - DIVISION OF CONSTRUCTION AND MAINTENANCE - BUREAU OF EQUIPMENT - DRAWING NO. 4-218 - DATED AUGUST 31, 1995; LAST REVISED AUG. 31, 1995

OFFICE OF THE DIRECTOR OF MAINTENANCE
WOODBRIDGE, NEW JERSEY

DRAWING
SPP-4-218

PROCUREMENT NO.:

PRICE LINES:

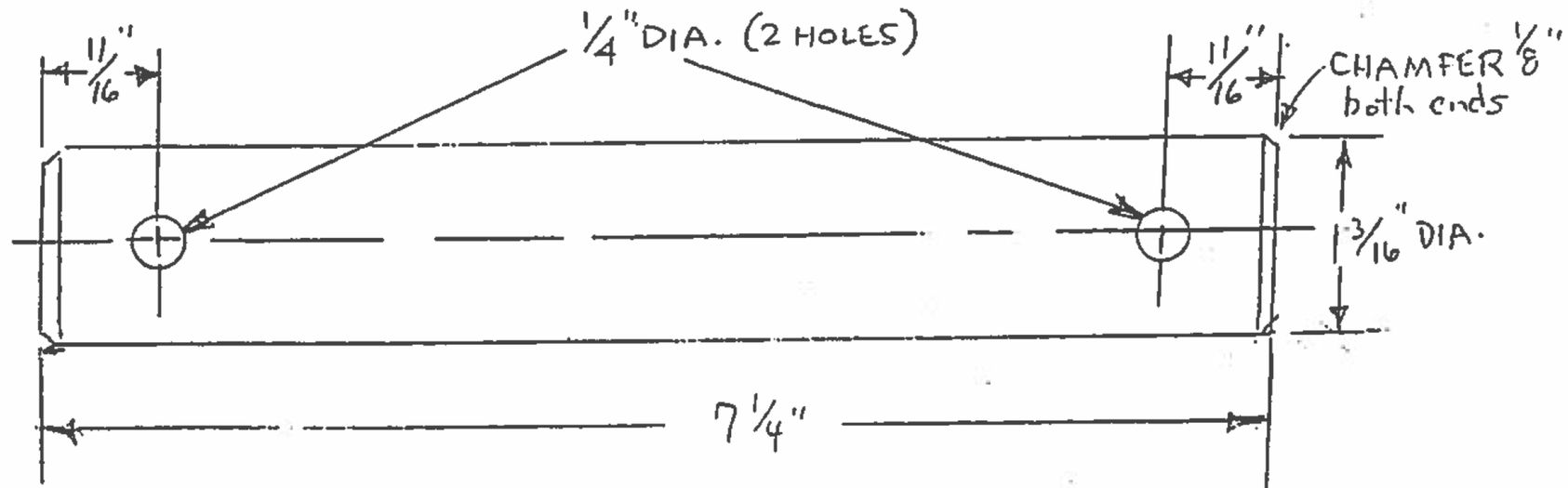

MATERIAL: CARBON STEEL C1020-1040

NEW JERSEY TURNPIKE AUTHORITY
MAINTENANCE DEPARTMENT
STANDARD SNOW PLOW DETAILS

AXLE-PIN TYPE

THIS DRAWING IS BASED UPON NEW JERSEY DEPARTMENT OF TRANSPORTATION - DIVISION OF CONSTRUCTION AND MAINTENANCE - BUREAU OF EQUIPMENT - DRAWING NO. 4-219 - DATED SEPTEMBER 1, 1995; LAST REVISED SEPT. 1, 1995

OFFICE OF THE DIRECTOR OF MAINTENANCE
WOODBRIDGE, NEW JERSEY

DRAWING
SPP-4-219

PROCUREMENT NO.:

PRICE LINES:

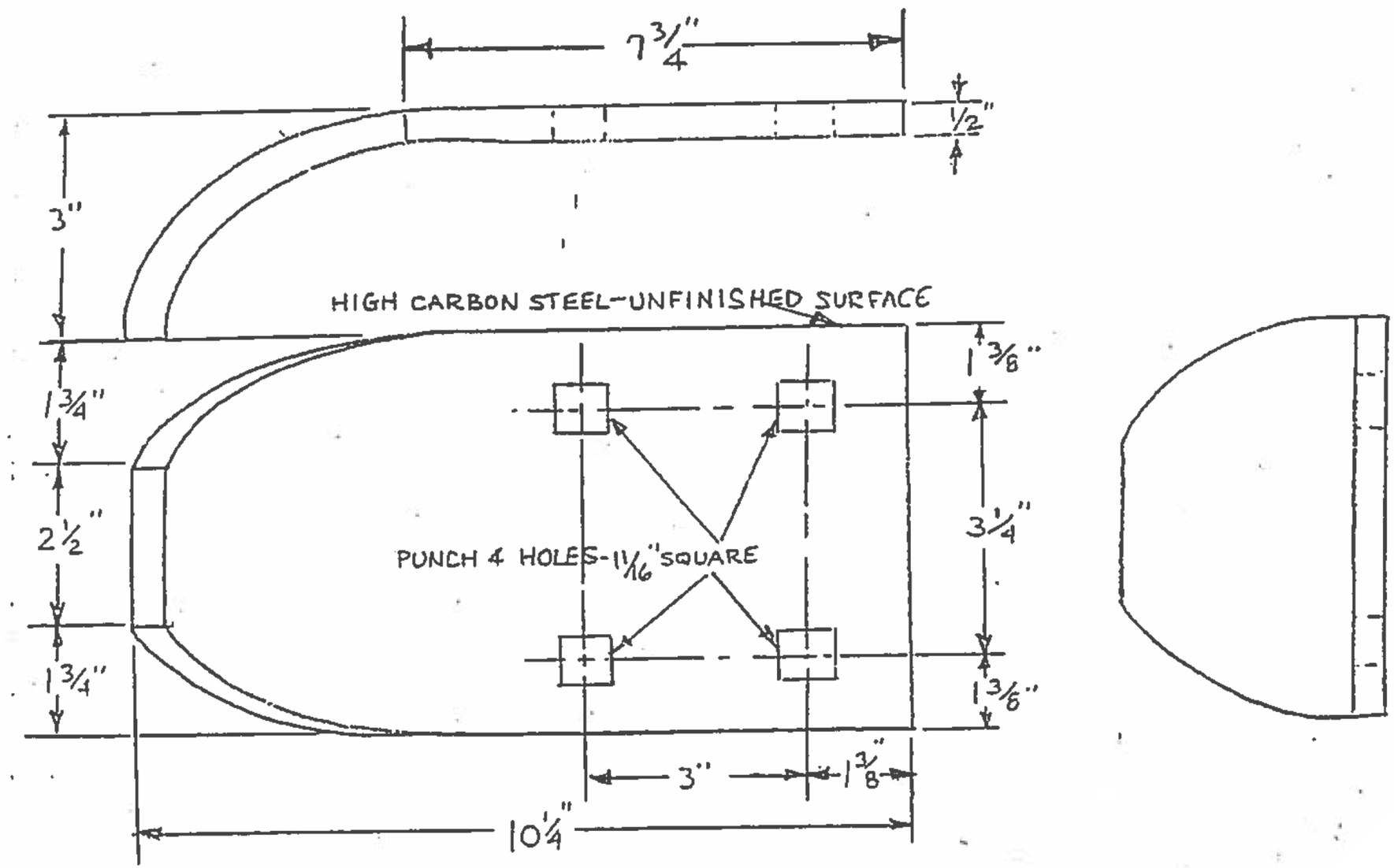

NEW JERSEY TURNPIKE AUTHORITY
MAINTENANCE DEPARTMENT
STANDARD SNOW PLOW DETAILS

UNIVERSAL WRAP AROUND

THIS DRAWING IS BASED UPON NEW JERSEY DEPARTMENT OF TRANSPORTATION - DIVISION OF CONSTRUCTION AND MAINTENANCE - BUREAU OF EQUIPMENT - DRAWING NO. 4-220 - DATED AUGUST 31, 1995; LAST REVISED AUG. 31, 1995

OFFICE OF THE DIRECTOR OF MAINTENANCE
WOODBRIDGE, NEW JERSEY

DRAWING
SPP-4-220

PROCUREMENT NO.:

PRICE LINES:

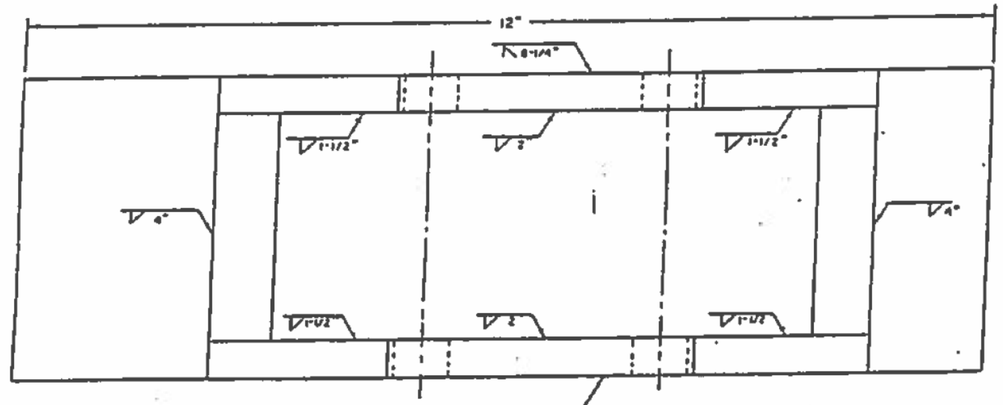

NOTES

1. ALL MAT'L TO BE MEDIUM CARBON STEEL.
2. ALL WELDS TO BE 3/16" WITH LENGTH AS NOTED.
3. DRILLED HOLES (11/16") IN SHOE MUST BE DRILLED STRAIGHT AND PARALLEL.
4. SHOE TO BE CONNECTED TO MOLDBOARD ANGLE BY TWO (2) 5/8" x 6" LG. BOLTS WITH LOCKWASHERS & NUTS.

- NOTE: EAR TO BE BEVELLED & WELDED SO THAT THERE IS NO WELD EXPOSED WELD EXCEEDING 4" MAXIMUM WIDTH

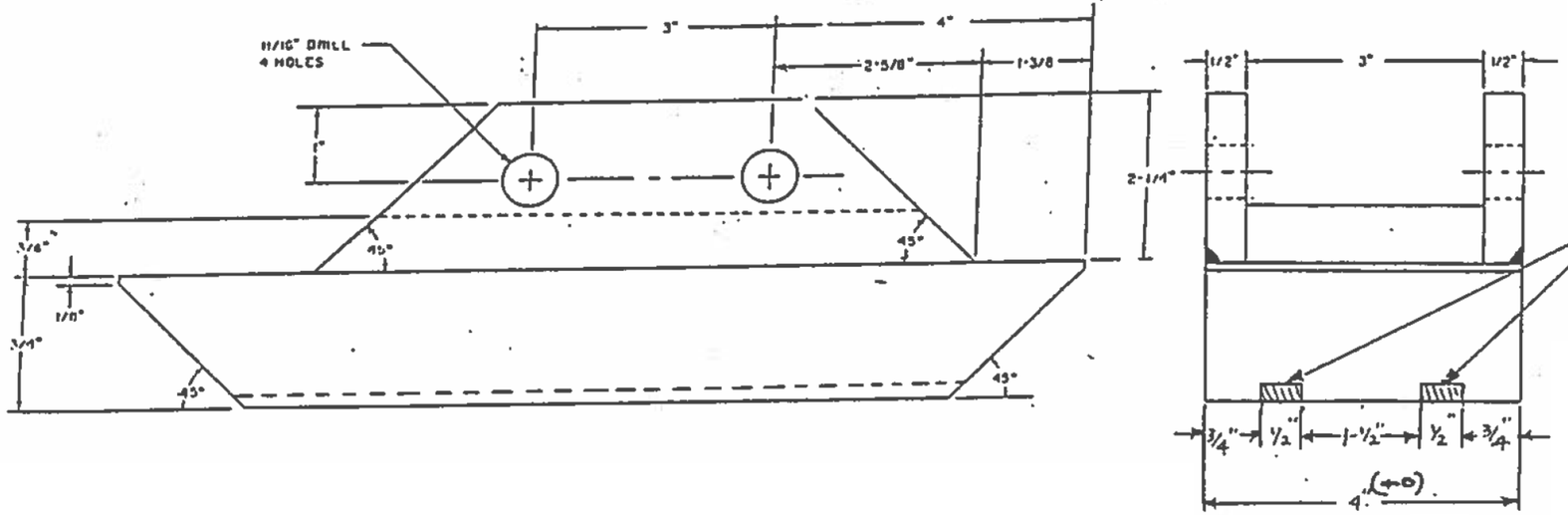

TUNGSTEN CARBIDE TO BE 3/8" THICK, RECESSED INTO BOTTOM OF SHOES, NO EXPOSED EDGES.
SEE CONTRACT FOR SPECS ON CARBIDE INSERTS

NEW JERSEY TURNPIKE AUTHORITY
MAINTENANCE DEPARTMENT
STANDARD SNOW PLOW DETAILS

MOLDBOARD SHOE WITH TUNGSTEN CARBIDE INSERTS

THIS DRAWING IS BASED UPON NEW JERSEY DEPARTMENT OF TRANSPORTATION - DIVISION OF CONSTRUCTION AND MAINTENANCE - BUREAU OF EQUIPMENT - DRAWING NO. 4-221 - DATED FEBRUARY 14, 1996; LAST REVISED MARCH 23, 2001

OFFICE OF THE DIRECTOR OF MAINTENANCE
WOODBRIDGE, NEW JERSEY

DRAWING
SPP-4-221

PROCUREMENT NO.:

PRICE LINES:

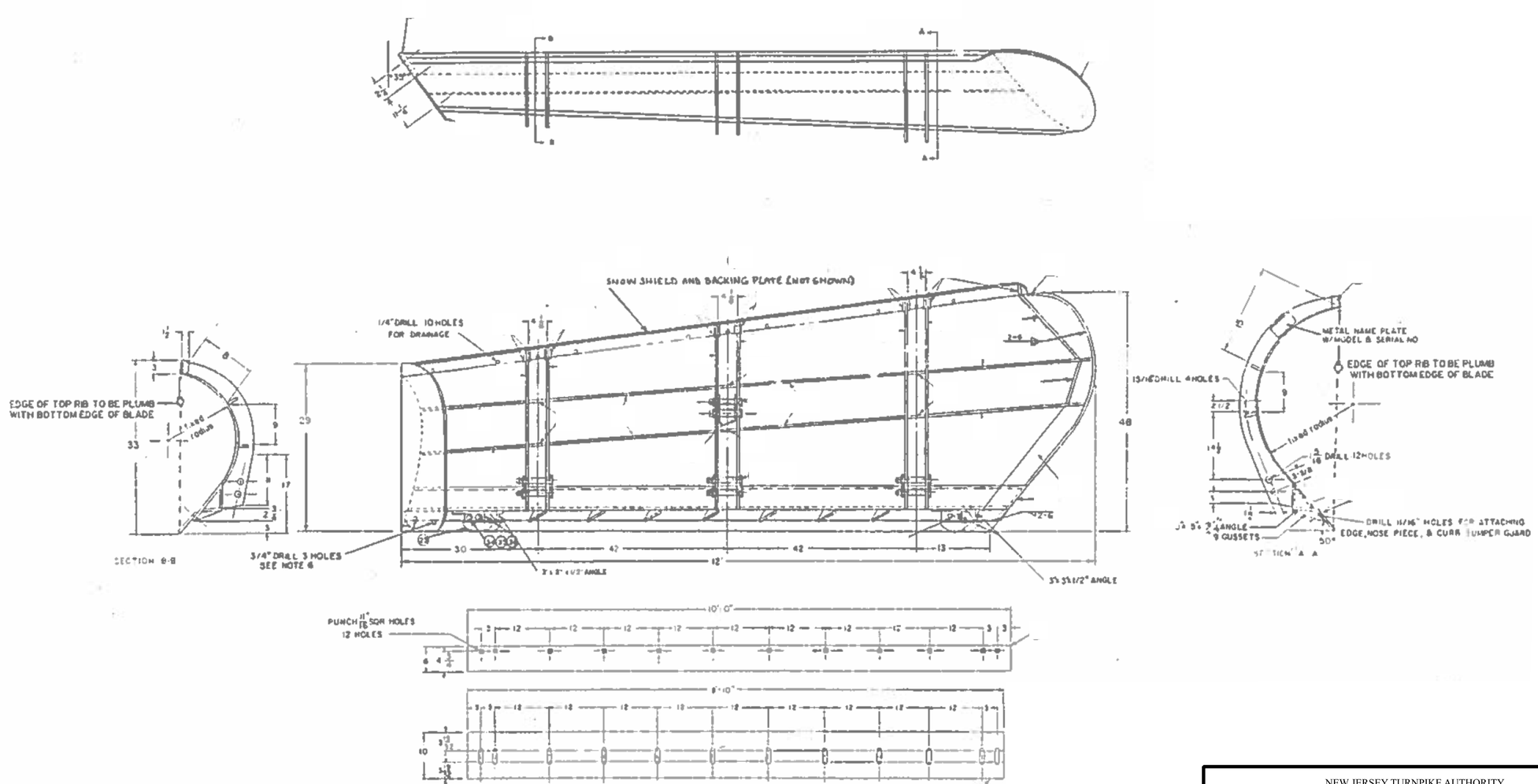

NEW JERSEY TURNPIKE AUTHORITY
MAINTENANCE DEPARTMENT
STANDARD SNOW PLOW DETAILS

SNOW PLOW
MODEL O.R. 1200-48-1-HD

THIS DRAWING IS BASED UPON NEW JERSEY DEPARTMENT OF TRANSPORTATION - DIVISION OF CONSTRUCTION AND MAINTENANCE - BUREAU OF EQUIPMENT - DRAWING NO. 4-222 - DATED FEBRUARY 5, 1994; LAST REVISED FEB. 5, 1994

OFFICE OF THE DIRECTOR OF MAINTENANCE
WOODBRIDGE, NEW JERSEY

DRAWING
SPP-4-222

PROCUREMENT NO.:

PRICE LINES:

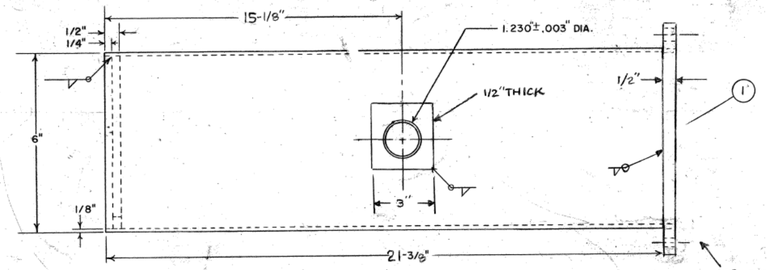

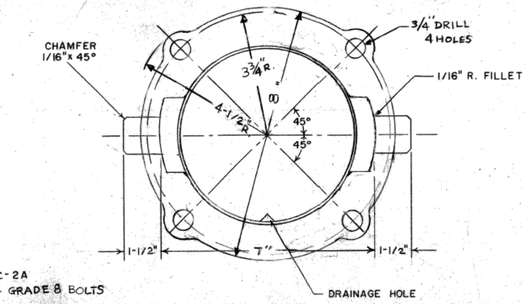

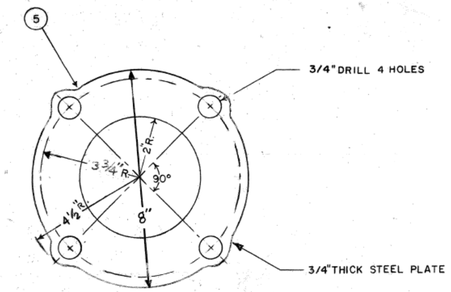

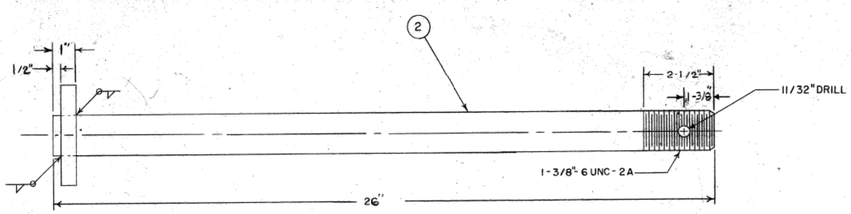

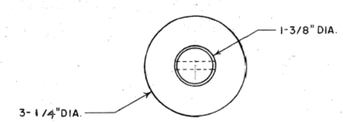

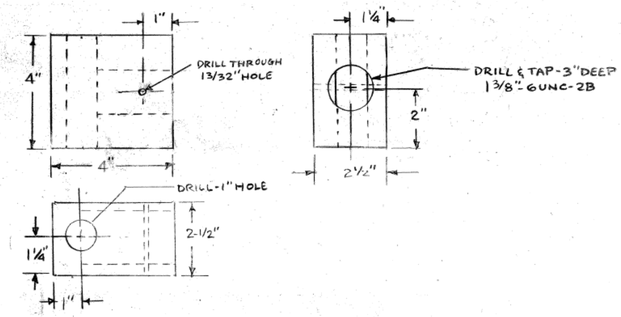

NOTE

TENSION ROD ASSEMBLY IS COMPOSED OF ITEMS (2) AND (6)

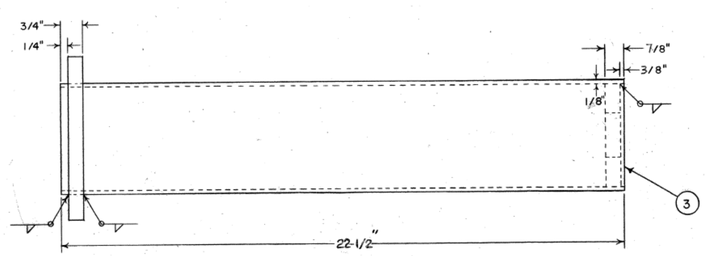

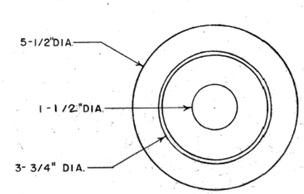

ITEM	NAME	QTY
1	OUTSIDE TUBE ASSEMBLY	1
2	TENSION ROD	1
3	INSIDE TUBE ASSEMBLY	1
4	RECOIL SPRING	1
5	COVER PLATE	1
6	PLOW COUPLING	1

MAT'L:

PLATE — STRUCTURAL STEEL QUALITY
TUBING — DRAWN OVER MANDREL CARBON STEEL
ROUND STOCK W/O THREADING — COLD FINISHED STEEL
ROUND STOCK W/THREADING — COLD FINISHED MEDIUM CARBON STEEL
SPRING — SPRING STEEL

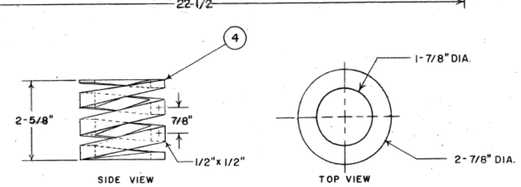

NEW JERSEY TURNPIKE AUTHORITY
MAINTENANCE DEPARTMENT
STANDARD SNOW PLOW DETAILS

TRIP SPRING ASSEMBLY

THIS DRAWING IS BASED UPON NEW JERSEY DEPARTMENT OF TRANSPORTATION - DIVISION OF CONSTRUCTION AND MAINTENANCE - BUREAU OF EQUIPMENT - DRAWING NO. 4-224-1 - DATED OCTOBER 8, 1997; LAST REVISED OCT. 8, 1997

OFFICE OF THE DIRECTOR OF MAINTENANCE
WOODBRIDGE, NEW JERSEY

DRAWING
SPP-4-224-1

PROCUREMENT NO.:

PRICE LINES:

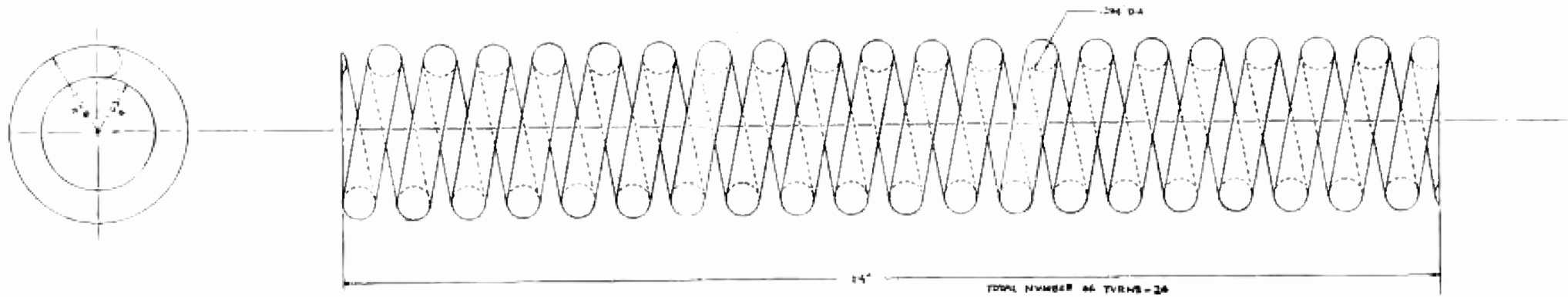

INSIDE SPRING

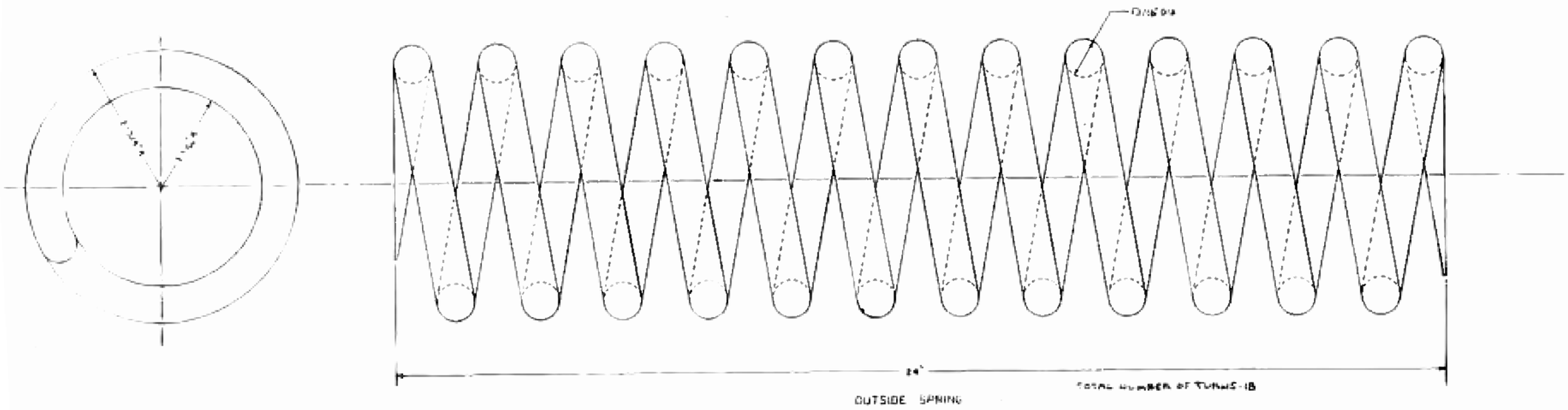

OUTSIDE SPRING

NOTES:
1. ENDS OF SPRINGS TO BE TAPERED, SQUARED AND GROUND

NEW JERSEY TURNPIKE AUTHORITY
MAINTENANCE DEPARTMENT
STANDARD SNOW PLOW DETAILS

TRIP SPRING ASSEMBLY

THIS DRAWING IS BASED UPON NEW JERSEY DEPARTMENT OF TRANSPORTATION - DIVISION OF CONSTRUCTION AND MAINTENANCE - BUREAU OF EQUIPMENT - DRAWING NO. 4-224-2 - DATED OCTOBER 8, 1997; LAST REVISED OCT. 8, 1997

OFFICE OF THE DIRECTOR OF MAINTENANCE
WOODBRIDGE, NEW JERSEY

DRAWING
SPP-4-224-2

PROCUREMENT NO.:

PRICE LINES:

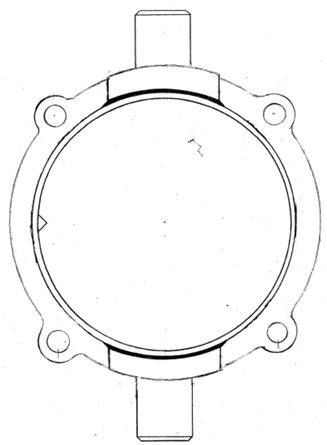

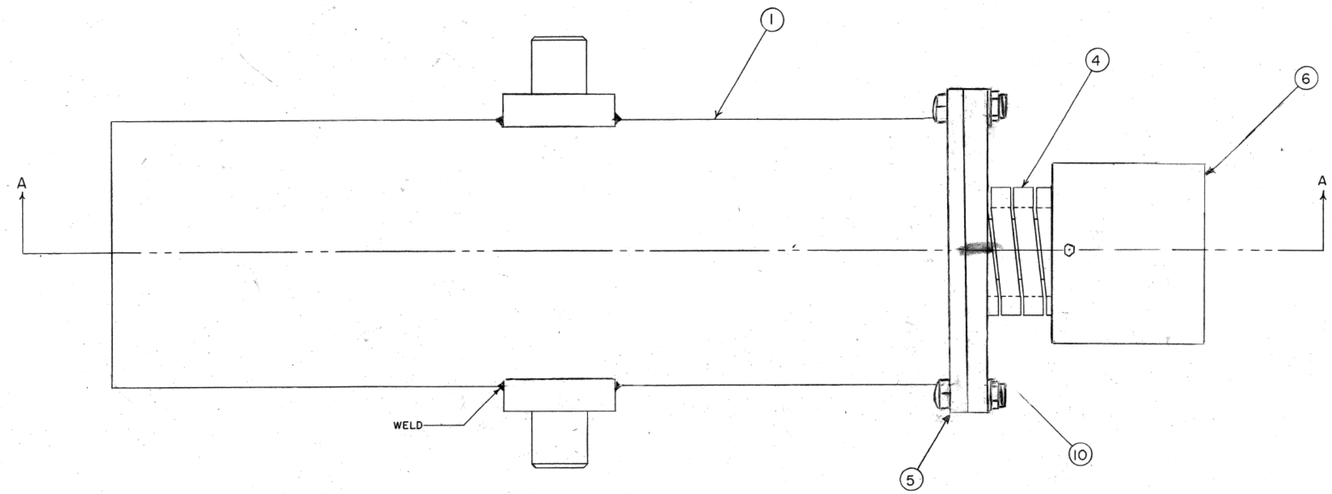

ITEM	NAME	QTY.	DWG. NO.
1	OUTSIDE TUBE ASSEMBLY	1	4-224-1, ITEM 1
2	TENSION ROD	1	4-224-1, ITEM 2
3	INSIDE TUBE ASSEMBLY	1	4-224-1, ITEM 3
4	RECOIL SPRING	1	4-224-1, ITEM 4
5	COVER PLATE	1	4-224-1, ITEM 5
6	PLOW COUPLING	1	4-224-1, ITEM 6
7	INSIDE SPRING	1	4-224-2
8	OUTSIDE SPRING	1	4-224-2
9	5/16 X 3" UNF BOLT, NUT & WASHER	1	STD.
10	5/8" X 18 UNF ELAS. STOP NUT & WASHER	4 EA.	STD.

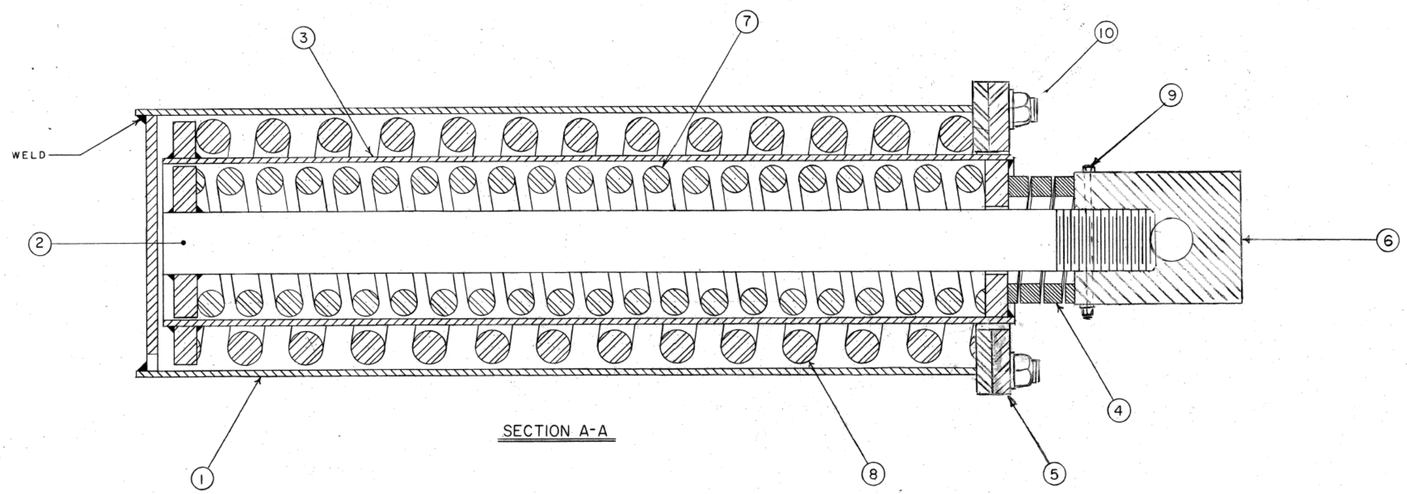

SECTION A-A

NOTES

1. SECTION LINING DOES NOT REPRESENT TYPE OF MATERIAL, ONLY CLARIFICATION BETWEEN PARTS.
2. MATERIAL SPECIFIED ON DWG. NO. 4-224-1 & 4-224-2.
3. DO NOT SCALE.
4. FASTEN PLOW COUPLING TO MOLDBOARD W/ 7/8", 9UNC BOLT, NUT, AND LOCKWASHER.

NEW JERSEY TURNPIKE AUTHORITY
MAINTENANCE DEPARTMENT
STANDARD SNOW PLOW DETAILS

TRIP SPRING ASSEMBLY

THIS DRAWING IS BASED UPON NEW JERSEY DEPARTMENT OF TRANSPORTATION - DIVISION OF CONSTRUCTION AND MAINTENANCE - BUREAU OF EQUIPMENT - DRAWING NO. 4-224-3 - DATED OCTOBER 8, 1997; LAST REVISED OCT. 8, 1997

OFFICE OF THE DIRECTOR OF MAINTENANCE
WOODBRIDGE, NEW JERSEY

DRAWING
SPP-4-224-3

PROCUREMENT NO.:

PRICE LINES:

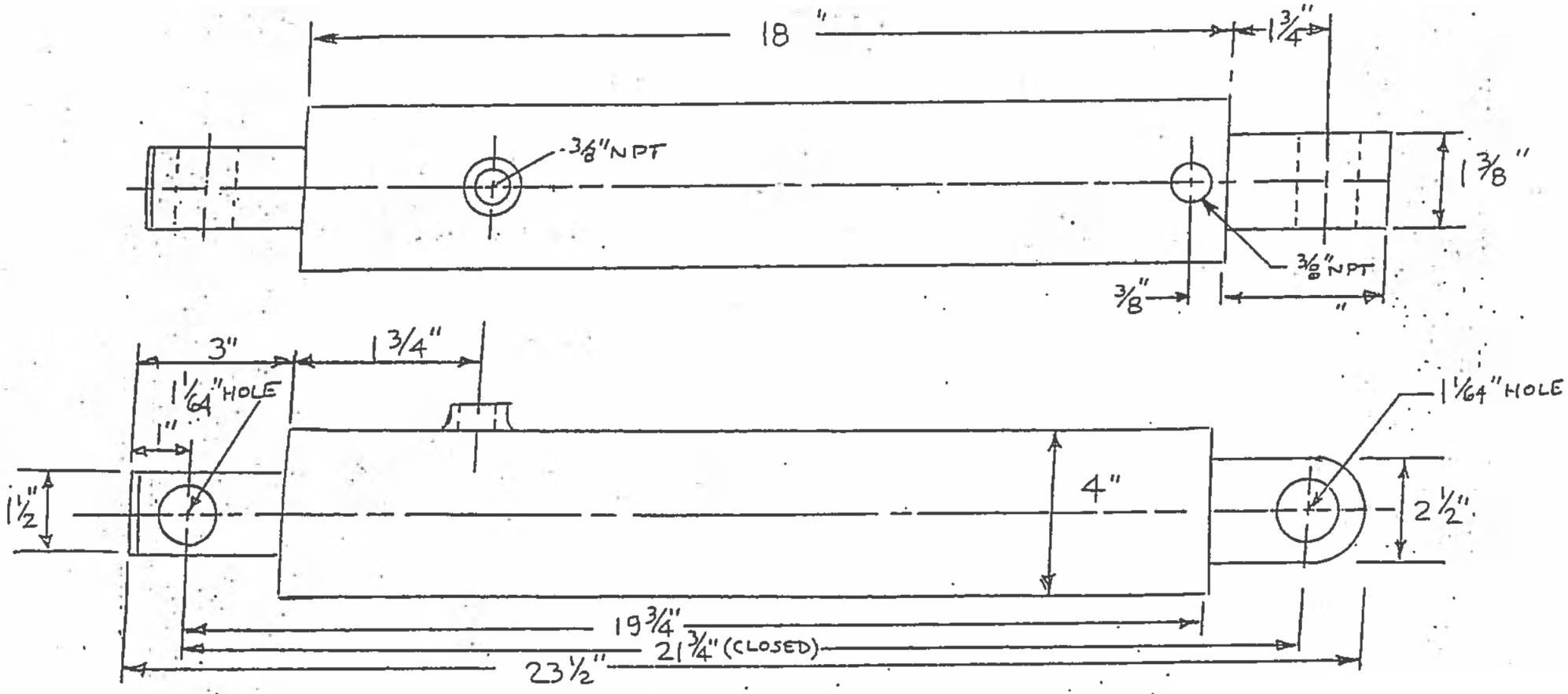

NOTES

1. ROD TO BE CHROME PLATED
2. MINIMUM WORKING PRESSURE - 2500 PSI
3. CYLINDER TO HAVE 12" STROKE AND 3 1/2" BORE

NEW JERSEY TURNPIKE AUTHORITY
MAINTENANCE DEPARTMENT
STANDARD SNOW PLOW DETAILS

4" DOUBLE ACTING CYLINDER

THIS DRAWING IS BASED UPON NEW JERSEY DEPARTMENT OF TRANSPORTATION - DIVISION OF CONSTRUCTION AND MAINTENANCE - BUREAU OF EQUIPMENT - DRAWING NO. 4-225 - DATED OCTOBER, 1997; LAST REVISED OCT., 1997

OFFICE OF THE DIRECTOR OF MAINTENANCE
WOODBRIDGE, NEW JERSEY

DRAWING
SPP-4-225

PROCUREMENT NO.:

PRICE LINES:

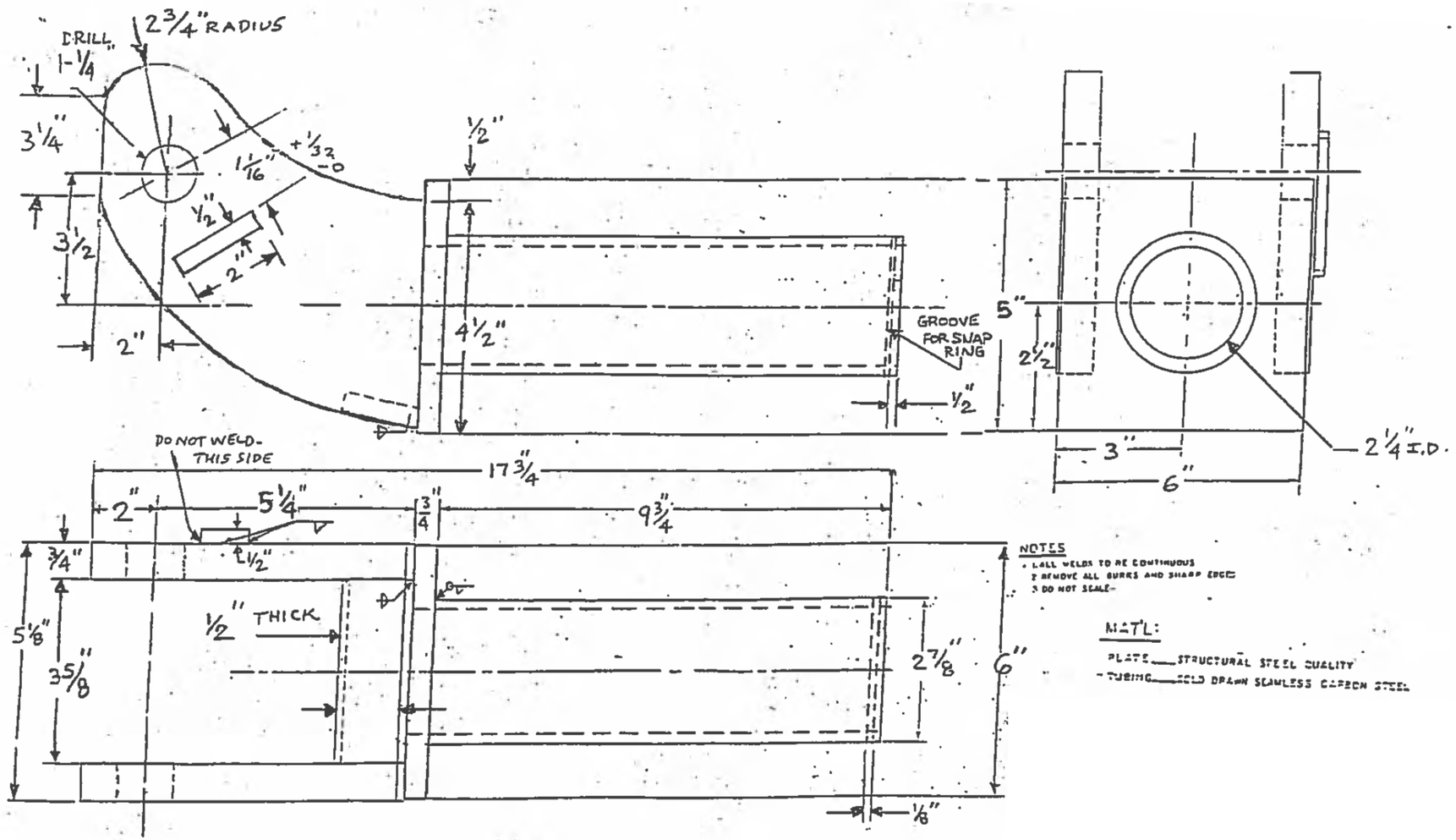

NOTES

1. ALL WELDS TO BE CONTINUOUS
2. REMOVE ALL BURRS AND SHARP EDGES
3. DO NOT SCALE

MAT'L:

PLATE ___ STRUCTURAL STEEL QUALITY
TUBING ___ COLD DRAWN SEAMLESS CARBON STEEL

NEW JERSEY TURNPIKE AUTHORITY
MAINTENANCE DEPARTMENT
STANDARD SNOW PLOW DETAILS

CASTER ASSEMBLY (FABRICATION)

THIS DRAWING IS BASED UPON NEW JERSEY DEPARTMENT OF TRANSPORTATION - DIVISION OF CONSTRUCTION AND MAINTENANCE - BUREAU OF EQUIPMENT - DRAWING NO. 4-226 - DATED OCTOBER 29, 1997; LAST REVISED OCT. 29, 1997

OFFICE OF THE DIRECTOR OF MAINTENANCE
WOODBRIDGE, NEW JERSEY

DRAWING
SPP-4-226

PROCUREMENT NO.:

PRICE LINES:

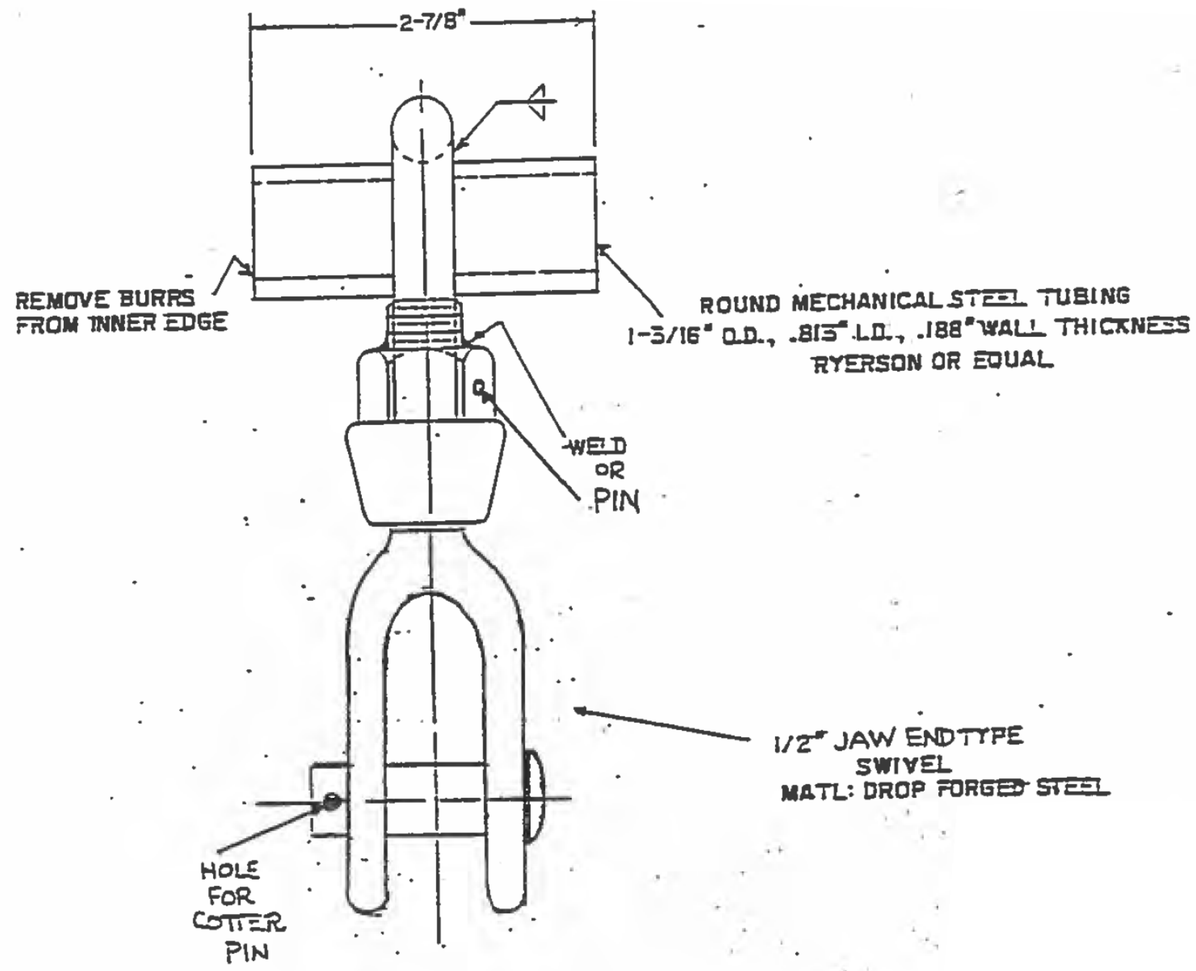

NEW JERSEY TURNPIKE AUTHORITY
MAINTENANCE DEPARTMENT
STANDARD SNOW PLOW DETAILS

PIPE WELDMENT

THIS DRAWING IS BASED UPON NEW JERSEY DEPARTMENT OF TRANSPORTATION - DIVISION OF CONSTRUCTION AND MAINTENANCE - BUREAU OF EQUIPMENT - DRAWING NO. 4-227 - DATED AUGUST 19, 1998; LAST REVISED AUG. 19, 1998

OFFICE OF THE DIRECTOR OF MAINTENANCE
WOODBRIDGE, NEW JERSEY

DRAWING
SPP-4-227

PROCUREMENT NO.:

PRICE LINES:

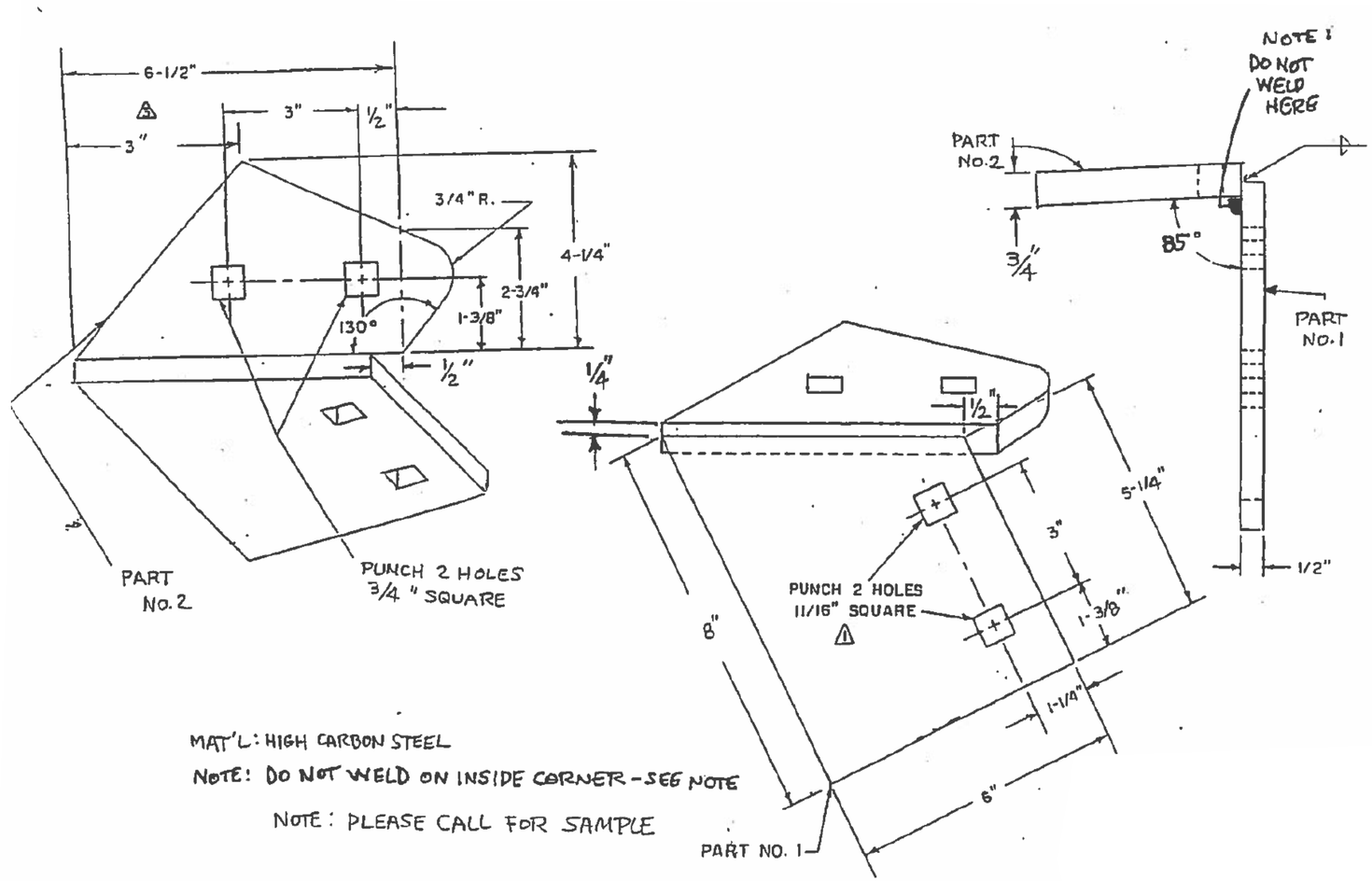

MAT'L: HIGH CARBON STEEL

NOTE: DO NOT WELD ON INSIDE CORNER - SEE NOTE

NOTE: PLEASE CALL FOR SAMPLE

NEW JERSEY TURNPIKE AUTHORITY
MAINTENANCE DEPARTMENT
STANDARD SNOW PLOW DETAILS

INNER NOSE PIECE FOR LEMBO PLOW

THIS DRAWING IS BASED UPON NEW JERSEY DEPARTMENT OF TRANSPORTATION - DIVISION OF CONSTRUCTION AND MAINTENANCE - BUREAU OF EQUIPMENT - DRAWING NO. 4-228 - DATED OCTOBER 29, 1998; LAST REVISED OCT. 29, 1998

OFFICE OF THE DIRECTOR OF MAINTENANCE
WOODBRIDGE, NEW JERSEY

DRAWING
SPP-4-228

PROCUREMENT NO.:

PRICE LINES:

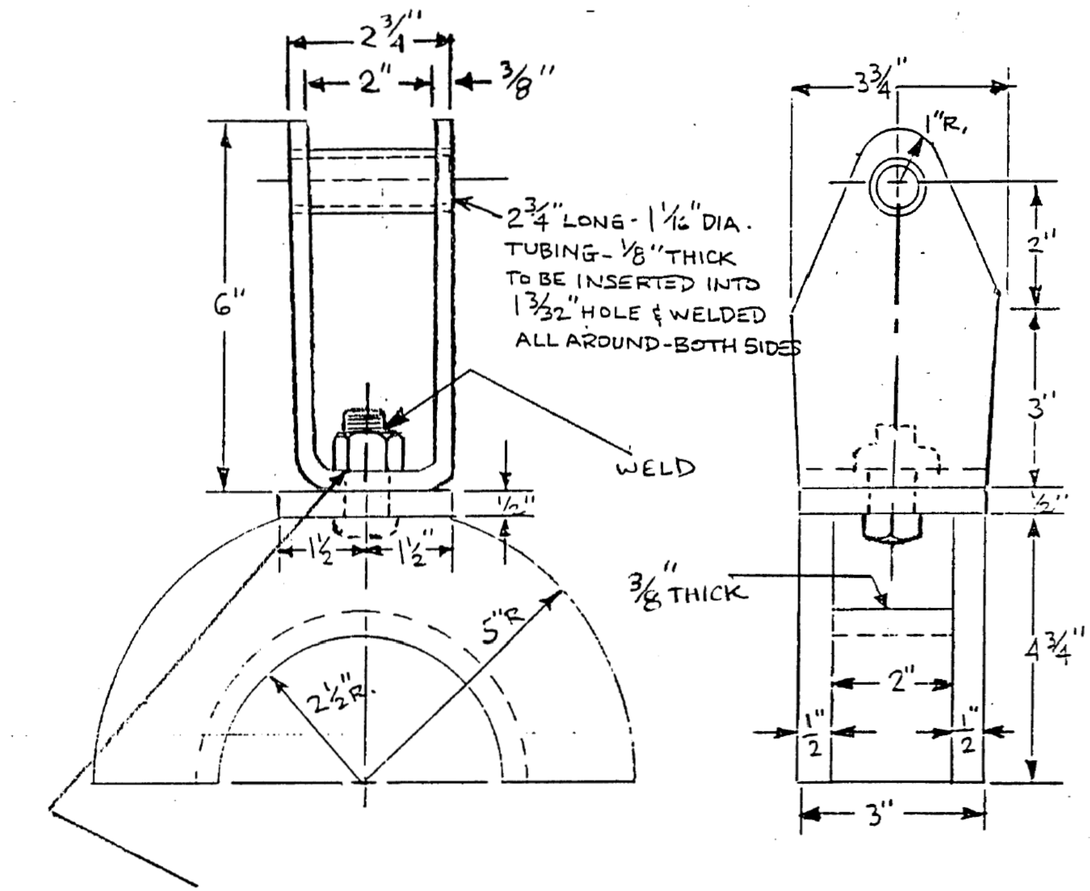

DRILL 1", 2 HOLES, FASTEN UPPER & LOWER SECTIONS TOGETHER WITH 1"x12UNFx 2" BOLT & NUT AND WELD

NEW JERSEY TURNPIKE AUTHORITY
MAINTENANCE DEPARTMENT
STANDARD SNOW PLOW DETAILS

SWIVEL CHAIN BLOCK - FOR P.R. PLOWS

THIS DRAWING IS BASED UPON NEW JERSEY DEPARTMENT OF TRANSPORTATION - DIVISION OF CONSTRUCTION AND MAINTENANCE - BUREAU OF EQUIPMENT - DRAWING NO. 4-230 - DATED OCTOBER 20, 2000; LAST REVISED OCT. 20, 2000

OFFICE OF THE DIRECTOR OF MAINTENANCE
WOODBRIDGE, NEW JERSEY

DRAWING
SPP-4-230

PROCUREMENT NO.:

PRICE LINES: