STATE	FEDERAL PROJECT NO.
N.J.	*

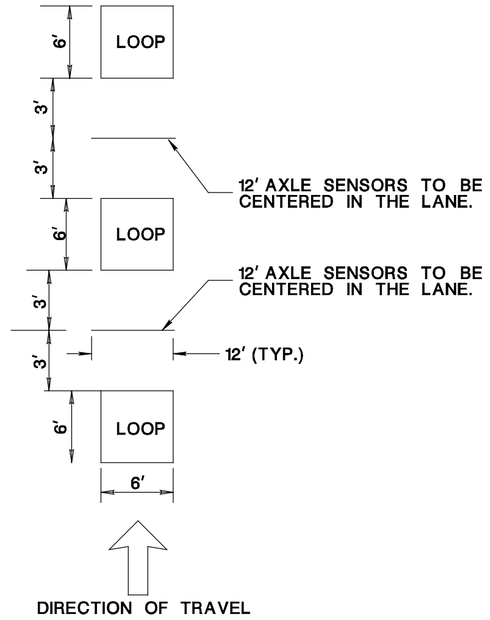

SENSOR LAYOUT
FOR WEIGH IN MOTION SITES

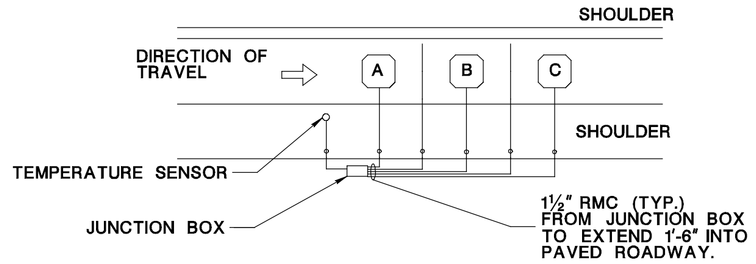

1 LANE

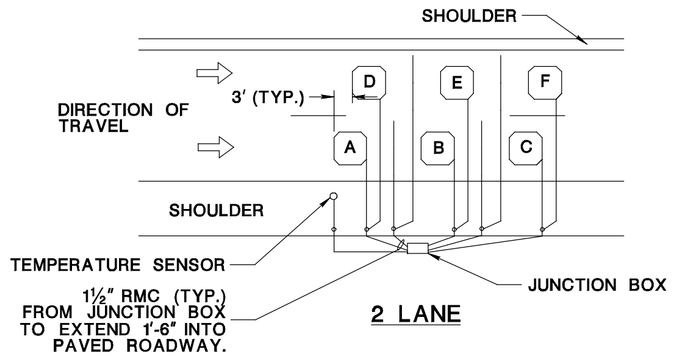

2 LANE

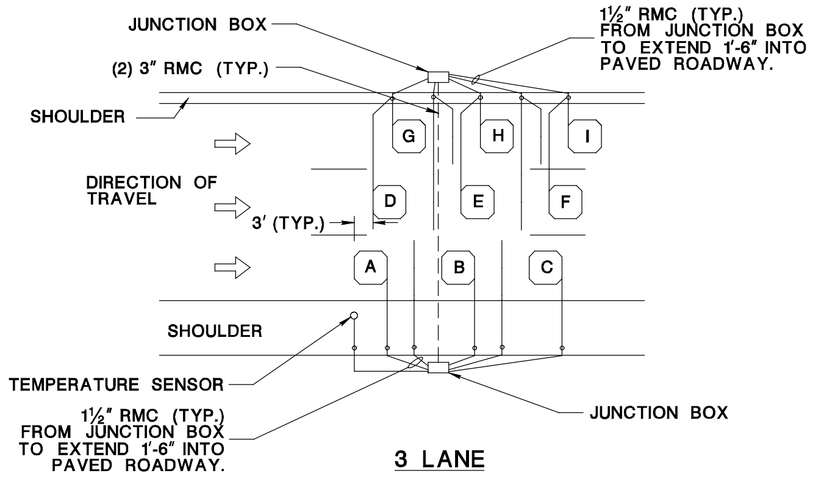

3 LANE

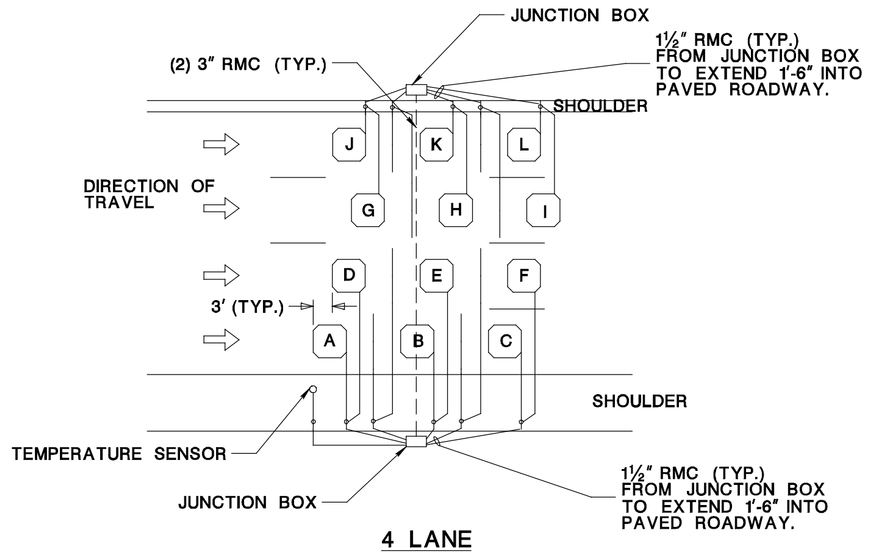

4 LANE

TYPICAL INSTALLATION - WIM ROADWAY DEVICES

IDENTIFICATION OF TRAFFIC MONITORING LOOPS

1. IDENTFY LOOPS WITH DURABLE IDENTIFICATION TAGS ON EACH LOOP LEAD PAIR. AFFIX LETTERS AS FOLLOWS:

   TAG THE LEADING LOOP AS LOOP "A" (FIRST LOOP IN THE DIRECTION OF TRAVEL OF THE RIGHT MOST LANE VARIOUSLY CALLED SLOW, SHOULDER, OR TRAVEL LANE), LOOP "B" AS THE TRAILING (SECOND) LOOP IN THE SAME LANE AND LOOP "C" AS THE THIRD LOOP IN THE SAME LANE.

   IDENTIFY LOOPS IN GROUPS, WITH THE LEADING LOOP IN THE DIRECTION OF TRAVEL ALWAYS IDENTIFIED BY THE FIRST LETTER IN THE GROUP. ASSIGN THE GROUPS BY LANE ACROSS ROADWAY, TOWARD THE DIVIDER OR MEDIAN.

   SIMILARLY DESIGNATE LOOPS IN THE OPPOSITE DIRECTION BY LANE STARTING IN THE RIGHT MOST LANE, USING THE NEXT GROUP OF LETTERS, THEN ACROSS THE LANES TO THE DIVIDER OR MEDIAN.

NOTES:

1. CLEAN SLOTS FOR WEIGHT AXLE SENSOR, LOOPS AND LEAD-IN CABLES (PRESSURE WASHED WITH WATER) AND DRY PRIOR TO THE APPLICATION OF GROUT.
2. STAGGER ADJACENT LANE SENSORS.
3. WHERE CONCRETE ROADWAY EXISTS, INSTALL LOOPS IN CONCRETE SURFACE PRIOR TO RESURFACING.
4. WHERE REFLECTORS AND CASTINGS AND RUMBLE STRIPS ARE TO BE INSTALLED, ADJUST THE DEPTH OF THE LOOP LEADS AND AXLE SENSOR CABLES ACCORDINGLY TO AVOID DAMAGE.
5. ENSURE GROUT CURES AND IS CAPABLE OF SUPPORTING VEHICULAR TRAFFIC WITHIN A MAXIMUM OF 60 MINUTES FROM START OF INSTALLATION.
6. INSTALL LOOPS AFTER MILLING PROCESS, IF PERFORMED, AND PRIOR TO THE INSTALLATION OF THE FINAL OVERLAY.
7. SENSOR SPACING SHOWN IS TYPICAL SPACING REQUIREMENT. ACTUAL SENSOR SPACING MAY BE ALTERED TO SUIT SITE CONDTIONS AND MANUFACTURER'S RECOMMENDATION.
8. USE THIN WALLED PLASTIC TUBING TO CONTAIN THE SENSOR LEAD WIRE. INSTALL THE TUBING FROM THE END OF THE SENSOR SLOT TO A POINT 6-12 INCHES INSIDE THE JUNCTION BOX OR CONDUIT END.
9. INSTALL PIEZO SENSORS A MINIMUM OF 2 FEET FROM CRACKS, JOINTS, OR SAWCUTS WHEN POSSIBLE.
10. PROVIDE EACH SENSOR WITH A SUFFICIENT LENGTH OF SHIELDED LEAD CABLE FOR TERMINATION AT THE CONTROLLER IN THE CABINET WITHOUT SPLICING.
11. INSTALL TEMPERATURE SENSOR IN SHOULDER PER MANUFACTURER'S RECOMMENDATION. SUPPLY ONE TEMPERATURE SENSOR PER WIM COMPUTER.
12. WHEN ENCAPSULATION MATERIAL IS FULLY CURED, GRIND FLUSH WITH ROAD SURFACE USING AN ANGLE GRINDER OR BLET SANDER.

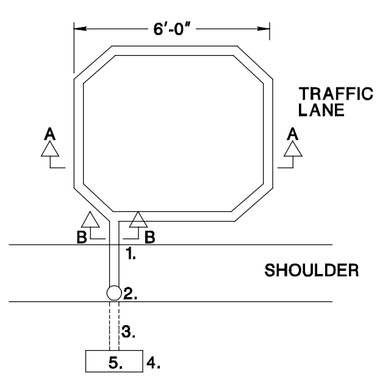

INDUCTIVE LOOP DETAILS

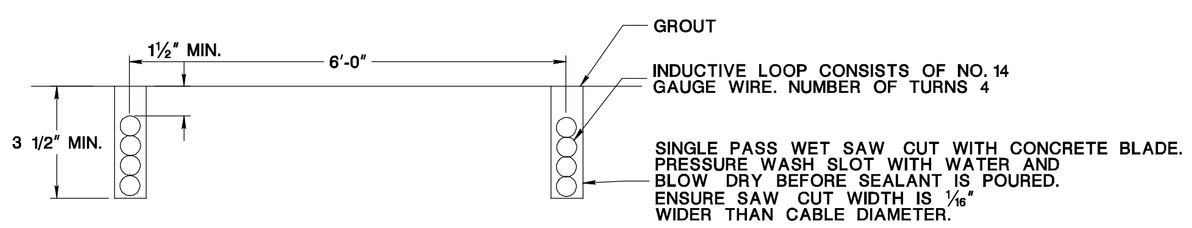

SECTION A-A

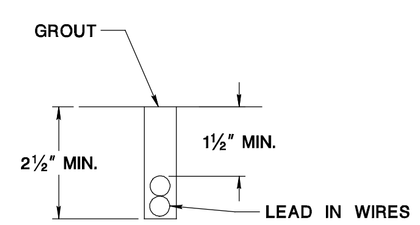

SECTION B-B

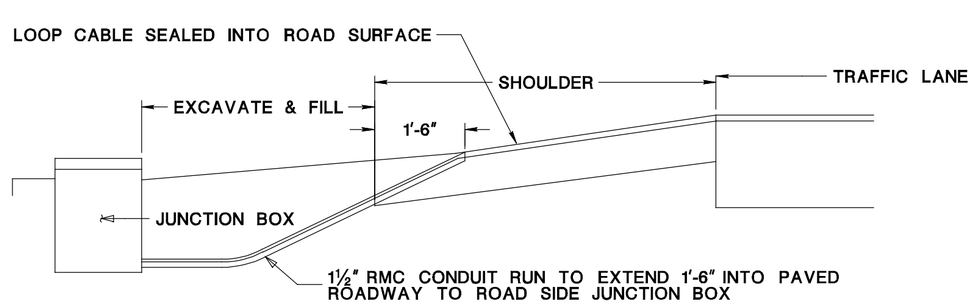

LOOP CABLE ROUTING DETAILS

NOTES:

1. LEAD WIRES TWISTED MINIMUM OF 3 TURNS PER FOOT.
2. DRILL HOLE 1'-6" FROM EDGE OF SHOULDER TO INSTALL RMC CONDUIT.
3. 1½" RMC CONDUIT RUN BETWEEN JUNCTION BOX AND SHOULDER SURFACE.
4. INSTALL JUNCTION BOX AT ROAD EDGE FOR CONNECTIONS TO FEEDER CABLE.
5. MAKE ALL CONNECTIONS BETWEEN LEAD WIRES AND LOOP DETECTOR CARVE IN THE JUNCTION BOX.

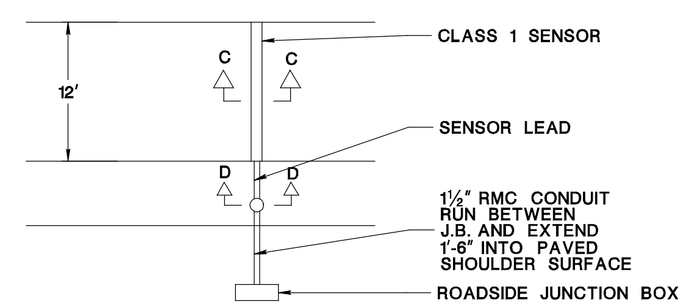

PIEZO TYPE AXLE SENSOR DETAILS

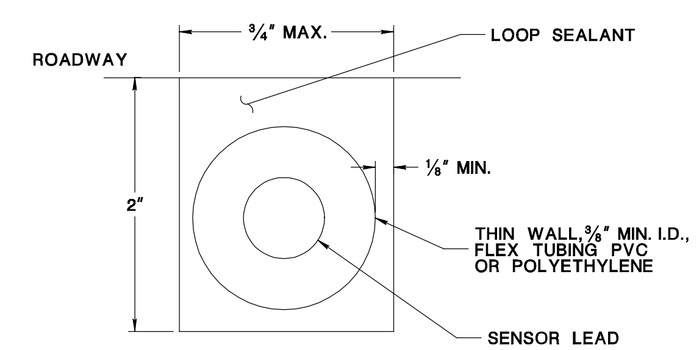

SECTION D-D

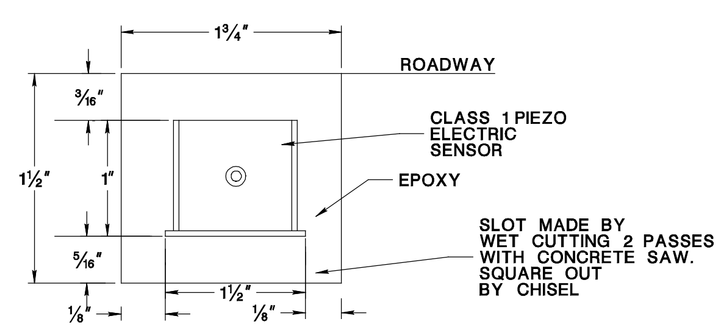

SECTION C-C

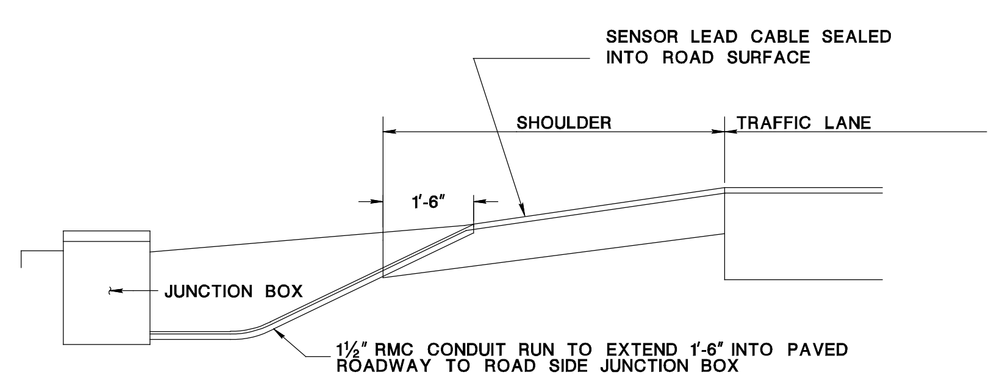

AXLE SENSOR CABLE ROUTING DETAILS

ATTACHMENT 4

ITS-704-XX

NEW JERSEY DEPARTMENT OF TRANSPORTATION

ITS DETAILS

WEIGH IN MOTION SYSTEM

ROADWAY DEVICES

SCALE:
NOT TO SCALE

REVISION DESCRIPTION	BY	CHECKED	DATE
REV. 8/20/09			
REV. 9/16/09			
BDC07D-03			

REFERENCE

ID = TPORARB file = pen table = \\njdotprjwa\v8system\nj\dotws\projects\NJDOTEng\plot\TBLs\Non-Roadway\elec.tbl date = 15-OCT-2010 12:48