BUILDING 1: Main Laboratory Building

1. DESCRIPTION:

Building 1 is a 23,400 square-foot, three (3) story building

- , constructed of concrete block with a brick veneer exterior. This building is actually the main administrative facility. The first floor is composed mainly of office spaces, with a boiler room, walk in freezers and one lab area. The second and third floors are dedicated for office space and storage. Each floor has men and women's restrooms. Building 1 was constructed in 1960. The following information was identified during the survey and from the analysis of the samples taken:

  Twenty Four homogeneous areas were identified during the initial survey.
  One homogeneous areas were assumed to contain asbestos.
  Twenty Three of the homogeneous areas were suspected to contain asbestos and sampled to confirm.
  Five of the suspected homogeneous areas were confirmed to contain asbestos.
  Eighteen of the suspected homogenous areas did not contain asbestos.

  2. FINDINGS:

  Twenty Three homogeneous areas with suspected ACM were identified. One Hundred Eight samples were collected and analyzed. Sample results are summarized in the Laboratory Test Results table in this section. Friable asbestos was found in Four of the homogeneous areas. See ACAD drawings for sample locations.

  Confirmed ACM. The following homogeneous areas sampled were confirmed to contain asbestos:

  H-2: MISC, FLOOR TILE, 9" x 9"
  H-4: MISC, FLOOR TILE, 9" x 9"
  H-8: MISC, CEILING TILE, W/O MASTIC, Acoustical
  H-19: MISC, FLOOR TILE, 9" x 9"
  H-23: TSI, Hard Gray Shell, 4 x 4, Gray/Brown

  Asbestos Free. Asbestos was not detected in the following homogeneous areas:

  H-1: SURFACING, TEXTURE COAT, Insulation
  H-3: MISC, FLOOR TILE, 12" x 12"

H-5: MISC, SHEET FLOORING, Vinyl
H-6: MISC, FLOOR TILE, 12" x 12"
H-7: TSI, Batts, Paper Backing
H-9: MISC, CEILING TILE, 24 x 24, White
H-10: MISC, CEILING TILE, W/O MASTIC, 12 x 12, White
H-11: MISC, CEILING TILE, W/O MASTIC, 12 x 12, Beige/Gray
H-12: MISC, GROUT, TILE
H-13: MISC, SHEETROCK, PAINTED
H-14: MISC, ACOUSTICAL TILE, W/O MASTIC, 12 x 12, White
H-15: MISC, ACOUSTICAL TILE, W/O MASTIC, 12 x 12, White
H-16: MISC, SHEET FLOORING, Vinyl, Dark Gray
H-17: MISC, SHEET FLOORING, Vinyl, Lt. Gray
H-18: MISC, PLASTER, White
H-20: MISC, CEILING TILE, Deep cut pattern, 24 x 24, White
H-21: MISC, FLOOR TILE MASTIC ONLY, Black
H-22: MISC, CEILING TILE, 12 x 12, Brown

Assumed ACM. The following homogeneous areas were assumed to contain asbestos:

H-24: MISC, Counter Top, Black

3. OBSERVATIONS:

Building is in good condition. Floor tile which covers both the 2nd and 3rd floors is in good condition and if not removed, should be maintained through an O and M program. Homogeneous material H-23 that is a part of the roof structure. Caution should be taken when penetrating this material as this will cause an asbestos spill.

4. RECOMMENDED ABATEMENT ACTIONS:

- Note: Actions listed as “Remove/O&M” mean that if the homogeneous material is not removed it should be maintained through an O and M plan.

Recommended actions for the following homogeneous areas:

H-2: MISC, FLOOR TILE, white: Remove/O&M
H-4: MISC, FLOOR TILE, Gray: Remove/O&M
H-8: MISC, CEILING TILE, Acoustical, White: Remove
H-19: MISC, FLOOR TILE, Black/White: Remove/O&M
H-23: TSI, Hard Gray Shell, 4 x 4, Gray/Brown: O&M
H-24: MISC, COUNTER TOP, Black

5. RECOMMENDATIONS FOR OPERATIONS AND MAINTENANCE:

The materials listed below should be maintained following the guidelines in the O and M Plan during regular maintenance and small-scale repair activities. No O and M Plan is provided with this inspection report.
MISC CEILING TILE

H-8 (CEILING TILE, 2 sq. ft., White) is located in ROOMS 105, 114, E100.

MISC FLOOR TILE.

H-4 (FLOOR TILE, 1.5 sq. ft., Gray) is located in ROOMS 103, 106.

H-2 (FLOOR TILE, 1000 sq. ft., white) is located in ROOM 106.

H-19 (FLOOR TILE, 7348 sq. ft., Black/White) is located in 201A, 201B, 201C, 206, 216A, 218, 219, 309, 310D, 311B, 312C, 319B, H300.

TSI

H-23 (Hard Gray Shell, 4 x 4, Gray/Brown) is located in the overhead of ROOMS 302, 308, 311, 313, 319, H300, JC300. **The hard gray shell was found to contain asbestos.** This TSI is essentially a part of the roof structure. Precautions should be taken when penetrations are made through this material.

BUILDING 2:

- Maintenance/Aquarium Building

1. DESCRIPTION:

Building 2 is a 28,680 square-foot, two story building with a basement, and is constructed of concrete block and brick veneer. The first floor is divided into two distinct buildings a maintenance shop and an aquarium. The maintenance shop contains a boiler room, storage areas, dive locker and office space. The aquarium side contains and Exhibition area for Public access and a work area that contains three office spaces. The Public aquarium also has a conference room and two restrooms. The basement area is used for storage and mechanical equipment for the aquarium. The second story over the maintenance shop contains office spaces and a library. The second story over the aquarium was added in the 1980's. It contains office spaces and two restrooms. The year built was 1961. The following information was identified during the survey and from the analysis of the samples taken:

Twenty -One homogeneous areas were identified during the initial survey.
One homogeneous area was assumed to contain asbestos.
Twenty of the homogeneous areas were suspected to contain asbestos and sampled to confirm.
Five of the suspected homogeneous areas were confirmed to contain asbestos.
Fifteen of the suspected homogenous areas did not contain asbestos.

2. FINDINGS:

Twenty homogeneous areas with suspected ACM were identified. Ninety Two samples were collected and analyzed. Sample results are summarized in the Laboratory Test Results table in this section. Friable asbestos was found in Five of the homogeneous areas. See ACAD drawings for sample locations.

Confirmed ACM. The following homogeneous areas sampled were confirmed to contain asbestos:

H-1: TSI, FITTING, CLOTH WRAPPED, White
H-2: TSI, PIPE, CLOTH WRAPPED, White
H-4: TSI, PIPE, Paper Wrap, Brown Paper Wrapping
H-10: MISC, FLOOR TILE, 9" x 9", White/Brown
H-11: MISC, FLOOR TILE, 12" x 12", W/Black Mastic, Lt. Green

Asbestos Free. Asbestos was not detected in the following homogeneous areas:

H-3: TSI, PIPE, AIRCELL, Brown
H-5: TSI, WRAP, Fiberglass, White/Yellow
H-6: MISC, CEILING TILE, Drop Type, 24 x 24, White

H-7: MISC, CEILING TILE, Drop Type, 24 x 36, White
H-8: MISC, CEILING TILE, Drop Type, 24 x 48, White
H-9: MISC, CEILING TILE, Drop Type, Deep Cuts, 24 x 48, White
H-12: MISC, FLOOR TILE, 12" x 12", Dk Green
H-13: MISC, FLOOR TILE, 12" x 12", Brown
H-14: MISC, Vinyl Baseboard, Green
H-15: MISC, SHEET FLOORING, Vinyl, Purple
H-16: MISC, FILLER, Floor Filler, White
H-17: MISC, CAULKING, Gray
H-18: MISC, FLOOR TILE, 12" x 12", Rough Finish, Black
H-19: MISC, FLOOR TILE, 12" x 12", Lt. Brown
H-21: MISC, GASKET, Boiler gasket, Brown

Assumed ACM. The following homogeneous areas were assumed to contain asbestos:

H-20: MISC, COUNTER TOP, BROWN.

3. OBSERVATIONS:

The friable asbestos that needs the most attention is in the public restrooms of the aquarium and the basement area of the aquarium. The exterior of the building, including the roof, revealed no suspect asbestos containing material.

4. RECOMMENDED ABATEMENT ACTIONS:

Recommended actions for the following homogeneous areas:

H-1: TSI, FITTING, Various, White: Remove/Repair/ O&M
H-2: TSI, PIPE, Various, White: Remove/Repair/ O&M
H-4: TSI, PIPE, Brown Paper Wrapping, Brown/White: Remove/Repair/ O&M
H-10: MISC, FLOOR TILE, White/Brown: Remove/O&M
H-11: MISC, FLOOR TILE, W/Black Mastic, Lt. Green: Remove/O&M
H-20: MISC, COUNTER TOP, Brown: O&M

5. RECOMMENDATIONS FOR OPERATIONS AND MAINTENANCE:

The materials listed below should be maintained following the guidelines in a O and M Plan during regular maintenance and small-scale repair activities. No O and M plan was developed for this inspection report.

MISC COUNTER TOP
H-20 (COUNTER TOP, Brown)

TSI - FITTING

H-1 (FITTING, Various, White) is located in ROOMS 105, 108, 115, 119, 120, and Aquarium Basement (Room 104).

MISC - FLOOR TILE

H-11 (FLOOR TILE, 1107 sq. ft., Lt. Green) is located in ROOM 213.

H-10 (FLOOR TILE, 4100 sq. ft., White/Brown) is located in ROOMS 206, 206, 207, 209, H200.

TSI - PIPE

H-2 (PIPE, Various, White) is located in ROOMS 105, 109, 110, 115, 119, 120.

H-4 (PIPE, Various, Brown/White) is located in ROOMS 102, 115, Aquarium Basement (Room 104).

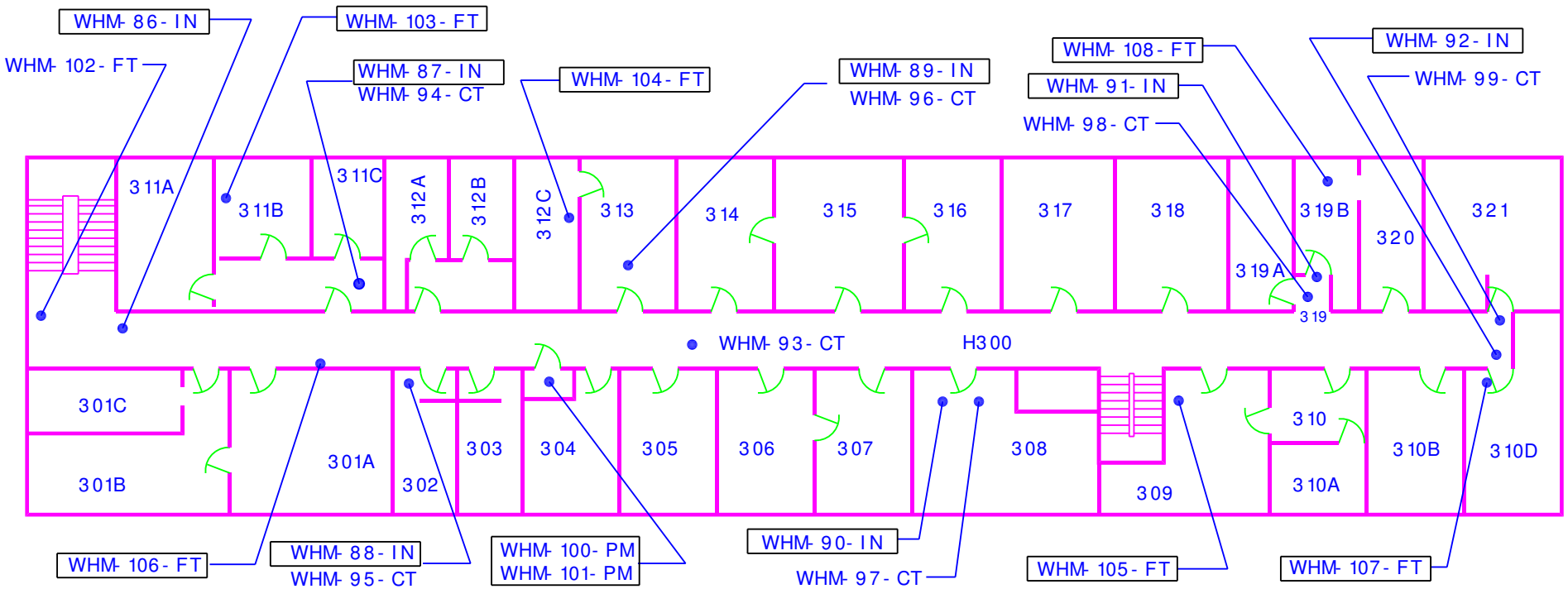

THIRD FLOOR PLAN

NOTE: SAMPLE NUMBERS SHOWN ENCASED
XXX-XX-XX CONTAIN ASBESTOS

ENVIRONMENTAL DETACHMENT CHARLESTON
1899 NORTH HOBSON AVENUE – BUILDING 30
NORTH CHARLESTON, SOUTH CAROLINA 29405-2106

NMFS SCIENCE CENTER-WOODS HOLE, MA.
BUILDING 1-MAIN LABORATORY BUILDING

SIZE	DATE	PREPARED BY:	REV
	1-15-98	J. W. CROCKER	

SCALE: NONE | SHEET 3 OF 3

FIRST FLOOR

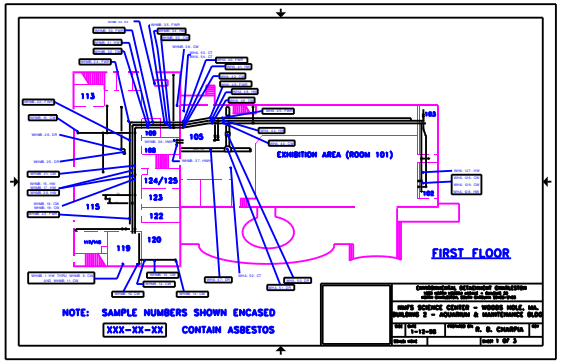

BASEMENT

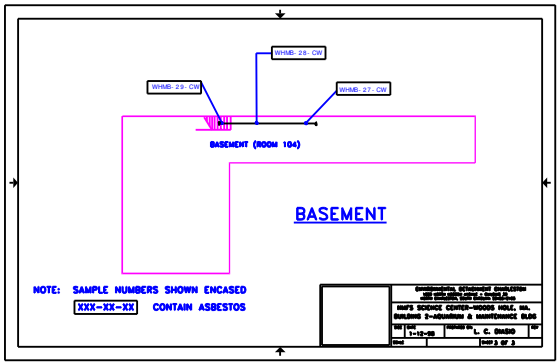

SECOND FLOOR

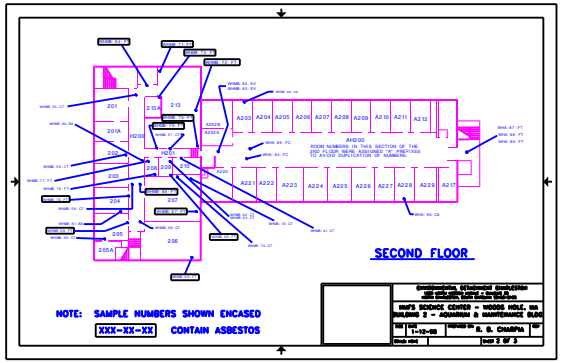

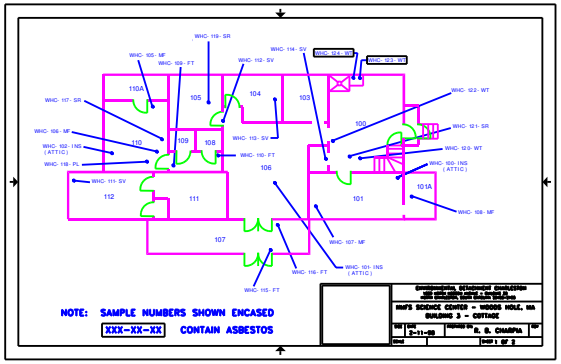

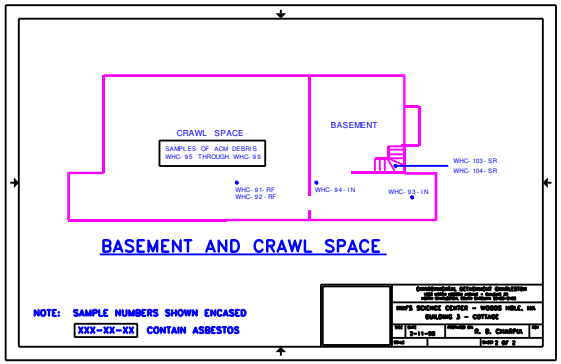

South Trailer No. 1: ACM was found to be present in the coating on the seams of the roof. ACM in NON friable and it's potential for disturbance is low. Recommend no action be taken. If roof work is required on ST No.1 recommend encapsulation with roofing tar. No cost for removal is included in the estimate. (completed)

South Trailer No. 2 and 3: Floor tile in both modular units are ASSUMED ACM. All floor tile is in excellent shape and it's potential for disturbance is very low. No action recommended and no cost for removal is included in the estimate.

No other ACM was found in the remaining buildings at the Narragansett location.

Woods Hole, MA.

Two estimates were developed for Woods Hole. One (1) includes the removal of ALL ACM, including floor tile and the other was developed with ALL ACM, EXCEPT floor tile being removed. Please note the differences. ACM was found in the Main Laboratory Building, Maintenance Building and the cottage.

Main Laboratory Building: ACM found was floor tile and acoustical ceiling tile. The floor tile is in good condition, except for room 17 west on the first floor in which less than 10% of the tile is damaged. If the floor tile is not removed or encapsulated, recommend repair of room 17 west. The removal of the floor tile from this building would be a major project requiring the relocation of all personnel and equipment from those areas that contain the floor tile. The floor tile would be removed using heat. The mastic would be chemically removed. The acoustical ceiling tile is found mainly in the entrance way and in some various location throughout the building. The ceiling tile in the entrance way is in good condition, with a low potential for disturbance. Removal can be accomplished by establishing critical barriers and a regulated area. Lose ceiling tile will be treated as spill material, locked down using special chemicals and removed.

Maintenance/Aquarium Building:

The majority of ACM in this building is thermal systems insulation (TSI). The existing TSI is in fair condition, but has a high potential for disturbance not only by maintenance personnel, but also personnel in the Aquarium work area. Removal of all TSI, can be accomplished using glovebag methods. Relocation of all personnel in the aquarium work area will be required as well as isolation of the marine life in that area. Areas of immediate concern are, boiler room , basement area of aquarium and the public restrooms in the aquarium in which friable ACM was found. Floor tile on the second floor of the maintenance building is ASSUMED ACM. If the floor tile and mastic are not removed or encapsulated, recommend repair of areas in the restrooms and along the hall way.

Cottage: ACM analytically identified was located in the crawl space. Floor tile is ASSUMED ACM. Cleaning of the crawl space is a labor intensive project and will be accomplished by establishing critical barriers and manually picking and digging up the ACM. Floor tile is in good

condition and it's potential for disturbance is low. If ACM extends deeper than 3 inches, recommend encapsulation of crawl space using concrete.

No other buildings at the Woods Hole site were found to contain any ACM.

Milford, Conn.

Two estimates were developed for Milford. One (1) includes the removal of ALL ACM, including floor tile and the other was developed with ALL ACM, EXCEPT floor tile being removed. Please note the differences. ACM was found in Building Nos. 1, 2, 3 and 10.

Building 1: ACM included in the estimate for removal is ceiling tile located on the second floor and TSI located throughout the building. Ceiling tile would be removed by isolating the second floor, which would require relocation of all personnel. TSI can be removed using glove bag methods and isolating small areas when possible.

Building 2: ACM included TSI, Miscellaneous felt type paper in the attic space, and roofing material. Material ASSUMED to be ACM are floor tiles and lab counter top. TSI is in good condition but it's potential for disturbance is high. It can be removed using glove bags and small area isolation. The felt type paper found in the attic is in poor condition and should be removed. This area can be cleaned up as a spill, which will relax some of the controls required for a higher level of contamination. The floor tile, if not removed or encapsulated should be placed in an O&M program. Counter tops should be replaced only when damaged. Estimates have been developed for both options.

Building 3: ACM included transite board under plywood flooring and extending 3 ft up the walls on the second floor. ASSUMED ACM was floor tile. Recommend removal of transite board. It's potential for disturbance is high. It can be removed by constructing critical barriers and establishing a regulated area. Relocation of personnel and equipment will be required. Floor tile if not removed or encapsulated should be placed in an O&M program.

Building 10: ACM identified is ASSUMED and is floor tile. If not removed or encapsulated should be placed in an O&M program.