KP701 STANDARD TWIN PACKAGED BLOWER

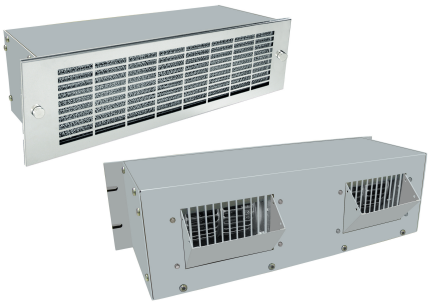

Find additional information on this model at kooltronic.com, or use the Technical Documents QR code below.

Technical Documents

STANDARD FEATURES

330 CFM Capacity
Attractive 19-inch [482.6mm] stainless steel grilles
Dual inlet quadruplex blower design for maximum airflow
Exhaust guards included
Filter
Heavy-gauge steel shell with EIA-notched flanges and baked powder finish
Inlet air cools motor for longer life
Three foot [0.9m] (minimum) 3-wire power cord
UL/CSA ball-bearing motors

ACCESSORIES AND OPTIONS

Adapters
Airflow Switch
Automatic Speed Control
EMI/RFI Shielding
Filter Recoating Adhesive
Grille Assemblies for replacement
Other voltages and frequencies
Replacement Filters
Special external paint finishes
Special line cord or connectors

PERFORMANCE GRAPH

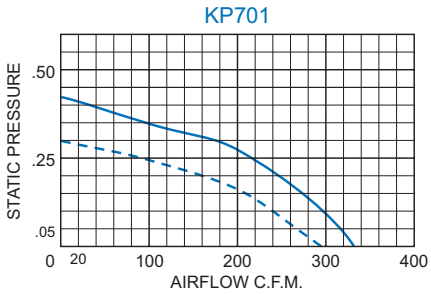

Airflow vs. static pressure curves are shown for 60 Hz (solid line) and 50 Hz (broken line) inputs. Static pressure is in inches of water.

TECHNICAL DATA*

Model	Volts	CFM @ 0" S.P.	Cutoff S.P.	RPM Nominal	Amps Run.	Amps L.R.	Watts	Approximate Weight Lbs.	Approximate Weight Kg.
KP701A	115	330	0.42	1600	1.1	1.6	85	18	8.2
KP701B	115	330	0.42	1600	1.1	1.6	85	18	8.2
KP701C	115	330	0.42	1600	1.1	1.6	85	18	8.2
KP701D	115	330	0.42	1600	1.1	1.6	85	18	8.2

* 115V, 60 Hz operation.

DIMENSIONS AND DISCHARGE LOCATIONS inches [metric]

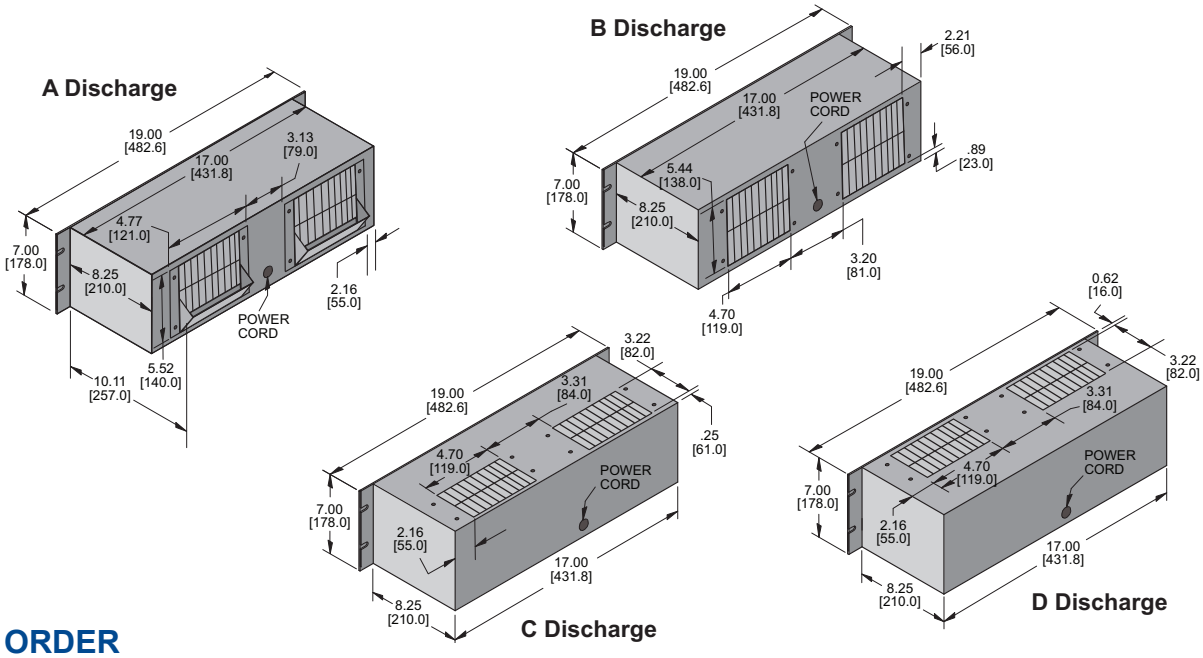

HOW TO ORDER

Specify model number, adding discharge suffix A, B, C or D. Example: KP701A. For 230 VAC operation, add a 2 after the K. Example: K2P701A.

Dimensions, inches [mm], are for reference only and subject to change.

kp701.qxd (8/1/23) (CDR: 20498)

Kooltronic, Inc., 30 Pennington-Hopewell Road, P.O. Box 240, Pennington, NJ 08534-0240
Tel: (609) 466-3400 Fax: (609) 466-1114 kooltronic.com sales@kooltronic.com

KP701 STANDARD TWIN PACKAGED BLOWER

DESCRIPTION

Standard Twin Packaged Blowers are the most popular KOOLTRONIC Packaged Blower. These blowers achieve exceptional performance through use of the largest possible blower housings and wheels. Each contains a quadruplex centrifugal blower powered by a single precision ball-bearing motor.

These widely-used ***Standard Twin Packaged Blowers*** deliver air from more than 50% of their 17" [431.8mm] width, while conventional blowers deliver air from only about 30%.

Internal neoprene isolation mounts reduce transmission of vibration and AC hum to the enclosure. Long service life and trouble-free performance are assured through the use of precision ball-bearing motors in all models and by the dual inlet quadruplex design, which uses intake air to cool the motor.

STANDARD FEATURES

RUGGED CONSTRUCTION: Precision-engineered heavy-gauge steel construction insures blower will stand up under tough industrial applications. EIA-notched flanges extend 17" [431.8mm] blower cabinet to 19" [482.6mm] panel width.

BAKED POWDER FINISH: Durable, baked-on gray powder finish is standard. Other finishes are available.

PRECISION BALL-BEARING MOTORS: All motors, whether permanent split capacitor or shaded pole, are UL/CSA Recognized, and include automatic-reset thermal overload protection. Designed for low temperature rise, KOOLTRONIC motors are also cooled by the blowers' intake air, for maximum motor life. All motors meet Federal Specification CC-M-1807A, and include double-sealed or double-shielded precision ball bearings which meet Federal Specification FF-B-171A. Special permanent lubricants perform over a broad temperature range: -20ºF (-28.9ºC) to 250ºF (121.1ºC). Consult KOOLTRONIC for motors designed to meet military or extreme environmental specifications.

POWER: 115 VAC or 230 VAC, 50/60 Hz is standard. For multi-phase power, other voltages and frequencies or brushless DC applications, consult KOOLTRONIC.

GRILLE: All units include attractive 19" [482.6mm] wide stainless steel grilles with knurled captive fasteners for easy removal. Grille area is 65% open and complies with OSHA and UL safety standards.

FILTERS: The filters included with all packaged blowers consist of a multi-layer grid of sturdy, corrugated aluminum in a one-piece aluminum frame. Adhesive coated to trap particulate matter, they are easy to remove, wash and treat with KOOLTRONIC A-16, an adhesive-rejuvenating spray. Filters must be kept free of accumulations, to prevent reduction or loss of performance and/or damage to equipment.

POWER CORD: All 115 VAC, 50/60 Hz units are supplied with a minimum of 36 " [914.4mm] three-wire cord with molded plug included, internally grounded and securely locked to the case by a strain relief bushing. 230 VAC, 50/60 Hz blowers are supplied without a plug. Special lengths and/or plugs are available.

EXHAUST GUARDS: Included on all packaged blowers.

ACCESSORIES AND OPTIONS*

ADAPTERS: (Set of two) These extend the width of any 19" [482.6mm] KOOLTRONIC Packaged Blower to permit mounting in a cabinet designed for 24" [609.6mm] units. The EIA-notched adapters are covered by a plate of mirror-finish stainless steel to match KOOLTRONIC Standard Grilles.These adapters are non-structural. Therefore, Packaged Blowers must be supported at the rear, due to their weight.

Models

Mirror Finish	Height Inches [metric]
KA24-7M	7.00 [177.8]

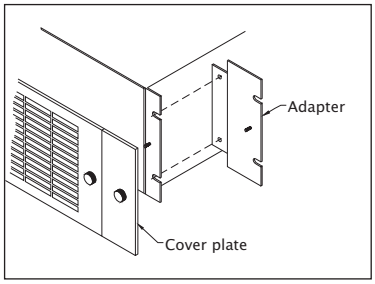

AIRFLOW SWITCH: Protects equipment against damage caused by loss of cooling airflow by activating an alarm or turning off power. The switch can be mounted on any suitable surface which allows the stainless steel air vane to be placed in the critical airstream. This switch is a single-pole double-throw type, with normally open and normally closed contacts. To order integrated airflow switch add -XX10 to model number. To order as external accessory, see Kooltronic website.

AUTOMATIC SPEED CONTROL: The Kooltronic Fan and Blower Automatic Speed Control (Part Number KSC100) is a solid state “smart” controller packaged in a NEMA 1 type enclosure for remote mounting. The allowable input power supply range is 95 to 250 Volts, 47 to 63 Hz. It is furnished standard with an IEC 320 connector, a power supply fuse and a temperature sensor. Additional temperature sensors are optional. Power cord is not provided.

The controller will operate single or multiple fans or blowers of compatible voltage and frequency up to a combined load of 6 Amps. The controller may be operated by either a control voltage signal of 0 to 10 VDC, a control current signal of 0 to 20 mA or one to three temperature sensors. With multiple temperature sensors the controller will respond to the highest sensed temperature.

The control circuit board is furnished with a terminal strip for field connecting the sensor and fan wires. A pressure type strain relief connector is furnished in the enclosure. If required by installation or by code, this connector can be replaced with a 1/2-inch [12.7mm] trade size conduit connector.

A wide variety of control logic options can be field programmed into the controller by means of a board mounted DIP switch. These include fan idle or starting speed at 30%, 40%, 50% or 60% of supply voltage, fan on or off below the idle setting, control temperature setting at 86°F (30°C), 95°F (35°C), 104°F (40°C), 113°F (45°C), and temperature differential settings of 7°F (4°C) and 18°F (10°C). The selectable fan on/off feature is operative when the temperature(s) drop below the control temperature setting.

Consult factory for use with compatible Kooltronic fans or blowers.

***Contact KOOLTRONIC for information.**

Kooltronic, Inc., 30 Pennington-Hopewell Road, P.O. Box 240, Pennington, NJ 08534-0240
Tel: (609) 466-3400 Fax: (609) 466-1114 kooltronic.com sales@kooltronic.com

ACCESSORIES AND OPTIONS* (continued)

EMI/RFI SHIELDING: See EMI/RFI-Shielded Twin Packaged Blowers.

FILTER RECOATING ADHESIVE: This compound is a superior product for recoating filters after washing. The adhesives penetrate dirt layers to keep the filter surface tacky for longer effective performance between washings. Part No. A-16.

FILTERS FOR REPLACEMENT: All KOOLTRONIC filters consist of a multi-layer grid of sturdy corrugated aluminum, securely held in a one-piece aluminum frame. Filters are required wherever air is drawn into an electronics enclosure or related cooling equipment to keep internal parts as clean as possible.

A non-drying adhesive coating traps a high percentage of particulate matter. These filters are reuseable, they may be washed and recoated with the appropriate filter recoating adhesive. Replacements are available for those which become damaged or otherwise non-serviceable.

Part No. 7001F (16.63" x 6.63" x 0.50" [422.3mm x 168.4 mm x 12.7mm])

GRILLE ASSEMBLIES: These assemblies are ideal for venting applications on the enclosure. These attractive grilles are made of mirror-finish stainless steel. All are 19" [482.6mm] wide. They are 65% open, comply with OSHA and UL safety standards, and include knurled captive fasteners for easy attachment and removal.

Model		
Grilles Assemblies	Filter Grilles Assemblies	Height Inches [metric]
7001X	KFG700-19	7.00 [177.8]
Overall depth, including fasteners:		
0.50" [12.7mm]	0.75" [19.1mm]	

***Contact KOOLTRONIC for information.**

OTHER VOLTAGES AND FREQUENCIES

SPECIAL EXTERNAL PAINT FINISHES

SPECIAL LINE CORD OR CONNECTORS

***Contact KOOLTRONIC for information.**

KOOLTRONIC also designs and manufactures a variety of Packaged Blowers to meet *unique* specifications. We invite your inquiries about our modification and custom-design capabilities.

THIS DOCUMENT IS THE PROPERTY OF KOOLTRONIC, INC. AND CONTAINS PROPRIETARY AND CONFIDENTIAL INFORMATION WHICH MUST NOT BE DUPLICATED, USED OR DISCLOSED TO OTHERS, EXCEPT AS EXPRESSLY AUTHORIZED IN WRITING BY KOOLTRONIC, INC.

REVISIONS

SYM	NOTICE	DESCRIPTION	DATE	APPROVED
–	EC 19/469	NEW DRAWING RELEASE	5/1/19	SDS/JS

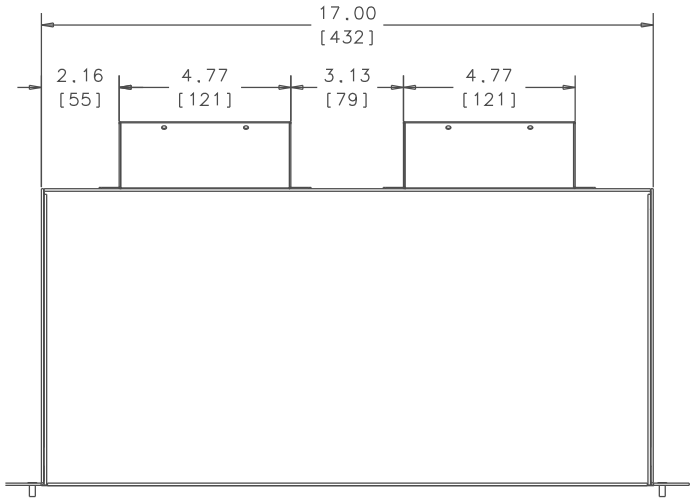

TOP VIEW

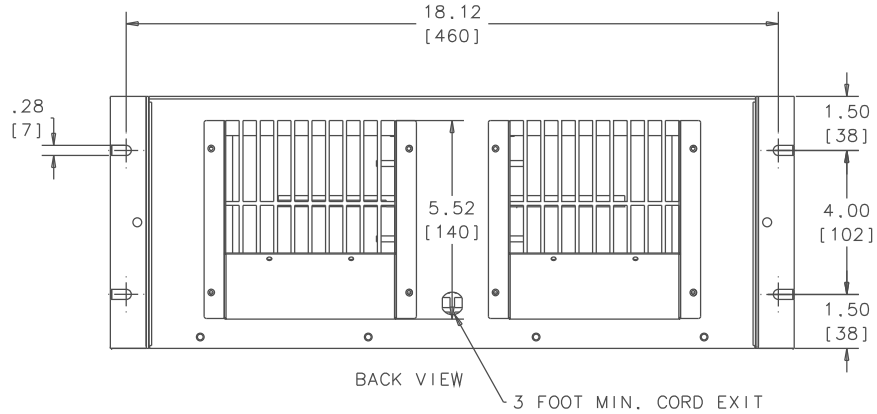

BACK VIEW

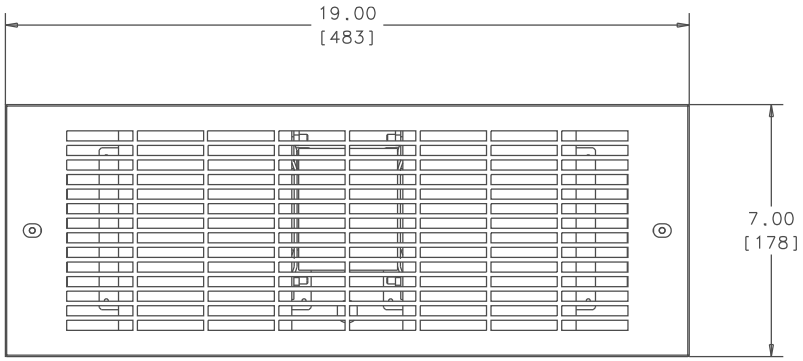

FRONT VIEW

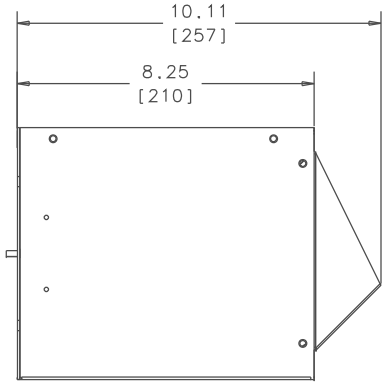

RIGHT SIDE VIEW

NOTE: GRILLE NOT SHOWN IN TOP AND RIGHT SIDE VIEWS

ALL DIMENSIONS ARE IN INCHES.
DIMENSIONS DESIGNATED MM ARE IN MILLIMETERS.

UNLESS OTHERWISE SPECIFIED
TOLERANCES NON-ACCUMULATIVE

TOL. ON	INCHES	MM
.XX	± .02	±
.XXX	± .010	±
ANGULAR		± 1/2 °

MATERIAL: SEE BOM

UNIT: KP701A

		DATE
DRAWN	Steve Schmierer	5/1/19
CHECKED	JERRY STEDNICK	5/3/19
ENG.	Ron Kaufman	5/6/19
MFG. ENG.		
APPROVED	Bruce Kreeley	5/9/19

KOOLTRONIC, INC
PENNINGTON, NJ USA

TITLE: GENERAL ARRANGEMENT KP701A

CODE IDENT. NO.	SIZE	DWG. NO.	REV
06223	C	3126-00-01	–

SCALE .375=1 | CAD. REF. | SHEET 1 OF 1