INSULATION SCHEDULE				
LOCATION	MATERIAL	TYPE	THICKNESS	MIN. R-VALUE
ROOF	072113.R10	RIGID	4"	R-24
WALL	PRECAST MFR.	RIGID	4"	R-24
WALL	072116.R10	BATT	0' - 3 5/8"	R-13.8
UNDERSLAB	072112.R02	RIGID	0' - 3 5/8"	R-18

NOTES:
1. THICKNESS VARIES WITH INSULATION TYPE
2. VALUE OF R-6 PER INCH USED FOR CALCULATION OF TOTAL MIN. R VALUE FOR RIGID INSULATION
3. VALUE OF R-3.8 PER INCH USED FOR CALCULATION OF TOTAL MIN. R VALUE FOR BATT INSULATION.
4 .CI = CONTINUOUS INSULATION
5. UNDERSLAB INSULATION BASED ON 24" LENGTH FROM PERIMETER.

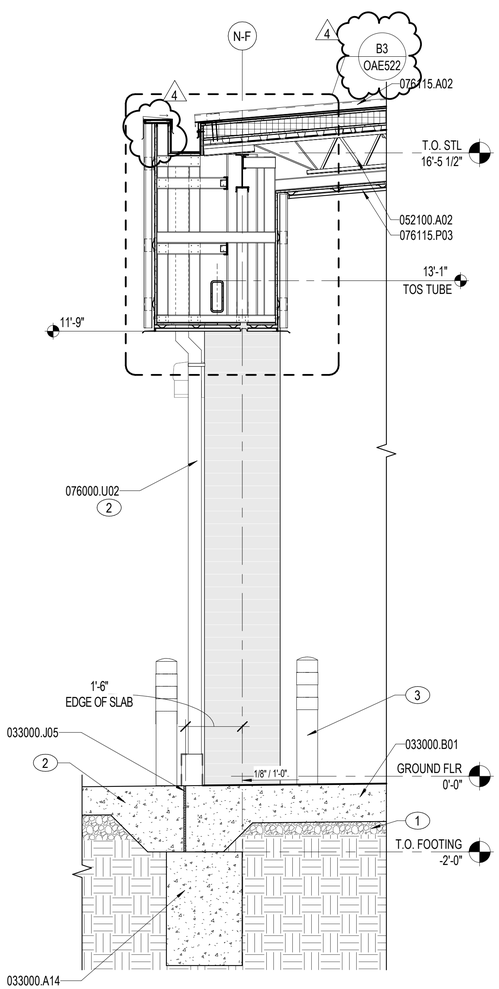

A1 WALL SECTION
1/2" = 1'-0"
OAE101A, OAE101B, OAE301

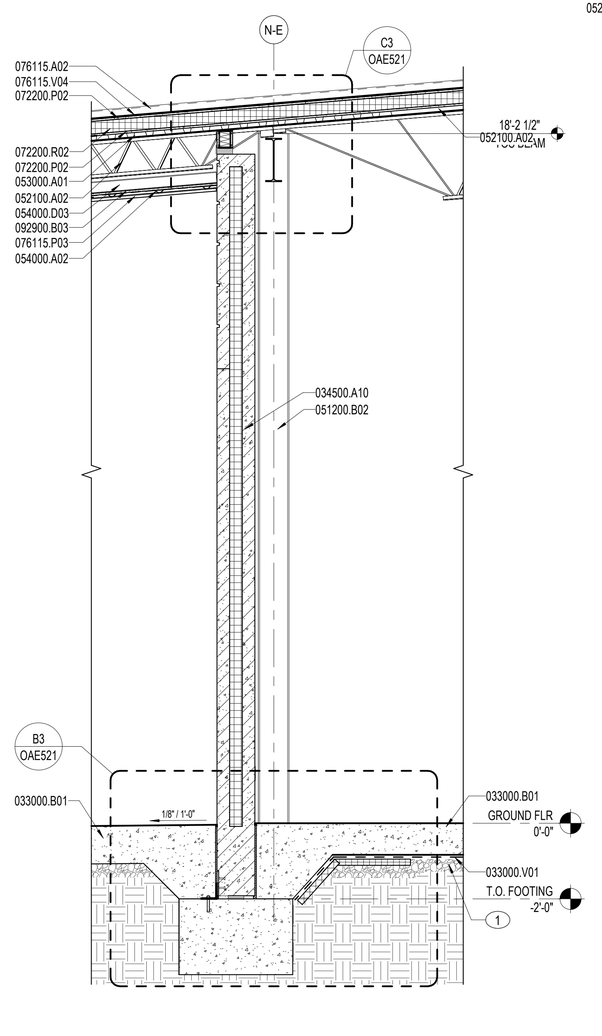

A2 WALL SECTION
1/2" = 1'-0"
OAE101A, OAE101B, OAE301

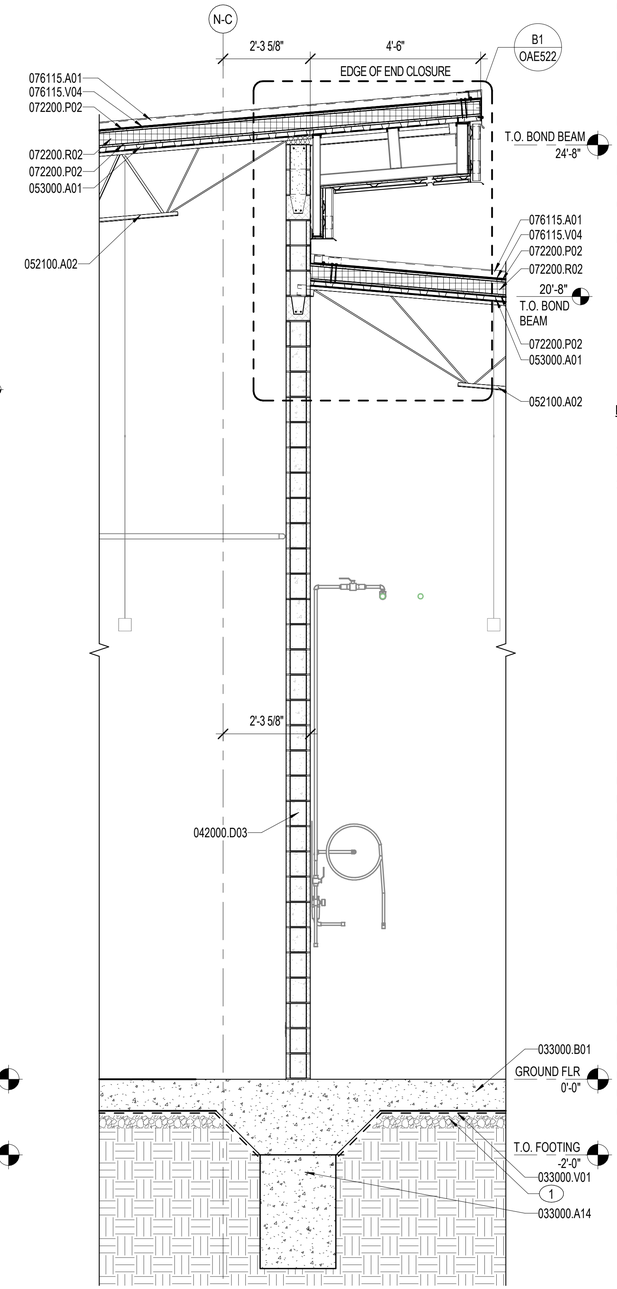

A3 WALL SECTION
1/2" = 1'-0"
OAE101A, OAE101B, OAE301

NOTES:

SHEET NOTES:

A REFER TO SHEET OAE001 FOR GENERAL ABBREVIATIONS AND ARCHITECTURAL SYMBOLS.

B ARCHITECTURAL ELEVATION FOR GROUND FLOOR TOP OF SLAB IS DEFINED AS 0'-0". REFER TO CIVIL PLANS FOR SLAB ELEVATIONS RELATIVE TO NORTH AMERICAN VERTICAL DATUM (NAVD) SYSTEM.

C R-VALUE FOR ALL ROOF INSULATION IS TO BE EQUAL TO R-25 MINIMUM CONTINUOUS. INSULATION FOR DESIGN PURPOSES IS BASED ON 1" POLYISOCYANURATE INSULATION = R-6.

D SLOPED ROOFING COMPOSITION IS AN ALUMINUM STANDING SEAM METAL ROOFING PANEL ON 5/8" GLASS MAT COVER BOARD OVER 4" POLYISOCYANURATE RIGID BOARD INSULATION ON METAL DECK. REFER TO SPECIFICATION SECTION 07 61 15. REFER TO STRUCTURAL DRAWINGS FOR DECK INFOR

E REFER TO SHEETS OAE541-OAE542 FOR ROOF PENETRATION AND TYPICAL ROOF DETAILS. COORDINATE ROOF PENETRATIONS WITH PLUMBING AND MECHANICAL DRAWINGS.

F ARCHITECTURAL PRECAST SANDWICH PANEL COMPOSITION IS (EXTERIOR) 4" CONCRETE, 4" RIGID INSULATION, (INTERIOR) 4" CONCRETE.

G STEEL EMBEDS ARE TO BE ENGINEERED AND PROVIDED BY PRECAST MANUFACTURER. COORDINATE WITH PRECAST MANUFACTURER FOR LOCATIONS AND DETAILS.

H REFER TO SHEET OAE111 FOR INTERIOR CEILING CONDITIONS.

I REFER TO VOLUME 1, SHEETS CS104, CG104, AND CG108 FOR CIVIL INFORMATION.

J REFER TO STRUCTURAL DRAWINGS FOR TOP OF STEEL HEIGHTS.

KEY NOTES (00)

1 POROUS FILL, 4 INCHES.

2 CONCRETE PAVEMENT, 9" THICK, OVER 8" (MIN) AGGREGATE BASE COURSE. REFER TO VOLUME 1, SHEET CS104, FOR MORE INFORMATION.

3 CONCRETE-FILLED STEEL BOLLARD, IMPACT-RATED. REFER TO DETAIL C4/OAE561.

MATERIAL NOTES

033000.A14	GRADE BEAM
033000.B01	CONCRETE SLAB
033000.J05	PREFORMED JOINT FILLER
033000.V01	VAPOR RETARDER
034500.A10	PRECAST CONCRETE INSULATED WALL PANEL
042000.D03	CMU 8"
051200.B02	STEEL WIDE FLANGE COLUMN
052100.A02	OPEN WEB STEEL JOIST
053000.A01	STEEL DECK
054000.A02	METAL CHANNEL
054000.D03	METAL STUD 3 5/8"
072200.P02	GLASS MAT GYPSUM PROTECTION BOARD
072200.R02	ROOF INSULATION BOARD
076000.U02	DOWNSPOUT
076115.A01	STANDING-SEAM METAL ROOF PANEL
076115.A02	STANDING-SEAM METAL ROOF PANEL SYSTEM
076115.P03	METAL SOFFIT PANEL SYSTEM
076115.V04	HIGH TEMPERATURE RESISTANT UNDERLAYMENT
092900.B03	GLASS MAT FACED EXTERIOR GYPSUM SHEATHING 5/8"

0 1' 2' 4' 6' 8'
1/2" = 1'-0" GRAPHIC SCALE

NOTE:
IF THIS DRAWING IS LESS THAN 34" X 22"
IT IS A REDUCED SIZE DRAWING

SYM	DESCRIPTION	DATE	APPR.
1	MOD P00005	05/2023	
2	MOD P00006 AND MOD P00007	10/2025	
4	BY AMENDMENT	2/6/2026	

STATE OF FLORIDA
BILLY KEITH HOLLOWAY
AR93022
2/7/2026
REGISTERED ARCHITECT
SEAL

BAMFORTH
ARCHITECTURE ENGINEERING

AE INFO

APPROVED
FOR COMMANDER NAVFAC 2/12/2026
ACTIVITY
Approved by J. Scott Roberts,
Asset Management Branch Head &
Supervisory Facility Planner, PWD
Beaufort, SC via email.

SATISFACTORY TO DATE 12/15/2022
DES EAD DRW MCL CHK BKH
PMDM KTB / RLH
BRANCH MANAGER CGM
CHIEF ENG/ARCH EJA
FP ENGINEER DSN

DEPARTMENT OF THE NAVY
NAVAL FACILITIES ENGINEERING SYSTEMS COMMAND
NAVAL FACILITIES ENGINEERING SYSTEMS COMMAND ~ MID-ATLANTIC
NORFOLK, VA
DC CODE:
MCAS BEAUFORT
BEAUFORT, SC
P-475 AIRCRAFT MAINTENANCE HANGAR - VOLUME 3 (OSF OPTION)
OSF / SHOP ANNEX - WALL SECTIONS

SCALE: As indicated
EPROJECT NO.: 1363603
CONSTR. CONTR. NO.
NAVFAC DRAWING NO.: 12860147
SHEET 946 OF 1412
OAE311

DRAWFORM REVISION: 25 AUGUST 2020

Autodesk Docs://2004213/BFA/T.102 F35 Maintenance Hangar/2004213F35 Maint Hangar_OSF Shop Annex.rvt
2/7/2026 3:36:44 PM

INSULATION SCHEDULE				
LOCATION	MATERIAL	TYPE	THICKNESS	MIN. R-VALUE
ROOF	072113.R10	RIGID	4"	R-24
WALL	PRECAST MFR.	RIGID	4"	R-24
WALL	072116.R10	BATT	0' - 3 5/8"	R-13.8
UNDERSLAB	072112.R02	RIGID	0' - 3 5/8"	R-18

NOTES:
1. THICKNESS VARIES WITH INSULATION TYPE
2. VALUE OF R-6 PER INCH USED FOR CALCULATION OF TOTAL MIN. R VALUE FOR RIGID INSULATION
3. VALUE OF R-3.8 PER INCH USED FOR CALCULATION OF TOTAL MIN. R VALUE FOR BATT INSULATION.
4 .CI = CONTINUOUS INSULATION
5. UNDERSLAB INSULATION BASED ON 24" LENGTH FROM PERIMETER.

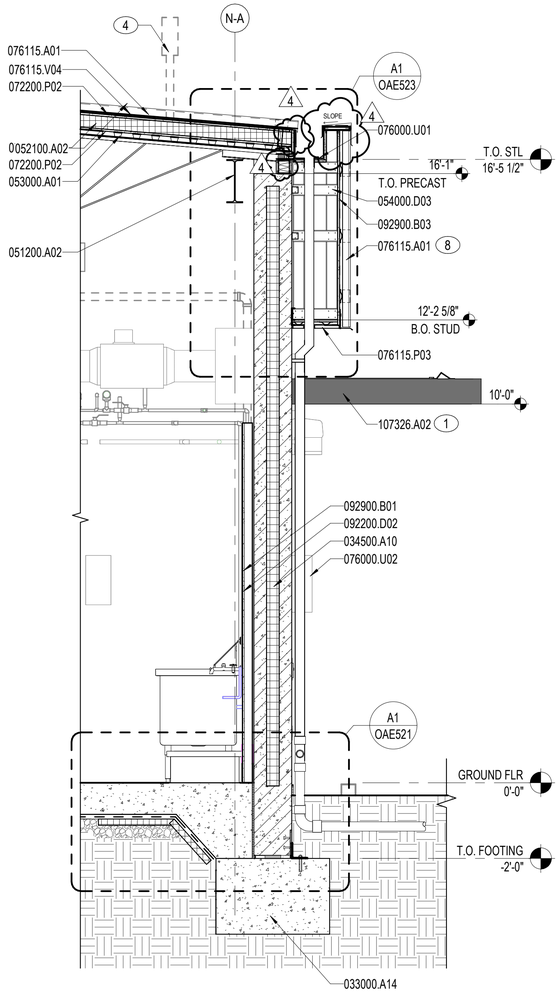

A1 WALL SECTION
1/2" = 1'-0"
OAE101B, OAE301

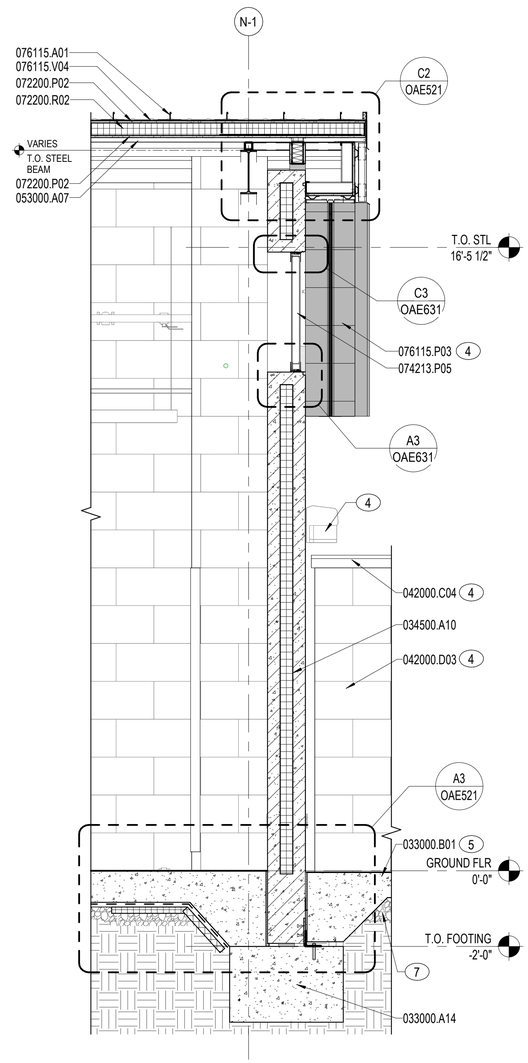

A2 WALL SECTION
1/2" = 1'-0"
OAE101A, OAE101B, OAE301

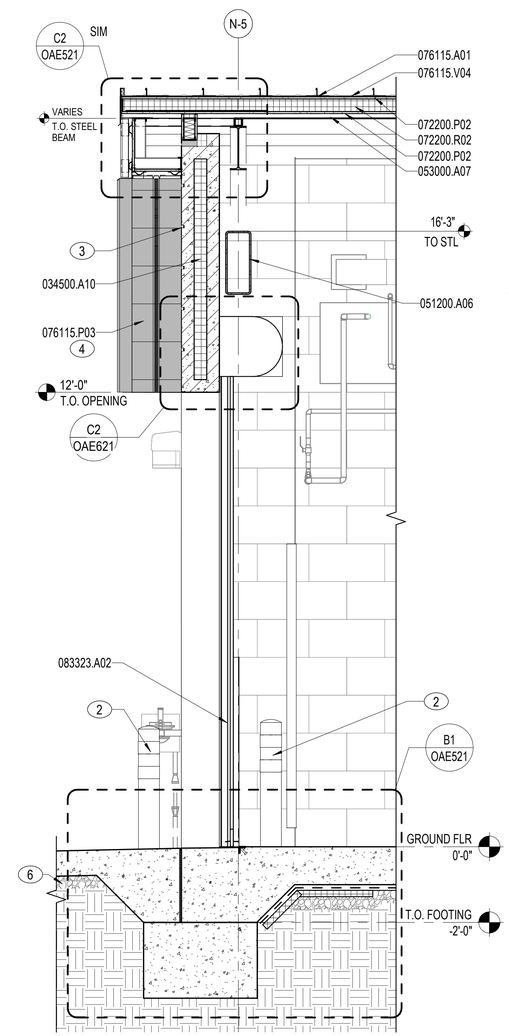

A3 WALL SECTION
1/2" = 1'-0"
OAE101B, OAE301

NOTES:

SHEET NOTES:

A REFER TO SHEET OAE001 FOR GENERAL ABBREVIATIONS AND ARCHITECTURAL SYMBOLS.

B ARCHITECTURAL ELEVATION FOR GROUND FLOOR TOP OF SLAB IS DEFINED AS 0'-0". REFER TO CIVIL PLANS FOR SLAB ELEVATIONS RELATIVE TO NORTH AMERICAN VERTICAL DATUM (NAVD) SYSTEM.

C R-VALUE FOR ALL ROOF INSULATION IS TO BE EQUAL TO R-25 MINIMUM CONTINUOUS. INSULATION FOR DESIGN PURPOSES IS BASED ON 1" POLYISOCYANURATE INSULATION = R-6.

D SLOPED ROOFING COMPOSITION IS AN ALUMINUM STANDING SEAM METAL ROOFING PANEL ON 5/8" GLASS MAT COVER BOARD OVER 4" POLYISOCYANURATE RIGID BOARD INSULATION ON METAL DECK. REFER TO SPECIFICATION SECTION 07 61 15. REFER TO STRUCTURAL DRAWINGS FOR DECK INFOR

E REFER TO SHEETS OAE541-OAE542 FOR ROOF PENETRATION AND TYPICAL ROOF DETAILS. COORDINATE ROOF PENETRATIONS WITH PLUMBING AND MECHANICAL DRAWINGS.

F ARCHITECTURAL PRECAST SANDWICH PANEL COMPOSITION IS (EXTERIOR) 4" CONCRETE, 4" RIGID INSULATION, (INTERIOR) 4" CONCRETE.

G STEEL EMBEDS ARE TO BE ENGINEERED AND PROVIDED BY PRECAST MANUFACTURER. COORDINATE WITH PRECAST MANUFACTURER FOR LOCATIONS AND DETAILS.

H REFER TO SHEET OAE111 FOR INTERIOR CEILING CONDITIONS.

I REFER TO VOLUME 1, SHEETS CS104, CG104, AND CG108 FOR CIVIL INFORMATION.

J REFER TO STRUCTURAL DRAWINGS FOR TOP OF STEEL HEIGHTS.

KEY NOTES (00)

1 REFER TO SHEET OAE561 FOR CANOPY PLAN AND SECTION DETAIL.
2 CONCRETE-FILLED STEEL BOLLARD, IMPACT-RATED. REFER TO DETAIL C4/OAE561.
3 PRECAST PANEL JOINT, 1 INCH, TYPICAL. REFER TO SHEETS OAE531-OAE532 FOR TYPICAL PRECAST JOINT DETAILS.
4 BEYOND.
5 CONCRETE SIDEWALK, BEYOND. REFER TO VOLUME 1, SHEET CS104 FOR ADDITIONAL INFORMATION.
6 POROUS FILL, 4 INCHES.
7 POROUS FILL, 8 INCHES.
8 STANDING SEAM METAL PANEL, VERTICAL INSTALLATION.

MATERIAL NOTES

033000.A14	GRADE BEAM
033000.B01	CONCRETE SLAB
034500.A10	PRECAST CONCRETE INSULATED WALL PANEL
042000.C04	PRECAST CONCRETE COPING
042000.D03	CMU 8"
051200.A02	STEEL WIDE FLANGE BEAM
051200.A06	STEEL TUBE
052100.A02	OPEN WEB STEEL JOIST
053000.A01	STEEL DECK
053000.A07	STEEL ROOF DECK
054000.D03	METAL STUD 3 5/8"
072200.P02	GLASS MAT GYPSUM PROTECTION BOARD
072200.R02	ROOF INSULATION BOARD
074213.P05	TRANSLUCENT PANEL SYSTEM
076000.U01	GUTTER
076000.U02	DOWNSPOUT
076115.A01	STANDING-SEAM METAL ROOF PANEL
076115.P03	METAL SOFFIT PANEL SYSTEM
076115.V04	HIGH TEMPERATURE RESISTANT UNDERLAYMENT
083323.A02	INSULATED OVERHEAD COILING DOOR
092200.D02	METAL STUD 2 1/2"
092900.B01	GYPSUM BOARD, GLASS MAT FACED 5/8"
092900.B03	GLASS MAT FACED EXTERIOR GYPSUM SHEATHING 5/8"
107326.A02	DOOR CANOPY SYSTEM

0 1' 2' 4' 6' 8'
1/2" = 1'-0" GRAPHIC SCALE

NOTE:
IF THIS DRAWING IS LESS THAN 34" X 22"
IT IS A REDUCED SIZE DRAWING

SYM	DESCRIPTION	DATE	APPR
1	MOD P00005	05/2023	
2	MOD P00006 AND MOD P00007	10/2025	
4	BY AMENDMENT	2/6/2026	

NAVFAC

STATE OF FLORIDA
BILLY KEITH HOLLOWAY
AR93022
2/7/2026
REGISTERED ARCHITECT
SEAL

BAMFORTH
CONSULTING ARCHITECTS
AE INFO

APPROVED
FOR COMMANDER NAVFAC 2/12/2026

ACTIVITY Approved by J. Scott Roberts, Asset Management Branch Head & Supervisory Facility Planner, PWD Beaufort, SC via email.

SATISFACTORY TO DATE 12/15/2022

DES	EAD	DRW	MCL	CHK	BKH
PMDM	KTB / RLH				
BRANCH MANAGER	CGM				
CHIEF ENG/ARCH	EJA				
FP ENGINEER	DSN				

DEPARTMENT OF THE NAVY
NAVAL FACILITIES ENGINEERING SYSTEMS COMMAND
DC CORE
MCAS BEAUFORT
NAVAL FACILITIES ENGINEERING SYSTEMS COMMAND - MID-ATLANTIC
NORFOLK, VA
BEAUFORT, SC
P-475 AIRCRAFT MAINTENANCE HANGAR - VOLUME 3 (OSF OPTION)
OSF / SHOP ANNEX - WALL SECTIONS

SCALE: As indicated
EPROJECT NO.: 1363603
CONSTR. CONTR. NO.
NAVFAC DRAWING NO. 12860148
SHEET 947 OF 1412

OAE312

DRAWFORM REVISION: 25 AUGUST 2020

Autodesk Docs://20043-MFIA T 503 T53 Maintenance Hangar/20043 F 53 Maint Hangar_OSF Shop Annex.rvt
2/7/2026 3:36:45 PM

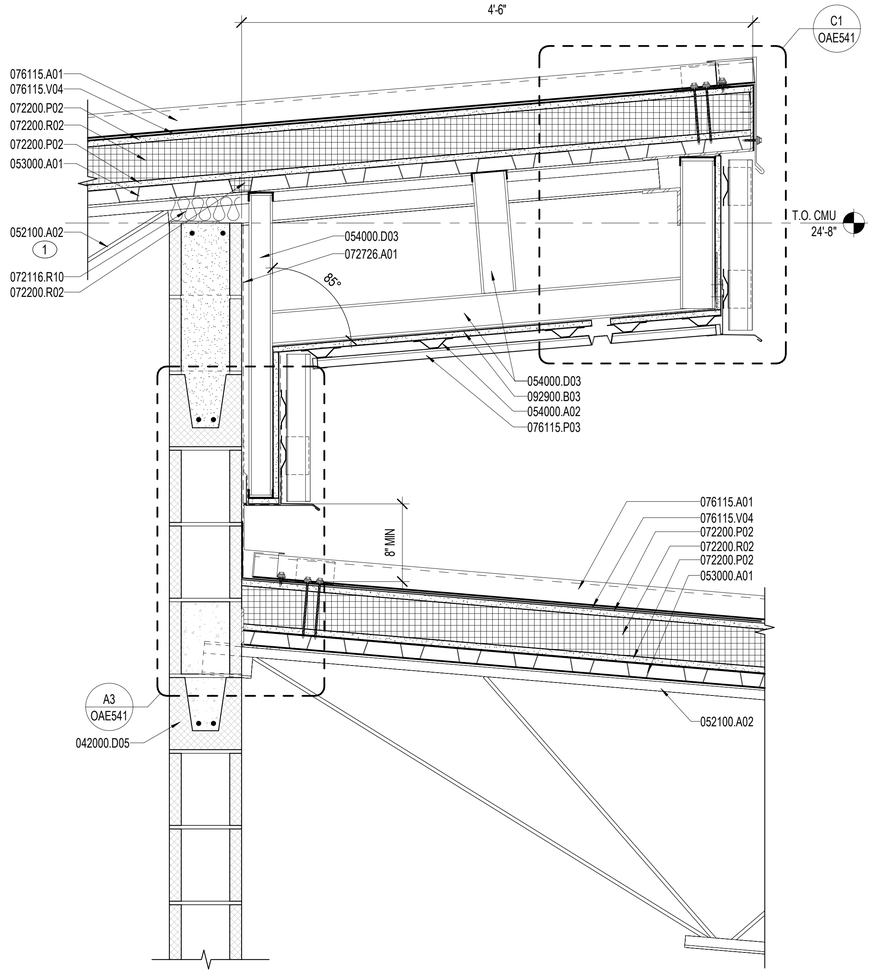

B1 SECTION DETAIL
1 1/2" = 1'-0"
OAE311

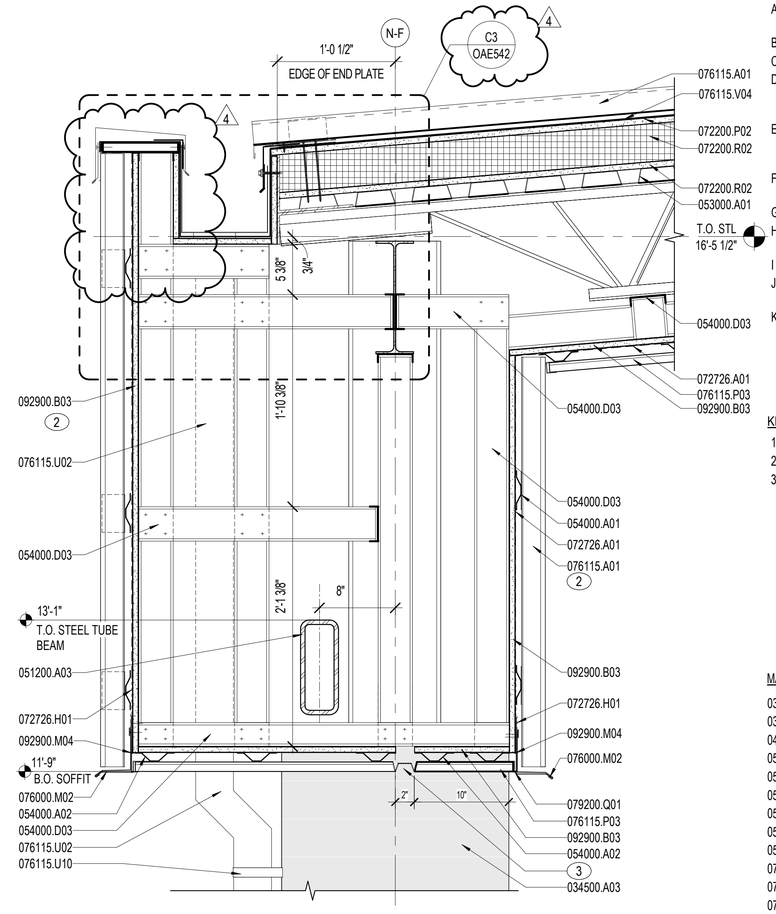

B3 SECTION DETAIL
1 1/2" = 1'-0"
OAE311

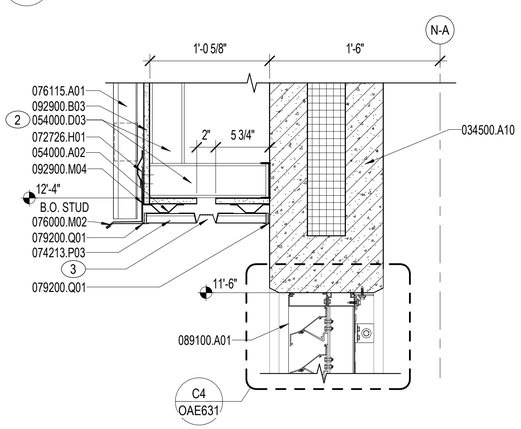

A3 SECTION DETAIL
1 1/2" = 1'-0"
OAE601

NOTES:

SHEET NOTES:

A REFER TO SHEET OAE001 FOR GENERAL ABBREVIATIONS AND ARCHITECTURAL SYMBOLS.
B REFER TO VOLUME 1, SHEETS CS014, CG104, AND CG108 FOR CIVIL INFORMATION.
C REFER TO SHEET OAE111 FOR INTERIOR CEILING CONDITIONS.
D REFER TO SHEETS OAE531-OAE532 FOR TYPICAL PRECAST JOINT SEALANT, REVEAL/JOINT DIMENSIONS, SEALANT WEEP DETAILS. REFER TO SHEET OAE532 FOR TYPICAL METAL WALL PANEL DETAILS.
E REFER TO SHEETS OAE541-OAE542 FOR ROOF PENETRATION AND TYPICAL ROOF DETAILS. COORDINATE ROOF PENETRATIONS WITH PLUMBING AND MECHANICAL DRAWINGS.
F REFER TO SHEETS OAE621 FOR DOOR DETAILS AND SHEET OAE631 FOR LOUVER AND TRANSLUCENT PANEL DETAILS.
G REFER TO SHEET OAE801 FOR PARTITION TYPES.
H REFER TO SHEET OAE821 FOR THROUGH PENETRATION FIRESTOP SYSTEM SCHEDULE AND TYPICAL RATED PARTITION PENETRATION DETAILS.
I REFER TO SHEET OAF601 FOR FINISH SCHEDULE AND FINISH IDENTIFICATION.
J ARCHITECTURAL EXTERIOR DIMENSIONS ARE TO EXTERIOR FACE OF INSULATED PRECAST PANEL AND FACE OF METAL STUD, UNO.
K ARCHITECTURAL DIMENSIONS ARE TO COLUMN GRID, FACE OF MASONRY / CONCRETE, FACE OF METAL STUD, UNO.

KEY NOTES (00)

1 JOIST WITH EXTENDED END. REFER TO DETAIL C2/OSF401.
2 STANDING SEAM METAL PANEL, VERTICAL INSTALLATION.
3 SOFFIT VENT 2" WIDE ALONG EXTENT OF NON-INSULATED EXTERIOR WALL SOFFIT AREAS.

MATERIAL NOTES

034500.A03	PRECAST CONCRETE WALL PANEL
034500.A10	PRECAST CONCRETE INSULATED WALL PANEL
042000.D05	CMU BOND BEAM
051200.A03	STEEL TUBE BEAM
052100.A02	OPEN WEB STEEL JOIST
053000.A01	STEEL DECK
054000.A01	METAL FRAMING
054000.A02	METAL CHANNEL
054000.D03	METAL STUD 3 5/8"
072116.R10	BLANKET INSULATION, UNFACED
072200.P02	GLASS MAT GYPSUM PROTECTION BOARD
072200.R02	ROOF INSULATION BOARD
072726.A01	FLUID-APPLIED AIR BARRIER, VAPOR-RETARDING
072726.H01	MEMBRANE FLASHING STRIP
074213.P03	METAL SOFFIT PANEL SYSTEM
076000.M02	DRIP EDGE
076115.A01	STANDING-SEAM METAL ROOF PANEL
076115.P03	METAL SOFFIT PANEL SYSTEM
076115.U02	DOWNSPOUT
076115.U10	METAL DOWNSPOUT STRAP
076115.V04	HIGH TEMPERATURE RESISTANT UNDERLAYMENT
079200.Q01	JOINT SEALANT
089100.A01	EXTRUDED ALUMINUM WALL LOUVER
092900.B03	GLASS MAT FACED EXTERIOR GYPSUM SHEATHING 5/8"
092900.M04	CORNERBEAD

0 2" 10" 20" 30"
1½" = 1'-0" GRAPHIC SCALE

NOTE:
IF THIS DRAWING IS LESS THAN 34" X 22"
IT IS A REDUCED SIZE DRAWING

SYM	DESCRIPTION	DATE	APPR
1	MOD P00005	05/2023	
2	MOD P00006 AND MOD P00007	10/2025	
4	BY AMENDMENT	2/6/2026	

NAVFAC

STATE OF FLORIDA
BILLY KEITH HOLLOWAY
AR93022
2/7/2026
REGISTERED ARCHITECT
SEAL

BAMFORTH
ARCHITECTURE | ENGINEERING

AE INFO

APPROVED
FOR COMMANDER NAVFAC 2/12/2026

ACTIVITY
Approved by J. Scott Roberts
Asset Management Branch Head &
Supervisory Facility Planner, PWD
Beaufort, SC via email.

SATISFACTORY TO DATE	12/15/2022
DES EAD	DRW MCL CHK BKH
PMDM	KTB / RLH
BRANCH MANAGER	CGM
CHIEF ENG/ARCH	EJA
FP ENGINEER	DSN

DEPARTMENT OF THE NAVY
NAVAL FACILITIES ENGINEERING SYSTEMS COMMAND ~ MID-ATLANTIC
NORFOLK, VA
DC CODE
MCAS BEAUFORT
BEAUFORT, SC
P-475 AIRCRAFT MAINTENANCE HANGAR - VOLUME 3 (OSF OPTION)
OSF / SHOP ANNEX - EXTERIOR SECTION DETAILS

SCALE: 1 1/2" = 1'-0"
EPROJECT NO.: 1363603
CONSTR. CONTR. NO.
NAVFAC DRAWING NO.: 12860155
SHEET 954 OF 1412

OAE522

DRAWFORM REVISION: 25 AUGUST 2020

Autodesk Docs://2042 VMFAT 502 F35 Maintenance Hangar/2042 F35 Maint Hangar_OSF Shop Annex.rvt
2/7/2026 3:38:46 PM

NOTES:

SHEET NOTES:

A REFER TO SHEET OAE001 FOR GENERAL ABBREVIATIONS AND ARCHITECTURAL SYMBOLS.

B REFER TO VOLUME 1, SHEETS CS014, CG104, AND CG108 FOR CIVIL INFORMATION.

C REFER TO SHEET OAE111 FOR INTERIOR CEILING CONDITIONS.

D REFER TO SHEETS OAE531-OAE532 FOR TYPICAL PRECAST JOINT SEALANT, REVEAL/JOINT DIMENSIONS, SEALANT WEEP DETAILS. REFER TO SHEET OAE532 FOR TYPICAL METAL WALL PANEL DETAILS.

E REFER TO SHEETS OAE541-OAE542 FOR ROOF PENETRATION AND TYPICAL ROOF DETAILS. COORDINATE ROOF PENETRATIONS WITH PLUMBING AND MECHANICAL DRAWINGS.

F REFER TO SHEETS OAE621 FOR DOOR DETAILS AND SHEET OAE631 FOR LOUVER AND TRANSLUCENT PANEL DETAILS.

G REFER TO SHEET OAE801 FOR PARTITION TYPES.

H REFER TO SHEET OAE821 FOR THROUGH PENETRATION FIRESTOP SYSTEM SCHEDULE AND TYPICAL RATED PARTITION PENETRATION DETAILS.

I REFER TO SHEET OAF601 FOR FINISH SCHEDULE AND FINISH IDENTIFICATION.

J ARCHITECTURAL EXTERIOR DIMENSIONS ARE TO EXTERIOR FACE OF INSULATED PRECAST PANEL AND FACE OF METAL STUD, UNO.

K ARCHITECTURAL DIMENSIONS ARE TO COLUMN GRID, FACE OF MASONRY / CONCRETE, FACE OF METAL STUD, UNO.

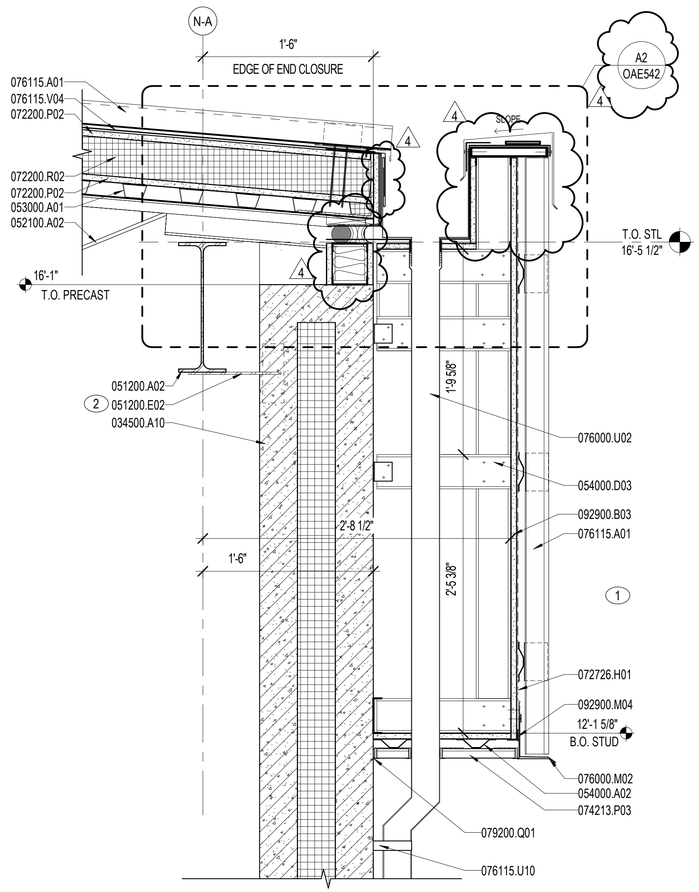

A1 SECTION DETAIL
1 1/2" = 1'-0"
OAE312

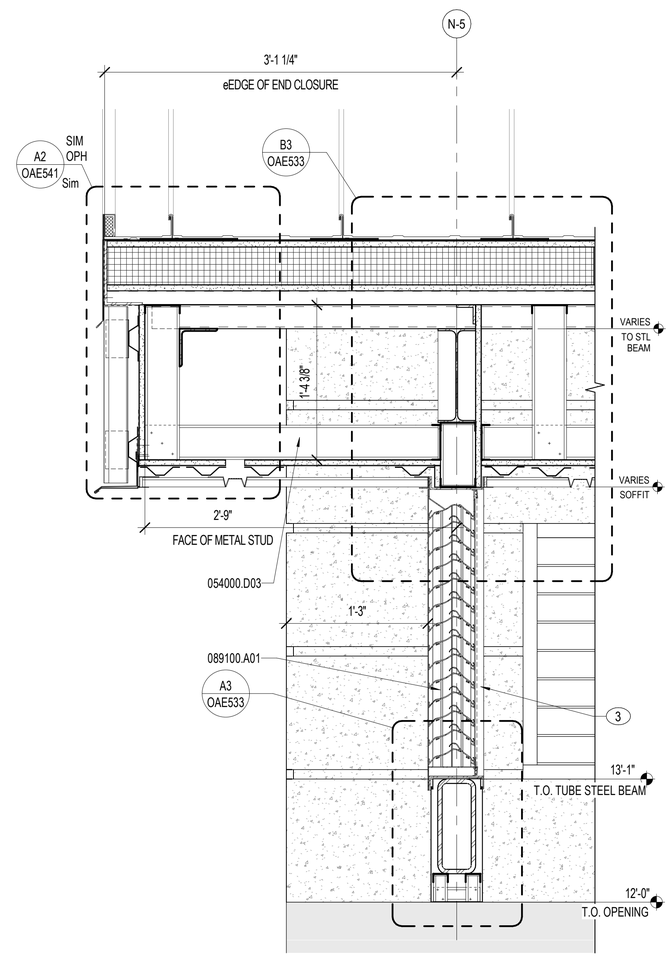

A3 SECTION DETAIL
1 1/2" = 1'-0"
OAE101B, OAE201, OAE313, OAE502

KEY NOTES (00)

1 STANDING SEAM METAL PANEL, VERTICAL INSTALLATION.

2 "TEE" SHAPED STEEL PLATE. REFER TO DETAIL C2/OSF504.

3 ALUMINUM SLEEVE - BY LOUVER MFR.

MATERIAL NOTES

034500.A10	PRECAST CONCRETE INSULATED WALL PANEL
051200.A02	STEEL WIDE FLANGE BEAM
051200.E02	STEEL PLATE
052100.A02	OPEN WEB STEEL JOIST
053000.A01	STEEL DECK
054000.A02	METAL CHANNEL
054000.D03	METAL STUD 3 5/8"
072200.P02	GLASS MAT GYPSUM PROTECTION BOARD
072200.R02	ROOF INSULATION BOARD
072726.H01	MEMBRANE FLASHING STRIP
074213.P03	METAL SOFFIT PANEL SYSTEM
076000.M02	DRIP EDGE
076000.U02	DOWNSPOUT
076115.A01	STANDING-SEAM METAL ROOF PANEL
076115.U10	METAL DOWNSPOUT STRAP
076115.V04	HIGH TEMPERATURE RESISTANT UNDERLAYMENT
079200.Q01	JOINT SEALANT
089100.A01	EXTRUDED ALUMINUM WALL LOUVER
092900.B03	GLASS MAT FACED EXTERIOR GYPSUM SHEATHING 5/8"
092900.M04	CORNERBEAD

0 2" 10" 20" 30"
1½" = 1'-0" GRAPHIC SCALE

NOTE:
IF THIS DRAWING IS LESS THAN 34" X 22"
IT IS A REDUCED SIZE DRAWING

SYM	DESCRIPTION	DATE	APPR.
1	MOD P00005	05/2023	
2	MOD P00006 AND MOD P00007	10/2025	
4	BY AMENDMENT	2/6/2026	

NAVFAC

STATE OF FLORIDA
BILLY KEITH HOLLOWAY
AR93022
2/7/2026
REGISTERED ARCHITECT
SEAL

BAMFORTH
ARCHITECTURE ENGINEERING CONSULTANTS

AE INFO

APPROVED
FOR COMMANDER NAVFAC 2/12/2026

ACTIVITY: Approved by J. Scott Roberts, Asset Management Branch Head & Supervisory Facility Planner, PWD Beaufort, SC via email.

SATISFACTORY TO DATE	12/15/2022
DES EAD	DRW MCL	CHK BKH
PMDM	KTB / RLH
BRANCH MANAGER	CGM
CHIEF ENG/ARCH	EJA
FP ENGINEER	DSN

DEPARTMENT OF THE NAVY
DO: CORE
NAVAL FACILITIES ENGINEERING SYSTEMS COMMAND ~ MID-ATLANTIC
NAVAL FACILITIES ENGINEERING SYSTEMS COMMAND NORFOLK, VA
MCAS BEAUFORT
BEAUFORT, SC
P-475 AIRCRAFT MAINTENANCE HANGAR - VOLUME 3 (OSF OPTION)
OSF / SHOP ANNEX - EXTERIOR SECTION DETAILS

SCALE: 1 1/2" = 1'-0"
EPROJECT NO.: 1363603
CONSTR. CONTR. NO.
NAVFAC DRAWING NO. 12860156
SHEET 955 OF 1412

OAE523

DRAWFORM REVISION: 25 AUGUST 2020

Autodesk Docs://20042 UMFAT 503 F35 Maintenance Hangar/20042 F35 Maint Hangar_OSF Shop Annex.rvt
2/7/2026 3:36:47 PM

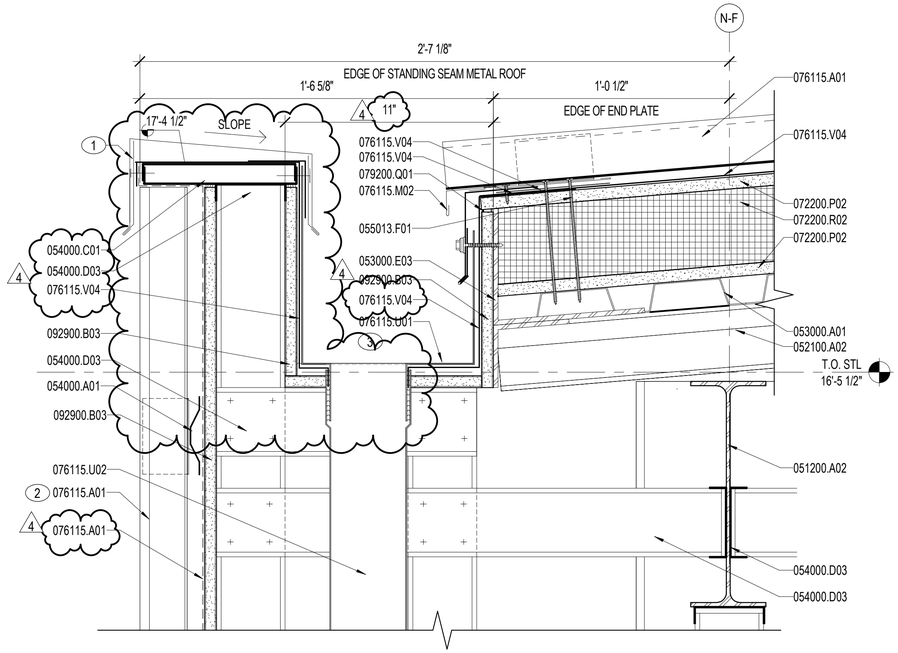

C3 EAVE / CONCEALED GUTTER DETAIL

3" = 1'-0"

OAE522

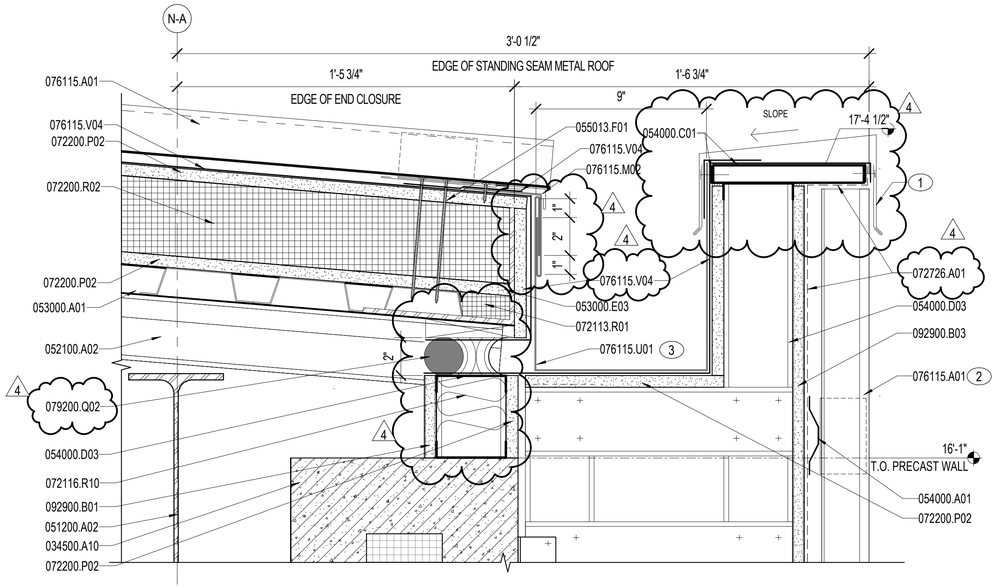

A2 EAVE / CONCEALED GUTTER DETAIL

3" = 1'-0"

OAE523

NOTES:

SHEET NOTES:

A REFER TO SHEET OAE001 FOR GENERAL ABBREVIATIONS AND ARCHITECTURAL SYMBOLS.

B R-VALUE FOR ALL ROOF INSULATION IS TO BE EQUAL TO R-25 MINIMUM CONTINUOUS. INSULATION FOR DESIGN PURPOSES IS BASED ON 1" POLYISOCYANURATE INSULATION = R-6.

C SLOPED ROOFING COMPOSITION IS AN ALUMINUM STANDING SEAM METAL ROOFING PANEL ON 5/8" GLASS MAT COVER BOARD OVER 4" POLYISOCYANURATE RIGID BOARD INSULATION ON METAL DECK. REFER TO SPECIFICATION SECTION 07 61 15. REFER TO STRUCTURAL DRAWINGS FOR DECK INFOR

D REFER TO STRUCTURAL DRAWINGS FOR TOP OF STEEL HEIGHTS.

E ARCHITECTURAL EXTERIOR DIMENSIONS ARE TO EXTERIOR FACE OF INSULATED PRECAST PANEL AND FACE OF METAL STUD, UNO.

KEY NOTES (00)

1 METAL CAP AND DRIP - COLOR TO MATCH STANDING SEAM METAL ROOF.

2 STANDING SEAM METAL PANEL, VERTICAL INSTALLATION.

3 GUTTER SIZE 10" DEPTH, 9" WIDE

MATERIAL NOTES

034500.A10	PRECAST CONCRETE INSULATED WALL PANEL
051200.A02	STEEL WIDE FLANGE BEAM
052100.A02	OPEN WEB STEEL JOIST
053000.A01	STEEL DECK
053000.E03	END CLOSURE
054000.A01	METAL FRAMING
054000.C01	METAL STUD RUNNER TRACK
054000.D03	METAL STUD 3 5/8"
055013.F01	STEEL FASTENER
072113.R01	BOARD INSULATION
072116.R10	BLANKET INSULATION, UNFACED
072200.P02	GLASS MAT GYPSUM PROTECTION BOARD
072200.R02	ROOF INSULATION BOARD
072726.A01	FLUID-APPLIED AIR BARRIER, VAPOR-RETARDING
076115.A01	STANDING-SEAM METAL ROOF PANEL
076115.M02	DRIP EDGE
076115.U01	GUTTER
076115.U02	DOWNSPOUT
076115.V04	HIGH TEMPERATURE RESISTANT UNDERLAYMENT
079200.Q01	JOINT SEALANT
079200.Q02	BACKSTOP AND SEALANT
092900.B01	GYPSUM BOARD, GLASS MAT FACED 5/8"
092900.B03	GLASS MAT FACED EXTERIOR GYPSUM SHEATHING 5/8"

0 1" 5" 10" 15"

3" = 1'-0" GRAPHIC SCALE

NOTE:
IF THIS DRAWING IS LESS THAN 34" X 22"
IT IS A REDUCED SIZE DRAWING

SYM	DESCRIPTION	DATE	APPR
1	MOD P00005	05/2023	
2	MOD P00006 AND MOD P00007	10/2025	
4	BY AMENDMENT	2/6/2026	

NAVFAC

STATE OF FLORIDA
BILLY KEITH HOLLOWAY
AR93022
2/7/2026
REGISTERED ARCHITECT
SEAL

BAMFORTH
CONSULTING ARCHITECTS

AE INFO

APPROVED
FOR COMMANDER NAVFAC 2/12/2026

ACTIVITY: Approved by J. Scott Roberts, Asset Management Branch Head & Supervisory Facility Planner, PWD Beaufort, SC via email.

SATISFACTORY TO DATE	12/15/2022
DES EAD	DRW MEC / CHK BKH
PMDM	KTB / RLH
BRANCH MANAGER	CGM
CHIEF ENG/ARCH	EJA
FP ENGINEER	DSN

DEPARTMENT OF THE NAVY
NAVAL FACILITIES ENGINEERING SYSTEMS COMMAND
DC CORE
NAVAL FACILITIES ENGINEERING SYSTEMS COMMAND - MID-ATLANTIC NORFOLK, VA
MCAS BEAUFORT BEAUFORT, SC
P-475 AIRCRAFT MAINTENANCE HANGAR - VOLUME 3 (OSF OPTION)
ROOF DETAILS - STANDING SEAM

SCALE:	3" = 1'-0"
EPROJECT NO.:	1363603
CONSTR. CONTR. NO.	
NAVFAC DRAWING NO.	12860161
SHEET	960 OF 1412

OAE542

DRAWFORM REVISION 25 AUGUST 2020

Autodesk Docs://20242 MIFA1 503 F35 Maintenance Hangar/20242 F35 Maint Hangar_OSF Shop Annex.rvt
2/7/2026 3:36:47 PM