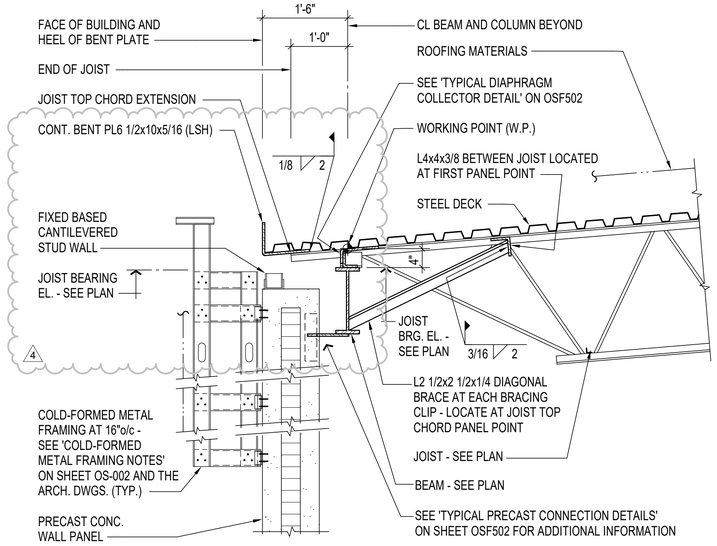

C1 SECTION
3/4" = 1'-0"

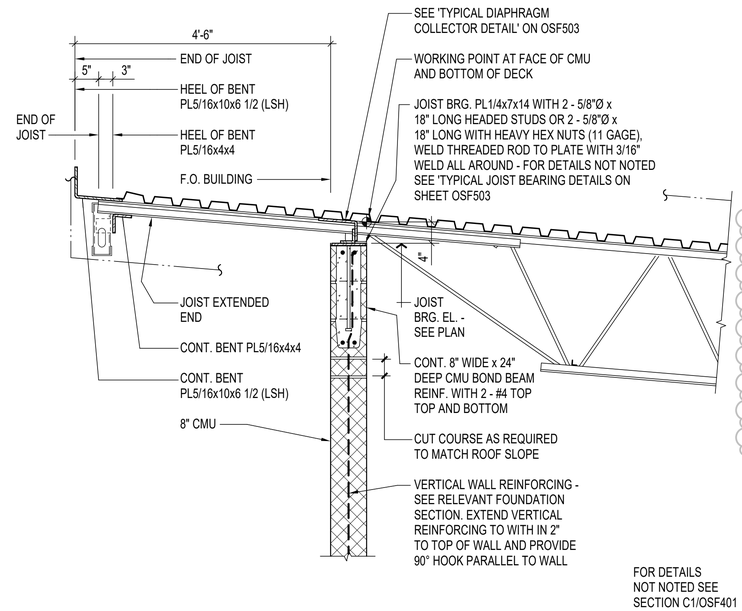

C2 SECTION
3/4" = 1'-0"

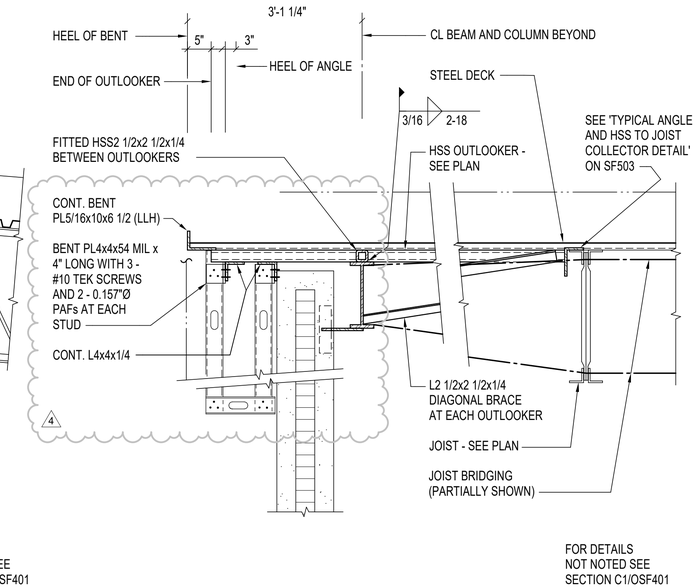

C4 SECTION
3/4" = 1'-0"

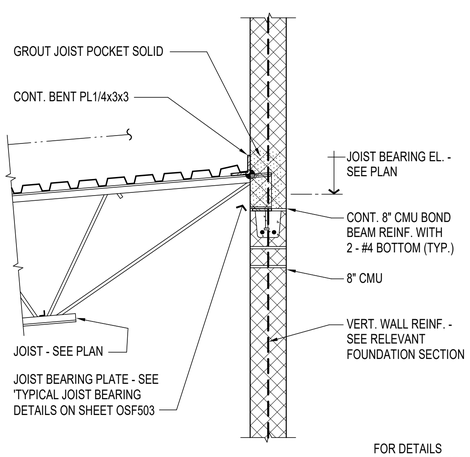

A1 SECTION
3/4" = 1'-0"

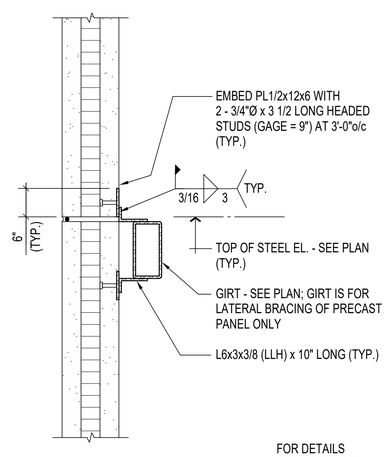

A2 SECTION
3/4" = 1'-0"

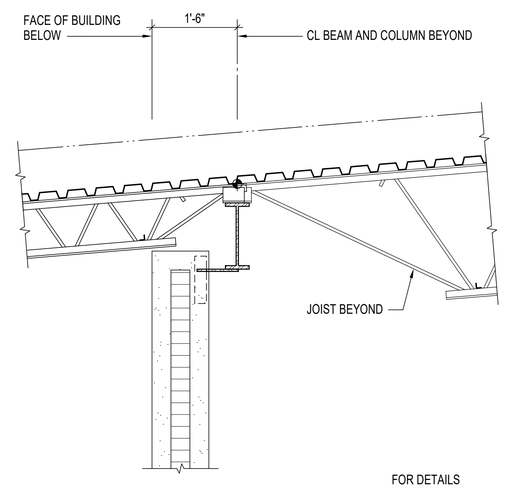

A3 SECTION
3/4" = 1'-0"

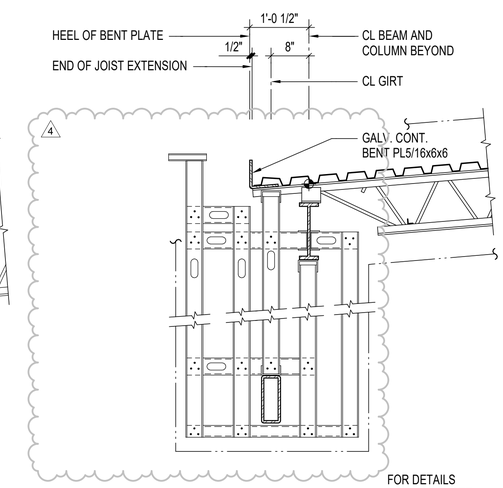

A4 SECTION
3/4" = 1'-0"

PLAN NORTH
N

0 ½" 1" 2" 3" 4"
1'-0" = 1'-0" GRAPHIC SCALE

SPEIGHT·MARSHALL·FRANCIS
STRUCTURAL ENGINEERS
1228 PERIMETER PARKWAY, SUITE 201
VIRGINIA BEACH, VIRGINIA 23454
P: 757 427.1020
7814 CAROUSEL LANE SUITE 200
RICHMOND, VIRGINIA 23294
P: 804.464.4111
SMF Job No.
WWW.SMANDF.CO

NOTE:
IF THIS DRAWING IS LESS THAN 34" X 22"
IT IS A REDUCED SIZE DRAWING

STM	DESCRIPTION	DATE	APPR
4	BY AMENDMENT	02/05/2026	EHI
2	MOD P00006 AND MOD P00007	10/2025	
1	MOD P00005	05/2023	

NAVFAC

COMMONWEALTH OF VIRGINIA
EARL H. INGE, JR.
Lic. No. 035522
1/13/2023
PROFESSIONAL ENGINEER

BAMFORTH
ENGINEERS & CONSULTANTS

AE INFO
APPROVED
FOR COMMANDER NAVFAC 2/12/2026
ACTIVITY
Approved by J. Scott Roberts, Asset Management Branch Head & Supervisory Facility Planner, PWD Beaufort, SC via email.

SATISFACTORY TO DATE			12/15/2022
DES	EHI	DRW SEC	CHK DWS
PMDM			KTB / RLH
BRANCH MANAGER			NEK
CHIEF ENG/ARCH			EJA
FP ENGINEER			DSN

DEPARTMENT OF THE NAVY
NAVAL FACILITIES ENGINEERING SYSTEMS COMMAND ~ MID-ATLANTIC
NAVAL FACILITIES ENGINEERING SYSTEMS COMMAND
NORFOLK, VA
DC CORE:
MCAS BEAUFORT
BEAUFORT, SC
P-475 AIRCRAFT MAINTENANCE HANGAR - VOLUME 3 (OSF OPTION)
FRAMING SECTIONS

SCALE:	3/4" = 1'-0"
EPROJECT NO.:	1363603
CONSTR. CONTR. NO.	
NAVFAC DRAWING NO.	12860126
SHEET	925 OF 1412

OSF401

DRAWFORM REVISION: 25 AUGUST 2020

Autodesk Docs://2042 MF-A1 120 F35 Maintenance Hangar/BLDG PKTS_OSF 13638803.0.rvt
2/5/2026 3:44:14 PM