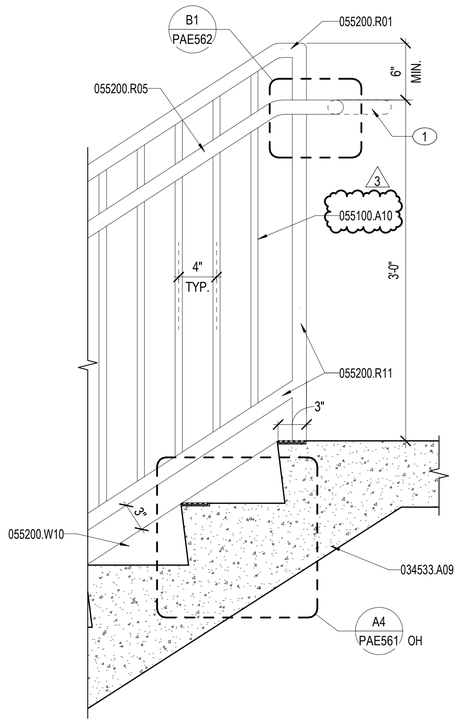

C1 TOP LANDING, TYP
1 1/2" = 1'-0"
PAE421

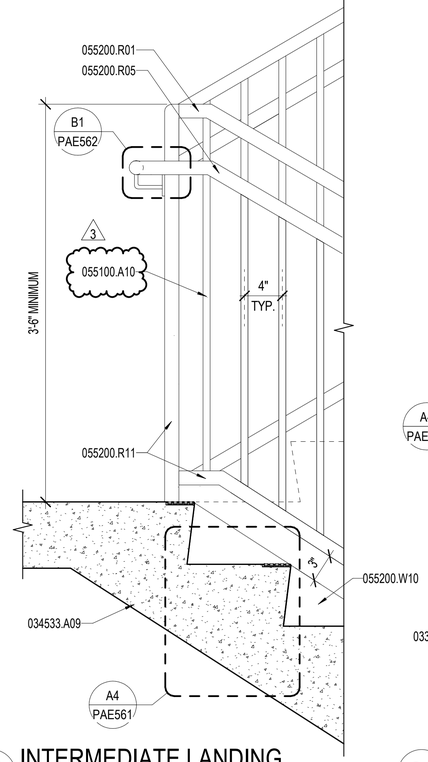

C2 INTERMEDIATE LANDING
1 1/2" = 1'-0"
PAE421

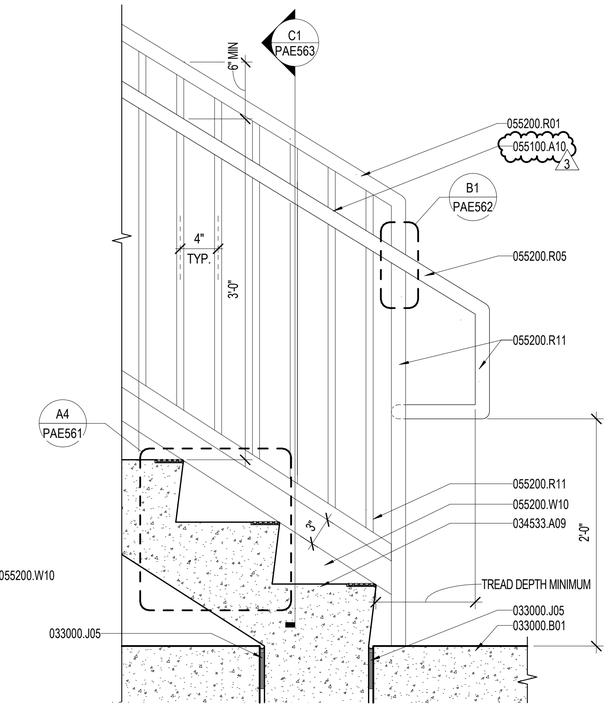

C3 BOTTOM LANDING, TYP
1 1/2" = 1'-0"

NOTES:

SHEET NOTES:

A REFER TO SHEET PAE001 FOR ARCHITECTURAL ABBREVIATIONS AND SYMBOLS.

B DESIGN OF THE STAIRS IS ASSIGNED TO A DELEGATED ENGINEER WHO IS RESPONSIBLE FOR SIZES AND THICKNESS OF STAIR COMPONENTS TO MEET THE SPECIFIED PERFORMANCE REQUIREMENTS. INFORMATION ON THIS SHEET IS PROVIDED FOR THE OVERALL DESIGN CONCEPT AND TO SHOW CERTAIN CODE REQUIRED DIMENSIONS.

C ALL VERTICAL 1/2" DIAMETER PICKETS TO BE SPACED 4" OC MAX.

D SPACE 1-1/2" OD HANDRAIL POSTS 5'-0" OC MAX.

E ALL HANDRAILS ARE 3'-0" ABOVE THE STAIR TREAD NOSING, UNO.

KEY NOTES (00)

1 4" OC MAX.
2 BOLTED CONNECTION AT EDGE OF PRECAST TO ATTACH RAILINGS, TYPICAL.
3 MAX RISER HEIGHT 7" PER CODE.
4 PRECAST CONCRETE STAIR.
5 WHERE HANDRAILS ARE SUPPORTED BY GUARDRAILS - ALL HANDRAIL TERMINATIONS WILL BE TO A VERTICAL GUARDRAIL POST.

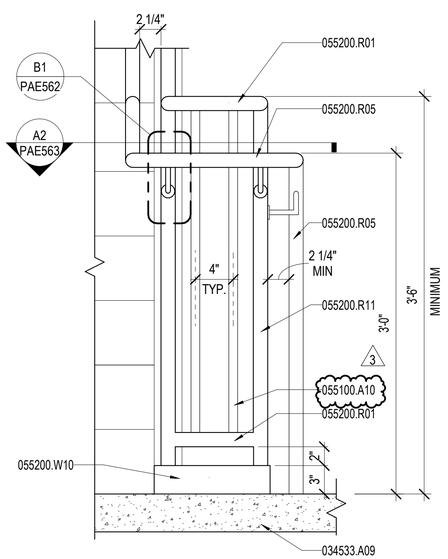

A1 INTERMEDIATE LANDING
1 1/2" = 1'-0"
PAE421

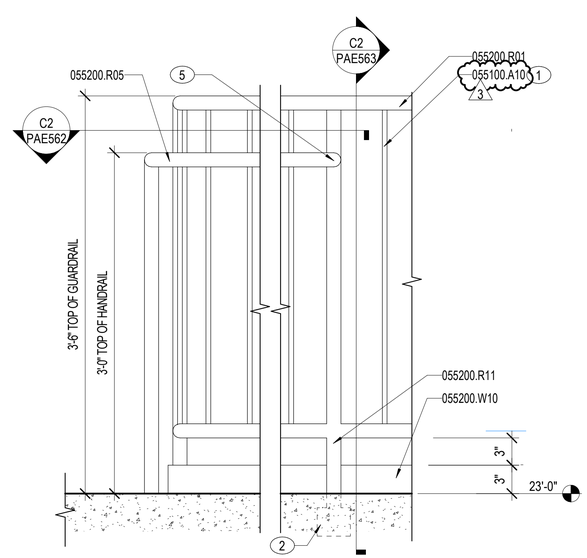

A2 TOP LANDING GUARDRAIL/HANDRAIL
1 1/2" = 1'-0"
PAE421

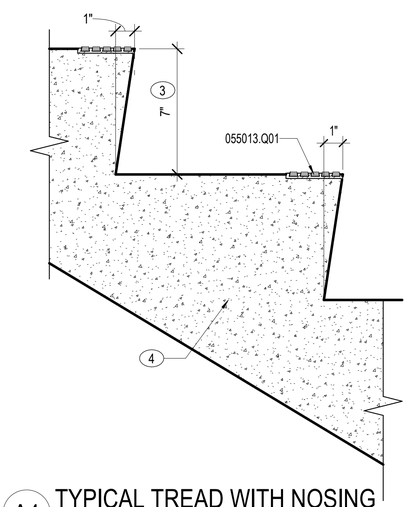

A4 TYPICAL TREAD WITH NOSING
3" = 1'-0"
PAE561, PAE562

MATERIAL NOTES

033000.B01	CONCRETE SLAB
033000.J05	PREFORMED JOINT FILLER
034533.A09	PRECAST/PRESTRESSED CONCRETE STAIR
055013.Q01	ABRASIVE SAFETY NOSING
055100.A10	STEEL TUBE
055200.R01	STEEL GUARDRAIL
055200.R05	STEEL HANDRAIL
055200.R11	STEEL PIPE 1 1/2" OD NOM
055200.W10	STEEL TOE PLATE

0 6" 1' 2'
1½" = 1'-0" GRAPHIC SCALE

0 1" 5" 10" 15"
3" = 1'-0" GRAPHIC SCALE

NOTE:
IF THIS DRAWING IS LESS THAN 34" X 22"
IT IS A REDUCED SIZE DRAWING

SYM	DESCRIPTION	DATE	APPR
1	MOD P00005	05/2023	
2	MOD P00006 AND P00007	10/2025	
3	BY AMENDMENT	1/16/2026	

NAVFAC

STATE OF FLORIDA
BILLY KEITH HOLLOWAY
AR93022
01/16/2026
REGISTERED ARCHITECT
SEAL

BAMFORTH
CONSULTING ARCHITECTS

A/E INFO

APPROVED
FOR COMMANDER NAVFAC | 1/26/2026

ACTIVITY:
Approved by J. Scott Roberts,
Asset Management Branch Head &
Supervisory Facility Planner, PWD
Beaufort, SC via email.

SATISFACTORY TO DATE 12/15/2022

DES	EAD	DRW RWR	CHK BKH
PM/DM	KTB / RLH		
BRANCH MANAGER	CGM		
CHIEF ENG/ARCH	EJA		
FP ENGINEER	DSN		

DEPARTMENT OF THE NAVY
NAVAL FACILITIES ENGINEERING SYSTEMS COMMAND
DC CODE: NAVAL FACILITIES ENGINEERING SYSTEMS COMMAND – MID-ATLANTIC NORFOLK, VA
MCAS BEAUFORT BEAUFORT, SC
P-475 AIRCRAFT MAINTENANCE HANGAR - VOLUME 4 (PARKING GARAGE OPTION)
PARKING GARAGE - STAIR DETAILS

SCALE: As indicated
EPROJECT NO.: 1363603
CONSTR. CONTR. NO.
NAVFAC DRAWING NO. 12860349
SHEET 1128 OF 1412

PAE561

DRAWFORM REVISION: 25 AUGUST 2020

Autodesk Docs://20042 MAFAT 502 735 Maintenance Hangar/20042 735 Maint Hangar_Parking Facility.rvt
1/14/2026 4:25:18 PM

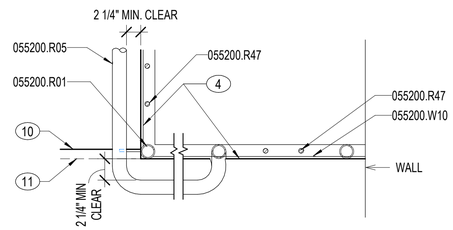

C2 HANDRAIL AND GUARDRAIL - TOP LANDING
1 1/2" = 1'-0"
PAE411, PAE412, PAE413, PAE561

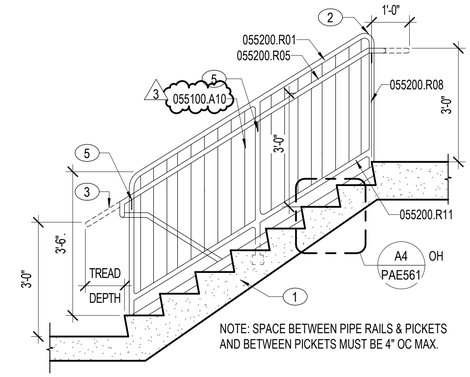

C3 INTERMEDIATE LANDING, TYP
1/2" = 1'-0"
PAE421

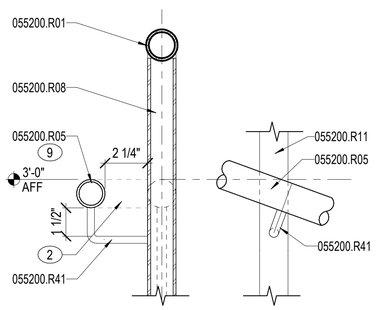

B1 GUARDRAIL MOUNTED HANDRAIL
3" = 1'-0"
PAE561

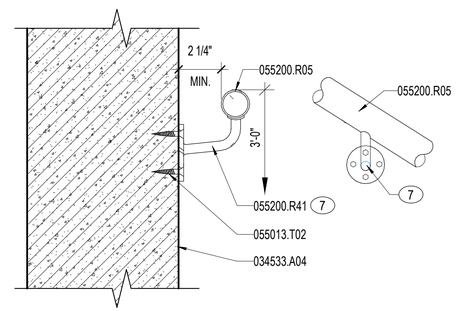

B2 WALL MOUNTED HANDRAIL
3" = 1'-0"
PAE562

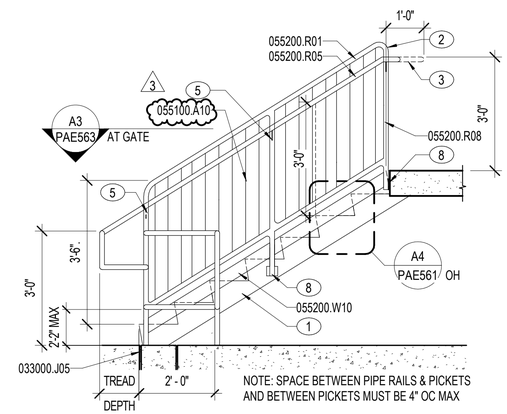

B3 BOTTOM LANDING, TYP
1/2" = 1'-0"
PAE421

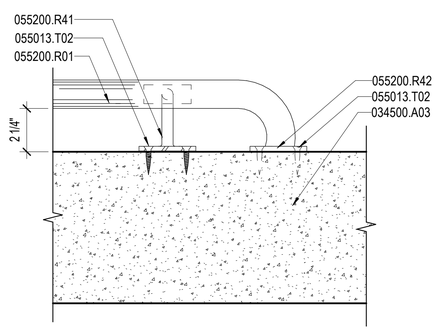

A1 STAIR WALL RAILING PLAN
3" = 1'-0"

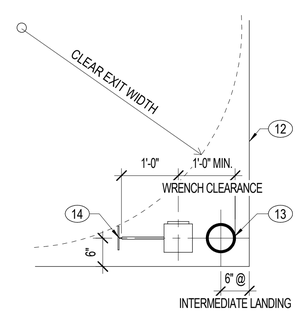

A2 TYPICAL STANDPIPE
3/4" = 1'-0"

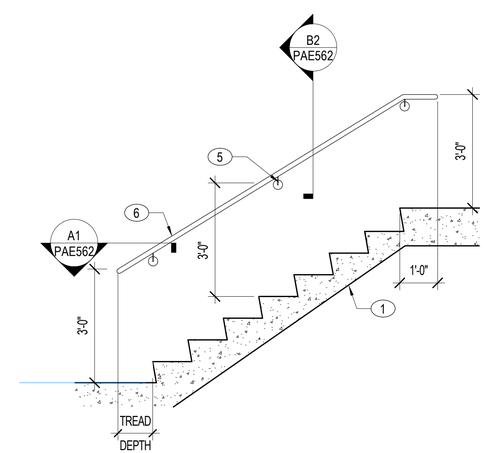

A3 HANDRAIL ELEVATION AT WALL
1/2" = 1'-0"

NOTES:

SHEET NOTES:

A REFER TO SHEET PAE001 FOR ARCHITECTURAL ABBREVIATIONS AND SYMBOLS.

B DESIGN OF THE STAIRS IS ASSIGNED TO A DELEGATED ENGINEER WHO IS RESPONSIBLE FOR SIZES AND THICKNESS OF STAIR COMPONENTS TO MEET THE SPECIFIED PERFORMANCE REQUIREMENTS. INFORMATION ON THIS SHEET IS PROVIDED FOR THE OVERALL DESIGN CONCEPT AND TO SHOW CERTAIN CODE REQUIRED DIMENSIONS.

C ALL VERTICAL 1/2" DIAMETER PICKETS TO BE SPACED 4" OC MAX.

D SPACE 1-1/2" OD HANDRAIL POSTS 5'-0" OC MAX.

E ALL HANDRAILS ARE 3'-0" ABOVE THE STAIR TREAD NOSING, UNO.

KEY NOTES (00)

1 PRECAST CONCRETE STAIR.
2 ALL RAIL INTERSECTIONS TO BE RADIUSED (TYP).
3 HANDRAIL AT WALL SIDE OF STAIR (SHOWN DASHED) SEE ELEVATION A3/PAE562 FOR INFORMATION.
4 FACE OF PRECAST BELOW.
5 LOCATE BRACKETS AT SPACING REQ'D TO SUPPORT STRUCTURAL LOAD, NOT TO EXCEED 5'-0" OC.
6 HANDRAIL AT WALL SIDE OF STAIR.
7 BRACKET SUPPORT 60" OC MAX.
8 BOLTED CONNECTION AT EDGE OF PRECAST TO ATTACH RAILINGS, TYPICAL.
9 EXTEND WRAP AROUND HANDRAIL A MINIMUM OF 12" PAST FACE OF GUARDRAIL.
10 FRONT EDGE OF STAIR TREAD BELOW.
11 LINE OF STAIR RISER.
12 INTERIOR FACE OF STAIR ENCLOSURE.
13 VERIFY DIMENSIONS AND CLEARANCE FOR STANDPIPE AND VALVE.
14 5" DIAMETER.

MATERIAL NOTES

033000.J05	PREFORMED JOINT FILLER
034500.A03	PRECAST CONCRETE WALL PANEL
034533.A04	PRECAST/PRESTRESSED CONCRETE WALL PANEL
055013.T02	ANCHOR BOLT
055100.A10	STEEL TUBE
055200.R01	STEEL GUARDRAIL
055200.R05	STEEL HANDRAIL
055200.R08	STEEL GUARDRAIL POST
055200.R11	STEEL PIPE 1 1/2" OD NOM
055200.R41	BRACKET SUPPORT 60" OC MAX
055200.R42	WALL BRACKET FILLER PLATE
055200.R47	BALUSTERS
055200.W10	STEEL TOE PLATE

0 1' 2' 4' 6' 8'
1/2" = 1'-0" GRAPHIC SCALE

0 4" 1' 2' 3' 4' 5'
3/4" = 1'-0" GRAPHIC SCALE

0 6" 1' 2'
1½" = 1'-0" GRAPHIC SCALE

0 1" 5" 10" 15"
3" = 1'-0" GRAPHIC SCALE

NOTE:
IF THIS DRAWING IS LESS THAN 34" X 22"
IT IS A REDUCED SIZE DRAWING

SYM	DESCRIPTION	DATE	APPR
1	MOD P00005	05/2023	
2	MOD P00006 AND P00007	10/2025	
3	BY AMENDMENT	1/16/2026	

NAVFAC

STATE OF FLORIDA
BILLY KEITH HOLLOWAY
AR93022
01/16/2026
REGISTERED ARCHITECT
SEAL

BAMFORTH
CONSULTING ARCHITECTS

AE INFO

APPROVED
FOR COMMANDER NAVFAC 1/26/2026

ACTIVITY
Approved by J. Scott Roberts,
Asset Management Branch Head &
Supervisory Facility Planner, PWD
Beaufort, SC via email.

SATISFACTORY TO DATE	12/15/2022
DES EAD / DRW RWR / CHK BKH	
PMDM	KTB / RLH
BRANCH MANAGER	CGM
CHIEF ENG/ARCH	EJA
FP ENGINEER	DSN

NAVAL FACILITIES ENGINEERING SYSTEMS COMMAND
NAVAL FACILITIES ENGINEERING SYSTEMS COMMAND ~ MID-ATLANTIC
NORFOLK, VA
DEPARTMENT OF THE NAVY
DC CODE:
MCAS BEAUFORT
BEAUFORT, SC
P-475 AIRCRAFT MAINTENANCE HANGAR -
VOLUME 4 (PARKING GARAGE OPTION)
PARKING GARAGE - RAILING DETAILS

SCALE:	As indicated
EPROJECT NO.:	1363603
CONSTR. CONTR. NO.	
NAVFAC DRAWING NO.	12860350
SHEET	1129 OF 1412

PAE562

DRAWFORM REVISION: 25 AUGUST 2020

Autodesk Docs://2024 LWA FAT 502 F35 Maintenance Hangar/2024 F35 Maint Hangar_Parking Facility.rvt
1/14/2026 4:25:17 PM

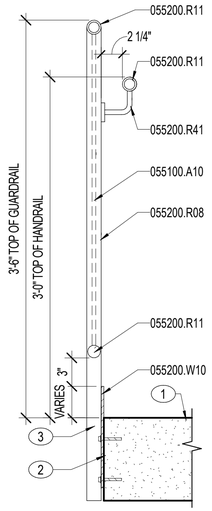

C1 GUARDRAIL WITH HANDRAIL
1 1/2" = 1'-0" PAE561

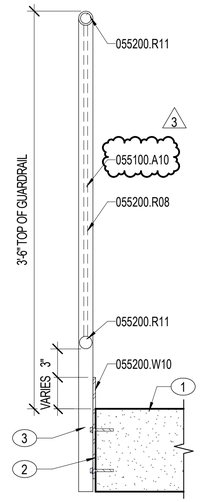

C2 GUARDRAIL SECTION
1 1/2" = 1'-0" PAE561

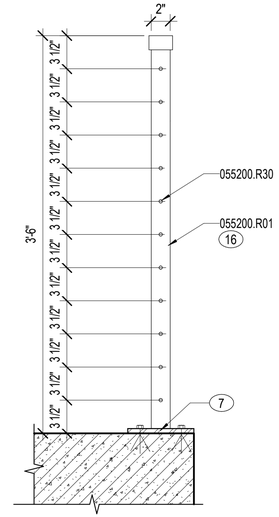

C3 CABLE GUARDRAIL
1 1/2" = 1'-0" PAE421

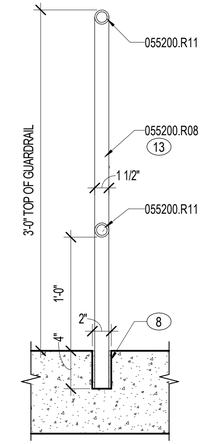

C4 STAIR GATE RAIL SECTION
1 1/2" = 1'-0" PAE563

NOTES:

SHEET NOTES:

A REFER TO SHEET PAE001 FOR ARCHITECTURAL ABBREVIATIONS AND SYMBOLS.

B DESIGN OF THE STAIRS IS ASSIGNED TO A DELEGATED ENGINEER WHO IS RESPONSIBLE FOR SIZES AND THICKNESS OF STAIR COMPONENTS TO MEET THE SPECIFIED PERFORMANCE REQUIREMENTS. INFORMATION ON THIS SHEET IS PROVIDED FOR THE OVERALL DESIGN CONCEPT AND TO SHOW CERTAIN CODE REQUIRED DIMENSIONS.

C ALL VERTICAL 1/2" DIAMETER PICKETS TO BE SPACED 4" OC MAX.

D SPACE 1-1/2" OD HANDRAIL POSTS 5'-0" OC MAX.

E ALL HANDRAILS ARE 3'-0" ABOVE THE STAIR TREAD NOSING, UNO.

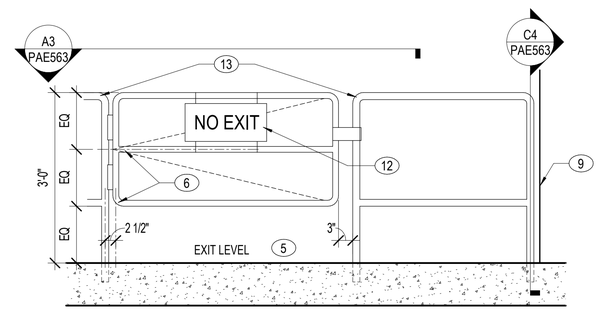

B3 TYPICAL STAIR GATE ELEVATION
3/4" = 1'-0" PAE421, PAE563

KEY NOTES (00)

1 PRECAST CONCRETE STAIR.
2 1/2" THICK STEEL PLATE.
3 1 1/2" DIA., 13 GA. STL. TUBING WELDED TO 1/2 " STL. PLATE. W/ BOLTED CONNECTION TO CONCRETE STAIR.
4 LOCATE BRACKETS AT SPACING REG'D TO SUPPORT STRUCTURAL LOAD, NOT TO EXCEED 5'-0" OC.
5 REFER TO DETAIL A3/PAE563 FOR PLAN DETAIL.
6 1 1/2" OD STEEL PIPE W/SPRING HINGES.
7 12"X12"X1/2" STEEL BASE PLATE WITH 4-3/8" DIA. EXPANSION ANCHORS WITH 2 1/2" MINIMUM EMBEDMENT
8 GROUT POST INTO CONCRETE SLAB.
9 INTERIOR FACE OF STAIR ENCLOSURE.
10 VERTICAL GATE POST AND GUARDRAIL POST.
11 CLOSURE PLATE.
12 NO EXIT SIGN.
13 GATE POSTS.
14 LINE OF RISER
15 FRONT EDGE OF TREAD BELOW
16 1 1/2" SQ. STL. TUBE W/BOLTED CONNECTION TO CONCRETE SLAB.

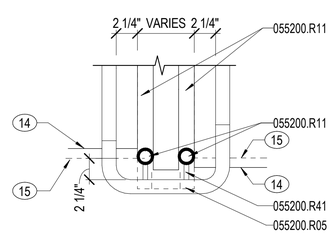

A2 HANDRAIL AND GUARDRAIL AT LANDING PLAN
1 1/2" = 1'-0" PAE411, PAE412, PAE413, PAE561

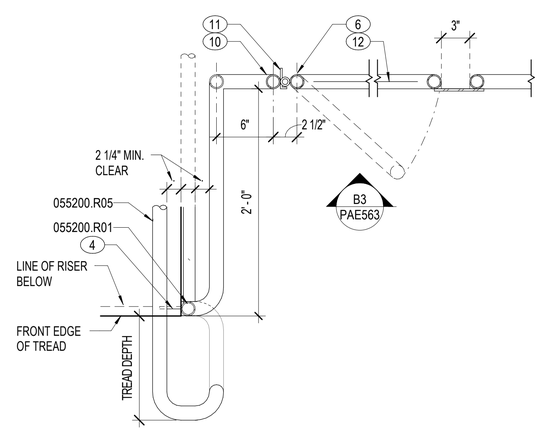

A3 HANDRAIL RETURN AND STAIR GATE PLAN
1 1/2" = 1'-0" PAE411, PAE412, PAE413, PAE561, PAE563

MATERIAL NOTES

055100.A10	STEEL TUBE
055200.R01	STEEL GUARDRAIL
055200.R05	STEEL HANDRAIL
055200.R08	STEEL GUARDRAIL POST
055200.R11	STEEL PIPE 1 1/2" OD NOM
055200.R30	ROD 3/8" DIA
055200.R41	BRACKET SUPPORT 60" OC MAX
055200.W10	STEEL TOE PLATE

0 4" 1' 2' 3' 4' 5'
3/4" = 1'-0" GRAPHIC SCALE

0 2" 10" 20" 30"
1½" = 1'-0" GRAPHIC SCALE

NOTE:
IF THIS DRAWING IS LESS THAN 34" X 22"
IT IS A REDUCED SIZE DRAWING

STM	DESCRIPTION	DATE	APPR
1	MOD P00005	05/2023	
2	MOD P00006 AND P00007	10/2025	
3	BY AMENDMENT	1/16/2026	

NAVFAC

STATE OF FLORIDA
BILLY KEITH HOLLOWAY
AR93022
01/16/2026
REGISTERED ARCHITECT
SEAL

BAMFORTH
ENGINEERING ARCHITECTS
AE INFO

APPROVED
COMM'DR, N.A.F.A.C.
FOR COMMANDER NAVFAC 1/26/2026

ACTIVITY
Approved by J. Scott Roberts,
Asset Management Branch Head &
Supervisory Facility Planner, PWD
Beaufort, SC via email.

SATISFACTORY TO DATE 12/15/2022

DES	EAD	DRW MEC	CHK BKH
PM/DM	KTB / RLH		
BRANCH MANAGER	CGM		
CHIEF ENG/ARCH	EJA		
FP ENGINEER	DSN		

NAVAL FACILITIES ENGINEERING SYSTEMS COMMAND
NORFOLK, VA
DEPARTMENT OF THE NAVY
NAVAL FACILITIES ENGINEERING SYSTEMS COMMAND ~ MID-ATLANTIC
DC CODE
MCAS BEAUFORT
BEAUFORT, SC
P-475 AIRCRAFT MAINTENANCE HANGAR - VOLUME 4 (PARKING GARAGE OPTION)
PARKING GARAGE - RAILING DETAILS

SCALE: As indicated
EPROJECT NO.: 1363603
CONSTR. CONTR. NO.
NAVFAC DRAWING NO.: 12860351
SHEET 1130 OF 1412

PAE563

DRAWFORM REVISION: 28 AUGUST 2020

Autodesk Docs://20043 MIRAT 502 755 Maintenance Hangar/20043 F35 Maint Hangar_Parking Facility.rvt
1/14/2026 4:25:17 PM

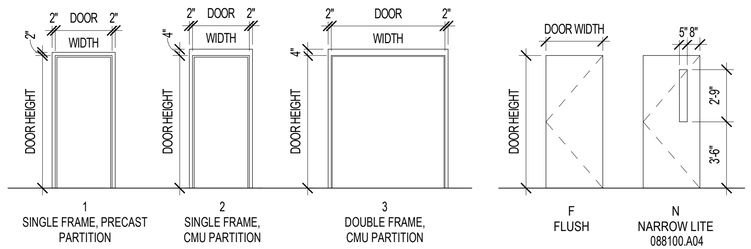

D1 DOOR FRAMES
1/4" = 1'-0"

D2 DOOR PANELS
1/4" = 1'-0"

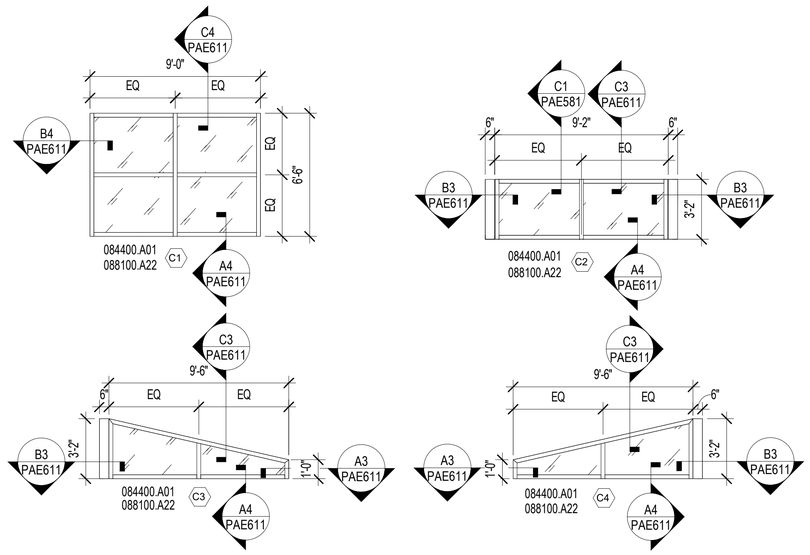

B1 CURTAIN WALL TYPES
1/4" = 1'-0"

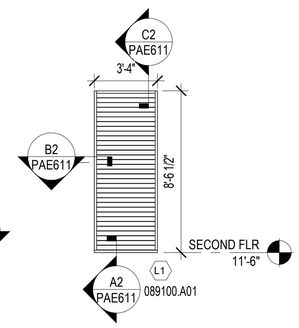

B3 LOUVER TYPE
1/4" = 1'-0"

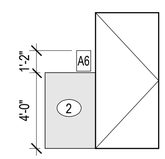

B4 SIGNAGE LAYOUT
1/4" = 1'-0"

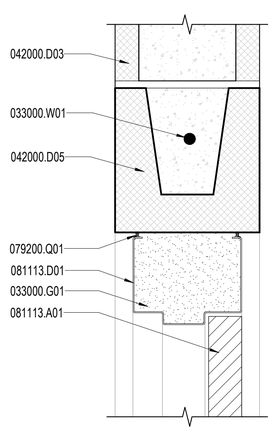

A1 DOOR HEAD @ CMU
3" = 1'-0" PAE601

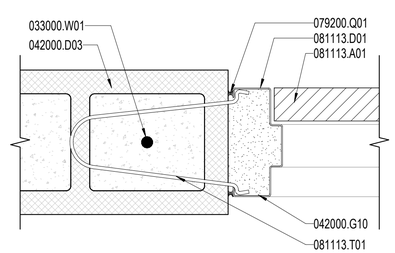

A2 DOOR JAMB @ CMU
3" = 1'-0" PAE601

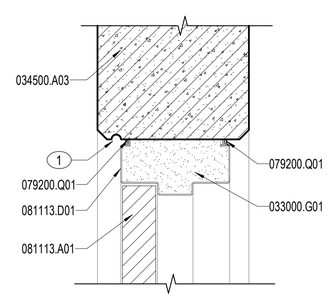

A3 DOOR HEAD @ PRECAST
3" = 1'-0" PAE601

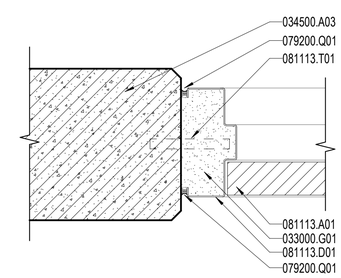

A4 DOOR JAMB @ PRECAST
3" = 1'-0" PAE601

DOOR SCHEDULE - PARKING GARAGE

DR NO		DOOR WD	DOOR WD/SEC	DOOR HT	DOOR MAT	DOOR TYPE	FRAME MAT	FRAME TYPE	RATING (MIN)	HDWR SET	DETAILS HEAD	DETAILS JAMB	RMK	ROOM STC
GROUND FLR														
P103	Pr	3'-0"		7'-0"	HM	F	HM	3	--	2.12	A1/PAE601	A2/PAE601	1, 2, 3, 5, 7	--
P104		3'-0"		7'-0"	HM	F	HM	2	--	1.17	A1/PAE601	A2/PAE601	1, 2, 3, 5, 7	--
PS101.1		3'-0"		7'-0"	HM	N	HM	1	--	5.03	A3/PAE601	A4/PAE601	1, 2, 3, 4, 5, 7	--
PS101.2		3'-0"		7'-0"	HM	N	HM	1	--	1.18	A3/PAE601	A4/PAE601	1, 2, 5, 7	--
PS101.3		3'-0"		3'-0"	STL	G3	STL		--	--	--	--	5, 7	--
PS102.1		3'-0"		7'-0"	HM	N	HM	1	--	5.03	A3/PAE601	A4/PAE601	1, 2, 3, 4, 5, 7	--
PS102.2		3'-0"		7'-0"	HM	N	HM	1	--	1.18	A3/PAE601	A4/PAE601	1, 2, 5, 7	--
PS102.3		3'-0"		3'-0"	STL	G3	STL		--	--	--	--	5, 7	--
PS103.1		3'-0"		7'-0"	HM	N	HM	1	--	5.03	A3/PAE601	A4/PAE601	1, 2, 3, 4, 5, 7	--
PS103.2		3'-0"		7'-0"	HM	N	HM	1	--	1.18	A3/PAE601	A4/PAE601	1, 2, 5, 7	--
PS103.3		3'-0"		3'-0"	STL	G3	STL		--	--	--	--	5, 7	--
PS104.1		3'-0"		7'-0"	HM	N	HM	1	--	1.18	A3/PAE601	A4/PAE601	1, 2, 5, 7	--
PS104.2		3'-0"		3'-0"	STL	G3	STL		--	--	--	--	5, 7	--
PS105	Pr	2'-6"		7'-0"	HM	F	HM	3	--	2.12	A1/PAE601	A2/PAE601	1, 2, 3, 5, 7	--
SECOND FLR														
PS201		3'-0"		7'-0"	HM	N	HM	1	--	1.18	A3/PAE601	A4/PAE601	1, 2, 5, 7	--
PS202		3'-0"		7'-0"	HM	N	HM	1	--	1.18	A3/PAE601	A4/PAE601	1, 2, 5, 7	--
PS203		3'-0"		7'-0"	HM	N	HM	1	--	1.18	A3/PAE601	A4/PAE601	1, 2, 5, 7	--
PS204		3'-0"		7'-0"	HM	N	HM	1	--	1.18	A3/PAE601	A4/PAE601	1, 2, 5, 7	--
THIRD FLR														
PS301		3'-0"		7'-0"	HM	N	HM	1	--	1.18	A3/PAE601	A4/PAE601	1, 2, 5, 7	--
PS302		3'-0"		7'-0"	HM	N	HM	1	--	1.18	A3/PAE601	A4/PAE601	1, 2, 5, 7	--
PS303		3'-0"		7'-0"	HM	N	HM	1	--	1.18	A3/PAE601	A4/PAE601	1, 2, 5, 7	--
PS304		3'-0"		7'-0"	HM	N	HM	1	--	1.18	A3/PAE601	A4/PAE601	1, 2, 5, 7	--

ROOM FINISH SCHEDULE

ROOM NAME & NUMBER	FLOOR	WALLS	CEILING	REMARKS	PROJECT REVISION
PS10# / STAIRS	CONCS-1	PRECAST	P-3a		
P103 / SOLAR INV	CONCS-1	P-1e	EXP		
P104 / ELEC	CONCS-1	P-1e	EXP		
P105 / SPKLR	CONCS-1	P-1e	EXP		

INTERIOR ROOM SIGN SCHEDULE - A1

ROOM NUMBER	ROOM NAME	SIGN TYPE	SIGN MESSAGE	REMARKS	PROJECT REVISION
P103	SOLAR INV	A1	SOLAR INVERTER		
P104	ELEC	A1	ELECTRICAL		
P105	SPKLR	A1	SPRINKLER ROOM		

INTERIOR SIGN SCHEDULE - B2

ROOM NUMBER	ROOM NAME	SIGN TYPE	SIGN MESSAGE	REMARKS	PROJECT REVISION
PS101	STAIR 1	B2	EXIT		
PS102	STAIR 2	B2	EXIT		
PS103	STAIR 3	B2	EXIT		
PS104	STAIR 4	B2	EXIT		

INTERIOR SIGN SCHEDULE - A6

ROOM NUMBER	ROOM NAME	SIGN TYPE	SIGN MESSAGE 1	SYMBOL	SIGN MESSAGE 2	REMARKS	PROJECT REVISION
PS101	STAIR 1	A6	STAIR 1	STAIR ADA	EXIT		
PS101	STAIR 1	A6	STAIR 1	STAIR ADA	EXIT		
PS102	STAIR 2	A6	STAIR 2	STAIR ADA	EXIT		
PS102	STAIR 2	A6	STAIR 2	STAIR ADA	EXIT		
PS103	STAIR 3	A6	STAIR 3	STAIR ADA	EXIT		
PS103	STAIR 3	A6	STAIR 3	STAIR ADA	EXIT		
PS104	STAIR 4	A6	STAIR 4	STAIR ADA	EXIT		
PS201	STAIR 1	A6	STAIR 1	STAIR ADA	EXIT		
PS202	STAIR 2	A6	STAIR 2	STAIR ADA	EXIT		
PS203	STAIR 3	A6	STAIR 3	STAIR ADA	EXIT		
PS204	STAIR 4	A6	STAIR 4	STAIR ADA	EXIT		
PS301	STAIR 1	A6	STAIR 1	STAIR ADA	EXIT		
PS302	STAIR 2	A6	STAIR 2	STAIR ADA	EXIT		
PS303	STAIR 3	A6	STAIR 3	STAIR ADA	EXIT		
PS304	STAIR 4	A6	STAIR 4	STAIR ADA	EXIT		

NOTES:

SHEET NOTES:

A REFER TO SHEET PAE001 FOR ARCHITECTURAL ABBREVIATIONS AND SYMBOLS.
B DOOR HARDWARE SETS ARE SPECIFIED IN SPECIFICATION SECTION 08 71 00.
C PROVIDE DRIP STRIP AT ALL EXTERIOR DOORS NOT PROTECTED FROM WEATHER.
D DOOR FRAME PROFILES ARE GENERIC. REFER TO SPECIFICATIONS FOR PERFORMANCE REQUIREMENTS.
E ALUMINUM CURTAINWALL PROFILES ARE GENERIC. REFER TO SPECIFICATIONS FOR PERFORMANCE REQUIREMENTS.
F LOUVER PROFILES ARE GENERIC. REFER TO SPECIFICATIONS FOR PERFORMANCE REQUIREMENTS.
G ALL EXTERIOR DOOR GLAZING TO BE LAMINATED (088100.A08) UNO. REFER TO SPECIFICATIONS FOR GLAZING CRITERIA.
H ALL EXTERIOR GLAZING TO BE TINTED, INSULATING LAMINTED GLASS (088100.A22) UNO.
I REFER TO SPECIFICATION SECTION 08 11 00 FOR GLAZING SCHEDULES AND DESCRIPTION.
J DOOR DIMENSIONS ARE NOMINAL. FIELD VERIFY ALL DIMENSIONS AND COORDINATE ROUGH OPENING SIZES.
K REFER TO PAE100 SERIES PARKING GARAGE OVERALL FLOOR PLANS FOR ABA INTERIOR ROOM SIGN TYPE LOCATIONS.
L REFER TO VOL 2A HANGAR, AF610 FINISH IDENTIFICATION SERIES FOR ROOM FINISHES.
M REFER TO VOLUME 2A FOR SIGNAGE ELEVATIONS. SIGN FABRICATOR TO VERIFY THE MESSAGE SCHEDULE WITH THE CONTRACTING OFFICER PRIOR TO FABRICATION.

DOOR REMARKS

1 SURFACE CLOSER.
2 PERIMETER DOOR GASKETING.
3 DOOR SWEEP.
4 RAIN GUARD.
5 EXIT DEVICE.
6 GATE INSIDE STAIRWELL. REFER TO DETAILS A3/PAE563 AND B3/PAE563.
7 DOOR TO BE HOT-DIPPED ZINC-COATED AND FACTORY-PRIMED FINISH.

KEY NOTES (00)

1 PRECAST PANEL DRIP EDGE.
2 REFER TO C4 / PAG701 MESSAGE LAYOUT FOR GRAPHIC LAYOUT

MATERIAL NOTES

033000.G01	GROUT SOLID
033000.W01	REINFORCING STEEL
034500.A03	PRECAST CONCRETE WALL PANEL
042000.D03	CMU 8"
042000.D05	CMU BOND BEAM
042000.G10	GROUT SOLID
079200.Q01	JOINT SEALANT
081113.A01	STEEL DOOR
081113.D01	STEEL DOOR FRAME
081113.T01	MASONRY ANCHOR
084400.A01	GLAZED ALUMINUM CURTAIN WALL ASSEMBLY
088100.A04	CLEAR TEMPERED GLASS
088100.A22	INSULATING-LAMINATED GLASS UNIT
089100.A01	EXTRUDED ALUMINUM WALL LOUVER

0 2" 4" 8" 1'
3" = 1'-0" GRAPHIC SCALE

0 1' 5' 10' 15'
1/4" = 1'-0" GRAPHIC SCALE

NOTE:
IF THIS DRAWING IS LESS THAN 34" X 22"
IT IS A REDUCED SIZE DRAWING

SYM	DESCRIPTION	DATE	APPR
1	MOD P00005	05/2023	
2	MOD P00006 AND P00007	10/2025	
3	BY AMENDMENT	1/16/2026	

NAVFAC

STATE OF FLORIDA
BILLY KEITH HOLLOWAY
AR93022
01/16/2026
REGISTERED ARCHITECT
SEAL

BAMFORTH
CONSULTING ARCHITECTS

AE INFO

APPROVED
COMM. R.A. R.C.
FOR COMMANDER NAVFAC 1/26/2026
ACTIVITY Approved by J. Scott Roberts, Asset Management Branch Head & Supervisory Facility Planner, PWD Beaufort, SC via email.
SATISFACTORY TO DATE 12/15/2022
DES EAD DRW RWR CHK BKH
PMDM KTB / RLH
BRANCH MANAGER CGM
CHIEF ENG/ARCH EJA
FP ENGINEER DSN

DEPARTMENT OF THE NAVY
NAVAL FACILITIES ENGINEERING SYSTEMS COMMAND
DC CODE
MCAS BEAUFORT
NAVAL FACILITIES ENGINEERING SYSTEMS COMMAND ~ MID-ATLANTIC NORFOLK, VA
BEAUFORT, SC
P-475 AIRCRAFT MAINTENANCE HANGAR - VOLUME 4 (PARKING GARAGE OPTION)
PARKING GARAGE - DOOR SCHEDULE / DOOR/DOOR FRAME, CURTAINWALL, AND LOUVER ELEVATIONS / DOOR DETAILS

SCALE: As indicated
EPROJECT NO.: 1363603
CONSTR. CONTR. NO.
NAVFAC DRAWING NO. 12860354
SHEET 1133 OF 1412

PAE601

DRAWFORM REVISION: 28 AUGUST 2020

Autodesk Docs://20043 MRAX 500 F35 Maintenance Hangar/20043 F35 Maint Hangar_Parking Facility.rvt
1/14/2026 4:25:18 PM

SINGLE LINE DIAGRAM

SYMBOL	DESCRIPTION
1AHN1	PANELBOARD. WHEN ADDITIONAL SYMBOL(S) ARE INCLUDED, THEY INDICATE THE FOLLOWING: MAIN CIRCUIT BREAKER. SEE PANEL SCHEDULE FOR SIZE. IF NOT PRESENT, PANELBOARD WITH MAIN LUGS ONLY.
3P 100 A	CIRCUIT BREAKER WITH NUMBER OF POLES AND TRIP RATING AS INDICATED.
3P 100 A ETM L	ELECTRONIC TRIP CIRCUIT BREAKER INTEGRAL POWER MONITORING METER. NUMBER OF POLES AND TRIP RATING AS INDICATED. METERING IDENTIFICATION CODES AS FOLLOWS: L - LIGHTING LOADS R - RECEPTACLE LOADS M - HVAC LOADS
	ADDITIONAL CIRCUIT BREAKER SUBSCRIPTS INDICATE THE FOLLOWING: ET - SOLID STATE ELECTRONIC TRIP CIRCUIT BREAKER WITH FIELD ADJUSTABLE LONG TIME PICKUP, SHORT TIME PICKUP, SHORT TIME DELAY, AND INSTANTANEOUS TRIP FUNCTIONS. INCLUDE ADJUSTABLE GROUND FAULT PICKUP AND GROUND FAULT DELAY TRIP FUNCTIONS WHERE GROUND FAULT PROTECTION IS INDICATED.
M	MULTIFUNCTION DIGITAL POWER CIRCUIT MONITOR.
Δ Y	POWER TRANSFORMER WITH DELTA CONNECTED PRIMARY, WYE CONNECTED SECONDARY AND RATING AS INDICATED.
SPD	PARALLEL CONNECTED SURGE PROTECTIVE DEVICE. SEE SURGE PROTECTIVE DEVICE SCHEDULE ON SHEET PEP800.
	FEEDER CONTINUATION SYMBOL
A1	FEEDER REFERENCE
OEP600	SHEET ON WHICH FEEDER IS CONTINUED
1PBLD1	EQUIPMENT OR PANEL TO WHICH FEEDER IS CONNECTED

POWER DISTRIBUTION EQUIPMENT CODES

1PBLD1

EQUIPMENT CODE:
- 1,2,3 - SEQUENCE
- N - NORMAL BRANCH
- D - DISTRIBUTION PANEL (WHERE PRESENT)
- L - 208Y/120V
- B - BUILDING AREA
- BUILDING DESIGNATION:
- P - PARKING GARAGE
- FLOOR LEVEL

POWER DISTRIBUTION

SYMBOL	DESCRIPTION	MOUNTING
	SURFACE MOUNTED PANELBOARD	72" AFF TO TOP
	SURFACE MOUNTED DISTRIBUTION PANELBOARD	72" AFF TO TOP
	GROUNDING BUS BAR, SUBSCRIPT INDICATES NAME. REFER TO C1/PEP501 FOR DETAIL.	18" AFF TO TOP
30A 3R	600V, 3P, NON-FUSED DISCONNECT SWITCH. ALL DISCONNECT SWITCHES SHALL BE NEMA 1 UNLESS OTHERWISE INDICATED. SUBSCRIPTS INDICATE THE FOLLOWING: 30A - AMPERE RATING 3R - NEMA ENCLOSURE OTHER THAN NEMA 1 (3R, 4X, ETC...)	72" AFF TO TOP

WIRING DEVICES

NOTES: ALL MOUNTING HEIGHTS ARE TO TOP, UON

SUBSCRIPTS FOR RECEPTACLES INDICATE THE FOLLOWING:
- G - RECEPTACLE WITH INTEGRAL GFCI.
- WP - RECEPTACLE WITH WEATHER RESISTANT MARKING (WR) MOUNTED IN A IN-USE WEATHER PROOF ENCLOSURE.
- +48"- MOUNT AT 48" AFF TO CENTER. OTHER MOUNTING HEIGHTS AS INDICATED.

SYMBOL	DESCRIPTION	MOUNTING
	20A, 125V DUPLEX RECEPTACLE.	18" AFF

CONDUIT AND CONDUCTORS

SYMBOL	DESCRIPTION
	BRANCH CIRCUIT WIRING IN CONDUIT. 1/2"C - 2#12 + 1#12 GND UON. PROVIDE ADDITIONAL SWITCHED CONDUCTORS OR TRAVELER CONDUCTORS FOR LIGHTING CIRCUITS AS REQUIRED TO SUPPORT THE INDICATED SWITCHING.
	HOMERUN TO PANELBOARD: 1PBLN1 - 1,3,5 CIRCUIT DESIGNATION. PANELBOARD DESIGNATION.

EQUIPMENT CONNECTIONS

SYMBOL	DESCRIPTION	MOUNTING
E FCU/A	CONNECTION TO EQUIPMENT LEADS, TERMINAL STRIPS OR CONTROL PANEL INCLUDING ALL CONDUCTORS, CONDUIT, FLEXIBLE CONDUIT, JUNCTION BOXES, CONNECTORS, FITTINGS, ETC., REQUIRED FOR PROPER CONNECTION. COORDINATE EXACT LOCATION WITH THE SUPPLIED EQUIPMENT. SUBSCRIPT INDICATES EQUIPMENT IDENTIFICATION.	AS REQUIRED

LIGHTNING PROTECTION SYSTEM

SYMBOL	DESCRIPTION
	AIR TERMINAL. SUBSCRIPTS INDICATE THE FOLLOWING: A - STANDING SEAM METAL ROOF MOUNTED AIR TERMINAL. SEE C2/PEQ501 FOR DETAIL. B - ADHESIVE TYPE AIR TERMINAL MOUNTED ON PHOTOVOLTAIC CANOPY STRUCTURE. SEE A4/PEQ501 FOR DETAIL. TYPE "B" AIR TERMINALS SHALL BE 24" TALL.
	LIGHTNING PROTECTION SYSTEM ROOF CONDUCTOR.
GL	LIGHTNING PROTECTION SYSTEM GROUND LOOP CONDUCTOR. BURY IN DIRECT CONTACT WITH EARTH AT 24" BELOW FINISHED GRADE.
	GROUND RODS BONDED TO GROUND LOOP CONDUCTOR. SEE A2/PEQ501 FOR DETAIL.
	BONDING CONNECTION.
DNP	DOWN CONDUCTOR. SEE SHEET PEQ131 FOR REQUIREMENTS.

MISCELLANEOUS

SYMBOL	DESCRIPTION	MOUNTING
00	KEY NOTE SYMBOL.	NA
	ELECTRICAL GROUND	NA
	CONDUCTOR CONNECTION	NA

LINE TYPES

LINE TYPE	DESCRIPTION
	SOLID LINES INDICATE EQUIPMENT PROVIDED IN THIS CONTRACT.
	SCREENED LINES INDICATE EXISTING EQUIPMENT.
	DASHED LINES INDICATE EQUIPMENT REMOVED IN THIS CONTRACT.
	HATCH LINES INDICATE EQUIPMENT REMOVED IN THIS CONTRACT.

LUMINAIRES

NOTES:
1. SEE LIGHTING FIXTURE SCHEDULE FOR FIXTURE TYPES.
2. OTHER FIXTURE DIMENSIONS AND SHAPES ARE AS INDICATED ON LIGHTING PLANS.

BATTERY INVERTER IDENTIFICATION (TYPICAL FOR ALL FIXTURES)
- NORMAL POWER.
- BATTERY INVERTER
- NORMAL POWER.
- BATTERY INVERTER

SYMBOL	DESCRIPTION	SYMBOL
	PENDANT MOUNTED INDUSTRIAL LUMINAIRE.	CEILING
	WALL MOUNTED LUMINAIRE.	WALL
	WALL MOUNTED LUMINAIRE.	WALL
	PENDANT MOUNTED AREA LIGHT.	CEILING
	EXIT SIGN. SHADED PORTION DENOTES FACE(S). DIRECTIONAL ARROWS AS INDICATED.	CEILING OR PENDANT
	EXIT SIGN. SHADED PORTION DENOTES FACE(S). DIRECTIONAL ARROWS AS INDICATED.	4" ABOVE TOP OF DOOR FRAME TO BOTTOM OF FIXTURE

LINE-VOLTAGE LIGHTING CONTROL DEVICES

NOTES:
1. ALL WIRING SHALL BE #12 AWG IN 1/2" CONDUIT, MINIMUM.
2. PROVIDE EQUIPMENT GROUNDING CONDUCTOR FOR ALL CIRCUITS.

SYMBOL	DESCRIPTION	MOUNTING
S	20A, 120/277V SINGLE POLE SWITCH, UON. SUBSCRIPTS INDICATE THE FOLLOWING: a,b - SWITCH LEG BEING CONTROLLED	48" AFF TO CENTER, UON

RELAY-BASED LIGHTING CONTROL DEVICES

NOTES:
1. REFER TO C1/PEL601 FOR RELAY-BASED CONTROL SYSTEM RISER DIAGRAM.
2. REFER TO SHEET PEL601 FOR RELAY PANEL SCHEDULES.

SYMBOL	DESCRIPTION	MOUNTING
PLRP1	RELAY PANEL. PANEL IDENTIFICATION INDICATES THE FOLLOWING: LRP 1 1,2,3...- SEQUENCE OF PANELS LRP - LIGHTING RELAY PANEL	SURFACE AT 72" AFF TO TOP.
	DIGITAL INFRARED ONLY, OCCUPANCY SENSOR CONNECTED TO RELAY-BASED LIGHTING CONTROL SYSTEM. SUBSCRIPTS INDICATE THE FOLLOWING: a,b - SWITCHLEG(S)	CEILING.
	DIGITAL INTERIOR DAYLIGHT SENSOR CONNECTED TO RELAY-BASED LIGHTING CONTROL SYSTEM. SUBSCRIPTS INDICATE THE FOLLOWING: a,b - SWITCHLEG(S)	CEILING.
PE	EXTERIOR PHOTOCELL CONNECTED TO RELAY-BASED LIGHTING CONTROL SYSTEM.	AS INDICATED.

20A 120V RECEPTACLE BRANCH CIRCUIT HOMERUN SCHEDULE

HOMERUN LENGTH	CONDUCTOR SIZE
0-50 FEET	#12 AWG COPPER
51-100 FEET	#10 AWG COPPER
101-150 FEET	#8 AWG COPPER

NOTES:
A. THE CONDUCTOR SIZES SHOWN ARE FOR THE PHASE, NUETRAL AND GROUND CONDUCTORS.
B. FINAL CONNECTIONS TO RECEPTACLES WILL BE #12 AWG COPPER MAXIMUM. PROVIDE JUNCTION BOX ABOVE FINISHED ACCESSIBLE CEILING AS CLOSE AS POSSIBLE TO THE RECEPTACLES SERVED FOR CONDUCTOR TRANSISTIONS.

GENERAL NOTES

A. INSTALL ALL EQUIPMENT AND DEVICES AT THE HEIGHT INDICATED. REFER TO ARCHITECTURAL INTERIOR ELEVATIONS FOR SPECIAL MOUNTING HEIGHTS AND LOCATIONS OF ELECTRICAL AND COMMUNICATIONS DEVICES. MOUNTING HEIGHTS AND LOCATIONS INDICATED ON ARCHITECTURAL ELEVATIONS TAKE PRECEDENCE OVER OTHER MOUNTING HEIGHTS AND LOCATIONS.
B. LUMINAIRE TYPES INDICATED AS FOLLOWS: UPPER CASE LETTER WITH NUMERAL DENOTES FIXTURE TYPE (SEE LUMINAIRE SCHEDULE), LOWER CASE LETTER (IF SHOWN) DENOTES SWITCHING ARRANGEMENT.
C. ALL MATERIALS AND EQUIPMENT WILL BE LISTED AS COMPLYING WITH THE APPLICABLE STANDARDS OF UNDERWRITER'S LABORATORIES, INC OR OTHER APPROVED LISTING AGENCIES.
D. CONDUCTOR AMPACITIES ARE BASED ON 60° C COPPER FOR #12 AWG THROUGH #1 AWG CONDUCTORS. CONDUCTOR AMPACITIES ARE BASED ON 75° C COPPER FOR CONDUCTORS LARGER THAN #1 AWG.
E. ALL CONDUIT SIZES ARE BASED ON ELECTRICAL METALLIC TUBING (EMT) WITH TYPE THHN/THWN COPPER CONDUCTORS. ADJUST CONDUIT SIZE AS REQUIRED FOR OTHER CONDUIT MATERIALS AND CONDUCTOR TYPES.
F. THE PANELBOARD SUPPLIER SHALL BE RESPONSIBLE FOR PROVIDING OVERCURRENT PROTECTIVE DEVICES THAT ARE SELECTIVELY COORDINATED. REFER TO SPECIFICATION SECTION 26 28 01.00 10 FOR REQUIREMENTS.
G. ADJUST MOUNTING HEIGHTS FOR CEILING MOUNTED EXIT SIGNS AS REQUIRED TO PROVIDE PROPER VISIBILITY. PROVIDE PENDANTS WHERE REQUIRED TO LOWER MOUNTING HEIGHTS AS REQUIRED TO COORDINATE WITH DROP SOFFITS THAT MAY OBSCURE THE EXIT SIGNS.
H. WHEN CONTRACTOR FURNISHED EQUIPMENT INCLUDING BUT NOT LIMITED TO ARCHITECTURAL HARDWARE (I.E. WINDOW SHADES, OVERHEAD COILING DOORS AND GRILLS, POWER OPERATED DOORS, ETC...) AND HVAC EQUIPMENT SIZE OR ELECTRICAL CHARACTERISTICS PROVIDED DIFFERS FROM SIZE OR ELECTRICAL CHARACTERISTICS INDICATED OR SPECIFIED, MAKE ALL NECESSARY ADJUSTMENTS TO ELECTRICAL BOXES, CONDUIT, WIRING, DISCONNECT DEVICES, BRANCH CIRCUIT PROTECTION, AND RELATED ELECTRICAL DISTRIBUTION EQUIPMENT INCLUDING ANY ELECTRICAL REDESIGN AS REQUIRED TO ACCOMMODATE EQUIPMENT ACTUALLY PROVIDED.
I. PROVIDE SEPARATE NEUTRAL CONDUCTOR FOR EACH 277V AND 120V BRANCH CIRCUIT, UON. MULTIPLE 20A BRANCH CIRCUITS FROM THE SAME PANELBOARD MAY BE COMBINED IN A SINGLE 1/2" CONDUIT HOME RUN, MAXIMUM OF (3) CIRCUIT PER HOME RUN.
J. SEE B4/PEP501 FOR EQUIPMENT IDENTIFICATION LABEL DETAIL.
K. SEE A4/PEP501 FOR MISCELLANEOUS EQUIPMENT IDENTIFICATION LABEL DETAIL.
L. PROVIDE DISCONNECTING MEANS FOR MISCELLANEOUS MOTOR LOADS AS REQUIRED BY NFPA 70.
M. PROVIDE CORROSION PROTECTION AND CONTROL FOR BUILDING SYSTEMS AND COMPONENTS IN ACCORDANCE WITH ENVIRONMENTAL SEVERITY CLASSIFICATION (ESC) C4 IN ACCORDANCE TO UFC 1-200-01, DOD BUILDING CODE, CHAPTER 4. THESE REQUIREMENTS SHALL APPLY TO ALL OPEN AREAS WITHIN THE GARAGE STRUCTURE. WITHIN THESE AREAS, ALL CONDUITS SHALL BE RIGID GALVANIZED STEEL, AND ALL FASTENERS, FITTINGS, AND HANGERS SHALL BE TYPE 316 STAINLESS STEEL. COMPLY WITH ALL OTHER APPLICABLE SPECIFICATION REQUIREMENTS. 3

ABBREVIATIONS

A	AMPERES	JB	JUNCTION BOX
AFC	ABOVE FINISHED CEILING	KAIC	KILO-AMPERES INTERRUPTING CAPACITY
AFF	ABOVE FINISHED FLOOR		
AFG	ABOVE FINISHED GRADE	KV	KILO-VOLTS
AHU	AIR HANDLING UNIT	KVA	KILO-VOLTS-AMPERES
AIC	AMPERES INTERRUPTING CAPACITY	KVAR	KILO-VOLTS-AMPERES REACTIVE
ATS	AUTOMATIC TRANSFER SWITCH	KW	KILO-WATTS
AWG	AMERICAN WIRE GAUGE	KWH	KILO-WATT-HOURS
BFC	BELOW FINISHED CEILING	LAN	LOCAL AREA NETWORK
BFG	BELOW FINISHED GRADE	LED	LIGHT-EMITTING DIODE
C	CONDUIT	LTG	LIGHTING
CAB	CABINET	m	METER
CATV	CABLE TELEVISION	mm	MILLIMETER
CCTV	CLOSED CIRCUIT TELEVISION	MAX	MAXIMUM
CH	CHILLER	MCB	MAIN CIRCUIT BREAKER
CKT	CIRCUIT	MCC	MOTOR CONTROL CENTER
CL	CENTERLINE	MCP	MOTOR CIRCUIT PROTECTOR
CLG	CEILING	MFR	MANUFACTURER
CT's	CURRENT TRANSFORMERS	MIN	MINIMUM
CU	COPPER	MISC	MISCELLANEOUS
DISC	DISCONNECT(ING)	MTR	MOTOR
DWG	DRAWING(S)	MTD	MOUNTED
EA	EACH	MTG	MOUNTING
EF	EXHAUST FAN	MTS	MANUAL TRANSFER SWITCH
EMT	ELECTRICAL METALLIC TUBING	N.C.	NORMALLY CLOSED
EQUIP	EQUIPMENT	N.O.	NORMALLY OPEN
EUH	ELECTRIC UNIT HEATER	NA	NOT APPLICABLE
EWC	ELECTRIC WATER COOLER	NC	NURSE CALL
EWH	ELECTRIC WATER HEATER	NEC	NATIONAL ELECTRICAL CODE
EXH	EXHAUST	NFPA	NATIONAL FIRE PROTECTION ASSOCIATION
EXIST	EXISTING		
FA	FIRE ALARM	PNL	PANEL
FLUOR	FLUORESCENT	PVC	POLYVINYL CHLORIDE
G	GROUND	REC	RECEPTACLE
GEN	ENGINE GENERATOR SET	RGS	RIGID GALVANIZED STEEL
GFI	GROUND FAULT INTERRUPTER	SF	SUPPLY FAN
GFCI	GROUND FAULT CIRCUIT INTERRUPTER	TEL	TELEPHONE
GFGI	GOVERNMENT FURNISHED, GOVERNMENT INSTALLED	TYP	TYPICAL
		UH	UNIT HEATER
GFP	GROUND FAULT PROTECTION	UON	UNLESS OTHERWISE NOTED
GND	GROUND	V	VOLTS
HGT	HEIGHT	VA	VOLT-AMPERES
HOA	HAND-OFF-AUTOMATIC	VAV	VARIABLE AIR VOLUME UNIT
HP	HORSEPOWER	W	WATTS
HVAC	HEATING/VENTILATING / AIR CONDITIONING	WAP	WIRELESS ACCESS POINT
		WP	WEATHER PROOF
HV	HIGH VOLTAGE	XFMR	TRANSFORMER
INC	INCANDESCENT		

NOTE:
IF THIS DRAWING IS LESS THAN 34" X 22"
IT IS A REDUCED SIZE DRAWING

STM	DESCRIPTION	DATE	APPR
1	MOD P00005	05/2023	
2	MOD P00006 AND MOD P00007	10/2025	
3	BY AMENDMENT	1/16/2026	

NAVFAC

NICHOLAS G. ZUBRZYCKI LICENSE No. 64239 STATE OF FLORIDA PROFESSIONAL ENGINEER 01/16/2026

BAMFORTH ENGINEERS & ARCHITECTS

APPROVED
FOR COMMANDER NAVFAC 1/26/2026

ACTIVITY
Approved by J. Scott Roberts, Asset Management Branch Head & Supervisory Facility Planner, PWD Beaufort, SC via email.

SATISFACTORY TO DATE 12/15/2022

DES RLW | DRW RLW | CHK KLM
PMDM KTB / RLH
BRANCH MANAGER JAS
CHIEF ENG/ARCH EJA
FP ENGINEER DSN

NAVAL FACILITIES ENGINEERING SYSTEMS COMMAND
NORFOLK, VA

DEPARTMENT OF THE NAVY
NAVAL FACILITIES ENGINEERING SYSTEMS COMMAND ~ MID-ATLANTIC
DC CORE
MCAS BEAUFORT

BEAUFORT, SC
P-475 AIRCRAFT MAINTENANCE HANGAR - VOLUME 4 (PARKING GARAGE OPTION)

ELECTRICAL LEGEND AND ABBREVIATIONS- VOLUME 4

SCALE: As indicated
EPROJECT NO.: 1363603
CONSTR. CONTR. NO.
NAVFAC DRAWING NO. 12860393
SHEET 1172 OF 1412

PEG001

DRAWFORM REVISION: 25 AUGUST 2020

Autodesk Docs://2042 NAFAI 320 F35 Maintenance Hangar/2042-F35 maintenance hangar_Parking Facility-EL-R1/T2024.rvt
1/14/2026 3:59:13 PM

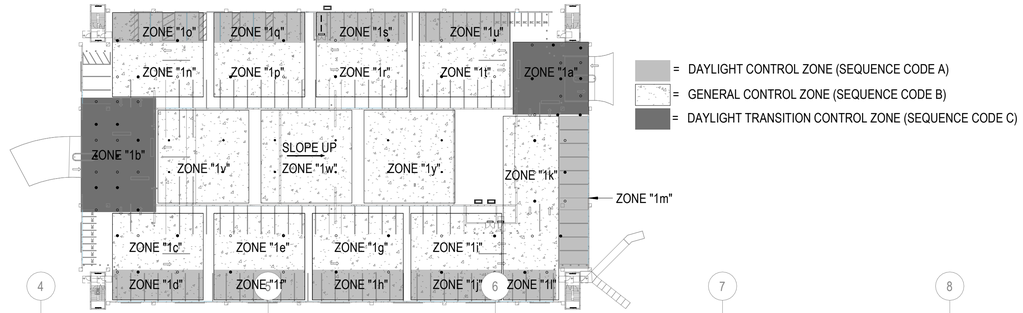

D2 LIGHTING PLAN, GROUND FLOOR, OVERALL - LIGHTING CONTROL ZONES

NOT TO SCALE

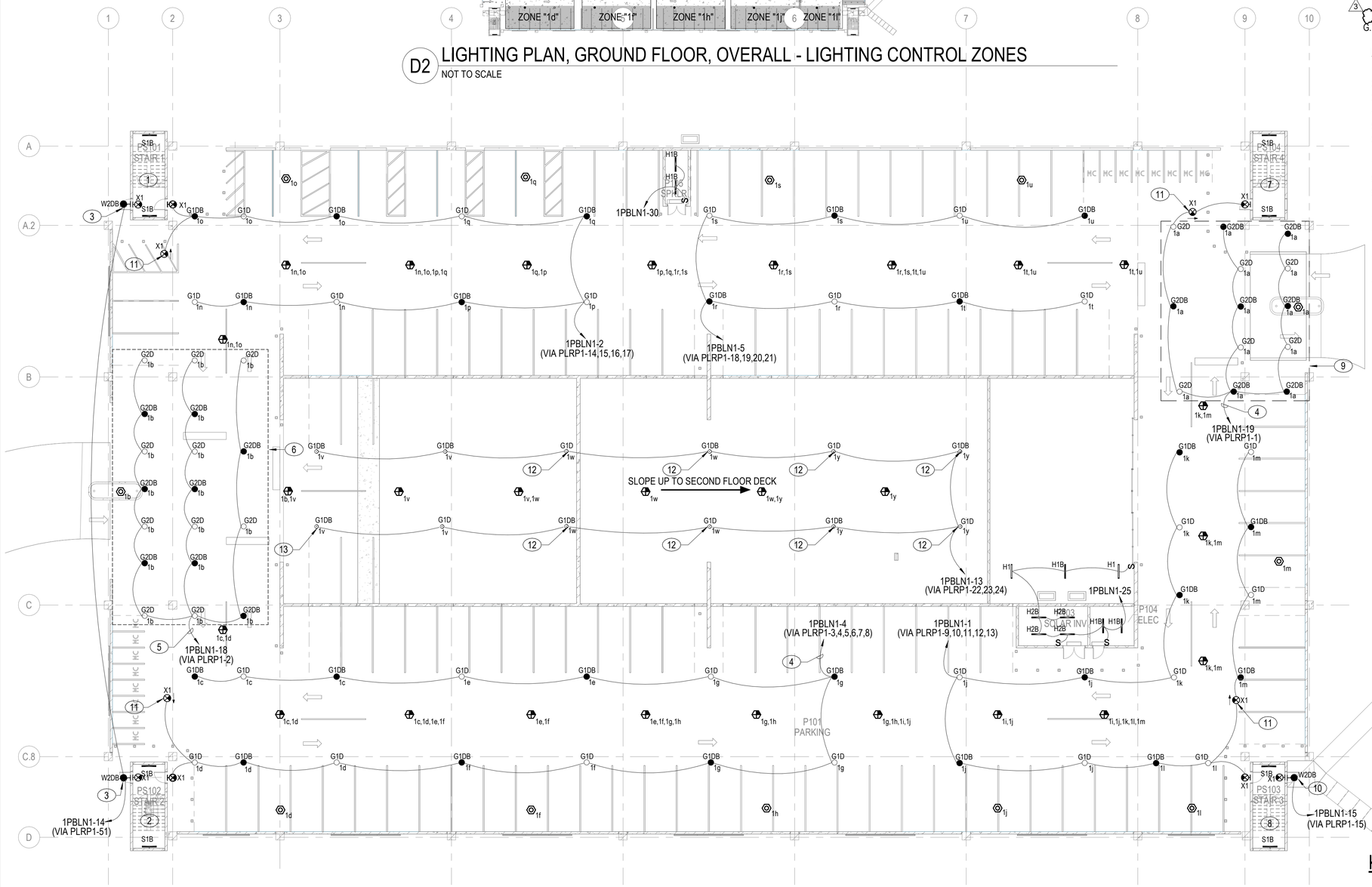

A1 LIGHTING PLAN, GROUND FLOOR, OVERALL

1/16" = 1'-0"

NOTES:

SHEET NOTES:

A. LIGHTING FIXTURES G1D AND G1DB WILL BE CONTROLLED VIA LIGHTING RELAY PANEL "PLRP1" LOCATED IN ELECTRICAL ROOM P104. REFER TO SHEET PEL601 FOR RELAY PANEL SYSTEM WIRING DIAGRAM AND SCHEDULES.
B. ADJUST MOUNTING HEIGHTS FOR CEILING MOUNTED EXIT SIGNS AS REQUIRED TO PROVIDE PROPER VISIBILITY. PROVIDE PENDANTS WHERE REQUIRED TO LOWER MOUNTING HEIGHTS AS REQUIRED TO COORDINATE WITH STRUCTURE THAT MAY OBSCURE THE EXIT SIGNS.
C. EXTERIOR LIGHTING FIXTURES WILL BE CONTROLLED VIA LIGHTING RELAY PANEL "PLRP1" LOCATED IN ELECTRICAL ROOM P104.
D. PROVIDE AN UNSWITCHED PHASE CONDUCTOR TO ALL EMERGENCY BATTERY BACK-UP LIGHTING FIXTURES AND EXIT SIGNS.
E. REFER TO SHEET PEG001 FOR LIGHTING FIXTURE SYMBOLS LEGEND. REFER TO SHEET PEL701 FOR LIGHTING FIXTURE SCHEDULE.
F. ALL VACANCY SENSORS AND DAYLIGHT SENSORS IN THE PARKING GARAGE SHALL BE UL LISTED FOR EXTERIOR USE AND SUITABLE FOR CORROSIVE ENVIRONMENTS. 3
G. REFER TO DETAIL D2/PEL101 FOR LIGHTING CONTROL ZONES DIAGRAM.

KEY NOTES (00)

1 SEE A1/PEL301 FOR MOUNTING HEIGHTS AND CIRCUIT INFORMATION.
2 SEE A3/PEL301 FOR MOUNTING HEIGHTS AND CIRCUIT INFORMATION.
3 MOUNT FIXTURE AT 3" ABOVE TOP OF DOOR FRAME TO BOTTOM.
4 1/2"C - (2)#10 + (1)#10 GND.
5 3/4"C - (2)#8 + (1)#8 GND.
6 DAYLIGHT TRANSITION ZONE IN THIS AREA. LIGHTS IN DAYLIGHT TRANSITION ZONE ARE EXEMPT FROM DAYLIGHTING CONTROL.
7 SEE C3/PEL301 FOR MOUNTING HEIGHTS AND CIRCUIT INFORMATION.
8 SEE C1/PEL301 FOR MOUNTING HEIGHTS AND CIRCUIT INFORMATION.
9 DAYLIGHT TRANSITION ZONE IN THIS AREA. LIGHTS IN DAYLIGHT TRANSITION ZONE ARE EXEMPT FROM DAYLIGHTING CONTROL.
10 MOUNT FIXTURE AT 3" ABOVE TOP OF DOOR FRAME TO BOTTOM.
11 SURFACE MOUNT EXIT SIGN TO THE BOTTOM OF THE STRUCTURAL TEE UNIT ABOVE.
12 LIGHTS ARE MOUNTED TO THE UNDERSIDE OF THE LEVEL 2 RAMP UP TO LEVEL 3. SEE A1/PEL302 FOR LOCATION.
13 SEE A1/PEL302 FOR FIXTURE MOUNTING DETAIL. TYPICAL FOR ALL FIXTURES.

KEYPLAN

0 10' 20' 40' 60'

1/16" = 1'-0" GRAPHIC SCALE

NOTE:
IF THIS DRAWING IS LESS THAN 34" X 22"
IT IS A REDUCED SIZE DRAWING

STM	DESCRIPTION	DATE	APPR
1	MOD P00005	05/2023	
2	MOD P00006 AND MOD P00007	10/2025	
3	BY AMENDMENT	1/16/2026	

NAVFAC

NICHOLAS G. ZUBRZYCKI LICENSE No. 64239 STATE OF FLORIDA PROFESSIONAL ENGINEER 01/16/2026

BAMFORTH ENGINEERS & ARCHITECTS

AE INFO

APPROVED
Digitally signed by J. Scott Roberts
FOR COMMANDER NAVFAC 1/26/2026

ACTIVITY
Approved by J. Scott Roberts,
Asset Management Branch Head &
Supervisory Facility Planner, PWD
Beaufort, SC via email.

SATISFACTORY TO DATE	12/15/2022
DES RLW / DRW RLW / CHK KLM	
PM/DM	KTB / RLH
BRANCH MANAGER	JAS
CHIEF ENG/ARCH	EJA
FP ENGINEER	DSN

DEPARTMENT OF THE NAVY
DC CORE
NAVAL FACILITIES ENGINEERING SYSTEMS COMMAND – MID-ATLANTIC
NAVAL FACILITIES ENGINEERING SYSTEMS COMMAND NORFOLK, VA
MCAS BEAUFORT BEAUFORT, SC
P-475 AIRCRAFT MAINTENANCE HANGAR - VOLUME 4 (PARKING GARAGE OPTION)
PARKING GARAGE - LIGHTING PLAN - GROUND FLOOR

SCALE:	As indicated
EPROJECT NO.:	1363603
CONSTR. CONTR. NO.	
NAVFAC DRAWING NO.	12860394
SHEET	1173 OF 1412

PEL101

DRAWFORM REVISION: 25 AUGUST 2020

Autodesk Docs://20245_NAFAT 520 733 Maintenance Hangar/20245 T36 asset Hangar_Parking Facility-EL-R12026.rvt
1/16/2026 3:55:25 PM

D2 LIGHTING PLAN, SECOND FLOOR, OVERALL - LIGHTING CONTROL ZONES

NOT TO SCALE

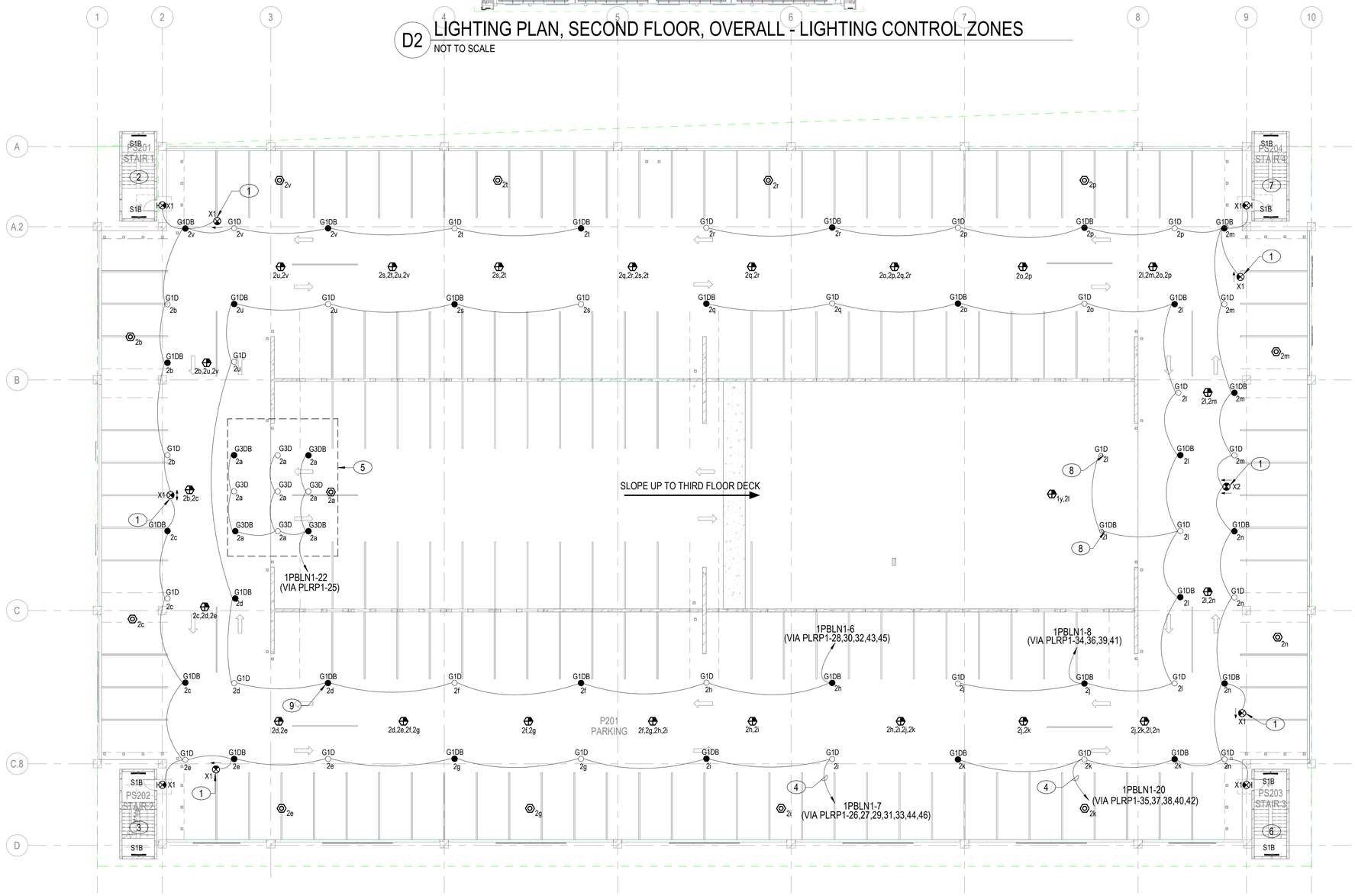

A1 LIGHTING PLAN, SECOND FLOOR, OVERALL

1/16" = 1'-0"

NOTES:

SHEET NOTES:

A. LIGHTING FIXTURES G1D AND G1DB WILL BE CONTROLLED VIA LIGHTING RELAY PANEL "PLRP1" LOCATED IN ELECTRICAL ROOM P104. REFER TO SHEET PEL601 FOR RELAY PANEL SYSTEM WIRING DIAGRAM AND SCHEDULES.
B. ADJUST MOUNTING HEIGHTS FOR CEILING MOUNTED EXIT SIGNS AS REQUIRED TO PROVIDE PROPER VISIBILITY. PROVIDE PENDANTS WHERE REQUIRED TO LOWER MOUNTING HEIGHTS AS REQUIRED TO COORDINATE WITH STRUCTURE THAT MAY OBSCURE THE EXIT SIGNS.
C. EXTERIOR LIGHTING FIXTURES WILL BE CONTROLLED VIA LIGHTING RELAY PANEL "PLRP1" LOCATED IN ELECTRICAL ROOM P104.
D. PROVIDE AN UNSWITCHED PHASE CONDUCTOR TO ALL EMERGENCY BATTERY BACK-UP LIGHTING FIXTURES AND EXIT SIGNS.
E. REFER TO SHEET PEG001 FOR LIGHTING FIXTURE SYMBOLS LEGEND. REFER TO SHEET PEL701 FOR LIGHTING FIXTURE SCHEDULE.
F. ALL VACANCY SENSORS AND DAYLIGHT SENSORS IN THE PARKING GARAGE SHALL BE UL LISTED FOR EXTERIOR USE AND SUITABLE FOR CORROSIVE ENVIRONMENTS. 3
G. REFER TO DETAIL D2/PEL101 FOR LIGHTING CONTROL ZONES DIAGRAM.

KEY NOTES (00)

1 SURFACE MOUNT EXIT SIGN TO THE BOTTOM OF THE STRUCTURAL TEE UNIT ABOVE.
2 SEE A1/PEL301 FOR MOUNTING HEIGHTS AND CIRCUIT INFORMATION.
3 SEE A3/PEL301 FOR MOUNTING HEIGHTS AND CIRCUIT INFORMATION.
4 1/2"C - (2)#10 + (1)#10 GND.
5 DAYLIGHT TRANSITION ZONE IN THIS AREA. LIGHTS IN DAYLIGHT TRANSITION ZONE ARE EXEMPT FROM DAYLIGHTING CONTROL.
6 SEE C1/PEL301 FOR MOUNTING HEIGHTS AND CIRCUIT INFORMATION.
7 SEE C3/PEL301 FOR MOUNTING HEIGHTS AND CIRCUIT INFORMATION.
8 LIGHTS ARE MOUNTED TO THE UNDERSIDE OF THE LEVEL 2 RAMP UP TO LEVEL 3. SEE A1/PEL302 FOR LOCATION.
9 SEE B1/PEL502 FOR FIXTURE MOUNTING DETAIL. TYPICAL FOR ALL FIXTURES.

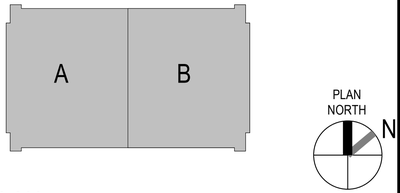

KEYPLAN

0 10' 20' 40' 60'

1/16" = 1'-0" GRAPHIC SCALE

NOTE:
IF THIS DRAWING IS LESS THAN 34" X 22"
IT IS A REDUCED SIZE DRAWING

STM	DESCRIPTION	DATE	APPR
1	MOD P00005	05/2023	
2	MOD P00006 AND MOD P00007	10/2025	
3	BY AMENDMENT	1/16/2026	

NAVFAC

NICHOLAS G. ZUBRICKI LICENSE No. 64239 STATE OF FLORIDA PROFESSIONAL ENGINEER 01/16/2026

BAMFORTH ENGINEERS + SURVEYORS

AE INFO

APPROVED
FOR COMMANDER NAVFAC 1/26/2026

ACTIVITY
Approved by J. Scott Roberts, Asset Management Branch Head & Supervisory Facility Planner, PWD Beaufort, SC via email.

SATISFACTORY TO DATE	12/15/2022
DES RLW DRW RLW CHK KLM	
PMDM	KTB / RLH
BRANCH MANAGER	JAS
CHIEF ENG/ARCH	EJA
FP ENGINEER	DSN

NAVAL FACILITIES ENGINEERING SYSTEMS COMMAND
NORFOLK, VA

DEPARTMENT OF THE NAVY
NAVAL FACILITIES ENGINEERING SYSTEMS COMMAND – MID-ATLANTIC
DC CORE

BEAUFORT, SC
MCAS BEAUFORT
P-475 AIRCRAFT MAINTENANCE HANGAR - VOLUME 4 (PARKING GARAGE OPTION)

PARKING GARAGE - LIGHTING PLAN - SECOND FLOOR

SCALE:	As indicated
EPROJECT NO.:	1363603
CONSTR. CONTR. NO.	
NAVFAC DRAWING NO.	12860395
SHEET	1174 OF 1412

PEL102

DRAWFORM REVISION: 25 AUGUST 2020

Autodesk Docs://20242 VMF-31 105 F35 Maintenance Hangar/20242 F35 Maintenance Hangar_Parking Facility-EL-R17D24.rvt
1/14/2026 3:59:42 PM

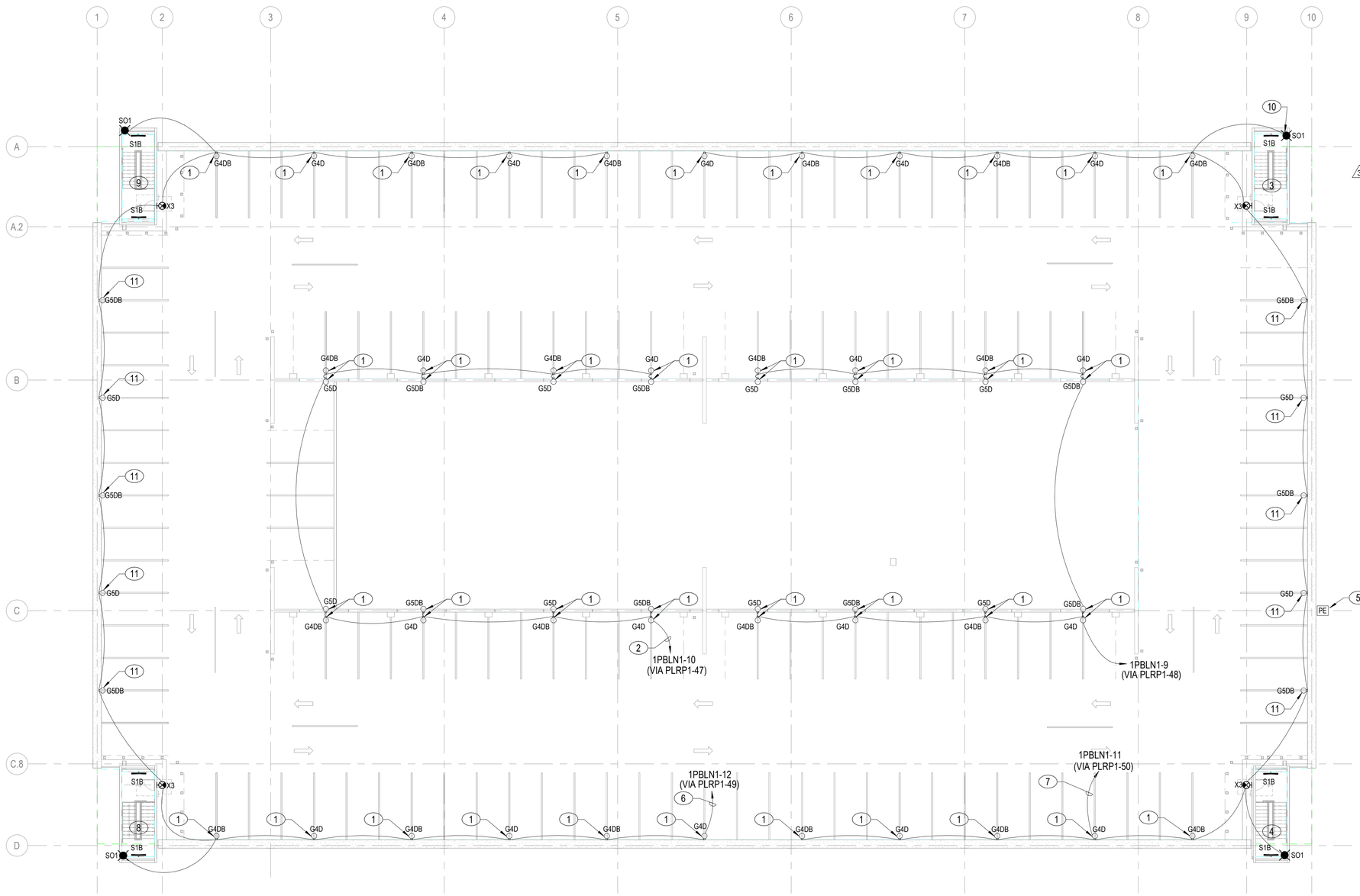

A1 LIGHTING PLAN, THIRD FLOOR, OVERALL

1/16" = 1'-0"

NOTES:

SHEET NOTES:

A. LIGHTING FIXTURES G3D, G3DB, G4D AND G4DB WILL BE CONTROLLED VIA LIGHTING RELAY PANEL "PLRP1" LOCATED IN ELECTRICAL ROOM P104. REFER TO SHEET PEL601 FOR RELAY PANEL SYSTEM WIRING DIAGRAM AND SCHEDULES.
B. PROVIDE AN UNSWITCHED PHASE CONDUCTOR TO ALL EMERGENCY BATTERY BACK-UP LIGHTING FIXTURES AND EXIT SIGNS.
C. REFER TO SHEET PEG001 FOR LIGHTING FIXTURE SYMBOLS LEGEND. REFER TO SHEET PEL701 FOR LIGHTING FIXTURE SCHEDULE.

KEY NOTES (00)

1 MOUNT FIXTURE TO THE BACK OF THE PHOTOVOLTAIC SUPPORT STRUCTURE. MOUNT AT 9'-0" ABOVE LEVEL 3 FINISHED FLOOR,
2 1/2"C - (2)#10 + (1)#10 GND.
3 SEE C3/PEL301 FOR MOUNTING HEIGHTS AND CIRCUIT INFORMATION.
4 SEE C1/PEL301 FOR MOUNTING HEIGHTS AND CIRCUIT INFORMATION.
5 BUILDING MOUNTED PHOTOCELL CONNECTED TO LIGHTING CONTROL PANEL "PLRP1" LOCATED IN ELECTRICAL ROOM P104. ORIENT NORTH. MOUNT PHOTOCELL ON EXTERIOR WALL AT 12" BELOW TOP OF WALL TO TOP OF DEVICE. SENSOR SHALL BE LISTED FOR EXTERIOR USE AND SUITABLE FOR CORROSIVE ENVIRONMENTS.
6 3/4"C - (2)#8 + (1)#8 GND.
7 1/2"C - (2)#10 + (1)#10 GND.
8 SEE A3/PEL301 FOR MOUNTING HEIGHTS AND CIRCUIT INFORMATION.
9 SEE A1/PEL301 FOR MOUNTING HEIGHTS AND CIRCUIT INFORMATION.
10 MOUNT TO A JUNCTION BOX THATS SECURELY ATTACHED TO THE METAL ROOF, TYPICAL.
11 MOUNT FIXTURE TO PRECAST CONCRETE BEAM. MOUNT AT 9'-0" ABOVE LEVEL 3 FINISHED FLOOR,

KEYPLAN

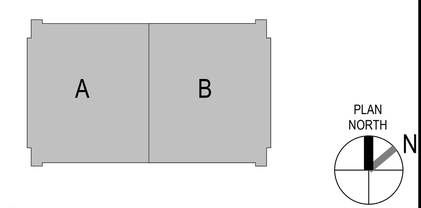

0 10' 20' 40' 60'
1/16" = 1'-0" GRAPHIC SCALE

NOTE:
IF THIS DRAWING IS LESS THAN 34" X 22"
IT IS A REDUCED SIZE DRAWING

STM	DESCRIPTION	DATE	APPR
1	MOD P00005	05/2023	
2	MOD P00006 AND MOD P00007	10/2025	
3	BY AMENDMENT	1/16/2026	

NAVFAC

NICHOLAS G. ZUBRZYCKI
LICENSE No. 64239
STATE OF FLORIDA
01/16/2026
PROFESSIONAL ENGINEER
SEAL

BAMFORTH ENGINEERS & CONSULTANTS
AE INFO

APPROVED
FOR COMMANDER NAVFAC 1/26/2026
ACTIVITY
Approved by J. Scott Roberts.
Asset Management Branch Head &
Supervisory Facility Planner, PWD
Beaufort, SC via email.
SATISFACTORY TO DATE 12/15/2022

DES RLW	DRW RLW	CHK KLM	
PM/DM	KTB / RLH		
BRANCH MANAGER	JAS		
CHIEF ENG/ARCH	EJA		
FP ENGINEER	DSN		

DEPARTMENT OF THE NAVY
NAVAL FACILITIES ENGINEERING SYSTEMS COMMAND
DC CODE:
NAVAL FACILITIES ENGINEERING SYSTEMS COMMAND ~ MID-ATLANTIC
NORFOLK, VA
MCAS BEAUFORT
BEAUFORT, SC
P-475 AIRCRAFT MAINTENANCE HANGAR - VOLUME 4 (PARKING GARAGE OPTION)
PARKING GARAGE - LIGHTING PLAN - THIRD FLOOR

SCALE: 1/16" = 1'-0"
EPROJECT NO.: 1363603
CONSTR. CONTR. NO.
NAVFAC DRAWING NO. 12860396
SHEET 1175 OF 1412

PEL103

DRAWFORM REVISION: 25 AUGUST 2020

Autodesk Docs://0042 \MFAT 502 P35 Maintenance Hangar/0042 P35 -maint Hangar_Parking Facility-EL-R\V\T0241.rvt
1/14/2026 3:55:32 PM

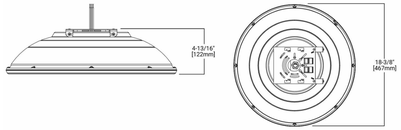

LUMINAIRE REQUIREMENTS:

1. HOUSING - DIE-CAST ALUMINUM WITH INTEGRAL, SELF-CLEANING HEAT SINK FINS, RIBS, OR EQUIVALENT PASSIVE COOLING MECHANISM. HEAT SINK SHALL BE INCORPORATED DIRECTLY INTO HOUSING TO ENSURE MAXIMUM HEAT TRANSFER AND DISSIPATION. ALL FASTENERS SHALL BE ALUMINUM OR STAINLESS STEEL. 3
2. FINISH - MULTI-STAGE PRE-TREATMENT, FINISHED IN SILVER BAKED-ON POLYESTER POWDER COAT. FINISH SHALL PASS 2500 HOUR SALT SPRAY TEST PER ASTM B117.
3. POWER SUPPLY/LED DRIVER - CLASS 1 DRIVER SHALL OPERATE AT 120/277V, 50/60 HZ; OTHER VOLTAGES OPTIONAL. POWER FACTOR GREATER THAN 0.9 AND THD LESS THAN 20% AT FULL LOAD. MINIMUM EFFICACY SHALL BE 70 LM/W AT MAXIMUM 600 mA OPERATING CURRENT.
4. LED OPTICAL ASSEMBLY - NUMBER OF LED ARRAYS SHALL VARY TO ACCOMMODATE DESIRED LUMINAIRE OUTPUT. PROVIDE WITH EQUIVALENT NEMA DISTRIBUTION TYPE AS INDICATED ON FIXTURE SCHEDULE. BUG UPLIGHT RATING OF U0, WITH BACKLIGHT AND GLARE RATINGS AS DETERMINED BY LIGHTING ZONE INSTALLED. MINIMUM COLOR RENDERING INDEX (CRI) SHALL BE 70 FOR CORRELATED COLOR TEMPERATURE (CCT) OF 4000-4500 DEGREES K. MAXIMUM BUG RATING OF B3-U0-G2.
5. SURGE PROTECTION - 6 kV MINIMUM, COMPLIANT WITH ANSI C62.41.2.
6. CERTIFICATION - UL AND/OR ETL LISTED, MINIMUM IP65 RATED PER ANSI/IEC 60529, AND RoHS COMPLIANT.
7. OTHER - THE ABOVE SKETCH IS A NON-PROPRIETY GRAPHIC REPRESENTATION OF A LUMINAIRE THAT MAY MEET THE SPECIFICATION REQUIREMENTS AND IS NOT INTENDED TO INDICATE A CERTAIN MANUFACTURER'S PREFERENCE. ALL DIMENSIONS ARE NOMINAL AND VARY PER MANUFACTURER.

LED PARKING GARAGE LUMINAIRE

C1 FIXTURE DETAIL FOR G1, G2, G3, G4, G5, G6

NOT TO SCALE

LUMINAIRE REQUIREMENTS:

1. HOUSING - DIE-CAST ALUMINUM WITH REINFORCEMENT RIBS FOR RIGIDITY. REFLECTORS, 4FT LENGTH. ALL FASTENERS SHALL BE ALUMINUM OR STAINLESS STEEL. 3
2. FINISH - MULTI-STAGE PHOSPHATE BONDING TREATMENT FINISHED WITH HIGH-REFLECTANCE, WHITE POLYESTER POWDER COAT, PAINTED AFTER FABRICATION.
3. LIGHT SOURCE - SOLID STATE LEDS WITH MINIMUM 60K HOURS RATED LIFE AT L90, 4000K CCT UON, MINIMUM 80 CRI, MAXIMUM 4-STEP MCADAM ELLIPSE BINNING TOLERANCE FOR COLOR CONSISTENCY, AND MINIMUM EFFICACY OF 100 LUMENS/WATT. EMERGENCY LUMEN OUTPUT AS INDICATED IN LUMINAIRE SCHEDULE. LUMINANCE OF LESS THAN 650 cd/ft2 BETWEEN 45 AND 90 DEGREES FROM NADIR.
4. DRIVER - REPLACEABLE, INTEGRAL, HIGH-EFFICIENCY DRIVER WITH MINIMUM 0.9 PF, OPERATING VOLTAGE OF 120-277V, THERMAL MANAGEMENT, < 20% TOTAL HARMONIC DISTORTION. ON-OFF CONTROL, STEP-DIMMABLE OR FULLY DIMMABLE AS INDICATED.
5. CERTIFICATION - UL 1598, DAMP LOCATION, DLC QUALIFIED, AND ROHS COMPLIANT. COMPLIES WITH LM79, LM80 AND TM21 TESTING STANDARDS. UL 924 WHEN EQUIPPED WITH EMERGENCY BATTERY BACK-UP.
6. MOUNTING - SURFACE ON CEILING OR SUSPENDED.
7. THIS SKETCH IS A NON-PROPRIETARY GRAPHIC REPRESENTATION OF A LUMINAIRE THAT MAY MEET THE SPECIFICATION REQUIREMENTS. IT IS NOT INTENDED TO INDICATE A CERTAIN MANUFACTURER OR PREFERENCE.

LED INDUSTRIAL STRIP

C2 FIXTURE DETAIL FOR H1, H1B, H2B

NOT TO SCALE

LUMINAIRE REQUIREMENTS:

1. HOUSING - DIE-CAST ALUMINUM, WITH REINFORCEMENT RIBS FOR RIGIDITY; END CAPS SAME MATERIAL AS HOUSING, SECURED WITH TABS, SCREWS, OR RIVETS. WHITE ENAMEL FINISH APPLIED AFTER FABRICATION. 4FT LENGTH. ALL FASTENERS SHALL BE ALUMINUM OR STAINLESS STEEL. 3
2. LENS - ACRYLIC PRISMATIC OR WHITE OPAL TO PROVIDE EVEN ILLUMINATION AND TO ELIMINATE PIXILATION FROM LED LIGHT SOURCE.
3. LIGHT SOURCE - SOLID STATE LEDS WITH MINIMUM 60K HOURS RATED LIFE AT L70, 4000K CCT, MINIMUM 80 CRI, MAXIMUM 4-STEP MCADAM ELLIPSE BINNING TOLERANCE FOR COLOR CONSISTENCY, AND MINIMUM EFFICACY OF 90 LUMENS/WATT. INITIAL LUMEN OUTPUT AS INDICATED IN LUMINAIRE SCHEDULE.
4. DRIVER - REPLACEABLE, INTEGRAL, HIGH-EFFICIENCY DRIVER WITH MINIMUM 0.9 PF, OPERATING VOLTAGE OF 120-277V, THERMAL MANAGEMENT, < 20% TOTAL HARMONIC DISTORTION. ON-OFF CONTROL, STEP-DIMMABLE OR FULLY DIMMABLE AS INDICATED.
5. CERTIFICATION - UL 1598, DAMP LOCATION, DLC QUALIFIED, AND ROHS COMPLIANT. COMPLIES WITH LM79, LM80 AND TM21 TESTING STANDARDS. UL 924 WHEN EQUIPPED WITH EMERGENCY BATTERY BACK-UP.
6. MOUNTING - SURFACE.
7. THIS SKETCH IS A NON-PROPRIETARY GRAPHIC REPRESENTATION OF A LUMINAIRE THAT MAY MEET THE SPECIFICATION REQUIREMENTS. IT IS NOT INTENDED TO INDICATE A CERTAIN MANUFACTURER OR PREFERENCE.

WALL MOUNTED LED

C3 FIXTURE DETAIL FOR S1B

NOT TO SCALE

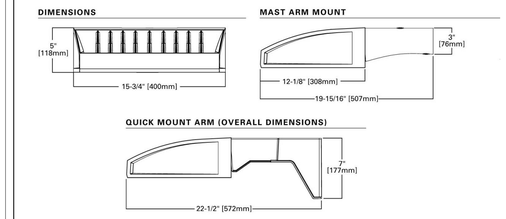

LUMINAIRE REQUIREMENTS:

1. HOUSING - DIE-CAST ALUMINUM WITH INTEGRAL PASSIVE COOLING MECHANISM. HEAT SINK SHALL BE INCORPORATED DIRECTLY INTO HOUSING OR DRIVER COMPARTMENT TO ENSURE MAXIMUM HEAT TRANSFER AND DISSIPATION. ALL FASTENERS SHALL BE ALUMINUM OR STAINLESS STEEL. 3
2. FINISH - MULTI-STAGE PRE-TREATMENT, FINISHED WITH BAKED-ON POLYESTER POWDER COAT. FINISH SHALL PASS 2500 HOUR SALT SPRAY TEST PER ASTM B117. DARK BRONZE FINISH.
3. POWER SUPPLY/LED DRIVER - CLASS 1 DRIVER SHALL OPERATE AT 120/277 VOLTS, 50/60 HZ; POWER FACTOR GREATER THAN 0.9 AND THD LESS THAN 20% AT FULL LOAD. MINIMUM EFFICACY SHALL BE 60 LM/W AT MAXIMUM 600mA OPERATING CURRENT. MAXIMUM BUG RATING OF B1-U0-G2.
4. LED OPTICAL ASSEMBLY - PRECISION MOLDED ACRYLIC LENS PROVIDED FOR MULTIPLE HIGH-POWERED LEDS PRODUCING NEMA DISTRIBUTION TYPE AS NOTED ON FIXTURE SCHEDULE. BUG UPLIGHT RATING OF U0, WITH GLARE RATING AS DETERMINED BY LIGHTING ZONE INSTALLED.
5. CERTIFICATION - UL AND/OR ETL LISTED FOR WET LOCATIONS, AND RoHS COMPLIANT.
6. OTHER - THE ABOVE SKETCH IS A NON-PROPRIETY GRAPHIC REPRESENTATION OF A LUMINAIRE THAT MAY MEET THE SPECIFICATION REQUIREMENTS AND IS NOT INTENDED TO INDICATE A CERTAIN MANUFACTURER'S PREFERENCE. ALL DIMENSIONS ARE NOMINAL AND VARY PER MANUFACTURER.

LED WALL PACK

C4 FIXTURE TYPES W2DB

NOT TO SCALE

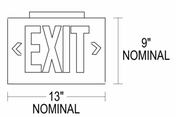

LUMINAIRE REQUIREMENTS:

1. HOUSING - HIGH-IMPACT, UV-STABILIZED, INJECTION-MOLDED THERMOPLASTIC. SINGLE OR DOUBLE-FACED AS INDICATED. ALL FASTENERS SHALL BE ALUMINUM OR STAINLESS STEEL. 3
2. LETTERS/CHEVRONS - MINIMUM 6" HIGH WITH 3/4" STROKE. GREEN LETTERS AS INDICATED. PROVIDE CHEVRONS AS INDICATED EITHER LEFT, RIGHT OR BOTH DIRECTIONS AS INDICATED. CHEVRONS PUNCHED OUT THROUGH HOUSING AS REQUIRED.
3. EMERGENCY PACK - SOLID-STATE, CONSTANT-CURRENT TYPE BATTERY CHARGER WITH MAINTENANCE-FREE, NICKEL-CADMIUM BATTERY, AC-ON INDICATOR LAMP AND TEST SWITCH.
4. MOUNTING - UNIVERSAL MOUNTING KIT FOR CEILING, WALL OR END-OF-FIXTURE MOUNTING.
5. ILLUMINATION - PROVIDED GREEN HIGH-OUTPUT LEDS INSIDE OF FIXTURE HOUSING. PROVIDE POLYSTYRENE DIFFUSER IN COLOR INDICATED WITH FREQUENCY-MATCHED SILKSCREEN COATING FOR MAXIMUM LED LIGHT OUTPUT.
6. CERTIFICATION - UL LISTED AND CERTIFIED FOR DAMP LOCATIONS.

LED EXIT SIGN

A1 FIXTURE DETAIL FOR X1, X2

NOT TO SCALE

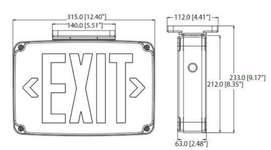

LUMINAIRE REQUIREMENTS:

1. HOUSING - HIGH-IMPACT, UV-STABILIZED, POLYCARBONATE, HIGH-IMPACT POLYCARBONATE LENS, SINGLE OR DOUBLE-FACED AS INDICATED. ALL FASTENERS SHALL BE ALUMINUM OR STAINLESS STEEL. 3
2. LETTERS/CHEVRONS - MINIMUM 6" HIGH WITH 3/4" STROKE. GREEN LETTERS AS INDICATED. PROVIDE CHEVRONS AS INDICATED EITHER LEFT, RIGHT OR BOTH DIRECTIONS AS INDICATED. CHEVRONS PUNCHED OUT THROUGH HOUSING AS REQUIRED.
3. EMERGENCY PACK - SOLID-STATE, CONSTANT-CURRENT TYPE BATTERY CHARGER WITH MAINTENANCE-FREE, NICKEL-CADMIUM BATTERY, AC-ON INDICATOR LAMP AND TEST SWITCH.
4. MOUNTING - UNIVERSAL MOUNTING KIT FOR CEILING, WALL OR END-OF-FIXTURE MOUNTING.
5. ILLUMINATION - PROVIDED GREEN HIGH-OUTPUT LEDS INSIDE OF FIXTURE HOUSING. PROVIDE POLYSTYRENE DIFFUSER IN COLOR INDICATED WITH FREQUENCY-MATCHED SILKSCREEN COATING FOR MAXIMUM LED LIGHT OUTPUT.
6. CERTIFICATION - UL LISTED AND CERTIFIED FOR WET LOCATIONS.

WET LISTED LED EXIT SIGN

A2 FIXTURE DETAIL FOR X3

NOT TO SCALE

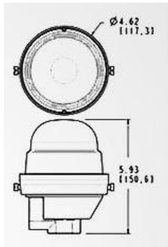

LUMINAIRE REQUIREMENTS:

1. HOUSING - WEATHER RESISTANT STAINLESS STEEL, IP66/NEMA 4X RATED. ALL FASTENERS SHALL BE ALUMINUM OR STAINLESS STEEL. 3
2. LED DRIVER - DRIVER SHALL OPERATE AT 120 VOLTS, 50/60 HZ; POWER FACTOR GREATER THAN 0.9 AND THD LESS THAN 20% AT FULL LOAD.
3. OPTICAL ASSEMBLY - UV STABILIZED RED POLYCARBONATE LENS, RED LED.
4. CERTIFICATION - UL AND/OR ETL LISTED FOR WET LOCATIONS, MEET OR EXCEED FAA STANDARDS.
5. OTHER - THE ABOVE SKETCH IS A NON-PROPRIETY GRAPHIC REPRESENTATION OF A LUMINAIRE THAT MAY MEET THE SPECIFICATION REQUIREMENTS AND IS NOT INTENDED TO INDICATE A CERTAIN MANUFACTURER'S PREFERENCE. ALL DIMENSIONS ARE NOMINAL AND VARY PER MANUFACTURER.

SITE OBSTRUCTION LUMINAIRE

A3 FIXTURE DETAIL FOR S01

NOT TO SCALE

NOTE:
IF THIS DRAWING IS LESS THAN 34" X 22"
IT IS A REDUCED SIZE DRAWING

STM	DESCRIPTION	DATE	APPR
1	MOD P00005	05/2023	
2	MOD P00006 AND MOD P00007	10/2025	
3	BY AMENDMENT	1/16/2026	

NAVFAC

NICHOLAS G. ZUBAJKOV, LICENSE No. 64239, STATE OF FLORIDA, PROFESSIONAL ENGINEER, 01/16/2026

BAMFORTH ENGINEERS - ARCHITECTS

AE INFO

APPROVED

FOR COMMANDER NAVFAC 1/26/2026

ACTIVITY: Approved by J. Scott Roberts, Asset Management Branch Head & Supervisory Facility Planner, PWD Beaufort, SC via email.

SATISFACTORY TO DATE	12/15/2022
DES RLW / DRW RLW / CHK KLM	
PMDM	KTB / RLH
BRANCH MANAGER	JAS
CHIEF ENG/ARCH	EJA
FP ENGINEER	DSN

DEPARTMENT OF THE NAVY
NAVAL FACILITIES ENGINEERING SYSTEMS COMMAND
NAVAL FACILITIES ENGINEERING SYSTEMS COMMAND ~ MID-ATLANTIC
NORFOLK, VA

DC CORE:
MCAS BEAUFORT

BEAUFORT, SC

P-475 AIRCRAFT MAINTENANCE HANGAR - VOLUME 4 (PARKING GARAGE OPTION)

LIGHTING FIXTURE DETAILS

SCALE: 12" = 1'-0"

EPROJECT NO.: 13363603

CONSTR. CONTR. NO.

NAVFAC DRAWING NO. 12860399

SHEET 1178 OF 1412

PEL501

DRAWFORM REVISION: 25 AUGUST 2020

Autodesk Docs://2042 MFA1 520 F35 Maintenance Hangar/2042 F35 maint Hangar_Parking Facility-EL-R17D24.rvt
1/14/2026 4:00:00 PM

LIGHTING FIXTURES SCHEDULE

FIXTURE TYPE	FIXTURE DESCRIPTION	VOLTAGE	LAMP	LUMEN	CCT	CRI	MOUNTING	NOTES	LOAD	DETAIL REFERENCE
G1D	18" DIAMETER X 4-13/16" DEEP PENDANT PARKING GARAGE FIXTURE WITH DIE-CAST ALUMINUM HOUSING, WIDE OPTICAL DISTRIBUTION, 2.5MIL BRONZE POWDER COAT FINISH, STANDARD 0-10V DIMMING, AND IP66 RATING.	120V	LED	3875	4000K	70	SUSPENDED	SEE PEL302 AND PEL502 FOR MOUNTING HEIGHTS AND DETAILS.	28 VA	C1/PEL501
G1DB	18" DIAMETER X 4-13/16" DEEP PENDANT PARKING GARAGE FIXTURE WITH DIE-CAST ALUMINUM HOUSING, WIDE OPTICAL DISTRIBUTION, 2.5MIL BRONZE POWDER COAT FINISH, STANDARD 0-10V DIMMING, AND IP66 RATING. PROVIDE WITH EMERGENCY BATTERY.	120V	LED	3875	4000K	70	SUSPENDED	SEE PEL302 AND PEL502 FOR MOUNTING HEIGHTS AND DETAILS.. PROVIDE INTEGRAL BATTERY WITH 90 MINUTE RUN TIME.	28 VA	C1/PEL501
G2D	18" DIAMETER X 4-13/16" DEEP PENDANT PARKING GARAGE FIXTURE WITH DIE-CAST ALUMINUM HOUSING, WIDE OPTICAL DISTRIBUTION, 2.5MIL BRONZE POWDER COAT FINISH, STANDARD 0-10V DIMMING, AND IP66 RATING.	120V	LED	12500	4000K	70	SUSPENDED	SEE PEL302 AND PEL502 FOR MOUNTING HEIGHTS AND DETAILS.	105 VA	C1/PEL501
G2DB	18" DIAMETER X 4-13/16" DEEP PENDANT PARKING GARAGE FIXTURE WITH DIE-CAST ALUMINUM HOUSING, WIDE OPTICAL DISTRIBUTION, 2.5MIL BRONZE POWDER COAT FINISH, STANDARD 0-10V DIMMING, AND IP66 RATING. PROVIDE WITH EMERGENCY BATTERY.	120V	LED	12500	4000K	70	SUSPENDED	SEE PEL302 AND PEL502 FOR MOUNTING HEIGHTS AND DETAILS. PROVIDE INTEGRAL BATTERY WITH 90 MINUTE RUN TIME.	105 VA	C1/PEL501
G3D	18" DIAMETER X 4-13/16" DEEP PENDANT PARKING GARAGE FIXTURE WITH DIE-CAST ALUMINUM HOUSING, WIDE OPTICAL DISTRIBUTION, 2.5MIL BRONZE POWDER COAT FINISH, STANDARD 0-10V DIMMING, AND IP66 RATING.	120V	LED	9500	4000K	70	SUSPENDED	SEE PEL302 AND PEL502 FOR MOUNTING HEIGHTS AND DETAILS.	75 VA	C1/PEL501
G3DB	18" DIAMETER X 4-13/16" DEEP PENDANT PARKING GARAGE FIXTURE WITH DIE-CAST ALUMINUM HOUSING, WIDE OPTICAL DISTRIBUTION, 2.5MIL BRONZE POWDER COAT FINISH, STANDARD 0-10V DIMMING, AND IP66 RATING. PROVIDE WITH EMERGENCY BATTERY.	120V	LED	9500	4000K	70	SUSPENDED	SEE PEL302 AND PEL502 FOR MOUNTING HEIGHTS AND DETAILS. PROVIDE INTEGRAL BATTERY WITH 90 MINUTE RUN TIME.	75 VA	C1/PEL501
G4D	18" DIAMETER X 4-13/16" DEEP PENDANT PARKING GARAGE FIXTURE WITH DIE-CAST ALUMINUM HOUSING, DRIVE LANE ASYMMETRIC OPTICAL DISTRIBUTION, 2.5MIL SILVER POWDER COAT FINISH, AND IP66 RATING. PROVIDE WITH INTEGRAL DIMMING OCCUPANCY SENSOR. INTEGRAL CONTROLS SHALL BE PROGRAMMED SUCH THAT LIGHT OUTPUT IS AT 50% FULL BRIGHTNESS FROM DUSK TO DAWN, UNLESS MOTION IS DETEDCTED, WHICH SHALL TRIGGER THE FIXTURE TO SWITCH TO 100% FULL BRIGHTNESS WITH A 10 MINUTE VACANCY TIMEOUT.	120V	LED	3300	4000K	70	WALL	SEE PEL302 AND PEL502 FOR MOUNTING HEIGHTS AND DETAILS. AIM ASYMMETRIC DISTRIBUTION TOWARDS CENTER OF DRIVE LANE.	29 VA	C1/PEL501
G4DB	18" DIAMETER X 4-13/16" DEEP PENDANT PARKING GARAGE FIXTURE WITH DIE-CAST ALUMINUM HOUSING, DRIVE LANE ASYMMETRIC OPTICAL DISTRIBUTION, 2.5MIL SILVER POWDER COAT FINISH, AND IP66 RATING. PROVIDE WITH INTEGRAL DIMMING OCCUPANCY SENSOR AND EMERGENCY BATTERY. INTEGRAL CONTROLS SHALL BE PROGRAMMED SUCH THAT LIGHT OUTPUT IS AT 50% FULL BRIGHTNESS FROM DUSK TO DAWN, UNLESS MOTION IS DETEDCTED, WHICH SHALL TRIGGER THE FIXTURE TO SWITCH TO 100% FULL BRIGHTNESS WITH A 10 MINUTE VACANCY TIMEOUT.	120V	LED	3300	4000K	70	WALL	SEE PEL302 AND PEL502 FOR MOUNTING HEIGHTS AND DETAILS. PROVIDE INTEGRAL BATTERY WITH 90 MINUTE RUN TIME. AIM ASYMMETRIC DISTRIBUTION TOWARDS CENTER OF DRIVE LANE.	29 VA	C1/PEL501
G5D	18" DIAMETER X 4-13/16" DEEP PENDANT PARKING GARAGE FIXTURE WITH DIE-CAST ALUMINUM HOUSING, DRIVE LANE ASYMMETRIC OPTICAL DISTRIBUTION, 2.5MIL SILVER POWDER COAT FINISH, AND IP66 RATING. PROVIDE WITH INTEGRAL DIMMING OCCUPANCY SENSOR. INTEGRAL CONTROLS SHALL BE PROGRAMMED SUCH THAT LIGHT OUTPUT IS AT 50% FULL BRIGHTNESS FROM DUSK TO DAWN, UNLESS MOTION IS DETEDCTED, WHICH SHALL TRIGGER THE FIXTURE TO SWITCH TO 100% FULL BRIGHTNESS WITH A 10 MINUTE VACANCY TIMEOUT.	120V	LED	4475	4000K	70	WALL	SEE PEL302 AND PEL502 FOR MOUNTING HEIGHTS AND DETAILS. AIM ASYMMETRIC DISTRIBUTION TOWARDS CENTER OF DRIVE LANE.	41 VA	C1/PEL501
G5DB	18" DIAMETER X 4-13/16" DEEP PENDANT PARKING GARAGE FIXTURE WITH DIE-CAST ALUMINUM HOUSING, DRIVE LANE ASYMMETRIC OPTICAL DISTRIBUTION, 2.5MIL SILVER POWDER COAT FINISH, AND IP66 RATING. PROVIDE WITH INTEGRAL DIMMING OCCUPANCY SENSOR AND EMERGENCY BATTERY. INTEGRAL CONTROLS SHALL BE PROGRAMMED SUCH THAT LIGHT OUTPUT IS AT 50% FULL BRIGHTNESS FROM DUSK TO DAWN, UNLESS MOTION IS DETEDCTED, WHICH SHALL TRIGGER THE FIXTURE TO SWITCH TO 100% FULL BRIGHTNESS WITH A 10 MINUTE VACANCY TIMEOUT.	120V	LED	4475	4000K	70	WALL	SEE PEL302 AND PEL502 FOR MOUNTING HEIGHTS AND DETAILS. PROVIDE INTEGRAL BATTERY WITH 90 MINUTE RUN TIME. AIM ASYMMETRIC DISTRIBUTION TOWARDS CENTER OF DRIVE LANE.	41 VA	C1/PEL501
H1	4' LENSED LED STRIP FIXTURE, 22-GAUGE DIE-FORMED ALUMINUM WITH WHITE POLYESTER POWDER COAT FINISH, 0.125" THICK FROSTED ACRYLIC LENS.	120V	LED	3138	4000K	80	SUSPENDED	SUSPEND AT 9'-0" AFF TO BOTTOM UON. FIXTURE SHALL BE UL LISTED AS A RACEWAY SUITABLE FOR THROUGH WIRING.	22 VA	C2/PEL501
H1B	4' LENSED LED STRIP FIXTURE, 22-GAUGE DIE-FORMED ALUMINUM WITH WHITE POLYESTER POWDER COAT FINISH, 0.125" THICK FROSTED ACRYLIC LENS. PROVIDE WITH EMERGENCY BATTERY.	120V	LED	3138	4000K	80	SUSPENDED	SUSPEND AT 9'-0" AFF TO BOTTOM UON. FIXTURE SHALL BE UL LISTED AS A RACEWAY SUITABLE FOR THROUGH WIRING. PROVIDE INTEGRAL BATTERY WITH 90 MINUTE RUN TIME.	22 VA	C2/PEL501
H2B	4' LENSED LED STRIP FIXTURE, 22-GAUGE DIE-FORMED ALUMINUM WITH WHITE POLYESTER POWDER COAT FINISH, 0.125" THICK FROSTED ACRYLIC LENS. PROVIDE WITH EMERGENCY BATTERY.	120V	LED	5858	4000K	80	SUSPENDED	SUSPEND AT 9'-0" AFF TO BOTTOM UON. FIXTURE SHALL BE UL LISTED AS A RACEWAY SUITABLE FOR THROUGH WIRING. PROVIDE INTEGRAL BATTERY WITH 90 MINUTE RUN TIME.	22 VA	C2/PEL501
S1B	4'L LED WALL DIRECT/INDIRECT FIXTURE WITH ALUMINUM ENCLOSURE, WHITE FINISH, AND INTEGRAL OCCUPANCY SENSOR TO DIM TO 50% WHEN VACANT. PROVIDE EMERGENCY BATTERY.	120V	LED	6000	4000K	80	SURFACE	SEE PEL301 FOR MOUNTING HEIGHTS. PROVIDE INTEGRAL BATTERY WITH 90 MINUTE RUN TIME AT 25% BRIGHTNESS MINIMUM. UL LISTED FOR DAMP LOCATIONS.	42 VA	C3/PEL501
SO1	4.6" DIAMETER ROUND RED LED OBSTRUCTION LUMINAIRE WITH UV STABILIZED POLYCARBONATE LENS, SHOCK AND VIBRATION RESISTANT, STEADY OPERATION, WEATHER AND CORROSION RESISTANT LAMP ASSEMBLY AND HOUSING, AND SELF-CONTAINED WIRING COMPARTMENT.	120V	LED				SURFACE, ON METAL ROOF	OBSTRUCTION LIGHT SHALL MEET FAA REQUIREMENTS AND BE IP66/NEMA 4X RATED. PROVIDE WITH PHOTOCELL AND BACKUP BATTERY FOR 12-HOUR OPERATION.	3 VA	A3/PEL501
W2DB	EXTERIOR WALL MOUNTED FIXTURE WITH DIE CAST ALUMINUM ENCLOSURE, IP66 RATED HOUSING, 2.5MIL THICKNESS DARK BRONZE POWDER COAT FINISH, AND TYPE IV WIDE DISTRIBUTION. PROVIDE WITH INTEGRAL DIMMING OCCUPANCY SENSOR AND EMERGENCY BATTERY. INTEGRAL CONTROLS SHALL BE PROGRAMMED SUCH THAT LIGHT OUTPUT IS AT 50% FULL BRIGHTNESS FROM DUSK TO DAWN, UNLESS MOTION IS DETEDCTED, WHICH SHALL TRIGGER THE FIXTURE TO SWITCH TO 100% FULL BRIGHTNESS WITH A 10 MINUTE VACANCY TIMEOUT.	120V	LED	6458	4000K	80	WALL	MOUNTED AT 15'-0" AFG TO BOTTOM UON.	59 VA	C4/PEL501
X1	SINGLE FACE LED EXIT SIGN WITH THERMOPLASTIC HOUSING, INTEGRAL NICKEL CADMIUM BATTERY, GREEN LETTERS, AND SELF-DIAGNOSTICS.	120V	LED	N/A	N/A	N/A	UNIVERSAL	WHERE WALL-MOUNTED ABOVE DOOR, MOUNT AT 1" ABOVE DOOR FRAME TO BOTTOM OF SIGN. UL LISTED FOR DAMP LOCATIONS.	2 VA	A1/PEL501
X2	DOUBLE FACE LED EXIT SIGN WITH THERMOPLASTIC HOUSING, INTEGRAL NICKEL CADMIUM BATTERY, GREEN LETTERS, AND SELF-DIAGNOSTICS.	120V	LED	N/A	N/A	N/A	UNIVERSAL	WHERE WALL-MOUNTED ABOVE DOOR, MOUNT AT 1" ABOVE DOOR FRAME TO BOTTOM OF SIGN. UL LISTED FOR DAMP LOCATIONS.	2 VA	A1/PEL501
X3	SINGLE FACE LED EXIT SIGN WITH UV STABILIZED POLYCARBONATE LENS AND HOUSING, INTEGRAL NICKEL CADMIUM BATTERY, GREEN LETTERS, AND SELF-DIAGNOSTICS.	120V	LED	N/A	N/A	N/A	UNIVERSAL	WHERE WALL-MOUNTED ABOVE DOOR, MOUNT AT 1" ABOVE DOOR FRAME TO BOTTOM OF SIGN. UL LISTED FOR WET LOCATIONS.	2 VA	A2/PEL501

NOTES:

SHEET NOTES:

A. LIGHTING FIXTURES SHALL NOT BE USED AS A RACEWAY UNLESS UL LISTED AS SUCH.
B. DIMMING DRIVERS SHALL BE COMPATIBLE WITH ASSOCIATED LIGHTING CONTROL SWITCH OR RELAY AND SHALL ALLOW FOR 10% TO 100% DIMMING RANGE OR STEP DIMMING AS REQUIRED.

NOTE:
IF THIS DRAWING IS LESS THAN 34" X 22"
IT IS A REDUCED SIZE DRAWING

STM	DESCRIPTION	DATE	APPR
1	MOD P00005	05/2023	
2	MOD P00006 AND MOD P00007	10/2025	
3	BY AMENDMENT	1/16/2026	

NAVFAC

NICHOLAS G. ZUBRZYCKI
LICENSE
No. 64239
STATE OF FLORIDA
01/16/2026
PROFESSIONAL ENGINEER

BAMFORTH ENGINEERS & ARCHITECTS

APPROVED
FOR COMMANDER NAVFAC 1/26/2026
ACTIVITY
Approved by J. Scott Roberts,
Asset Management Branch Head &
Supervisory Facility Planner, PWD
Beaufort, SC via email.

SATISFACTORY TO DATE 12/15/2022
DES RLW DRW RLW CHK KLM
PMDM KTB / RLH
BRANCH MANAGER JAS
CHIEF ENG/ARCH EJA
FP ENGINEER DSN

DEPARTMENT OF THE NAVY
NAVAL FACILITIES ENGINEERING SYSTEMS COMMAND ~ MID-ATLANTIC
NORFOLK, VA
DC CORE:
MCAS BEAUFORT
BEAUFORT, SC
P-475 AIRCRAFT MAINTENANCE HANGAR - VOLUME 4 (PARKING GARAGE OPTION)
LIGHTING FIXTURE SCHEDULE

SCALE:
EPROJECT NO.: 1363603
CONSTR. CONTR. NO.
NAVFAC DRAWING NO. 12860402
SHEET 1181 OF 1412
PEL701

DRAWFORM REVISION: 25 AUGUST 2020

Autodesk Docs://2042 MF A1 120 F3 Maintenance Hangar/2042 F3 Maintenance Hangar_Parking Facility-EL-R17.2024.rvt
1/14/2026 4:00:08 PM

PROVIDE PV PANELS, ASSOCIATED COMPONENTS AND GENERAL PURPOSE RECEPTACLES ONLY IF THE PARKING GARAGE PV PANEL OPTION IS AWARDED.

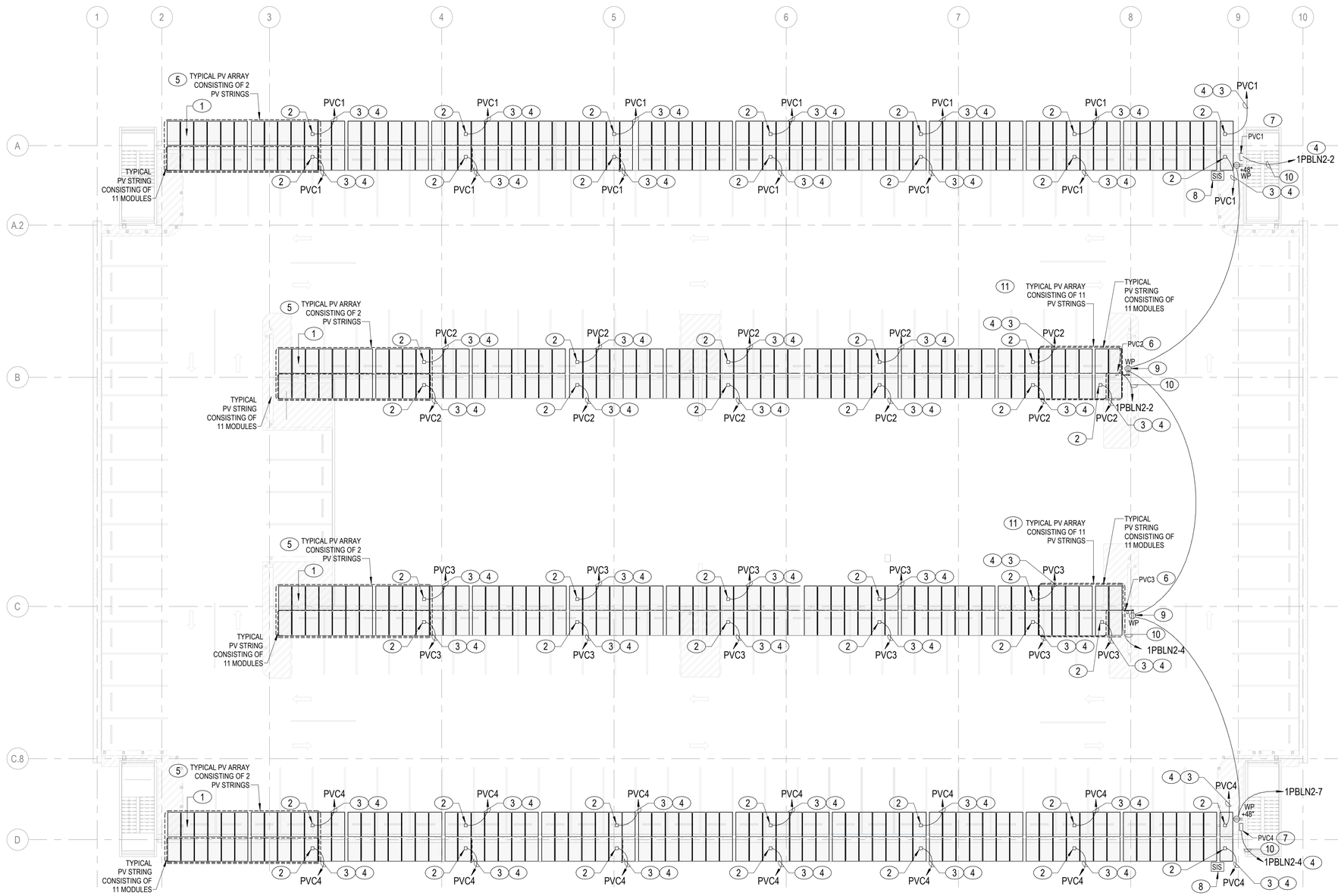

A1 POWER PLAN, THIRD FLOOR

1/16" = 1'-0"

NOTES:

SHEET NOTES:

A. INSTALL WIRING IN MINIMUM 1/2" CONDUIT BETWEEN EACH ARRAY AND COMBINER BOX. ADJUST THE CONDUIT SIZE AS REQUIRED FOR PROPER WIRE FILL. PROVIDE CONDUCTORS WITH INSULATION TYPE AS RECOMMENDED BY THE PV SYSTEM MANUFACTURER. CONDUCTORS WILL BE UL LISTED FOR WET LOCATION. CONDUCTOR SIZE SHALL BE AS FOLLOWS:
   a. DISTANCES 0 - 320 FEET: #10 AWG COPPER.
   b. DISTANCES 320 - 490 FEET: #8 AWG COPPER.

3 B. PAINT ALL CONDUIT AND JUNCTION BOXES ON THE CANOPY STRUCTURE PER SPECIFICATIONS FOR COORSION PREVENTION.

C. CLAMPS USED TO ATTACH ELECTRICAL EQUIPMENT SUCH AS PULL BOXES, CONDUIT AND PV PANELS SHALL NOT PENETRATE OR MAKE ANY PERFORATIONS ON THE CANOPY STRUCTURE.

3 D. ALL COMPONENTS OF THE PHOTOVOLTAIC SYSTEM SHALL BE LISTED, RATED, AND SUITABLE FOR INSTALLATION IN CORROSIVE ENVIRONMENTS. MATERIALS AND FINISHES SHALL BE SELECTED TO RESIST DETERIORATION DUE TO SALT AIR, MOISTURE, AND OTHER ENVIRONMENTAL EXPOSURE. PROVIDE STAINLESS STEEL FASTENERS, HARDWARE, AND ATTACHMENT DEVICES, AND CORROSION-RESISTANT MOUNTING STRUCTURES AND RACEWAYS AS REQUIRED. COMPLY WITH ALL APPLICABLE MANUFACTURER RECOMMENDATIONS AND PROJECT SPECIFICATIONS FOR CORROSION PROTECTION.

KEY NOTES (00)

1 TYPICAL PV MODULE MOUNTED ON CANOPY STRUCTURE. 11 MODULES WILL BE CONNECTED TOGETHER IN SERIES TO FORM A PV STRING WITH SINGLE OUTPUT CIRCUIT. PV MODULE WILL BE MOUNTED WITH A MINIMUM OF 2" SPACE BETWEEN EACH MODULE AND 6" FROM THE EDGE OF THE CANOPY STRUCTURE. SEE STRUCTURAL DRAWINGS FOR PV MODULE SUPPORT BRACKET DETAIL.

2 WEATHER PROOF JUNCTION BOX MOUNTED TO THE UNDERSIDE OF THE CANOPY STRUCTURE FOR PV STRING OUTPUT CIRCUIT. SIZE BOX AS REQUIRED.

3 GALVANIZED RIGID STEEL CONDUIT FOR PV STRING OUTPUT CIRCUIT. SURFACE MOUNT WITH LISTED FASTENERS TO THE UNDERSIDE OF THE CANOPY STRUCTURE.

4 ROUTE CONDUIT ALONG THE UNDERSIDE OF THE CANOPY STRUCTURE TO THE DC COMBINER BOX INDICATED.

5 SEE B1/PEP502 FOR TYPICAL 2-STRING WIRING DIAGRAM. SEE A1/PEP502 FOR PV SYSTEM INTERCONNECTION DIAGRAM.

6 TYPICAL NEMA 4X DC COMBINER BOX MOUNTED TO EQUIPMENT RACK ALONG SIDE CANOPY STRUCTURE. SEE A1/PEP501 FOR EQUIPMENT RACK DETAIL.

7 TYPICAL NEMA 4X DC COMBINER BOX MOUNTED ON STAIRWAY EXTERIOR WALL AT 72" AFF TO TOP.

8 SOLAR IRRADIANCE SENSOR MOUNTED TO CANOPY STRUCTURE. CONNECT SENSOR TO INVERTER. ORIENT SENSOR AS RECOMMENDED BY MANUFACTURER. SENSOR SHALL BE LISTED FOR EXTERIOR USE AND SUITBLE FOR CORROSIVE ENVIRONMENTS.

9 MOUNT RECEPTACLE TO DC COMBINER EQUIPMENT RACK. SEE A1/PEP501 FOR EQUIPMENT RACK DETAIL.

10 BRANCH CIRCUIT FOR DC COMBINER BOX ELECTRONICS POWER AS REQUIRED.

11 SEE C1/PEP502 FOR TYPICAL 1-STRING WIRING DIAGRAM. SEE A1/PEP502 FOR PV SYSTEM INTERCONNECTION DIAGRAM.

PLAN NORTH

0 10' 20' 40' 60'

1/16" = 1'-0" GRAPHIC SCALE

NOTE:
IF THIS DRAWING IS LESS THAN 34" X 22"
IT IS A REDUCED SIZE DRAWING

STM	DESCRIPTION	DATE	APPR
1	MOD P00005	05/2023	
2	MOD P00006 AND MOD P00007	10/2025	
3	BY AMENDMENT	1/16/2026	

NAVFAC

NICHOLAS G. ZUBRICKI LICENSE No. 64239 STATE OF FLORIDA PROFESSIONAL ENGINEER 01/16/2026

BAMFORTH ENGINEERS ARCHITECTS

APPROVED
FOR COMMANDER NAVFAC 1/26/2026

ACTIVITY: Approved by J. Scott Roberts, Asset Management Branch Head & Supervisory Facility Planner, PWD Beaufort, SC via email.

SATISFACTORY TO DATE 12/15/2022

DES	RLW	DRW RLW	CHK KLM
PM/DM			KTB / RLH
BRANCH MANAGER			JAS
CHIEF ENG/ARCH			EJA
FP ENGINEER			DSN

NAVAL FACILITIES ENGINEERING SYSTEMS COMMAND
NAVAL FACILITIES ENGINEERING SYSTEMS COMMAND ~ MID-ATLANTIC NORFOLK, VA
DEPARTMENT OF THE NAVY
DD CODE:
MCAS BEAUFORT
BEAUFORT, SC
P-475 AIRCRAFT MAINTENANCE HANGAR - VOLUME 4 (PARKING GARAGE OPTION)
PARKING GARAGE - POWER PLAN - THIRD FLOOR

SCALE: 1/16" = 1'-0"
EPROJECT NO.: 1363603
CONSTR. CONTR. NO.
NAVFAC DRAWING NO.: 12860405
SHEET 1184 OF 1412

PEP103

DRAWFORM REVISION: 25 AUGUST 2020

Autodesk Docs://2042 UMBAT 502 T35 Maintenance Hangar/2042 F35 maint Hangar_Parking Facility-Ex.rvt/T2024.rvt
1/14/2026 4:00:24 PM

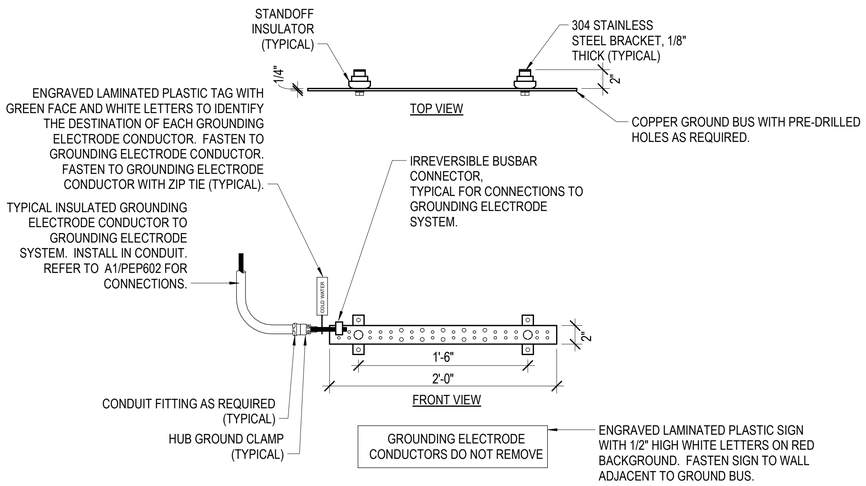

C1 TYPICAL ELECTRICAL ROOM GROUND BUS DETAIL

NOT TO SCALE

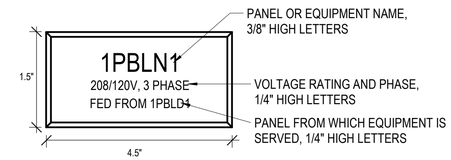

TYPICAL FOR:

1. PANELBOARDS
2. TRANSFORMERS
3. SWITCHBOARDS
4. SWITCHGEAR
5. MOTOR CONTROL CENTERS
6. LOAD INTERRUPTER SWITCHES
7. RELAY PANELS
8. CONTACTORS
9. CAPACITOR BANKS

COLOR CODE:

1. NORMAL: BLACK FACE WITH WHITE LETTERS

GENERAL NOTES:

A. PROVIDE LAMINATED PLASTIC NAMEPLATES FOR ALL EQUIPMENT ENCLOSURES AS INDICATED. NAMEPLATES SHALL BE MELAMINE PLASTIC, 0.125 INCH THICK WITH FACE AND CORE COLORS AS INDICATED. SURFACE SHALL HAVE A MATTE FINISH. CORNERS SHALL BE SQUARE AND EDGES SHALL BE BEVELED. ACCURATELY ALIGN LETTERING AND ENGRAVE INTO THE CORE.

B. NAME PLATE WIDTH SHALL BE 4.5". PROVIDE ADDITIONAL LINES OF TEXT AND INCREASE HEIGHT OF PLATE AS REQUIRED.

B4 ELECTRICAL EQUIPMENT IDENTIFICATION LABEL DETAIL

NOT TO SCALE

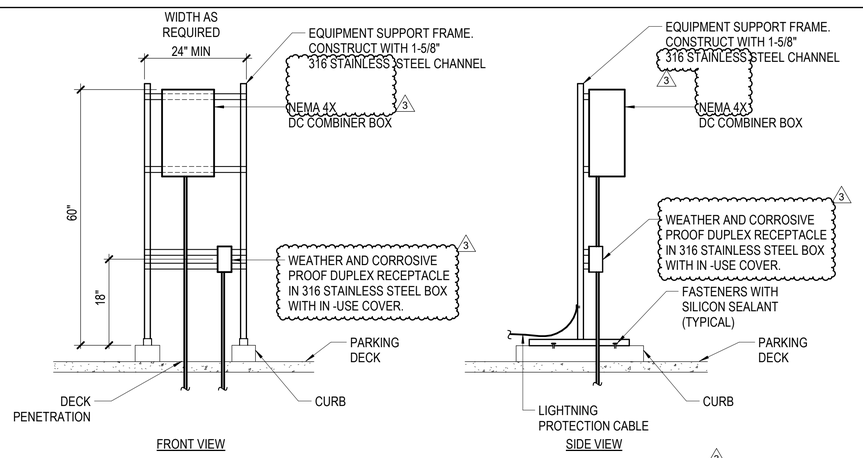

A1 ELECTRICAL EQUIPMENT RACK DETAIL

NOT TO SCALE

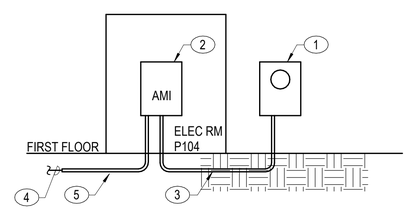

KEY NOTES: (C1/EP504)

1. ADVANCED ELECTRIC METER MOUNTED TO SIDE OF SERVICE TRANSFORMER.
2. ADVANCED METERING INFRASTRUCTURE EQUIPMENT CABINET. SEE C2/PEP101 FOR LOCATION.
3. 1" CONDUIT WITH NETWORKING WIRING AS REQUIRED. COORDINATE WITH PUBLIC WORKS AMI SYSTEM REPRESENTATIVE FOR WIRING REQUIREMENTS.
4. 6-STRAND SINGLE MODE FIBER OPTIC CABLE TO FIBER OPTIC PATCH PANEL IN HANGAR TELECOMMUNICATIONS ROOM 145.
5. TELECOMMUNICATIONS DUCTBANK FROM AMI CABINET TO TTH-1B. SEE SHEET TS105 IN VOLUME 1 FOR LOCATION AND ROUTING.

A3 METERING CONNECTION DIAGRAM - PARKING GARAGE

NOT TO SCALE

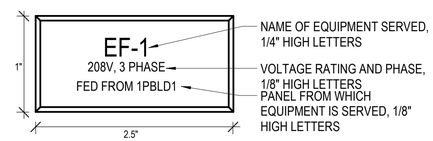

TYPICAL FOR:

1. DISCONNECT SWITCHES
2. ENCLOSED CIRCUIT BREAKERS
3. INDIVIDUAL MOTOR STARTERS
4. VARIABLE FREQUENCY DRIVES
5. STARTERS AND CONTROL PANELS PROVIDED WITH MECHANICAL EQUIPMENT

COLOR CODE:

1. NORMAL: BLACK FACE WITH WHITE LETTERS

GENERAL NOTES:

A. PROVIDE LAMINATED PLASTIC NAMEPLATES FOR ALL EQUIPMENT ENCLOSURES AS INDICATED. NAMEPLATES WILL BE MELAMINE PLASTIC, 0.125 INCH THICK WITH FACE AND CORE COLORS AS INDICATED. SURFACE WILL HAVE A MATTE FINISH. CORNERS WILL BE SQUARE AND EDGES WILL BE BEVELED. ACCURATELY ALIGN LETTERING AND ENGRAVE INTO THE CORE.

B. NAME PLATE WIDTH WILL BE 2 1/2". PROVIDE ADDITIONAL LINES OF TEXT AND INCREASE HEIGHT OF PLATE AS REQUIRED.

A4 MISCELLANEOUS ELECTRICAL EQUIPMENT LABEL DETAIL

NOT TO SCALE

NOTE:
IF THIS DRAWING IS LESS THAN 34" X 22"
IT IS A REDUCED SIZE DRAWING

STM	DESCRIPTION	DATE	APPR
1	MOD P00005	05/2023	
2	MOD P00006 AND MOD P00007	10/2025	
3	BY AMENDMENT	1/16/2026	

NAVFAC

NICHOLAS G. ZUBRZYCKI LICENSE No. 64239 STATE OF FLORIDA PROFESSIONAL ENGINEER 01/16/2026

BAMFORTH ENGINEERS - CONSULTANTS

APPROVED
FOR COMMANDER NAVFAC 1/26/2026

ACTIVITY
Approved by J. Scott Roberts, Asset Management Branch Head & Supervisory Facility Planner, PWD Beaufort, SC via email.

SATISFACTORY TO DATE 12/15/2022

DES	RLW	DRW RLW	CHK KLM
PMDM	KTB / RLH		
BRANCH MANAGER	JAS		
CHIEF ENG/ARCH	EJA		
FP ENGINEER	DSN		

DEPARTMENT OF THE NAVY
NAVAL FACILITIES ENGINEERING SYSTEMS COMMAND ~ MID-ATLANTIC
NORFOLK, VA
DC CORE:
MCAS BEAUFORT
BEAUFORT, SC

P-475 AIRCRAFT MAINTENANCE HANGAR - VOLUME 4 (PARKING GARAGE OPTION)

ELECTRICAL DETAILS

SCALE: As indicated
EPROJECT NO.: 1363603
CONSTR. CONTR. NO.
NAVFAC DRAWING NO. 12860406
SHEET 1185 OF 1412

PEP501

DRAWFORM REVISION: 25 AUGUST 2020

Autodesk Docs://2042 NAF A1 520 F35 Maintenance Hangar/2042-F35 -maint Hangar_Parking Facility-EL-R17D24.rvt
1/14/2026 4:00:34 PM

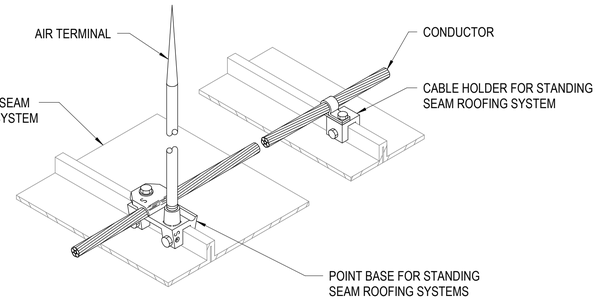

3 NOTE: ALL FASTENERS SHALL BE STAINLESS STEEL

C2 STANDING SEAM AIR TERMINAL - TYPE "A"

NOT TO SCALE

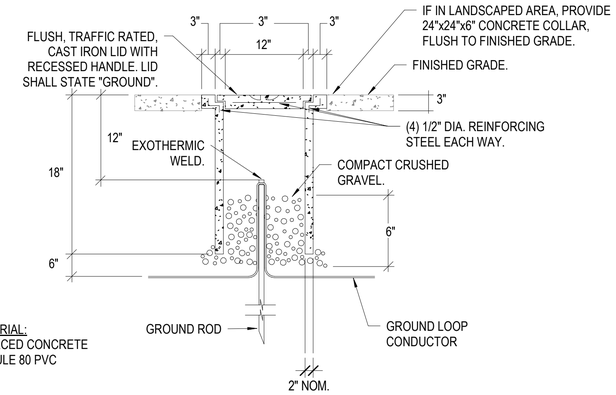

INSPECTION WELL MATERIAL:
IN CONCRETE - REINFORCED CONCRETE
IN LANDSCAPE - SCHEDULE 80 PVC

C4 GROUND ROD INSPECTION WELL

NOT TO SCALE

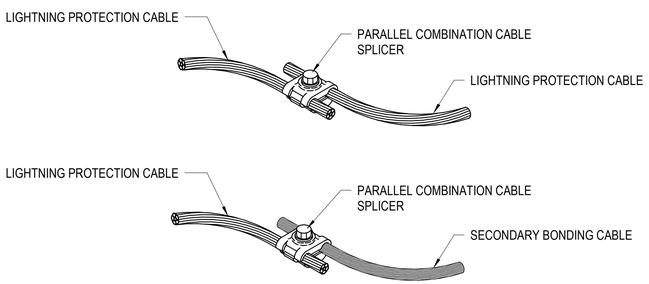

B1 TYPICAL CABLE SPLICERS

NOT TO SCALE

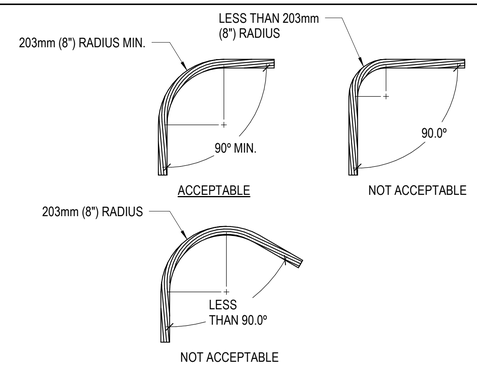

B2 TYPICAL CABLE BEND REQUIREMENTS

NOT TO SCALE

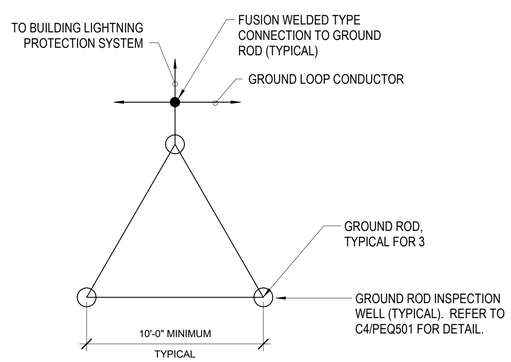

A2 GROUND ROD COUNTERPOISE CONFIGURATION

NOT TO SCALE

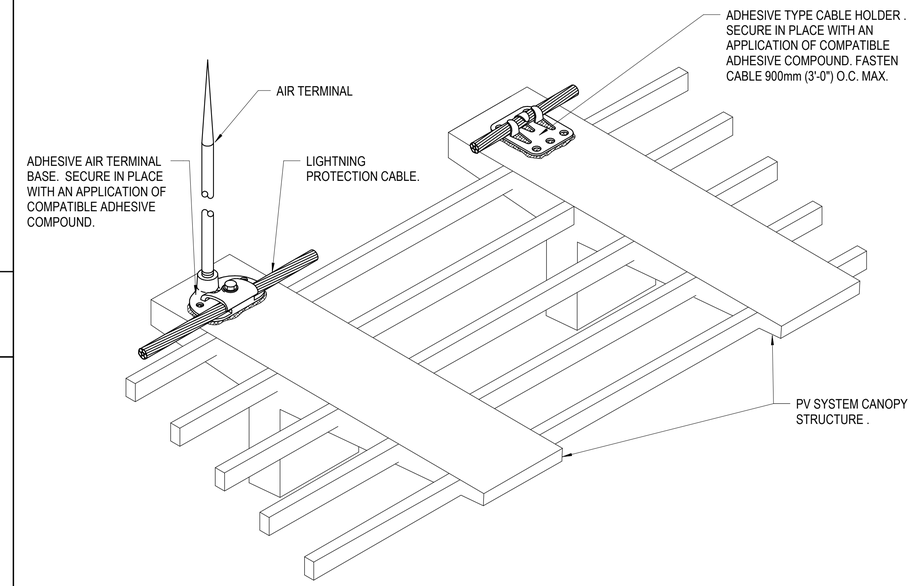

3 NOTE: ALL FASTENERS SHALL BE STAINLESS STEEL.

A4 ADHESIVE CANOPY AIR TERMINAL DETAIL, TYPE "B"

NOTE:
IF THIS DRAWING IS LESS THAN 34" X 22"
IT IS A REDUCED SIZE DRAWING

STM	DESCRIPTION	DATE	APPR
1	MOD P00005	05/2023	
2	MOD P00006 AND MOD P00007	10/2025	
3	BY AMENDMENT	1/16/2026	

NAVFAC

NICHOLAS G. ZUBRZYCKI LICENSE No. 64239 STATE OF FLORIDA PROFESSIONAL ENGINEER 01/16/2026

BAMFORTH ENGINEERS & ARCHITECTS

AE INFO

APPROVED
DEPUTY CHIEF, CIVIL DIV.
FOR COMMANDER NAVFAC 1/26/2026

ACTIVITY:
Approved by J. Scott Roberts,
Asset Management Branch Head &
Supervisory Facility Planner, PWD
Beaufort, SC via email.

SATISFACTORY TO DATE 12/15/2022

DES	RLW	DRW	RLW	CHK	KLM
PM/DM	KTB / RLH				
BRANCH MANAGER	JAS				
CHIEF ENG/ARCH	EJA				
FP ENGINEER	DSN				

DEPARTMENT OF THE NAVY
NAVAL FACILITIES ENGINEERING SYSTEMS COMMAND
DC CORE
NAVAL FACILITIES ENGINEERING SYSTEMS COMMAND – MID-ATLANTIC
NORFOLK, VA
MCAS BEAUFORT
BEAUFORT, SC
P-475 AIRCRAFT MAINTENANCE HANGAR - VOLUME 4 (PARKING GARAGE OPTION)
LIGHTNING PROTECTION DETAILS

SCALE: As indicated
EPROJECT NO.: 1363603
CONSTR. CONTR. NO.
NAVFAC DRAWING NO. 12860412
SHEET 1191 OF 1412

PEQ501

DRAWFORM REVISION: 25 AUGUST 2020

Autodesk Docs://20450 MFA1 502 F35 Maintenance Hangar/20443 F35 maint Hangar_Parking Facility/EL-RV/PEQ01.rvt
1/14/2026 4:00:43 PM