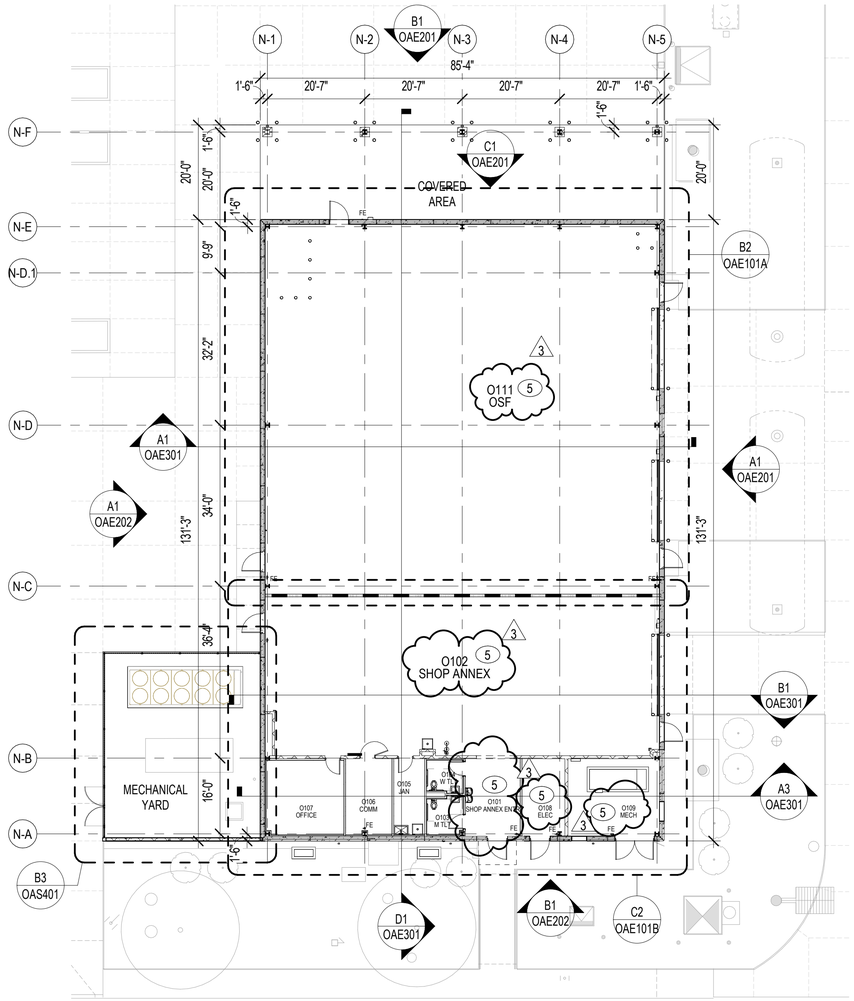

A1 FLOOR PLAN - GROUND FLOOR - OVERALL

1/16" = 1'-0"

OAE101A, OAE101B

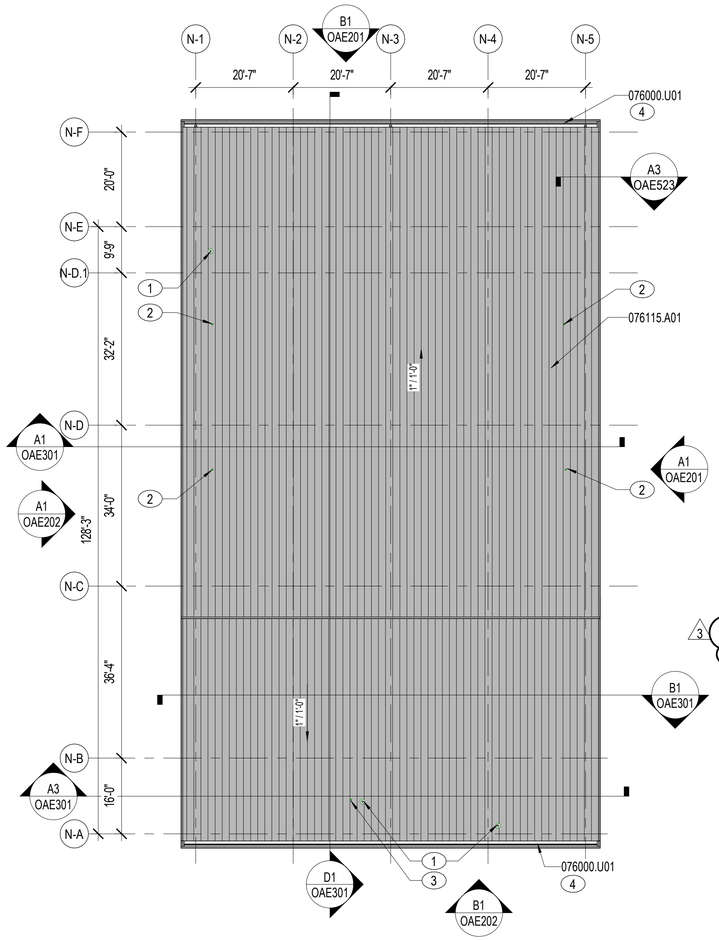

A3 ROOF PLAN - OVERALL

1/16" = 1'-0"

NOTES:

SHEET NOTES:

A REFER TO SHEETS OAE001 FOR GENERAL ABBREVIATIONS AND ARCHITECTURAL SYMBOLS.

B REFER TO VOLUME 1, SHEETS AS100 AND AS101A FOR ARCHITECTURAL SITE PLAN.

C REFER TO VOLUME 1, SHEETS CS104 AND CG104 FOR SITE LAYOUT AND GRADING INFORMATION.

D REFER TO VOLUME 1, SHEETS LP104 AND LF101 FOR LANDSCAPE, HARDSCAPE, SITE FURNISHING INFORMATION.

E REFER TO SHEET OGC001 FOR CODE SUMMARY AND OGC101 FOR LIFE SAFETY PLAN.

F REFER TO SHEETS OAE101A-OAE101B FOR PARTITION TYPES.

G REFER TO SHEETS OAE471-OAE472 FOR AIR BARRIER DIAGRAMS.

H SLOPED ROOFING COMPOSITION IS AN ALUMINUM STANDING SEAM METAL ROOFING PANEL ON 5/8" GLASS MAT COVER BOARD OVER 4" POLYISOCYANURATE RIGID BOARD INSULATION ON METAL DECK. REFER TO SPECIFICATION SECTION 07 61 15. REFER TO STRUCTURAL DRAWINGS FOR DECK INFORMATION.

I R-VALUE FOR ALL ROOF INSULATION IS TO BE EQUAL TO R-25 MINIMUM CONTINUOUS. INSULATION FOR DESIGN PURPOSES IS BASED ON 1" POLYISOCYANURATE INSULATION = R-6.

J ARROWS ON ROOF PLAN INDICATE ROOF SLOPE. STANDING SEAM METAL ROOF TO BE 1" PER FOOT MINIMUM.

K ARCHITECTURAL EXTERIOR DIMENSIONS ARE TO EXTERIOR FACE OF INSULATED PRECAST PANEL AND FACE OF METAL STUD, UNO.

KEY NOTES (00)

1 VTR. REFER TO SHEET OPP101A-OPP101B FOR ADDITIONAL INFORMATION. REFER TO C3/OAE541 FOR ROOF PENETRATION DETAIL.

2 RADIANT HEATER VENT. REFER TO SHEET OMH101A AND OMH502 FOR ADDITIONAL INFORMATION. REFER TO C3/OAE541 FOR ROOF PENETRATION DETAIL.

3 WATER HEATER FLUE. REFER TO SHEET OMH101B FOR ADDITIONAL INFORMATION. REFER TO SHEET C3/OAE541 FOR ROOF PENETRATION DETAIL.

4 CONCEALED GUTTER.

5 PROVIDE CORROSION PROTECTION AND CONTROL IN ACCORDANCE WITH AN ENVIRONMENTAL SEVERITY CLASSIFICATION (ESC) OF C4 FOR BUILDING SYSTEMS AND COMPONENTS. REFER TO SPECIFICATIONS FOR REQUIREMENTS.

MATERIAL NOTES

076000.U01 GUTTER

076115.A01 STANDING-SEAM METAL ROOF PANEL

PLUMBING FIXTURE SUMMARY OSF / SHOP ANNEX

FIXTURE COUNT PROVIDED [PER PROGRAM FOR DESIGN] (PFD)

RESTROOMS:
- MALE:
  - GROUND FLOOR:
    - (1) WATER CLOSETS
    - (1) LAVATORIES
- FEMALE:
  - GROUND FLOOR:
    - (1) WATER CLOSETS
    - (1) LAVATORIES

(1) "HI-LO" WATER FOUNTAINS WITH BOTTLE FILLER PROVIDED

(1) SERVICE SINKS PROVIDED

FIXTURE COUNT REQUIRED
UFC 3-420-01 - APPENDIX A-3, CHAPTER 4-D AND TABLES 403.1 AND 403.2

TOTAL NUMBER OF EMPLOYEES: **34**

PER TABLE 403.1 AND TABLE 403.2:

MINIMUM NUMBER OF FIXTURES REQUIRED PER TABLE 403.1 AND 403.2
- (2) WATER CLOSETS
- (2) LAVATORIES
- (1) DRINKING FOUNTAINS

FOR NAVY FACILITIES (CHAPTER 4-D):
OCCUPANCY: "BUSINESS"

MINIMUM NUMBER OF FIXTURES REQUIRED FOR NAVY FACILITIES
- (2) WATER CLOSETS
- (2) LAVATORIES
- (1) DRINKING FOUNTAINS
- (1) SERVICE SINK

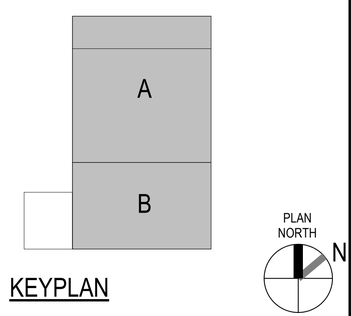

KEYPLAN

0 10' 20' 40' 60'

1/16" = 1'-0" GRAPHIC SCALE

NOTE:
IF THIS DRAWING IS LESS THAN 34" X 22"
IT IS A REDUCED SIZE DRAWING

SYM	DESCRIPTION	DATE	APPR
1	MOD P00005	05/2023	
2	MOD P00006 AND MOD P00007	10/2025	
3	BY AMENDMENT	1/16/2026	

NAVFAC

STATE OF FLORIDA
BILLY KEITH HOLLOWAY
AR93022
01/16/2026
REGISTERED ARCHITECT
SEAL

BAMFORTH
ENGINEERS + SURVEYORS

AE INFO

APPROVED
Kevin J. Grimes, P.E.
FOR COMMANDER NAVFAC

ACTIVITY
Approved by J. Scott Roberts, Asset Management Branch Head & Supervisory Facility Planner, PWD Beaufort, SC via email.

SATISFACTORY TO DATE	12/15/2022
DES EAD	DRW KJF / CHK BKH
PM/DM	KTB / RLH
BRANCH MANAGER	CGM
CHIEF ENG/ARCH	EJA
FP ENGINEER	DSN

DEPARTMENT OF THE NAVY
NAVAL FACILITIES ENGINEERING SYSTEMS COMMAND
DC CORE
NAVAL FACILITIES ENGINEERING SYSTEMS COMMAND ~ MID-ATLANTIC
NORFOLK, VA
MCAS BEAUFORT
BEAUFORT, SC
P-475 AIRCRAFT MAINTENANCE HANGAR - VOLUME 3 (OSF OPTION)
OSF / SHOP ANNEX - FLOOR PLAN AND ROOF PLAN - OVERALL

SCALE:	As indicated
EPROJECT NO.:	1363603
CONSTR. CONTR. NO.	
NAVFAC DRAWING NO.	12860134
SHEET	933 OF 1412

OAE101

DRAWFORM REVISION: 25 AUGUST 2020

Autodesk Docs://20042 MIFAT 502 F35 Maintenance Hangar/20042 F35 Maintenance Hangar_OSF Shop Annex.rvt
1/14/2026 4:33:00 PM

ROOM FINISH SCHEDULE										
ROOM NUMBER	ROOM NAME	FLOOR	BASE	WALLS				CEILING	REMARKS	PROJECT REVISION
				NORTH	EAST	SOUTH	WEST			
O101	SHOP ANNEX ENTRY	EPY-2	RB-1	P-1b	P-1b	P-1b	P-1b	EXP	1, 2	
O102	SHOP ANNEX	EPY-2	RB-1	P-1h	P-1h	P-1h	P-1h	EXP	2	
O103	M TLT	PFT-3	MTB-1	PWT-1	PWT-1	PWT-1	PWT-1	P-8e	3, 4	
O104	W TLT	PFT-3	MTB-1	PWT-1	PWT-1	PWT-1	PWT-1	P-8e	3, 4	
O105	JAN	CONCS-1	RB-1	P-1e	P-1e	P-1e	P-1e	EXP	2	
O106	COMM	CONCS-2	RB-1	P-1b	P-1b	P-1b	P-1b	EXP	2	
O107	OFFICE	SVT-1	RB-1	P-1b	P-1b	P-1b	P-1b	ACT-1		
O108	ELEC	CONCS-1	RB-1	P-1e	P-1e	P-1e	P-1e	EXP	2	
O109	MECH	CONCS-1	RB-1	P-1e	P-1e	P-1e	P-1e	EXP	2	
O111	OSF	EPY-2	RB-1	P-1h	P-1h	P-1h	P-1h	EXP	2	

FLOOR FINISH IDENTIFICATION									
FINISH CODE	MATERIAL	MANUFACTURER	MANUFACTURER NO.	PATTERN	COLOR	SIZE	GROUT	REMARKS	PROJECT REVISION
CONCS-1	SEALED CONCRETE	SHERWIN WILLIAMS	B90	ARMORSEAL TREAD PLEX	SW 7044 AMAZING GRAY	--	--	SLIP RESISTANT COATING	
CONCS-2	SEALED CONCRETE	SHERWIN WILLIAMS	--	RESUPRIME 3579, RESUFLOR 3725	SW 7044 AMAZING GRAY	--	--	SLIP RESISTANT COATING	
EPY-2	EPOXY RESINOUS FLOOR	STONHARD	--	PRIMER-GS-GS4-PA7-PA7	SILVER GRAY	1/4" THICK	--	5 COAT SYSTEM	
PFT-3	PORCELAIN FLOOR TILE	CAESAR CERAMICS USA	--	STYLE	ELEGANT	2"X2" MOSAICS, SHEET SIZE 12" X 12"	GRT-3		
SVT-1	SOLID VINYL TILE	JOHNSONITE TARKETT	--	ARIA 3.0	GYPSY MOTH 0655	24" X 24"	--	INSTALL ASHLAR PATTERN	

BASE FINISH IDENTIFICATION								
FINISH CODE	MATERIAL	MANUFACTURER	MANUFACTURER NO.	PATTERN	COLOR	SIZE	REMARKS	PROJECT REVISION
MTB-1	METAL BASE TRIM	SCHLUTER	--	DILEX-AHK 1S 100AE	ANODIZED ALUMINUM	3/8" RADIUS	INSTALL BETWEEN WALL TILE TO FLOOR TILE TRANSITION, INCLUDE INSIDE AND OUTSIDE CORNER TRIM	
RB-1	RUBBER BASE	JOHNSONITE TARKETT	TSB-636	COVE	BURNT UMBER	6"		

WALL FINISH IDENTIFICATION									
FINISH CODE	MATERIAL	MANUFACTURER	MANUFACTURER NO.	PATTERN	COLOR	SIZE	GROUT	REMARKS	PROJECT REVISION
P-1b	PAINT	SHERWIN WILLIAMS	SW 7648	EGG SHELL	BIG CHILL	--	--	--	
P-1e	PAINT	SHERWIN WILLIAMS	SW 7648	EPOXY	BIG CHILL	--	--	--	
P-1h	PAINT	SHERWIN WILLIAMS	SW 7648	EGG SHELL, PRO MAR 200 HP, B20-1900 SEREIES	BIG CHILL	--	--	HIGH PERFORMANCE PAINT	
PWT-1	PORCELAIN WALL TILE	CAESAR CERAMICS USA	--	RUN	SALT	12 X 24	GRT-1	INSTALL ASHLAR TILE WITH 1/3 OFFSET	

CEILING FINISH IDENTIFICATION									
FINISH CODE	MATERIAL	MANUFACTURER	MANUFACTURER NO.	PATTERN	COLOR	SIZE	GRIID	REMARKS	PROJECT REVISION
ACT-1	ACOUSTICAL CEILING TILE	ARMSTRONG	2846	CALLA HIGH NRC	WHITE	24" x 24" X 1-3 /4"THICK	15 /16" PRELUDE XL WHITE	--	
P-8e	PAINT	SHERWIN WILLIAMS	SW 7007	EPOXY	CEILING BRIGHT WHITE	--	--	--	
P-8h	PAINT	SHERWIN WILLIAMS	SW 7007	FLAT, DURATION HOME, A96 SERIES	CEILING BRIGHT WHITE	--	--	EXPOSED PIPES, CABLES, AND DUCTS	

MISCELLANEOUS FINISH IDENTIFICATION								
FINISH CODE	MATERIAL	MANUFACTURER	MANUFACTURER NO.	PATTERN	COLOR	SIZE	ID FINISH REMARKS	PROJECT REVISION
CG-2	CORNER GUARD	CS GROUP	CO-8	CO SERIES, SURFACE MOUNT	304 STAINLESS STEEL, #4 SATIN FINISH	2"W x 2"W x 84"H	OUTSIDE CORNER LOCATIONS, INSTALL ABOVE WALL BASE	
GRT-1	GROUT, EPOXY	MAPEI	14	--	BISCUIT	--	WALL TILE GROUT	
GRT-3	GROUT, EPOXY	MAPEI	27	--	SILVER	--	FLOOR TILE GROUT	
P-3d	PAINT	SHERWIN WILLIAMS	SW 7660	SEMIGLOSS FINISH	EARL GREY	--	STEEL DOOR INTERIOR PAINT	
SSM-5	SOLID SURFACE MATERIAL	CORIAN	--	--	RAIN STREAK	48"W X 96"H X 1/2" THICK	INSTALL AT WATER FOUNTAIN WALL ABOVE WALL BASE, OUTSIDE TRIM,TR-2	
SST-2	STAINLESS STEEL	INPRO CORPORATION	--	STANDARD STAINLESS STEEL, 18 GAUGE, TYPE 304	STAINLESS STEEL, SATIN FINISH	48"W X 120"L PANEL	JANITOR AND SHOP SINK WALL WAINSCOT, TRIMMED TO SIZES IN FINISH PLANS	
TR-1	METAL EDGE TRIM	SCHLUTER	RO 100 E	RONDEC	STAINLESS STEEL 304	3/8"H	OUTSIDE CORNER PORCELAIN TILE TRIM	
TR-2	METAL EDGE TRIM	SCHLUTER	JOLLY A 125 AT	JOLLY	SATIN ANODIZED ALUMINUM	1 /2"H	SOLID SURFACE PANEL FINISHING EDGE TRIM	
TR-7	METAL EDGE TRIM	SCHLUTER	DILEX-AHK	--	ANODIZED ALUMINUM	RADIUS SIZED TO WALL TILE	INSIDE CORNER PORCELAIN TILE TRIM, VERIFY SIZE IN FIELD	
TS-1	TRANSITION STRIP	CORIAN	--	--	NEUTRAL AGGREGATE	--	TRANSITION FROM PORCELAIN FLOOR TILE TO EPOXY FLOOR, REFER TO SPEC SECTION 066116	
TS-5	TRANSITION STRIP	TARKETT	ME001	METAL EDGE	00179 STEEL	--	TRANSITION FROM RESILIENT FLOOR TO EPOXY FLOOR, EPY-2	

NOTES:

SHEET NOTES:

A FINISH SCHEDULE FOLLOWS SHEET NORTH.

B REFER TO REFLECTED CEILING PLAN SHEET OAE111 FOR CEILING HEIGHTS AND DESIGN COORDINATION.

C COLOR DESIGNATIONS SHALL BE AS INDICATED IN SHEET OAF601 FOR FINISH IDENTIFICATION SCHEDULES.

D REFER TO WALL FINISH PLANS SHEETS OIN111 FOR ROOMS WITH MULTIPLE WALL FINISHES LISTED.

E INTERIOR DOOR FRAMES AND INTERIOR WINDOW FRAMES SHALL MATCH ADJACENT WALL, UNLESS NOTED OTHERWISE.

F FLOOR TRANSITIONS BETWEEN ROOMS TO BE AT CENTERLINE OF DOOR UNLESS NOTED OTHERWISE

G FINISHES INDICATED ARE THE APPROVED BASIS OF DESIGN TO CONVEY COLOR, PATTERN, TEXTURE AND SALIENT CHARACTERISTICS ONLY. THE LISTING OF MANUFACTURER INFORMATION IS NOT INTENDED TO LIMIT THE SELECTION OF PRODUCTS PROVIDED BY OTHER MANUFACTURERS. PRODUCT SUBSTITUTIONS MEETING THESE CRITERIA WILL BE CONSIDERED AND MUST BE REVIEWEED BY THE INTERIOR DESIGNER AND APPROVED BY THE CONTRACTING OFFICER.

H PAINT WALL BEHIND CORNER GUARDS AS SCHEDULED IN FINISH SCHEDULE.

I CHANGES IN LEVEL OF 1/4" HIGH MAX SHALL BE PERMITTED TO BE VERTICAL. CHANGES IN LEVEL BETWEEN 1/4" HIGH MINIMUM AND 1/2" HIGH MAXIMUM SHALL BE BEVELED WITH A SLOPE NO STEEPER THAN 1:2.

K REFER TO SHEET OAE101 OSF / SHOP ANNEX - FLOOR PLAN AND ROOF PLAN - OVERALL FOR ROOMS THAT REQUIRE CORROSION PROTECTION AND CONTROL IN accordance WITH ENVIRONMENTAL SEVERITY CLASSIFICATION (ESC) C4.

3

FINISH REMARKS

1 REFER TO FINISH PLAN SHEET OIN111 FOR WM-1 LOCATION.
2 PAINT ALL EXPOSED STRUCTURE, PIPE, CABLES AND DUCTS, P-8h.
3 PORCELAIN FLOOR TILE, INSTALL IN ASHLAR PATTERN WITH 1/3 OFFSET.
4 TR-1 METAL EDGE TRIM FOR OUTSIDE CORNERS, TR-7 METAL EDGE TRIM FOR INSIDE CORNERS.

FINISH ABBREVIATIONS

ACT	ACOUSTICAL CEILING TILE
CG	CORNER GUARD
CONCS	SEALED CONCRETE
EPY	EPOXY RESINOUS FLOOR
EXP	EXPOSED CEILING
GRT	GROUT
MTB	METAL BASE TRIM
P	PAINT
P-b	EGGSHELL
P-d	SEMIGLOSS
P-e	EPOXY
P-h	HIGH PERFORMANCE PAINT
PFT	PORCELAIN FLOOR TILE
PWT	PORCELAIN WALL TILE
RB	RUBBER BASE
SSM	SOLID SURFACE MATERIAL
SST	STAINLESS STEEL
SVT	SOLID VINYL TILE
TR	EDGE TRIM
TS	TRANSITION STRIP
WM	WALK-OFF MAT

NOTE:
IF THIS DRAWING IS LESS THAN 34" X 22"
IT IS A REDUCED SIZE DRAWING

SYM	DESCRIPTION	DATE	APPR
1	MOD P00005	05/2023	
2	MOD P00006 AND MOD P00007	10/2025	
3	BY AMENDMENT	1/16/2026	

NAVFAC

STATE OF FLORIDA
CYNTHIA McMILLAN WINKLER
LICENSED INTERIOR DESIGNER
No. 3433
01/16/2026
SEAL

BAMFORTH
ARCHITECTURE · INTERIOR DESIGN

A/E INFO

APPROVED
Jason D. Donohoe, P.E.
FOR COMMANDER NAVFAC
ACTIVITY: Approved by J. Scott Roberts, Asset Management Branch Head & Supervisory Facility Planner, PWD Beaufort, SC via email.
SATISFACTORY TO DATE 12/15/2022

DES KLB	DRW JKW	CHK KLB	
PMDM	KTB / RLH		
BRANCH MANAGER	CGM		
CHIEF ENG/ARCH	EJA		
FP ENGINEER	DSN		

DEPARTMENT OF THE NAVY
NAVAL FACILITIES ENGINEERING SYSTEMS COMMAND ~ MID-ATLANTIC
NORFOLK, VA
DC CODE
MCAS BEAUFORT
BEAUFORT, SC
P-475 AIRCRAFT MAINTENANCE HANGAR - VOLUME 3 (OSF OPTION)
FINISH SCHEDULE AND FINISH IDENTIFICATION

SCALE:
EPROJECT NO.: 1363603
CONSTR. CONTR. NO.
NAVFAC DRAWING NO. 12860170
SHEET 969 OF 1412
OAF601

DRAWFORM REVISION: 25 AUGUST 2020

Autodesk Docs://20042 MFAF 502 F35 Maintenance Hangar/20042 F35 Maint Hangar_OSF Shop Annex.rvt
1/13/2026 12:41:15 PM

SINGLE LINE DIAGRAM

SYMBOL	DESCRIPTION
1OLN1	PANELBOARD. WHEN ADDITIONAL SYMBOL(S) ARE INCLUDED, THEY INDICATE THE FOLLOWING: MAIN CIRCUIT BREAKER. SEE PANEL SCHEDULE FOR SIZE. IF NOT PRESENT, PANELBOARD WITH MAIN LUGS ONLY.
3P 100 A	CIRCUIT BREAKER WITH NUMBER OF POLES AND TRIP RATING AS INDICATED.
3P 100 A ETM M	ELECTRONIC TRIP BREAKER WITH INTEGRAL POWER MONITORING METER. NUMBER OF POLES AND TRIP RATING AS INDICATED. METERING IDENTIFICATION CODES AS FOLLOWS: L - LIGHTING LOADS R - RECEPTACLE LOADS M - MECHANICAL EQUIPMENT LOADS
	ADDITIONAL CIRCUIT BREAKER SUBSCRIPTS INDICATE THE FOLLOWING: ET - SOLID STATE ELECTRONIC TRIP CIRCUIT BREAKER WITH FIELD ADJUSTABLE LONG TIME PICKUP, SHORT TIME PICKUP, SHORT TIME DELAY, AND INSTANTANEOUS TRIP FUNCTIONS. ETM - SOLID STATE ELECTRONIC TRIP CIRCUIT BREAKER WITH INTEGRAL POWER METERING, BREAKER STATUS, AND FIELD ADJUSTABLE LONG TIME PICKUP, SHORT TIME PICKUP, SHORT TIME DELAY, AND INSTANTANEOUS TRIP FUNCTIONS. METERING AND STATUS SHALL BE CONNECTED TO THE POWER MONITORING SYSTEM VIA NETWORK CABLING.
M	MULTIFUNCTION DIGITAL POWER CIRCUIT MONITOR.
SPD	PARALLEL CONNECTED SURGE PROTECTIVE DEVICE. SEE SURGE PROTECTIVE DEVICE SCHEDULE ON SHEET OEP700.
4 / EP600 / T-3	FEEDER CONTINUATION SYMBOL FEEDER REFERENCE SHEET ON WHICH FEEDER IS CONTINUED EQUIPMENT OR PANEL TO WHICH FEEDER IS CONNECTED

POWER DISTRIBUTION

SYMBOL	DESCRIPTION	MOUNTING
	SURFACE MOUNTED PANELBOARD	72" AFF TO TOP
	SURFACE MOUNTED DISTRIBUTION PANELBOARD	72" AFF TO TOP
	GROUNDING BUS BAR, SUBSCRIPT INDICATES NAME. REFER TO A1/OEP600 FOR DETAIL.	18" AFF TO TOP
30A 3R	600V, 3P, NON-FUSED DISCONNECT SWITCH. ALL DISCONNECT SWITCHES SHALL BE NEMA 1 UNLESS OTHERWISE INDICATED. SUBSCRIPTS INDICATE THE FOLLOWING: 30A - AMPERE RATING 3R - NEMA ENCLOSURE OTHER THAN NEMA 1 (3R, 4X, ETC...)	72" AFF TO TOP
L-30-3Φ 3R	COMBINATION MAGNETIC STARTER/DISCONNECT SWITCH IN NEMA 1 ENCLOSURE UNLESS OTHERWISE INDICATED. SEE MOTOR STARTER SCHEDULE ON SHEET OEP700 FOR STARTER CHARACTERISTICS, AND HOME RUN MOTOR BRANCH CIRCUIT SIZE. MOTOR BRANCH CIRCUIT SIZE SHALL BE THE SAME FROM THE STARTER TO MOTOR. MINIMUM SHORT CIRCUIT RATING SHALL MATCH THE UPSTREAM OVERCURRENT PROTECTIVE DEVICE. SEE SHEET OEP700 FOR STARTER WIRING DIAGRAMS. SUBSCRIPTS INDICATE THE FOLLOWING: L-30-3Φ PHASE MOTOR HP RATING L1- 120V L2 - 208V 3R - NEMA ENCLOSURE OTHER THAN NEMA 1 (3R, 4X, ETC...)	72" AFF TO TOP
VFD L-30-3Φ 3R	VARIABLE FREQUENCY DRIVE. SEE VARIABLE FREQUENCY DRIVE SCHEDULE ON SHEET OEP700 FOR VFD CHARACTERISTICS, AND HOME RUN MOTOR BRANCH CIRCUIT SIZE. MINIMUM SHORT CIRCUIT RATING SHALL MATCH THE UPSTREAM OVERCURRENT PROTECTIVE DEVICE. MOTOR BRANCH CIRCUIT SIZE SHALL BE THE SAME FROM THE VFD TO MOTOR. SEE SHEET OEP700 FOR VFD WIRING DIAGRAMS. SUBSCRIPTS INDICATE THE FOLLOWING: L-30-3Φ PHASE MOTOR HP RATING L - 208V 3R - NEMA ENCLOSURE OTHER THAN NEMA 1 (3R, 4X, ETC...)	72" AFF TO TOP, UON

WIRING DEVICES

NOTES: ALL MOUNTING HEIGHTS ARE TO TOP, UON
SUBSCRIPTS FOR RECEPTACLES INDICATE THE FOLLOWING:
G - INTEGRAL GFCI.
+48" - MOUNT AT 48" AFF TO CENTER. OTHER MOUNTING HEIGHTS AS INDICATED.
WP - RECEPTACLE WITH WEATHER RESISTANT MARKING (WR) MOUNTED IN A IN-USE WEATHER PROOF ENCLOSURE.
EWC - WITH INTEGRAL GFCI FOR ELECTRIC WATER COOLER. MOUNTING HEIGHT AS REQUIRED.

SYMBOL	DESCRIPTION	MOUNTING
	20A, 125V DUPLEX RECEPTACLE.	18" AFF
	20A, 125V SIMPLEX RECEPTACLE.	18" AFF
	CONTROLLED RECEPTACLE, 20A, 125V SPLIT CIRCUIT DUPLEX RECEPTACLE WITH THE UPPER RECEPTACLE MARKED WITH A POWER SYMBOL AND THE WORD CONTROLLED. THE UPPER RECEPTACLE SHALL BE CONTROLLED BY THE DIGITAL LIGHTING AND PLUG CONTROL SYSTEM. THE LOWER RECEPTACLE SHALL NOT BE CONTROLLED.	18" AFF
	20A, 125V CEILING MOUNTED DUPLEX RECEPTACLE.	AS INDICATED
NEMA	SPECIAL RECEPTACLE WITH NEMA CONFIGURATION AS INDICATED.	18" AFF
	RETRACTABLE CORD REEL. STEEL CONSTRUCTION WITH BLACK POWDER COAT FINISH, BLACK THREE CONDUCTOR (#12AWG), 30 FOOT, TYPE SJOW CORD WITH BLACK 20A DUPLEX RECEPTACLE ON PAYOUT END, ADJUSTABLE BALL STOP, AND STEEL MOUNTING BASE. ADJUST BALL STOP SUCH THAT THE RECEPTACLE IS AT 6'-6" AFF TO BOTTOM WHEN RETRACTED. MOUNT WITHIN 12" OF RECEPTACLE SERVING THE CORD REEL.	STRUCTURE ABOVE

CONDUIT AND CONDUCTORS

SYMBOL	DESCRIPTION
	BRANCH CIRCUIT WIRING IN CONDUIT. 1/2"C - 2#12 + 1#12 GND UON. PROVIDE ADDITIONAL SWITCHED CONDUCTORS OR TRAVELER CONDUCTORS FOR LIGHTING CIRCUITS AS REQUIRED TO SUPPORT THE INDICATED SWITCHING.
	HOMERUN TO PANELBOARD: 1OLN1 - 1,3,5 CIRCUIT DESIGNATION. PANELBOARD DESIGNATION.
3#6+1#10G 3/4"C	CONDUIT AND CONDUCTOR SIZES AS INDICATED.

EQUIPMENT CONNECTIONS

SYMBOL	DESCRIPTION	MOUNTING
J	JUNCTION BOX OR PULL BOX	AS INDICATED
2	MOTOR CONNECTION. NUMERAL INDICATES HORSEPOWER.	NA
E FCU/A	CONNECTION TO EQUIPMENT LEADS, TERMINAL STRIPS OR CONTROL PANEL INCLUDING ALL CONDUCTORS, CONDUIT, FLEXIBLE CONDUIT, JUNCTION BOXES, CONNECTORS, FITTINGS, ETC., REQUIRED FOR PROPER CONNECTION. COORDINATE EXACT LOCATION WITH THE SUPPLIED EQUIPMENT. SUBSCRIPT INDICATES EQUIPMENT IDENTIFICATION.	AS REQUIRED

POWER DISTRIBUTION EQUIPMENT CODES

1 O L S 1
EQUIPMENT CODE:
1,2,3 - SEQUENCE
N - NORMAL BRANCH
D - DISTRIBUTION PANEL (WHERE PRESENT)
L - 208Y/120V
BUILDING DESIGNATION
FLOOR LEVEL

20A 120V RECEPTACLE BRANCH CIRCUIT HOMERUN SCHEDULE

HOMERUN LENGTH	CONDUCTOR SIZE
0-50 FEET	#12 AWG COPPER
51-100 FEET	#10 AWG COPPER
101-150 FEET	#8 AWG COPPER

NOTES:
A. THE CONDUCTOR SIZES SHOWN ARE FOR THE PHASE, NUETRAL AND GROUND CONDUCTORS.
B. FINAL CONNECTIONS TO RECEPTACLES WILL BE #12 AWG COPPER MAXIMUM. PROVIDE JUNCTION BOX ABOVE FINISHED ACCESSIBLE CEILING AS CLOSE AS POSSIBLE TO THE RECEPTACLES SERVED FOR CONDUCTOR TRANSISTIONS.

CONTROL DIAGRAM SYMBOLS

SYMBOL	DESCRIPTION
	NORMALLY OPEN CONTACT (N.O.)
	NORMALLY CLOSED CONTACT (N.C.)
C	OPERATING COIL
G	PILOT LIGHT "R" INDICATES RED, "G" INDICATES GREEN
	CONTROL CIRCUIT FUSE
OL	OVERLOAD RELAY CONTACT
H O A	HAND-OFF-AUTO AUTOMATIC SELECTOR SWITCH
	CONDUCTOR CONNECTION

LIGHTNING PROTECTION SYSTEM

SYMBOL	DESCRIPTION
	AIR TERMINAL. SUBSCRIPTS INDICATE THE FOLLOWING: A - STANDING SEAM METAL ROOF MOUNTED AIR TERMINAL. SEE C4/OEQ501 FOR DETAIL.
	LIGHTNING PROTECTION SYSTEM ROOF CONDUCTOR.
GL	LIGHTNING PROTECTION SYSTEM GROUND LOOP CONDUCTOR. BURY IN DIRECT CONTACT WITH EARTH AT 24" BELOW FINISHED GRADE.
	GROUND RODS BONDED TO GROUND LOOP CONDUCTOR. SEE C4/OEQ502 FOR DETAIL.
	BONDING CONNECTION.
DN1	CONCEALED THROUGH ROOF CONDUCTOR DETAIL. SEE C1/OEQ501 FOR DETAIL.
DN2	EXPOSED ROOF DOWN CONDUCTOR DETAIL. SEE SHEET OEQ111 FOR REQUIREMENTS.

MISCELLANEOUS

SYMBOL	DESCRIPTION	MOUNTING
00	KEY NOTE SYMBOL.	NA
	ELECTRICAL GROUND	NA
	CONDUCTOR CONNECTION	NA

ABBREVIATIONS

A	AMPERES	JB	JUNCTION BOX
AFC	ABOVE FINISHED CEILING	KAIC	KILO-AMPERES INTERRUPTING CAPACITY
AFF	ABOVE FINISHED FLOOR		
AFG	ABOVE FINISHED GRADE	KV	KILO-VOLTS
AHU	AIR HANDLING UNIT	KVA	KILO-VOLTS-AMPERES
AIC	AMPERES INTERRUPTING CAPACITY	KVAR	KILO-VOLTS-AMPERES REACTIVE
ATS	AUTOMATIC TRANSFER SWITCH	KW	KILO-WATTS
AWG	AMERICAN WIRE GAUGE	KWH	KILO-WATT-HOURS
BFC	BELOW FINISHED CEILING	LAN	LOCAL AREA NETWORK
BFG	BELOW FINISHED GRADE	LED	LIGHT-EMITTING DIODE
C	CONDUIT	LTG	LIGHTING
CAB	CABINET	m	METER
CATV	CABLE TELEVISION	mm	MILLIMETER
CCTV	CLOSED CIRCUIT TELEVISION	MAX	MAXIMUM
CH	CHILLER	MCB	MAIN CIRCUIT BREAKER
CKT	CIRCUIT	MCC	MOTOR CONTROL CENTER
CL	CENTERLINE	MCP	MOTOR CIRCUIT PROTECTOR
CLG	CEILING	MFR	MANUFACTURER
CTs	CURRENT TRANSFORMERS	MIN	MINIMUM
CU	COPPER	MISC	MISCELLANEOUS
DISC	DISCONNECT(ING)	MTR	MOTOR
DWG	DRAWING(S)	MTD	MOUNTED
EA	EACH	MTG	MOUNTING
EF	EXHAUST FAN	MTS	MANUAL TRANSFER SWITCH
EMT	ELECTRICAL METALLIC TUBING	N.C.	NORMALLY CLOSED
EQUIP	EQUIPMENT	N.O.	NORMALLY OPEN
EUH	ELECTRIC UNIT HEATER	NA	NOT APPLICABLE
EWC	ELECTRIC WATER COOLER	NC	NURSE CALL
EWH	ELECTRIC WATER HEATER	NEC	NATIONAL ELECTRICAL CODE
EXH	EXHAUST	NFPA	NATIONAL FIRE PROTECTION ASSOCIATION
EXIST	EXISTING		
FA	FIRE ALARM	PNL	PANEL
FLUOR	FLUORESCENT	PVC	POLYVINYL CHLORIDE
G	GROUND	REC	RECEPTACLE
GEN	ENGINE GENERATOR SET	RGS	RIGID GALVANIZED STEEL
GFI	GROUND FAULT INTERRUPTER	SF	SUPPLY FAN
GFCI	GROUND FAULT CIRCUIT INTERRUPTER	TEL	TELEPHONE
GFGI	GOVERNMENT FURNISHED, GOVERNMENT INSTALLED	TYP	TYPICAL
		UH	UNIT HEATER
GFP	GROUND FAULT PROTECTION	UON	UNLESS OTHERWISE NOTED
GND	GROUND	V	VOLTS
HGT	HEIGHT	VA	VOLT-AMPERES
HOA	HAND-OFF-AUTOMATIC	VAV	VARIABLE AIR VOLUME UNIT
HP	HORSEPOWER	W	WATTS
HVAC	HEATING/VENTILATING / AIR CONDITIONING	WAP	WIRELESS ACCESS POINT
		WP	WEATHER PROOF
HV	HIGH VOLTAGE	XFMR	TRANSFORMER
INC	INCANDESCENT		

GENERAL NOTES

A. SEE REFLECTED CEILING PLANS FOR EXACT LOCATION OF CEILING MOUNTED LUMINAIRES AND DEVICES.
B. INSTALL ALL EQUIPMENT AND DEVICES AT THE HEIGHT INDICATED. REFER TO ARCHITECTURAL INTERIOR ELEVATIONS FOR SPECIAL MOUNTING HEIGHTS AND LOCATIONS OF ELECTRICAL AND COMMUNICATIONS DEVICES. MOUNTING HEIGHTS AND LOCATIONS INDICATED ON ARCHITECTURAL ELEVATIONS TAKE PRECEDENCE OVER OTHER MOUNTING HEIGHTS AND LOCATIONS.
C. LUMINAIRE TYPES INDICATED AS FOLLOWS: UPPER CASE LETTER WITH NUMERAL DENOTES FIXTURE TYPE (SEE LUMINAIRE SCHEDULE), LOWER CASE LETTER (IF SHOWN) DENOTES SWITCHING ARRANGEMENT.
D. ALL MATERIALS AND EQUIPMENT WILL BE LISTED AS COMPLYING WITH THE APPLICABLE STANDARDS OF UNDERWRITER'S LABORATORIES, INC OR OTHER APPROVED LISTING AGENCIES.
E. CONDUCTOR AMPACITIES ARE BASED ON 60° C COPPER FOR #12 AWG THROUGH #1 AWG CONDUCTORS. CONDUCTOR AMPACITIES ARE BASED ON 75° C COPPER FOR CONDUCTORS LARGER THAN #1 AWG.
F. ALL CONDUIT SIZES ARE BASED ON ELECTRICAL METALLIC TUBING (EMT) WITH TYPE THHN/THWN COPPER CONDUCTORS. ADJUST CONDUIT SIZE AS REQUIRED FOR OTHER CONDUIT MATERIALS AND CONDUCTOR TYPES.
G. THE PANELBOARD SUPPLIER IS RESPONSIBLE FOR PROVIDING OVERCURRENT PROTECTIVE DEVICES THAT ARE SELECTIVELY COORDINATED. REFER TO SPECIFICATION SECTION 26 28 01.00 10 FOR REQUIREMENTS.
H. WHERE CONDUIT IS ROUTED ABOVE THE FINISHED CEILING, COORDINATE LOCATION AND ROUTING WITH OTHER TRADES AND SYSTEMS TO PROVIDE A COORDINATED INSTALLATION AND TO ASSURE MAXIMUM ACCESSIBILITY TO ALL SYSTEMS. ALL JUNCTION BOXES AND PULL BOXES WILL REMAIN ACCESSIBLE.
I. WHEN CONTRACTOR FURNISHED EQUIPMENT INCLUDING BUT NOT LIMITED TO ARCHITECTURAL HARDWARE (I.E. WINDOW SHADES, OVERHEAD COILING DOORS AND GRILLS, POWER OPERATED DOORS, ETC...), PLUMBING EQUIPMENT, AND HVAC EQUIPMENT SIZE OR ELECTRICAL CHARACTERISTICS PROVIDED DIFFERS FROM SIZE OR ELECTRICAL CHARACTERISTICS INDICATED OR SPECIFIED, MAKE ALL NECESSARY ADJUSTMENTS TO ELECTRICAL BOXES, CONDUIT, WIRING, DISCONNECT DEVICES, BRANCH CIRCUIT PROTECTION, AND RELATED ELECTRICAL DISTRIBUTION EQUIPMENT INCLUDING ANY ELECTRICAL REDESIGN AS REQUIRED TO ACCOMMODATE EQUIPMENT ACTUALLY PROVIDED.
J. DO NOT MOUNT ELECTRICAL OR COMMUNICATIONS DEVICES, OUTLETS, OR BOXES BACK TO BACK UNLESS SPECIFICALLY INDICATED OTHERWISE NOTED. IN WALLS WITH A STC RATING OF 50 OR MORE, OFFSET OUTLETS OR BOXES IN OPPOSITE SIDES OF THE WALL BY AT LEAST ONE STUD CAVITY.
K. PROVIDE SEPARATE NEUTRAL CONDUCTOR FOR EACH 277V AND 120V BRANCH CIRCUIT, UON. MULTIPLE 20A BRANCH CIRCUITS FROM THE SAME PANELBOARD MAY BE COMBINED IN A SINGLE 1/2" CONDUIT HOME RUN, MAXIMUM OF (3) CIRCUIT PER HOME RUN.
L. MAINTAIN 18" CLEAR SPACE ABOVE ALL CABLE TRAYS. MAINTAIN AT LEAST 12" CLEAR SPACE ON ONE SIDE OF ALL CABLE TRAYS FOR SIDE ACCESS TO THE CABLE TRAYS.
M. ALL CEILING MOUNTED LIGHTING OCCUPANCY SENSORS AND FIRE ALARM SMOKE DETECTORS WILL BE LOCATED SUCH THAT THERE IS A MINIMUM OF 36" BETWEEN THE SENSOR AND ANY HVAC RETURN/SUPPLY DIFFUSERS.
N. WHERE CONDUITS ARE ROUTED ABOVE FINISHED CEILING, COORDINATE LOCATION AND ROUTING WITH OTHER TRADES AND SYSTEMS TO PROVIDE A COORDINATED INSTALLATION AND TO ASSURE MAXIMUM ACCESSIBILITY TO ALL SYSTEMS. ALL JUNCTION BOXES AND PULL BOXES SHALL REMAIN ACCESSIBLE.
O. SEE C1/OEG002 FOR EQUIPMENT IDENTIFICATION LABEL DETAIL.
P. SEE A1/OEG002 FOR MISCELLANEOUS EQUIPMENT IDENTIFICATION LABEL DETAIL.
Q. PROVIDE DISCONNECTING MEANS FOR MISCELLANEOUS MOTOR LOADS AS REQUIRED BY NFPA 70.
R. PROVIDE CORROSION PROTECTION AND CONTROL FOR BUILDING SYSTEMS AND COMPONENTS IN ACCORDANCE WITH ENVIRONMENTAL SEVERITY CLASSIFICATION (ESC) C4 IN ACCORDANCE WITH UFC 1-200-01, DOD BUILDING CODE, CHAPTER 4. REFER TO SHEET OAE101 FOR IDENTIFICATION OF THE SPECIFIC ROOMS AND AREAS WHERE THESE REQUIREMENTS APPLY. WITHIN THESE AREAS, ALL CONDUIT SHALL BE RIGID GALVANIZED STEEL, AND ALL FASTENERS, FITTINGS, AND HANGERS SHALL BE TYPE 316 STAINLESS STEEL. COMPLY WITH ALL OTHER APPLICABLE SPECIFICATION REQUIREMENTS.

NOTE:
IF THIS DRAWING IS LESS THAN 34" X 22"
IT IS A REDUCED SIZE DRAWING

STM	DESCRIPTION	DATE	APPR
1	MOD P00005	05/2023	
2	MOD P00006 AND MOD P00007	10/2025	
3	BY AMENDMENT	1/16/2026	

NAVFAC

NICHOLAS G. ZUBRICK, LICENSE No. 64299, STATE OF FLORIDA, PROFESSIONAL ENGINEER, 01/16/2026

BAMFORTH ENGINEERS & ARCHITECTS

AE INFO

APPROVED
FOR COMMANDER NAVFAC
ACTIVITY: Approved by J. Scott Roberts, Asset Management Branch Head & Supervisory Facility Planner, PWD Beaufort, SC via email.
SATISFACTORY TO DATE 12/15/2022

DES	RLW	DRW RLW	CHK KLM
PM/DM	KTB / RLH		
BRANCH MANAGER	JAS		
CHIEF ENG/ARCH	EJA		
FP ENGINEER	DSN		

NAVAL FACILITIES ENGINEERING SYSTEMS COMMAND ~ MID-ATLANTIC
NORFOLK, VA

DEPARTMENT OF THE NAVY
NAVAL FACILITIES ENGINEERING SYSTEMS COMMAND ~ MID-ATLANTIC
DC CORE:
MCAS BEAUFORT

BEAUFORT, SC
P-475 AIRCRAFT MAINTENANCE HANGAR - VOLUME 3 (OSF OPTION)
ELECTRICAL LEGEND AND ABBREVIATIONS - VOLUME 3

SCALE: As indicated
EPROJECT NO.: 13363603
CONSTR. CONTR. NO.
NAVFAC DRAWING NO. 12860234
SHEET 1033 OF 1412
OEG001

DRAWFORM REVISION: 25 AUGUST 2020

Autodesk Docs://2042 NAF A1 320 FB Maintenance Hangar/2042-735 -nasrd Hangar_OSF Hog Annex BL/R/T2024.rvt
1/14/2026 3:54:59 PM

NOTES:

SHEET NOTES:

A. EXTERIOR LIGHTING FIXTURES WILL BE CONTROLLED VIA LIGHTING RELAY PANEL "OLRP1" LOCATED IN ELECTRICAL ROOM O108.
B. PROVIDE AN UNSWITCHED PHASE CONDUCTOR TO ALL EMERGENCY BATTERY BACK-UP LIGHTING FIXTURES AND EXIT SIGNS.
C. REFER TO SHEET OEG002 FOR LIGHTING FIXTURE SYMBOLS LEGEND. REFER TO SHEETS OEL701 FOR LIGHTING FIXTURE SCHEDULE.
D. ALL INTERIOR LIGHTS IN ROOM O102 WILL BE CONNECTED TO EITHER SWITCH LEG 'A', SWITCH LEG 'B' OR SWITCH LEG 'C' AS INDICATED. ALL ASSOCIATED LIGHTING RELAYS IN ROOM O102 WILL BE NETWORKED TOGETHER AND PROGRAMMED SO THEY RESPOND TO ALL THE DIGITAL SWITCHES , DAYLIGHTING SENSORS AND OCCUPANCY SENSORS WITHIN ROOM O102 AS REQUIRED.
E. PROVIDE A MEANS TO OVERRIDE ALL AUTOMATIC MEANS OF LIGHTING CONTROLS IN ROOM O102 UPON ACTIVATION OF THE FIRE ALARM SYSTEM. ALL INTERIOR LIGHT FIXTURES WITHIN ROOM O102 WILL TURN ON AT FULL OUTPUT UPON ACTIVATION OF THE FIRE ALARM SYSTEM.
F. SEE A3/OEL601 FOR LIGHT FIXTURE MOUNTING DETAIL FOR ROOM O102.

KEY NOTES (00)

1 MOUNT FIXTURE AT 10'-0" ABOVE FINISHED FLOOR TO BOTTOM.
2 COORDINATE EXACT LIGHTING FIXTURE LOCATION WITH TELECOMMUNICATIONS EQUIPMENT RACKS AND LADDER TRAY LOCATIONS. ENSURE LIGHTING FIXTURES ILLUMINATE THE FRONT AND REAR OF THE EQUIPMENT RACKS AND ARE MOUNTED BELOW THE LADDER TRAY.
3 SEE SHEET OEL101A FOR CONTINUATION.
4 MOUNT PHOTOCELL ON EXTERIOR WALL AT 13'-6" AFF TO TOP OF DEVICE. ORIENT TO FACE NORTH. SENSOR SHALL BE LISTED FOR EXTERIOR USE AND SUITABLE FOR CORROSIVE ENVIRONMENTS.

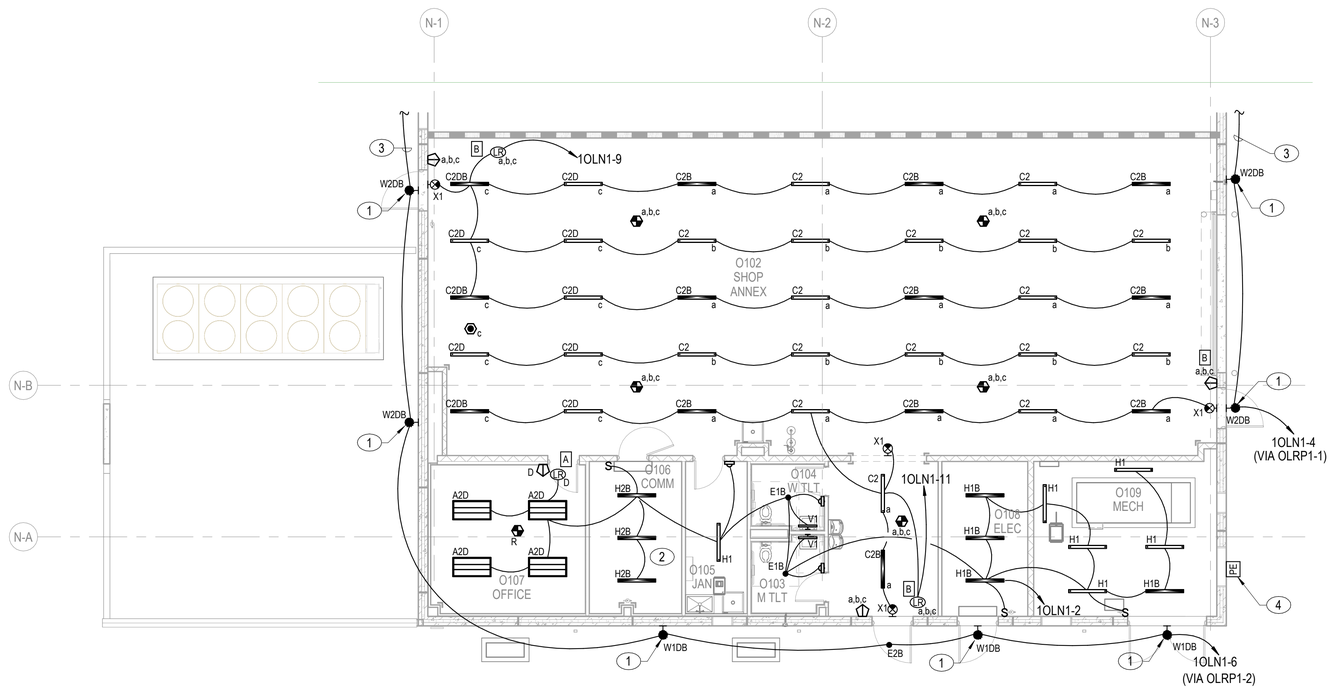

A1 LIGHTING PLAN, GROUND FLOOR - SECTOR B
1/8" = 1'-0"

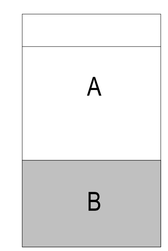

KEYPLAN

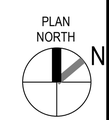

0 5' 10' 20' 30'
1/8" = 1'-0" GRAPHIC SCALE

NOTE:
IF THIS DRAWING IS LESS THAN 34" X 22"
IT IS A REDUCED SIZE DRAWING

STM	DESCRIPTION	DATE	APPR
1	MOD P00005	05/2023	
2	MOD P00006 AND MOD P00007	10/2025	
3	BY AMENDMENT	1/16/2026	

NAVFAC

NICHOLAS G. ZUBRICKY, LICENSE No. 64299, STATE OF FLORIDA, PROFESSIONAL ENGINEER
01/16/2026

SEAL

BAMFORTH ENGINEERS CONTRACTORS

A/E INFO

APPROVED
Jason E. Jones, P.E.
FOR COMMANDER NAVFAC

ACTIVITY
Approved by J. Scott Roberts,
Asset Management Branch Head &
Supervisory Facility Planner, PWD
Beaufort, SC via email.

SATISFACTORY TO DATE	12/15/2022
DES RLW / DRW RLW / CHK KLM	
PM/DM	KTB / RLH
BRANCH MANAGER	JAS
CHIEF ENG/ARCH	EJA
FP ENGINEER	DSN

DEPARTMENT OF THE NAVY
NAVAL FACILITIES ENGINEERING SYSTEMS COMMAND
DC CORE
MCAS BEAUFORT

NAVAL FACILITIES ENGINEERING SYSTEMS COMMAND – MID-ATLANTIC
NORFOLK, VA

BEAUFORT, SC

P-475 AIRCRAFT MAINTENANCE HANGAR - VOLUME 3 (OSF OPTION)

OSF / SHOP ANNEX - LIGHTING PLAN - GROUND FLOOR - SECTOR B

SCALE:	1/8" = 1'-0"
EPROJECT NO.:	1363603
CONSTR. CONTR. NO.	
NAVFAC DRAWING NO.	12860237
SHEET	1036 OF 1412

OEL101B

DRAWFORM REVISION: 28 AUGUST 2020

Autodesk Docs://00243_NMFAT 501 F35 Maintenance Hangar/00243 F35 maint Hangar_OSF Ancp Annex EL-R17/2024-r4
1/16/2026 3:54:45 PM

LUMINAIRE REQUIREMENTS:

1. HOUSING - DIE-FORMED, COLD ROLLED STEEL, WITH ONE-PIECE LOWER REFLECTOR HAVING TEXTURED, HIGH REFLECTANCE, BAKED MATTE WHITE ENAMEL FINISH. OPTIONAL SIZES OF 2FT x 2FT AND 2FT x 4FT AVAILABLE.
2. LIGHT SOURCE - UPWARD-FACING LEDS WITH DIFFUSE LENS TO ELIMINATE DIRECT VIEW OF LIGHT SOURCE. 4000K COLOR TEMPERATURE UON, MAXIMUM BINNING TOLERANCE OF A 4-STEP MCADAM ELLIPSE, MINIMUM EFFICACY OF 90 LUMENS/WATT, WITH A MINIMUM CRI OF 80. INITIAL LUMEN OUTPUT AS INDICATED IN LUMINAIRE SCHEDULE.
4. DRIVER - REPLACEABLE, INTEGRAL, HIGH-EFFICIENCY DRIVER WITH MINIMUM 0.9 PF, OPERATING VOLTAGE OF 120-277V, THERMAL MANAGEMENT, < 20% TOTAL HARMONIC DISTORTION. STEP-DIMMABLE OR FULLY DIMMABLE AS INDICATED IN LUMINAIRE SCHEDULE.
5. CERTIFICATION - UL 1598, DAMP LOCATION, DLC QUALIFIED, AND ROHS COMPLIANT. COMPLIES WITH LM79, LM80 AND TM21 TESTING STANDARDS. UL 924 WHEN EQUIPPED WITH EMERGENCY BATTERY BACK-UP. IC RATED WHEN INDICATED.
6. MOUNTING - RECESSED IN SUSPENDED ACOUSTICAL TILE OR HARD CEILING.
7. THIS SKETCH IS A NON-PROPRIETARY GRAPHIC REPRESENTATION OF A LUMINAIRE THAT MAY MEET THE SPECIFICATION REQUIREMENTS. IT IS NOT INTENDED TO INDICATE A CERTAIN MANUFACTURER OR PREFERENCE.

VOLUMETRIC LED TROFFER

C1 FIXTURE TYPE A2D
NOT TO SCALE

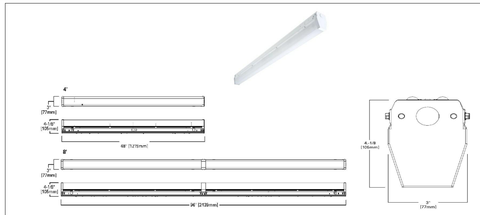

LUMINAIRE REQUIREMENTS:

1. HOUSING - DIE-FORMED, COLD-ROLLED STEEL, WITH REINFORCEMENT RIBS FOR RIGIDITY AND SPECULAR ALUMINUM OR HIGHLY-REFLECTIVE PAINTED STEEL REFLECTORS. 4FT LENGTH.
2. FINISH - MULTI-STAGE PHOSPHATE BONDING TREATMENT FINISHED WITH HIGH-REFLECTANCE, WHITE POLYESTER POWDER COAT, PAINTED AFTER FABRICATION.
3. LIGHT SOURCE - SOLID STATE LEDS WITH MINIMUM 50K HOURS RATED LIFE AT L70, 4000K CCT UON, MINIMUM 80 CRI, MAXIMUM 4-STEP MCADAM ELLIPSE BINNING TOLERANCE FOR COLOR CONSISTENCY, AND MINIMUM EFFICACY OF 100 LUMENS/WATT. INITIAL LUMEN OUTPUT AS INDICATED IN LUMINAIRE SCHEDULE.
4. DRIVER - REPLACEABLE, INTEGRAL, HIGH-EFFICIENCY DRIVER WITH MINIMUM 0.9 PF, OPERATING VOLTAGE OF 120-277V, THERMAL MANAGEMENT, < 20% TOTAL HARMONIC DISTORTION. ON-OFF CONTROL, STEP-DIMMABLE OR FULLY DIMMABLE AS INDICATED.
5. CERTIFICATION - UL 1598, DAMP LOCATION, DLC QUALIFIED, AND ROHS COMPLIANT. COMPLIES WITH LM79, LM80 AND TM21 TESTING STANDARDS. UL 924 WHEN EQUIPPED WITH EMERGENCY BATTERY BACK-UP.
6. MOUNTING - SURFACE ON CEILING OR SUSPENDED.
7. STEM HANGERS.
8. THIS SKETCH IS A NON-PROPRIETARY GRAPHIC REPRESENTATION OF A LUMINAIRE THAT MAY MEET THE SPECIFICATION REQUIREMENTS. IT IS NOT INTENDED TO INDICATE A CERTAIN MANUFACTURER OR PREFERENCE.

LED ARCHITECTURAL STRIP

C2 FIXTURE TYPES C2, C2B, C2D, C2DB
NOT TO SCALE

LUMINAIRE REQUIREMENTS:

1. HOUSING - DIE-FORMED, COLD-ROLLED STEEL, WITH REINFORCEMENT RIBS FOR RIGIDITY AND SPECULAR ALUMINUM OR HIGHLY-REFLECTIVE PAINTED STEEL REFLECTORS. 4FT LENGTH.
2. FINISH - MULTI-STAGE PHOSPHATE BONDING TREATMENT FINISHED WITH HIGH-REFLECTANCE, WHITE POLYESTER POWDER COAT, PAINTED AFTER FABRICATION.
3. LIGHT SOURCE - SOLID STATE LEDS WITH MINIMUM 50K HOURS RATED LIFE AT L70, 4000K CCT UON, MINIMUM 80 CRI, MAXIMUM 4-STEP MCADAM ELLIPSE BINNING TOLERANCE FOR COLOR CONSISTENCY, AND MINIMUM EFFICACY OF 100 LUMENS/WATT. INITIAL LUMEN OUTPUT AS INDICATED IN LUMINAIRE SCHEDULE.
4. DRIVER - REPLACEABLE, INTEGRAL, HIGH-EFFICIENCY DRIVER WITH MINIMUM 0.9 PF, OPERATING VOLTAGE OF 120-277V, THERMAL MANAGEMENT, < 20% TOTAL HARMONIC DISTORTION. ON-OFF CONTROL, STEP-DIMMABLE OR FULLY DIMMABLE AS INDICATED.
5. CERTIFICATION - UL 1598, DAMP LOCATION, DLC QUALIFIED, AND ROHS COMPLIANT. COMPLIES WITH LM79, LM80 AND TM21 TESTING STANDARDS. UL 924 WHEN EQUIPPED WITH EMERGENCY BATTERY BACK-UP.
6. MOUNTING - SURFACE ON CEILING OR SUSPENDED.
7. THIS SKETCH IS A NON-PROPRIETARY GRAPHIC REPRESENTATION OF A LUMINAIRE THAT MAY MEET THE SPECIFICATION REQUIREMENTS. IT IS NOT INTENDED TO INDICATE A CERTAIN MANUFACTURER OR PREFERENCE.

LED INDUSTRIAL STRIP

C3 FIXTURE TYPES H1, H1B, H2B
NOT TO SCALE

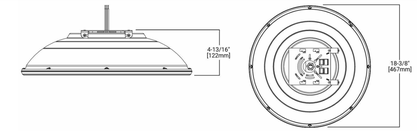

LUMINAIRE REQUIREMENTS:

1. HOUSING - DIE-CAST ALUMINUM WITH INTEGRAL, SELF-CLEANING HEAT SINK FINS, RIBS, OR EQUIVALENT PASSIVE COOLING MECHANISM. HEAT SINK SHALL BE INCORPORATED DIRECTLY INTO HOUSING TO ENSURE MAXIMUM HEAT TRANSFER AND DISSIPATION.
   3 ALL FASTERNERS SHALL BE ALUMINUM OR STAINLESS STEEL.
2. FINISH - MULTI-STAGE PRE-TREATMENT, FINISHED IN SILVER BAKED-ON POLYESTER POWDER COAT. FINISH SHALL PASS 2500 HOUR SALT SPRAY TEST PER ASTM B117.
3. POWER SUPPLY/LED DRIVER - CLASS 1 DRIVER SHALL OPERATE AT 120/277V, 50/60 HZ; OTHER VOLTAGES OPTIONAL. POWER FACTOR GREATER THAN 0.9 AND THD LESS THAN 20% AT FULL LOAD. MINIMUM EFFICACY SHALL BE 70 LM/W AT MAXIMUM 600 mA OPERATING CURRENT.
4. LED OPTICAL ASSEMBLY - NUMBER OF LED ARRAYS SHALL VARY TO ACCOMMODATE DESIRED LUMINAIRE OUTPUT. PROVIDE WITH EQUIVALENT NEMA DISTRIBUTION TYPE AS INDICATED ON FIXTURE SCHEDULE. BUG UPLIGHT RATING OF U0, WITH BACKLIGHT AND GLARE RATINGS AS DETERMINED BY LIGHTING ZONE INSTALLED. MINIMUM COLOR RENDERING INDEX (CRI) SHALL BE 70 FOR CORRELATED COLOR TEMPERATURE (CCT) OF 4000-4500 DEGREES K.
5. SURGE PROTECTION - 6 kV MINIMUM, COMPLIANT WITH ANSI C62.41.2.
6. CERTIFICATION - UL AND/OR ETL LISTED, MINIMUM IP65 RATED PER ANSI/IEC 60529, AND RoHS COMPLIANT.
7. OTHER - THE ABOVE SKETCH IS A NON-PROPRIETY GRAPHIC REPRESENTATION OF A LUMINAIRE THAT MAY MEET THE SPECIFICATION REQUIREMENTS AND IS NOT INTENDED TO INDICATE A CERTAIN MANUFACTURER'S PREFERENCE. ALL DIMENSIONS ARE NOMINAL AND VARY PER MANUFACTURER.

LED CANOPY LUMINAIRE

C4 FIXTURE TYPES G1D, G1DB
NOT TO SCALE

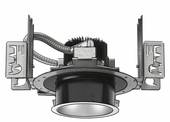

LUMINAIRE REQUIREMENTS:

1. HOUSING - DIE-FORMED, COLD ROLLED STEEL, OR FORGED ALUMINUM WITH HEAT SINK. DRIVER MUST BE ACCESSIBLE FROM BOTTOM OF LUMINAIRE. PROVIDE T-BAR HANGERS FOR INSTALLATION IN ACOUSTICAL TILE CEILINGS OR TABS WHEN MOUNTING IN HARD CEILINGS.
2. REFLECTOR AND TRIM - SPECIFICATION GRADE, LOW IRIDESCENT, SPECULAR ALUMINUM REFLECTOR WITH POLISHED SELF FLANGE.
3. LIGHT SOURCE - SOLID STATE LEDS WITH MINIMUM 50K HOURS RATED LIFE AT L70, 4000K CCT UON, MINIMUM 80 CRI, MAXIMUM 4-STEP MCADAM ELLIPSE BINNING TOLERANCE FOR COLOR CONSISTENCY, AND MINIMUM EFFICACY OF 90 LUMENS/WATT. INITIAL LUMEN OUTPUT AS INDICATED IN LUMINAIRE SCHEDULE.
4. DRIVER - REPLACEABLE, INTEGRAL, HIGH-EFFICIENCY DRIVER WITH MINIMUM 0.9 PF, OPERATING VOLTAGE OF 120-277V, THERMAL MANAGEMENT, < 20% TOTAL HARMONIC DISTORTION. ON-OFF CONTROL, STEP-DIMMABLE OR FULLY DIMMABLE AS INDICATED.
5. CERTIFICATION - UL 1598, DAMP LOCATION, DLC QUALIFIED, AND ROHS COMPLIANT. COMPLIES WITH LM79, LM80 AND TM21 TESTING STANDARDS. UL 924 WHEN EQUIPPED WITH EMERGENCY BATTERY BACK-UP.
6. MOUNTING - RECESSED IN HARD OR ACOUSTICAL TILE CEILING.
7. THIS SKETCH IS A NON-PROPRIETARY GRAPHIC REPRESENTATION OF A LUMINAIRE THAT MAY MEET THE SPECIFICATION REQUIREMENTS. IT IS NOT INTENDED TO INDICATE A CERTAIN MANUFACTURER OR PREFERENCE.

LED RECESSED DOWNLIGHT

A1 FIXTURE TYPES E1B, E2B
NOT TO SCALE

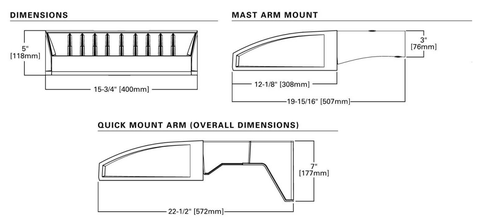

LUMINAIRE REQUIREMENTS:

1. HOUSING - DIE-CAST ALUMINUM WITH INTEGRAL PASSIVE COOLING MECHANISM. HEAT SINK SHALL BE INCORPORATED DIRECTLY INTO HOUSING OR DRIVER COMPARTMENT TO ENSURE MAXIMUM HEAT TRANSFER AND DISSIPATION.
   3 ALL FASTENERS SHALL BE ALUMINUM OR STAINLESS STEEL.
2. FINISH - MULTI-STAGE PRE-TREATMENT, FINISHED WITH BAKED-ON POLYESTER POWDER COAT. FINISH SHALL PASS 2500 HOUR SALT SPRAY TEST PER ASTM B117. DARK BRONZE FINISH.
3. POWER SUPPLY/LED DRIVER - CLASS 1 DRIVER SHALL OPERATE AT 120/277 VOLTS, 50/60 HZ; POWER FACTOR GREATER THAN 0.9 AND THD LESS THAN 20% AT FULL LOAD. MINIMUM EFFICACY SHALL BE 60 LM/W AT MAXIMUM 600mA OPERATING CURRENT.
4. LED OPTICAL ASSEMBLY - PRECISION MOLDED ACRYLIC LENS PROVIDED FOR MULTIPLE HIGH-POWERED LEDS PRODUCING NEMA DISTRIBUTION TYPE AS NOTED ON FIXTURE SCHEDULE. BUG UPLIGHT RATING OF U0, WITH GLARE RATING AS DETERMINED BY LIGHTING ZONE INSTALLED.
5. CERTIFICATION - UL AND/OR ETL LISTED FOR DAMP OR WET LOCATIONS, AND RoHS COMPLIANT.
6. OTHER - THE ABOVE SKETCH IS A NON-PROPRIETY GRAPHIC REPRESENTATION OF A LUMINAIRE THAT MAY MEET THE SPECIFICATION REQUIREMENTS AND IS NOT INTENDED TO INDICATE A CERTAIN MANUFACTURER'S PREFERENCE. ALL DIMENSIONS ARE NOMINAL AND VARY PER MANUFACTURER.

LED WALL PACK

A2 FIXTURE TYPES W1DB, W2DB
NOT TO SCALE

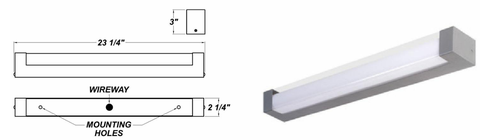

LUMINAIRE REQUIREMENTS:

1. HOUSING - BRUSHED NICKEL WITH OPAL MATT ACRYLIC LENS.
2. LIGHT SOURCE - LEDS MOUNTED BEHIND MATT ACRYLIC LENS. INITIAL LUMEN OUTPUT AS INDICATED IN LUMINAIRE SCHEDULE.
3. DRIVER - REPLACEABLE, INTEGRAL, HIGH-EFFICIENCY DRIVER WITH MINIMUM 0.9 PF, OPERATING VOLTAGE OF 120-277V, THERMAL MANAGEMENT, < 20% TOTAL HARMONIC DISTORTION.
4. CERTIFICATION - UL 1598, SHALL COMPLY WITH LM79, LM80 AND TM21 TESTING STANDARDS.
5. MOUNTING - SURFACE MOUNT TO WALL.
6. THIS SKETCH IS A NON-PROPRIETARY GRAPHIC REPRESENTATION OF A LUMINAIRE THAT MAY MEET THE SPECIFICATION REQUIREMENTS. IT IS NOT INTENDED TO INDICATE A CERTAIN MANUFACTURER OR PREFERENCE.

LED VANITY FIXTURE

A3 FIXTURE TYPE V1
NOT TO SCALE

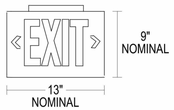

LUMINAIRE REQUIREMENTS:

1. HOUSING - HIGH-IMPACT, UV-STABILIZED, INJECTION-MOLDED THERMOPLASTIC. SINGLE OR DOUBLE-FACED AS INDICATED.
2. LETTERS/CHEVRONS - MINIMUM 6" HIGH WITH 3/4" STROKE. GREEN LETTERS AS INDICATED. PROVIDE CHEVRONS AS INDICATED EITHER LEFT, RIGHT OR BOTH DIRECTIONS AS INDICATED. CHEVRONS PUNCHED OUT THROUGH HOUSING AS REQUIRED.
3. EMERGENCY PACK - SOLID-STATE, CONSTANT-CURRENT TYPE BATTERY CHARGER WITH MAINTENANCE-FREE, NICKEL-CADMIUM BATTERY, AC-ON INDICATOR LAMP AND TEST SWITCH.
4. MOUNTING - UNIVERSAL MOUNTING KIT FOR CEILING, WALL OR END-OF-FIXTURE MOUNTING.
5. ILLUMINATION - PROVIDED GREEN HIGH-OUTPUT LEDS INSIDE OF FIXTURE HOUSING. PROVIDE POLYSTYRENE DIFFUSER IN COLOR INDICATED WITH FREQUENCY-MATCHED SILKSCREEN COATING FOR MAXIMUM LED LIGHT OUTPUT.
6. CERTIFICATION - UL LISTED AND CERTIFIED FOR DAMP LOCATIONS.

LED EXIT SIGN

A4 FIXTURE TYPE X1
NOT TO SCALE

NOTE:
IF THIS DRAWING IS LESS THAN 34" X 22"
IT IS A REDUCED SIZE DRAWING

STM	DESCRIPTION	DATE	APPR
1	MOD P00005	05/2023	
2	MOD P00006 AND MOD P00007	10/2025	
3	BY AMENDMENT	1/16/2026	

NAVFAC

NICHOLAS G. ZUBRICKI
LICENSE
No. 64299
STATE OF FLORIDA
PROFESSIONAL ENGINEER
01/16/2026
SEAL

BAMFORTH
ENGINEERS - CONTRACTORS
A/E INFO

APPROVED
FOR COMMANDER NAVFAC

ACTIVITY
Approved by J. Scott Roberts,
Asset Management Branch Head &
Supervisory Facility Planner, PWD
Beaufort, SC via email.

SATISFACTORY TO DATE	12/15/2022
DES RLW / DRW RLW / CHK KLM	
PMDM	KTB / RLH
BRANCH MANAGER	JAS
CHIEF ENG/ARCH	EJA
FP ENGINEER	DSN

DEPARTMENT OF THE NAVY
NAVAL FACILITIES ENGINEERING SYSTEMS COMMAND
DC CORE:
MCAS BEAUFORT

NAVAL FACILITIES ENGINEERING SYSTEMS COMMAND ~ MID-ATLANTIC
NORFOLK, VA

BEAUFORT, SC

P-475 AIRCRAFT MAINTENANCE HANGAR - VOLUME 3 (OSF OPTION)

LIGHTING FIXTURE DETAILS

SCALE: NTS
EPROJECT NO.: 1363603
CONSTR. CONTR. NO.
NAVFAC DRAWING NO. 12860238
SHEET 1037 OF 1412

OEL501

DRAWFORM REVISION: 25 AUGUST 2020

Autodesk Docs://2042 MFA1 302 FS Maintenance Hangar/2042-175 maint Hangar_OSF Hrsp Annex BL.RVT/2024.rvt
1/14/2026 3:55:15 PM

LIGHTING FIXTURES SCHEDULE

FIXTURE TYPE	Apparent Load	FIXTURE DESCRIPTION	VOLTAGE	LAMP	LUMEN	CCT	CRI	MOUNTING	NOTES	Include In Interior Ashrae 90.1	Circuit Load	Type Mark	DETAIL REFERENCE
A2D	29 VA	2' X 4' VOLUMETRIC LED TROFFER WITH COLD ROLLED STEEL HOUSING, SMOOTH FROSTED ACRYLIC LENS, AND MATTE WHITE ENAMEL FINISH. PROVIDE DIMMING DRIVER.	120V	LED	4142	4000K	80	RECESSED		Yes	29 VA		C1/OEL501
C2	56 VA	4'L LOW BAY LED STRIP FIXTURE WITH COLD ROLLED STEEL HOUSING, WIDE SYMMETRIC OPTICAL DISTRIBUTION, MATTE WHITE ENAMEL FINISH, AND FROSTED ACRYLIC LENS.	120V	LED	8802	4000K	80	SUSPENDED	SUSPEND AT 12'-2" AFF TO BOTTOM UON. FIXTURE SHALL BE UL LISTED AS A RACEWAY SUITABLE FOR THROUGH WIRING.		52 VA		C2/OEL501
C2B	56 VA	4'L LOW BAY LED STRIP FIXTURE WITH COLD ROLLED STEEL HOUSING, WIDE SYMMETRIC OPTICAL DISTRIBUTION, MATTE WHITE ENAMEL FINISH, AND FROSTED ACRYLIC LENS. PROVIDE WITH EMERGENCY BATTERY.	120V	LED	8802	4000K	80	SUSPENDED	SUSPEND AT 12'-2" AFF TO BOTTOM UON. FIXTURE SHALL BE UL LISTED AS A RACEWAY SUITABLE FOR THROUGH WIRING. PROVIDE INTEGRAL BATTERY WITH 90 MINUTE RUN TIME. SEE SPECIFICATION 26 51 00 FOR MINIMUM EMERGENCY DRIVER POWER REQUIREMENTS		56 VA		C2/OEL501
C2D	56 VA	4'L LOW BAY LED STRIP FIXTURE WITH COLD ROLLED STEEL HOUSING, WIDE SYMMETRIC OPTICAL DISTRIBUTION, MATTE WHITE ENAMEL FINISH, AND FROSTED ACRYLIC LENS. PROVIDE WITH DIMMING DRIVER	120V	LED	8802	4000K	80	SUSPENDED	SUSPEND AT 12'-2" AFF TO BOTTOM UON. FIXTURE SHALL BE UL LISTED AS A RACEWAY SUITABLE FOR THROUGH WIRING.		56 VA		C2/OEL501
C2DB	56 VA	4'L LOW BAY LED STRIP FIXTURE WITH COLD ROLLED STEEL HOUSING, WIDE SYMMETRIC OPTICAL DISTRIBUTION, MATTE WHITE ENAMEL FINISH, AND FROSTED ACRYLIC LENS. PROVIDE WITH EMERGENCY BATTERY AND DIMMING DRIVER.	120V	LED	8802	4000K	80	SUSPENDED	SUSPEND AT 12'-2" AFF TO BOTTOM UON. FIXTURE SHALL BE UL LISTED AS A RACEWAY SUITABLE FOR THROUGH WIRING. PROVIDE INTEGRAL BATTERY WITH 90 MINUTE RUN TIME. SEE SPECIFICATION 26 51 00 FOR MINIMUM EMERGENCY DRIVER POWER REQUIREMENTS		56 VA		C2/OEL501
E1B	25 VA	4" DIAMETER RECESSED LED DOWNLIGHT WITH GALVANIZED STEEL HOUSING, INTEGRAL JUNCTION BOX, REGRESSED CLEAR TEMPERED LENS, DIFFUSE HAZE REFLECTOR, POLISHED SELF FLANGE, 62 DEGREE BEAM, AND MATTE WHITE FINISH. PROVIDE WITH EMERGENCY BATTERY.	120V	LED	1000	4000K	80	RECESSED		Yes	25 VA		A1/OEL501
E2B	25 VA	6" DIAMETER X 4.2" DEEP RECESSED LED DOWNLIGHT WITH GALVANIZED STEEL HOUSING, INTEGRAL JUNCTION BOX, SEMI-SPECULAR REFLECTOR, 55 DEGREE BEAM. PROVIDE WITH EMERGENCY BATTERY.	120V	LED	1000	4000K	80	RECESSED	UL WET LISTED.	Yes	25 VA		A1/OEL501
G1D	28 VA	18" DIAMETER X 4-13/16" DEEP PENDANT PARKING GARAGE FIXTURE WITH DIE-CAST ALUMINUM HOUSING, CONCENTRATED OPTICAL DISTRIBUTION, 2.5MIL SILVER POWDER COAT FINISH, STANDARD 0-10V DIMMING, AND IP66 RATING.	120V	LED	4000	4000K	70	SUSPENDED	MOUNT AT 9' 0" AFF TO BOTTOM UON.				C4/OEL501
G1DB	28 VA	18" DIAMETER X 4-13/16" DEEP PENDANT PARKING GARAGE FIXTURE WITH DIE-CAST ALUMINUM HOUSING, CONCENTRATED OPTICAL DISTRIBUTION, 2.5MIL SILVER POWDER COAT FINISH, STANDARD 0-10V DIMMING, AND IP66 RATING. PROVIDE WITH EMERGENCY BATTERY.	120V	LED	4000	4000K	70	SUSPENDED	MOUNT AT 9' 0" AFF TO BOTTOM UON. PROVIDE INTEGRAL BATTERY WITH 90 MINUTE RUN TIME.				C4/OEL501
H1	40 VA	4' LENSED LED STRIP FIXTURE, 22-GAUGE DIE-FORMED STEEL WITH WHITE POLYESTER POWDER COAT FINISH, 0.125" THICK FROSTED ACRYLIC LENS.	120V	LED	3138	4000K	80	SUSPENDED	SUSPEND AT 9'-0" AFF TO BOTTOM UON. FIXTURE SHALL BE UL LISTED AS A RACEWAY SUITABLE FOR THROUGH WIRING.		40 VA		C3/OEL501
H1B	40 VA	4' LENSED LED STRIP FIXTURE, 22-GAUGE DIE-FORMED STEEL WITH WHITE POLYESTER POWDER COAT FINISH, 0.125" THICK FROSTED ACRYLIC LENS. PROVIDE WITH EMERGENCY BATTERY.	120V	LED	3138	4000K	80	SUSPENDED	SUSPEND AT 9'-0" AFF TO BOTTOM UON. FIXTURE SHALL BE UL LISTED AS A RACEWAY SUITABLE FOR THROUGH WIRING. PROVIDE INTEGRAL BATTERY WITH 90 MINUTE RUN TIME.		40 VA		C3/OEL501
H2B	40 VA	4' LENSED LED STRIP FIXTURE, 22-GAUGE DIE-FORMED STEEL WITH WHITE POLYESTER POWDER COAT FINISH, 0.125" THICK FROSTED ACRYLIC LENS. PROVIDE WITH EMERGENCY BATTERY.	120V	LED	5858	4000K	80	SUSPENDED	SUSPEND AT 9'-0" AFF TO BOTTOM UON. FIXTURE SHALL BE UL LISTED AS A RACEWAY SUITABLE FOR THROUGH WIRING. PROVIDE INTEGRAL BATTERY WITH 90 MINUTE RUN TIME.		40 VA		C3/OEL501
V1	12 VA	23" LED VANITY FIXTURE WITH MATTE SILVER POWDER COAT FINISH, MATTE WHITE ACRYLIC INNER DIFFUSER, OPAL MATTE ACRYLIC OUTER DIFFUSED LENS.	120V	LED	1400	4000K	86	WALL	MOUNT AT 1" ABOVE TOP OF MIRROR FRAME TO BOTTOM.		12 VA		A3/OEL501
W1DB	113 VA	EXTERIOR WALL MOUNTED FIXTURE WITH DIE CAST ALUMINUM ENCLOSURE, IP66 RATED HOUSING, 2.5MIL THICKNESS DARK BRONZE POWDER COAT FINISH, AND TYPE IV FORWARD THROW DISTRIBUTION. PROVIDE WITH INTEGRAL DIMMING OCCUPANCY SENSOR AND EMERGENCY BATTERY. INTEGRAL CONTROLS SHALL BE PROGRAMMED SUCH THAT LIGHT OUTPUT IS AT 70% FULL BRIGHTNESS FROM DUSK TO DAWN, UNLESS MOTION IS DETEDCTED, WHICH SHALL TRIGGER THE FIXTURE TO SWITCH TO 100% FULL BRIGHTNESS WITH A 10 MINUTE VACANCY TIMEOUT.	120V	LED	6542	4000K	80	WALL	MOUNTED AT 15'-0" AFG TO BOTTOM UON.	Yes	113 VA		A2/OEL501
W2DB	113 VA	EXTERIOR WALL MOUNTED FIXTURE WITH DIE CAST ALUMINUM ENCLOSURE, IP66 RATED HOUSING, 2.5MIL THICKNESS DARK BRONZE POWDER COAT FINISH, AND TYPE IV WIDE DISTRIBUTION. PROVIDE WITH INTEGRAL DIMMING OCCUPANCY SENSOR AND EMERGENCY BATTERY. INTEGRAL CONTROLS SHALL BE PROGRAMMED SUCH THAT LIGHT OUTPUT IS AT 70% FULL BRIGHTNESS FROM DUSK TO DAWN, UNLESS MOTION IS DETEDCTED, WHICH SHALL TRIGGER THE FIXTURE TO SWITCH TO 100% FULL BRIGHTNESS WITH A 10 MINUTE VACANCY TIMEOUT.	120V	LED	6458	4000K	80	WALL	MOUNTED AT 15'-0" AFG TO BOTTOM UON.	Yes	113 VA		A2/OEL501
X1	2 VA	SINGLE FACE LED EXIT SIGN WITH ALUMINUM HOUSING, INTEGRAL NICKEL CADMIUM BATTERY AND GREEN LETTERS.	120V	LED	N/A	N/A	N/A	UNIVERSAL	WHERE WALL-MOUNTED ABOVE DOOR, MOUNT AT 1" ABOVE DOOR FRAME TO BOTTOM OF SIGN.	No	2 VA		A4/OEL501

NOTES:

SHEET NOTES:

A. LED DRIVER ASSEMBLIES SERVING RECESSED DOWN LIGHTS SHALL BE REMOVABLE AND SERVICEABLE FROM THE FIXTURE APERTURE. PROVIDE LEAD LENGTHS THAT ARE ADEQUATE FOR "DROPPING" THE DRIVER ASSEMBLY BELOW THE FIXTURE APERTURE.
B. ALL LED 2'X4' FIXTURES SHALL BE INHERENTLY DIMMABLE WITH A CCT OF 4000K AND A CRI OF 80 UNLESS OTHERWISE NOTED.
C. ALL LED DOWNLIGHT FIXTURES SHALL BE INHERENTLY DIMMABLE WITH A CCT OF 4000K AND A CRI OF 80 UNLESS OTHERWISE NOTED.
D. LIGHTING FIXTURES SHALL NOT BE USED AS A RACEWAY UNLESS UL LISTED AS SUCH.
E. COORDINATE RECESSED LIGHTING FIXTURES WITH THE CEILING MATERIAL IN WHICH THEY ARE INSTALLED AND PROVIDE SUITABLE MOUNTING TRIM.
F. DIMMING DRIVERS SHALL BE COMPATIBLE WITH ASSOCIATED LIGHTING CONTROL SWITCH OR RELAY AND SHALL ALLOW FOR 10% TO 100% DIMMING RANGE OR STEP DIMMING AS REQUIRED.
G. EMERGENCY DESIGNATED EGRESS FIXTURES INDICATED ON CONTRACT DRAWINGS AND CONNECTED TO BRANCH CIRCUITS WITH GENERATOR BACK-UP SOURCE SHALL NOT BE PROVIDED WITH INTEGRAL BATTERY BACK-UP.

NOTE:
IF THIS DRAWING IS LESS THAN 34" X 22"
IT IS A REDUCED SIZE DRAWING

STM	DESCRIPTION	DATE	APPR
1	MOD P00005	05/2023	
2	MOD P00006 AND MOD P00007	10/2025	
3	BY AMENDMENT	1/16/2026	

NAVFAC

NICHOLAS G. ZUBRICKI, LICENSE No. 64299, STATE OF FLORIDA, PROFESSIONAL ENGINEER, 01/16/2026

BAMFORTH ENGINEERS & CONTRACTORS

A/E INFO

APPROVED
Director of Contracts, P.E.
FOR COMMANDER NAVFAC

ACTIVITY
Approved by J. Scott Roberts.
Asset Management Branch Head &
Supervisory Facility Planner, PWD
Beaufort, SC via email.

SATISFACTORY TO DATE 12/15/2022

DES RLW	DRW RLW	CHK KLM	
PM/DM	KTB / RLH		
BRANCH MANAGER	JAS		
CHIEF ENG/ARCH	EJA		
FP ENGINEER	DSN		

DEPARTMENT OF THE NAVY
NAVAL FACILITIES ENGINEERING SYSTEMS COMMAND
DC:CORE

NAVAL FACILITIES ENGINEERING SYSTEMS COMMAND ~ MID-ATLANTIC
NORFOLK, VA

MCAS BEAUFORT
BEAUFORT, SC

P-475 AIRCRAFT MAINTENANCE HANGAR - VOLUME 3 (OSF OPTION)

LIGHTING FIXTURE SCHEDULE

SCALE:
EPROJECT NO.: 1363603
CONSTR. CONTR. NO.
NAVFAC DRAWING NO. 12860240
SHEET 1039 OF 1412

OEL701

DRAWFORM REVISION: 28 AUGUST 2020

Autodesk Docs://20043_NAFA1 502 FB Maintenance Hangar/20043 F35 Hangar_OSF Hosp Annex EL R/F32024.rvt
1/16/2026 3:55:06 PM

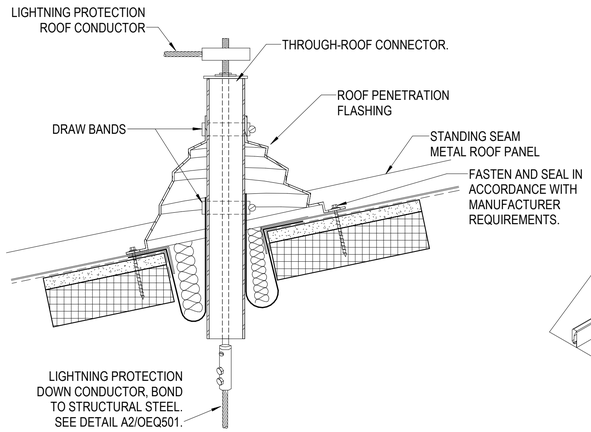

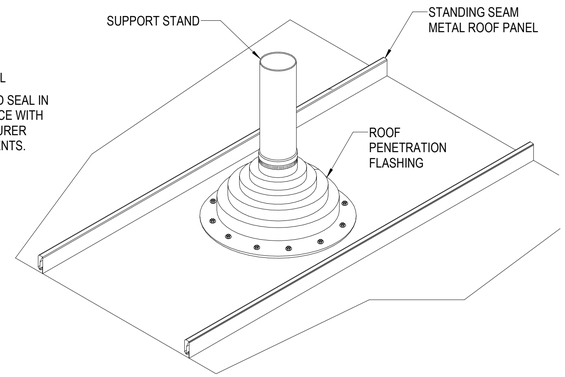

3 NOTE: ALL FASTENERS SHALL BE STAINLESS STEEL.

C1 STANDING SEAM THRU-ROOF CONNECTOR DETAIL- DN1

NTS

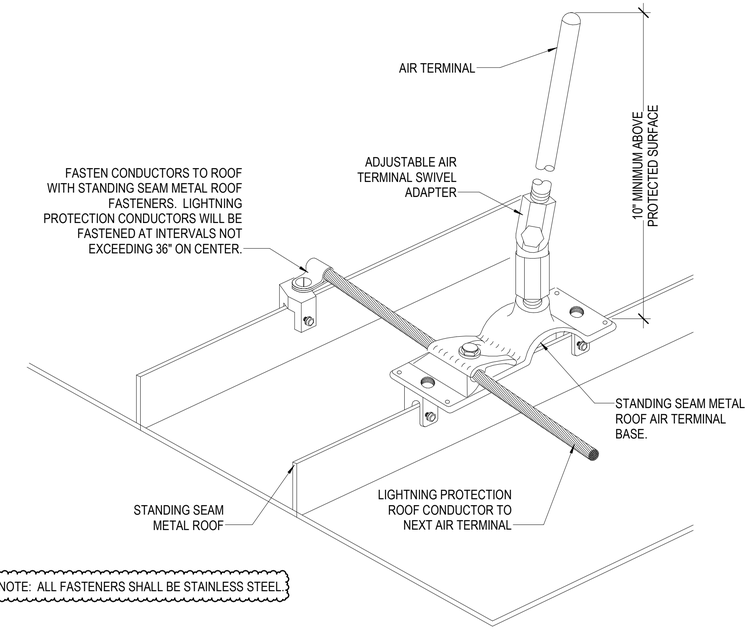

3 NOTE: ALL FASTENERS SHALL BE STAINLESS STEEL.

C4 AIR TERMINAL TYPE "A" (STANDING SEAM METAL ROOF)

NTS

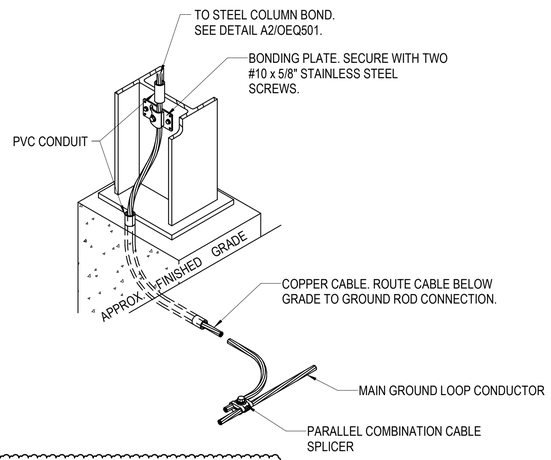

3 NOTE: ALL FASTENERS SHALL BE STAINLESS STEEL.

A1 STEEL COLUMN GROUNDING CONNECTION

NTS

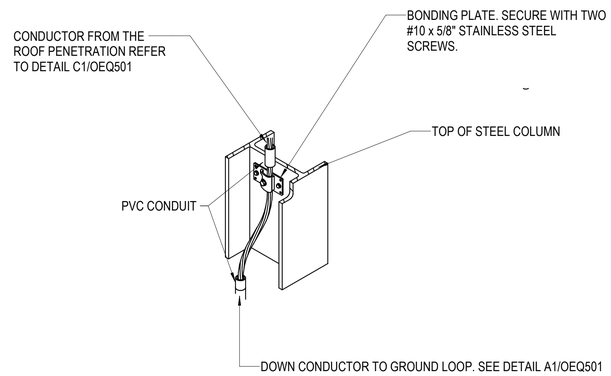

3 NOTE: ALL FASTENERS SHALL BE STAINLESS STEEL.

A2 SECURED TO STEEL COLUMN

NTS

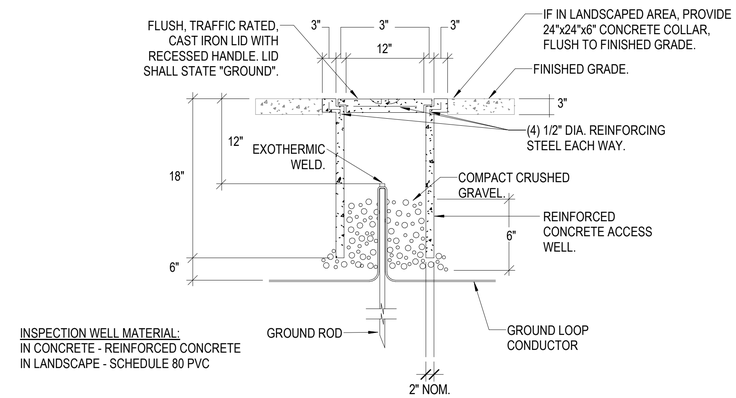

INSPECTION WELL MATERIAL:
IN CONCRETE - REINFORCED CONCRETE
IN LANDSCAPE - SCHEDULE 80 PVC

A4 GROUND ROD INSPECTION WELL

NTS

NOTE:
IF THIS DRAWING IS LESS THAN 34" X 22"
IT IS A REDUCED SIZE DRAWING

1	MOD P00005	05/2023	
2	MOD P00006 AND MOD P00007	10/2025	
3	BY AMENDMENT	1/16/2026	

STM DESCRIPTION DATE APPR

NAVFAC

NICHOLAS G. ZUBRICKI LICENSE No. 64299 STATE OF FLORIDA PROFESSIONAL ENGINEER 01/16/2026

SEAL

BAMFORTH ENGINEERS CONTRACTORS

AE INFO

APPROVED
James E. Donahue, R.A.

FOR COMMANDER NAVFAC

ACTIVITY
Approved by J. Scott Roberts
Asset Management Branch Head &
Supervisory Facility Planner, PWD
Beaufort, SC via email

SATISFACTORY TO DATE 12/15/2022

DES	RLW	DRW RLW	CHK KLM
PM/DM	KTB / RLH		
BRANCH MANAGER	JAS		
CHIEF ENG/ARCH	EJA		
FP ENGINEER	DSN		

DEPARTMENT OF THE NAVY
NAVAL FACILITIES ENGINEERING SYSTEMS COMMAND
DC CORE
MCAS BEAUFORT

NAVAL FACILITIES ENGINEERING SYSTEMS COMMAND – MID-ATLANTIC
NORFOLK, VA

BEAUFORT, SC
P-475 AIRCRAFT MAINTENANCE HANGAR - VOLUME 3 (OSF OPTION)

LIGHTNING PROTECTION DETAILS

SCALE: As indicated
EPROJECT NO.: 1363603
CONSTR. CONTR. NO.
NAVFAC DRAWING NO. 12860249
SHEET 1048 OF 1412

OEQ501

DRAWFORM REVISION: 28 AUGUST 2020

Autodesk Docs://20243 NAFA1 502 F35 Maintenance Hangar/20243 F35 - nasmt Hangar_OSF shop Annex EL-R/F32024 r4
1/16/2026 3:54:38 PM

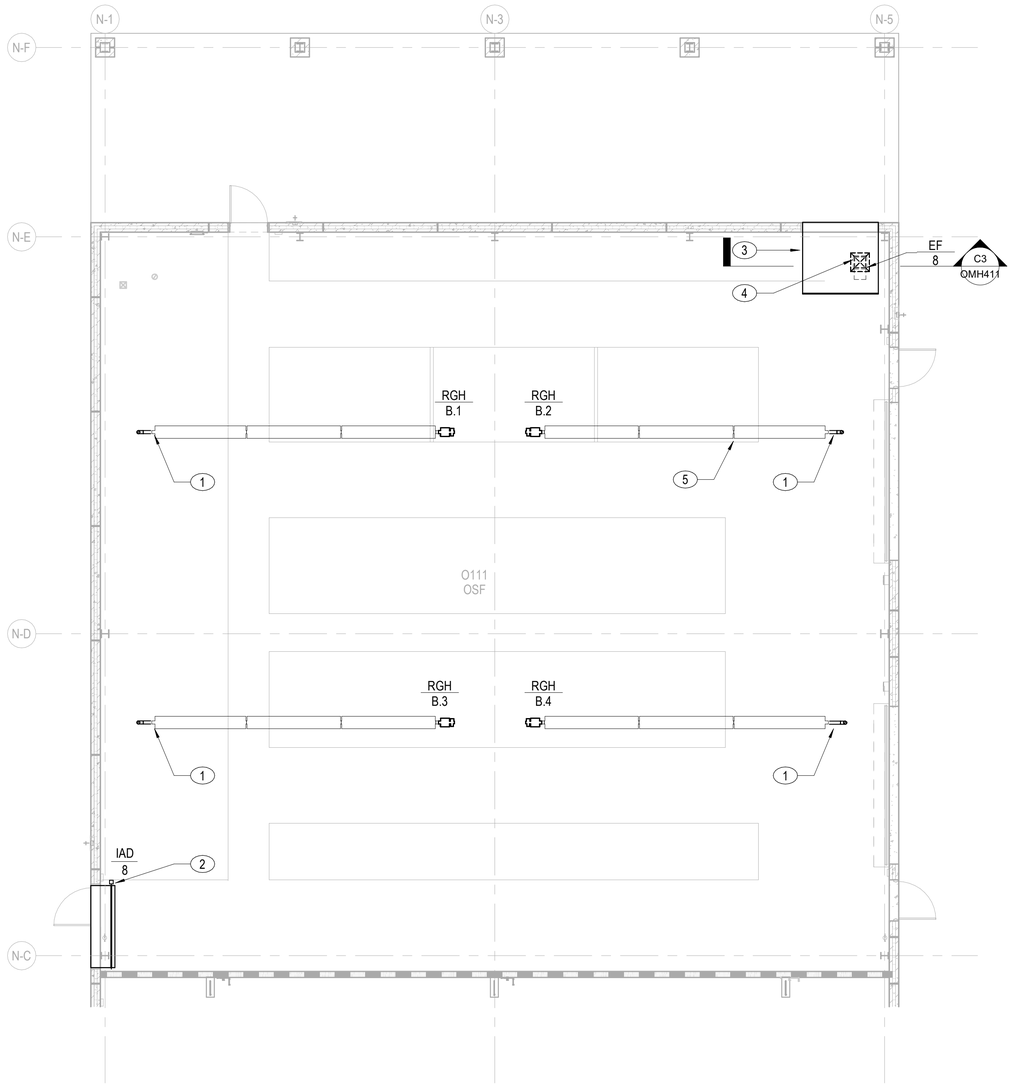

A1 DUCTWORK PLAN, GROUND FLOOR
1/8" = 1'-0"

NOTES:

SHEET NOTES:

A. REFER TO SYMBOLS, ABBREVIATIONS, AND GENERAL NOTES ON SHEET OMH001 AND OMH002.

B. REFER TO SHEET OAE101 FOR CORROSION PREVENTION AND CONTROL REQUIREMENTS.

KEY NOTES (00)

1 4" VENT UP THROUGH ROOF - TYPICAL.
2 3' DEEP INTAKE AIR PLENUM SAME SIZE AS LOUVER. REFER TO ARCHITECTURAL PLANS.
3 3' DEEP EXHAUST AIR PLENUM SAME SIZE AS LOUVER. REFER TO ARCHITECTURAL PLANS.
4 24X24 EXHAUST DUCT DOWN TO 1'-0" AFF WITH SIDE 20x20 SIDE OPENING WITH W.W.F.
5 MOUNT RGH 13'-4" A.F.F. - TYPICAL.

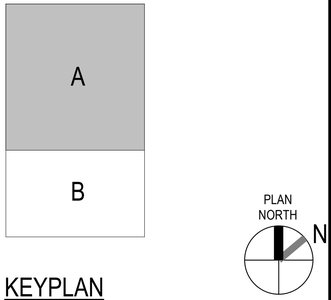

KEYPLAN

0 5' 10' 20' 30'
1/8" = 1'-0" GRAPHIC SCALE

NOTE:
IF THIS DRAWING IS LESS THAN 34" X 22"
IT IS A REDUCED SIZE DRAWING

STM	DESCRIPTION	DATE	APPR
1	MOD P00005	05/2023	
2	MOD P00006 AND MOD P00007	10/2025	
3	BY AMENDMENT	1/16/2026	

NAVFAC

JOHN EDWARD BALL
LICENSE
No 66893
STATE OF FLORIDA
01/16/2026
PROFESSIONAL ENGINEER
SEAL

BAMFORTH
ENGINEERS & CONTRACTORS
AE INFO

APPROVED
Approved by: Jonathan W. Ball
FOR COMMANDER NAVFAC
ACTIVITY
Approved by J. Scott Roberts.
Asset Management Branch Head &
Supervisory Facility Planner, PWD
Beaufort, SC via email.

SATISFACTORY TO DATE	12/15/2022
DES MAB / DRW MAB / CHK JEB	
PM/DM	KTB / RLH
BRANCH MANAGER	ALG
CHIEF ENG/ARCH	EJA
FP ENGINEER	DSN

DEPARTMENT OF THE NAVY
NAVAL FACILITIES ENGINEERING SYSTEMS COMMAND
DC CORE:
MCAS BEAUFORT
NAVAL FACILITIES ENGINEERING SYSTEMS COMMAND ~ MID-ATLANTIC
NORFOLK, VA
BEAUFORT, SC
P-475 AIRCRAFT MAINTENANCE HANGAR - VOLUME 3 (OSF OPTION)
OSF / SHOP ANNEX - DUCTWORK PLAN - GROUND FLOOR - SECTOR A

SCALE: 1/8" = 1'-0"
EPROJECT NO.: 1363603
CONSTR. CONTR. NO.
NAVFAC DRAWING NO.: 12860206
SHEET 1005 OF 1412
OMH101A

DRAWFORM REVISION: 25 AUGUST 2020

Autodesk Docs://2042 \ MFA1 502 F35 Maintenance Hangar/2042 F35 Maint Hangar_OSF Shop Annex_ME-U2024.rvt
1/14/2026 11:42:44 AM

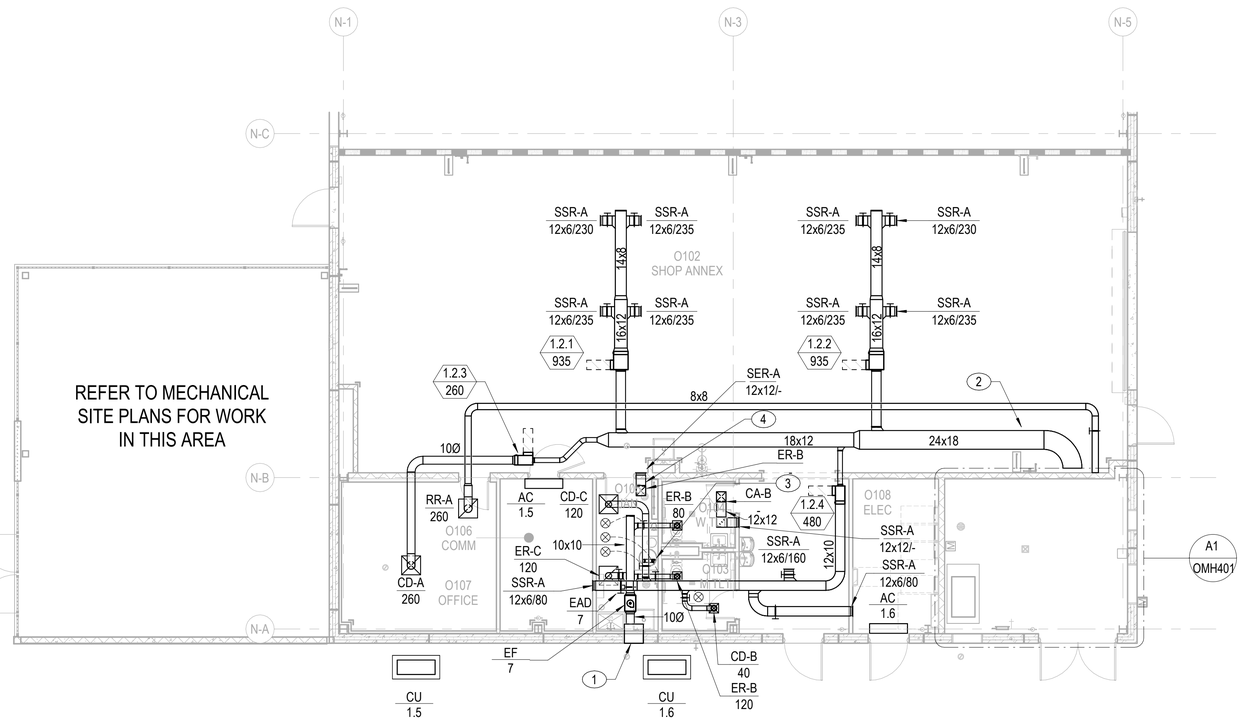

A1 DUCTWORK PLAN, GROUND FLOOR

1/8" = 1'-0"

NOTES:

SHEET NOTES:

A. REFER TO SYMBOLS, ABBREVIATIONS, AND GENERAL NOTES ON SHEET OMH001 AND OMH002.

B. REFER TO SHEET OAE101 FOR CORROSION PREVENTION AND CONTROL REQUIREMENTS.

KEY NOTES (00)

1. 2' DEEP EXHAUST AIR PLENUM SAME SIZE AS LOUVER. REFER TO ARCHITECTURAL PLANS.
2. INSTALL DUCTWORK IN EXPOSED AREAS MINIMUM 13'-0" A.F.F. - TYPICAL.
3. 4" WATER HEATER EXHAUST FLUE UP TO ROOF.
4. 12"x12" TRANSFER AIR DUCT FOR WATER HEATER COMBUSTION AIR.

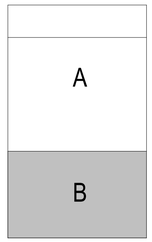

KEYPLAN

0 5' 10' 20' 30'

1/8" = 1'-0" GRAPHIC SCALE

NOTE:
IF THIS DRAWING IS LESS THAN 34" X 22"
IT IS A REDUCED SIZE DRAWING

STM	DESCRIPTION	DATE	APPR
1	MOD P00005	05/2023	
2	MOD P00006 AND MOD P00007	10/2025	
3	BY AMENDMENT	1/16/2026	

NAVFAC

JOHN EDWARD BALL
LICENSE No 66893
STATE OF FLORIDA
PROFESSIONAL ENGINEER
01/16/2026

SEAL

BAMFORTH ENGINEERS CONTRACTORS

AE INFO

APPROVED
Scott R. Roberts, P.E.

FOR COMMANDER NAVFAC

ACTIVITY
Approved by J. Scott Roberts,
Asset Management Branch Head &
Supervisory Facility Planner, PWD
Beaufort, SC via email.

SATISFACTORY TO DATE 12/15/2022

DES	MAB	DRW	MAB	CHK	JEB
PM/DM	KTB / RLH				
BRANCH MANAGER	ALG				
CHIEF ENG/ARCH	EJA				
FP ENGINEER	DSN				

DEPARTMENT OF THE NAVY
NAVAL FACILITIES ENGINEERING SYSTEMS COMMAND
DC CORE

NAVAL FACILITIES ENGINEERING SYSTEMS COMMAND ~ MID-ATLANTIC
NORFOLK, VA

MCAS BEAUFORT
BEAUFORT, SC

P-475 AIRCRAFT MAINTENANCE HANGAR - VOLUME 3 (OSF OPTION)

OSF / SHOP ANNEX - DUCTWORK PLAN - GROUND FLOOR - SECTOR B

SCALE: 1/8" = 1'-0"

EPROJECT NO.: 1363603

CONSTR. CONTR. NO.

NAVFAC DRAWING NO. 12860207

SHEET 1006 OF 1412

OMH101B

DRAWFORM REVISION: 25 AUGUST 2020

Autodesk Docs://20243_NAVFAC SE/ F35 Maintenance Hangar/20243_F35 Maint Hangar_OSF Shop Annex_ME-r2024.rvt
1/16/2026 11:42:45 AM

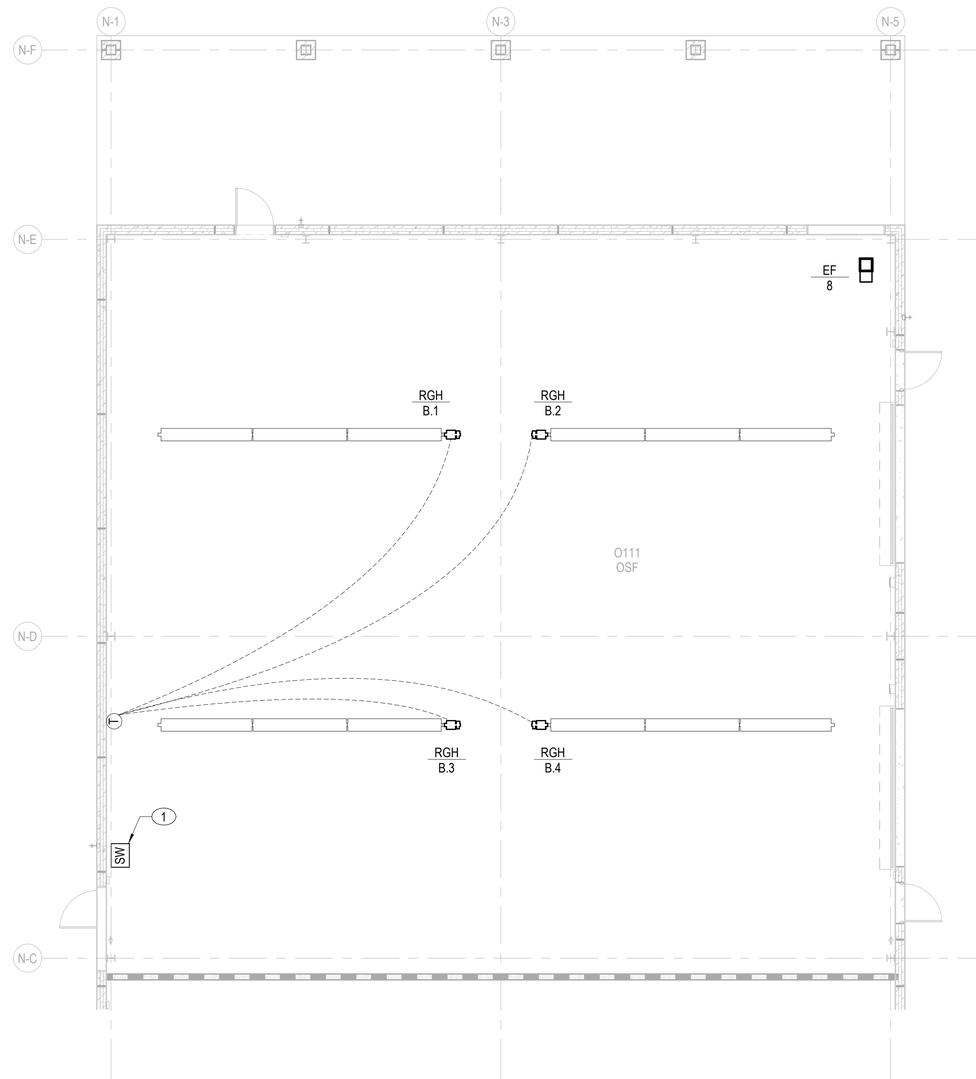

A1 PIPING PLAN, GROUND FLOOR

1/8" = 1'-0"

NOTES:

SHEET NOTES:

A. REFER TO SYMBOLS, ABBREVIATIONS, AND GENERAL NOTES ON SHEET OMH001 AND OMH002. 3

B. REFER TO SHEET OAE101 FOR CORROSION PREVENTION AND CONTROL REQUIREMENTS.

KEY NOTES (00)

1 EMERGENCY HVAC SHUT-OFF SWITCH

1	MOD P00005	05/2023			
2	MOD P00006 AND MOD P00007	10/2025			
3	BY AMENDMENT	1/16/2026			

STM DESCRIPTION DATE APPR

NAVFAC

JOHN EDWARD BALL
LICENSE
No 66893
STATE OF FLORIDA
PROFESSIONAL ENGINEER
01/16/2026

SEAL

BAMFORTH
ENGINEERS & CONTRACTORS

AE INFO

APPROVED

FOR COMMANDER NAVFAC

ACTIVITY
Approved by J. Scott Roberts,
Asset Management Branch Head &
Supervisory Facility Planner, PWD
Beaufort, SC via email.

SATISFACTORY TO DATE 12/15/2022

DES	MAB	DRW	MAB	CHK	JEB

PM/DM	KTB / RLH
BRANCH MANAGER	ALG
CHIEF ENG/ARCH	EJA
FP ENGINEER	DSN

NAVAL FACILITIES ENGINEERING SYSTEMS COMMAND
NORFOLK, VA

DEPARTMENT OF THE NAVY
NAVAL FACILITIES ENGINEERING SYSTEMS COMMAND – MID-ATLANTIC
DC CORE

MCAS BEAUFORT
BEAUFORT, SC

P-475 AIRCRAFT MAINTENANCE HANGAR - VOLUME 3 (OSF OPTION)

OSF / SHOP ANNEX - PIPING PLAN - GROUND FLOOR - SECTOR A

SCALE:	1/8" = 1'-0"
EPROJECT NO.:	1363603
CONSTR. CONTR. NO.	
NAVFAC DRAWING NO.	12860208
SHEET	1007 OF 1412

OMP101A

DRAWFORM REVISION: 25 AUGUST 2020

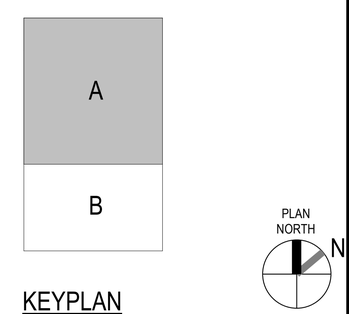

KEYPLAN

0 5' 10' 20' 30'

1/8" = 1'-0" GRAPHIC SCALE

NOTE:
IF THIS DRAWING IS LESS THAN 34" X 22"
IT IS A REDUCED SIZE DRAWING

Autodesk Docs://20240_NAVFAC SOF FB Maintenance Hangar/20240 FS8 Maint Hangar_OSF Shop Annex_ME-r2024.rvt
1/16/2026 11:42:45 AM

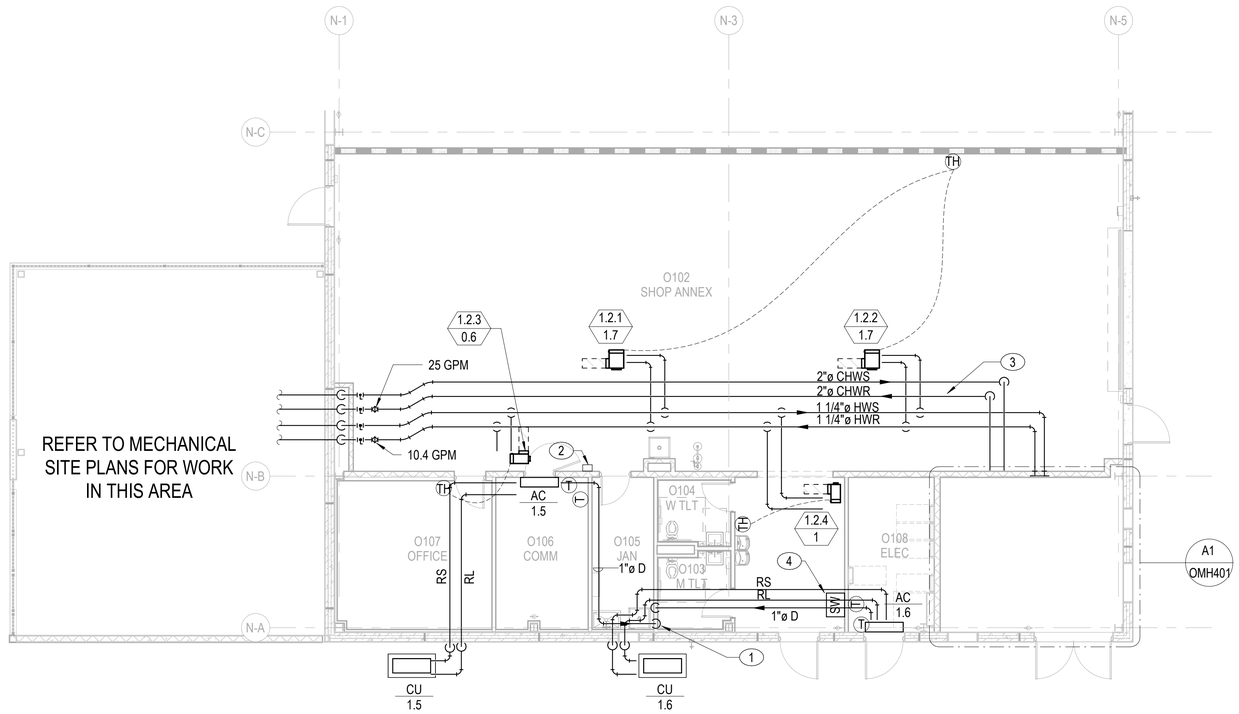

A1 PIPING PLAN, GROUND FLOOR

1/8" = 1'-0"

NOTES:

SHEET NOTES:

A. REFER TO SYMBOLS, ABBREVIATIONS, AND GENERAL NOTES ON SHEET OMH001 AND OMH002.

B. THE FIRST FLOOR IS A STRUCTURAL SLAB. ALL UTILITIES MUST BE SUPPORTED FROM THE SLAB WITH STAINLESS STEEL CONNECTIONS. UTILITIES MUST HAVE FLEXIBLE CONNECTIONS AS THE UTILITY ENTERS THE BUILDING. REFER TO SPECIFICATIONS FOR SUPPORT DETAILS. AT LOCATIONS WHERE UTILITIES ENTER THE BUILDING, THE PENETRATION THROUGH THE FOUNDATION WALLS, PRECAST WALLS, AND TURNDOWN SLAB EDGES MUST BE 6" LARGER THAN THE UTILITY TO ALLOW 6" OF SPACE BELOW THE UTILITY. 3

C. REFER TO SHEET OAE101 FOR CORROSION PREVENTION AND CONTROL REQUIREMENTS.

KEY NOTES (00)

1 1" CONDENSATE DRAIN PIPING DOWN IN WALL. EXIT WALL 12" ABOVE FINISHED FLOOR AND DISCHARGE WITH 90 DEGREE ELBOW TURNED DOWN IN JANITORS SINK.

2 WATER HEATER EMERGENCY DISCONNECT SWITCH.

3 INSTALL PIPING IN EXPOSED AREAS MINIMUM 13'-0" A.F.F. - TYPICAL.

4 EMERGENCY HVAC SHUT-OFF SWITCH

STM	DESCRIPTION	DATE	APPR
1	MOD P00005	05/2023	
2	MOD P00006 AND MOD P00007	10/2025	
3	BY AMENDMENT	1/16/2026	

NAVFAC

JOHN EDWARD BALL
LICENSE
No 66893
STATE OF FLORIDA
PROFESSIONAL ENGINEER
01/16/2026
SEAL

BAMFORTH
ENGINEERS & CONTRACTORS

AE INFO

APPROVED
FOR COMMANDER NAVFAC

ACTIVITY
Approved by J. Scott Roberts,
Asset Management Branch Head &
Supervisory Facility Planner, PWD
Beaufort, SC via email.

SATISFACTORY TO DATE 12/15/2022

DES	MAB	DRW	MAB	CHK	JEB
PM/DM	KTB / RLH				
BRANCH MANAGER	ALG				
CHIEF ENG/ARCH	EJA				
FP ENGINEER	DSN				

DEPARTMENT OF THE NAVY
NAVAL FACILITIES ENGINEERING SYSTEMS COMMAND
DC CORE:
MCAS BEAUFORT

NAVAL FACILITIES ENGINEERING SYSTEMS COMMAND ~ MID-ATLANTIC
NORFOLK, VA

BEAUFORT, SC

P-475 AIRCRAFT MAINTENANCE HANGAR - VOLUME 3 (OSF OPTION)

OSF / SHOP ANNEX - PIPING PLAN - GROUND FLOOR - SECTOR B

SCALE: 1/8" = 1'-0"
EPROJECT NO.: 1363603
CONSTR. CONTR. NO.
NAVFAC DRAWING NO. 12860209
SHEET 1008 OF 1412

OMP101B

DRAWFORM REVISION: 25 AUGUST 2020

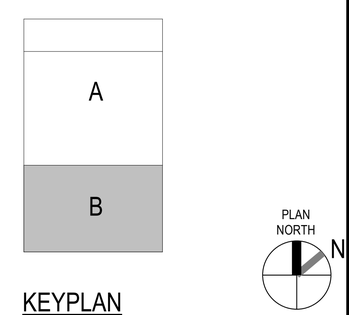

KEYPLAN

0 5' 10' 20' 30'
1/8" = 1'-0" GRAPHIC SCALE

NOTE:
IF THIS DRAWING IS LESS THAN 34" X 22"
IT IS A REDUCED SIZE DRAWING

Autodesk Docs://20042 MF-A1 302 F3 Maintenance Hangar/20042 F3 Maint Hangar_OSF Shop Annex_MF-v2024.rvt
1/14/2026 11:42:46 AM

PLUMBING GENERAL NOTES:

1. REFER TO SPECIFICATIONS FOR ALL PIPING CONSTRUCTION AND INSTALLATION REQUIREMENTS.
2. REFER TO TYPICAL DETAIL SHEETS FOR ADDITIONAL VALVING, ACCESSORIES, EQUIPMENT CONNECTIONS, AND ASSEMBLY DETAILS.
3. PIPING LOCATIONS SHOWN ARE SCHEMATIC. REFER TO SPECIFICATIONS FOR SHOP DRAWING AND COORDINATION DRAWING REQUIREMENTS. DO NOT PROCEED WITH INSTALLATION OF PIPING UNTIL APPROVED SHOP DRAWINGS ARE AVAILABLE AT THE SITE.
4. PROVIDE ACCESS PANELS IN NON-ACCESSIBLE GENERAL CONSTRUCTION SUBSTRATES FOR MAINTENANCE AND ADJUSTMENT OF ALL CONCEALED VALVES, FLOW CONTROL DEVICES AND EQUIPMENT. REFER TO SPECIFICATIONS. WOOD, GYPSUM DRYWALL AND CONCEALED SPLINE TILE CEILINGS ARE CONSIDERED NON-ACCESSIBLE.
5. PROVIDE FIRE RATED SLEEVES FOR PIPING PENETRATIONS THROUGH RATED ASSEMBLIES. COORDINATE WITH LIFE SAFETY PLANS. REFER TO TYPICAL PIPE SLEEVE DETAILS.
6. REFER TO DRAWING SECTION ILLUSTRATIONS ON MECHANICAL SHEETS FOR ADDITIONAL PLUMBING PIPING AND EQUIPMENT.
7. PROVIDE PIPE DRAINS AT LOW POINTS AND BALL VALVE AIR VENTS AT HIGH POINTS OF DOMESTIC WATER SYSTEM.
8. PLUMBING PIPING MUST NOT PASS THROUGH ELECTRIC ROOMS, COMMUNICATION ROOMS, SERVER ROOMS, OR ELEVATOR EQUIPMENT ROOMS. ONLY PIPING SERVING EQUIPMENT LOCATED IN AFOREMENTIONED ROOMS MUST BE PERMITTED.
9. DO NOT ROUTE PIPING OVER ELECITRCAL PANELS, SWITCHBOARDS, SWITCHGEAR, TRANSFORMERS, OR SIMILAR ELECTRICAL EQUIPMENT.
10. PROVIDE WATER HAMMER ARRESTORS PDI SIZE "B" ON INDIVIDUAL COLD WATER LINES SERVING WATER CLOSETS. LOCATE ARRESTOR ABOVE CEILING FOR ACCESS. ARRESTORS MUST BE PROVIDED AT OTHER PLUMBING FIXTURES, LOCATED AND SIZED IN ACCORDANCE WITH PLUMBING DRAINAGE INSTITUTE (PDI) STANDARD WH-201 AND ASSE 1010. SIZES INDICATED ARE THE MINIMUM SIZE PERMITTED. ACCESS PANELS MUST BE PROVIDED FOR ALL ARRESTORS LOCATED ABOVE NON-ACCESSIBLE CEILINGS AND WITHIN WALLS.
11. PROVIDE CLEANOUTS PER IPC, INCLUDING AT BASE OF DRAINAGE STACKS.
12. REFER TO ARCHITECTURAL INTERIOR ELEVATIONS AND FLOOR PLANS FOR LOCATION DIMENSIONS FOR PLACEMENT OF ALL PLUMBING DEVICES, FIXTURES AND FLOOR DRAINS/SINKS. ARCHITECTURAL DEFINED LOCATION DIMENSIONS TAKE PRECEDENCE OVER PLACEMENT DIMENSIONS INDICATED ON ENGINEERING PLANS. VERIFY ALL FIXTURE LOCATION DIMENSIONS PRIOR TO PIPING ROUGH-IN.
13. PROVIDE CALIBRATED BALANCING VALVES FOR HOT WATER RETURN SYSTEM. BALANCING MUST BE SELECTED BASED ON THE SPECIFIED SYSTEM FLOW RATE SETTINGS AND MANUFACTURER'S LISTED NOMINAL FLOW RATE RANGE. VALVE SIZES EXCEEDING THE NOMINAL FLOW RATE RANGE (HIGHER OR LOWER) MUST NOT BE USED.
14. PRIOR TO FINAL TURNOVER TO THE GOVERNMENT, ALL SINK AND LAVATORY FAUCETS AND FIXTURE FLUSH VALVES MUST BE TESTED AND ADJUSTED TO ENSURE PROPER OPERATION.
15. COORDINATE NATURAL GAS SERVICE PIPELINE ROUTING TO PREVENT CONFLICTS WITH OTHER UTILITIES, EQUIPMENT, FENCING, AND STORM DRAINS.
16. REFER TO SHEET OAE101 FOR CORROSION PREVENSION AND CONTROL REQUIREMENTS. (3)

PLUMBING SYMBOLS

PIPING

	SANITARY OR WASTE PIPING ABOVE GRADE/SLAB
	SANITARY OR WASTE PIPING BELOW GRADE/SLAB
CD	CONDENSATE WASTE PIPING ABOVE GRADE/SLAB
CD	CONDENSATE WASTE PIPING BELOW GRADE/SLAB
	VENT PIPING
	COLD WATER PIPING
B	BOOSTED DOMESTIC COLD WATER PIPING
	DOMESTIC HOT WATER PIPING
140°	DOMESTIC HOT WATER PIPING (140°F)
HWR	DOMESTIC HOT WATER RETURN PIPING
HWR 140°	DOMESTIC HOT WATER RETURN PIPING (140°F)
CA	COMPRESSED AIR PIPING
CAI	COMPRESSED AIR INTAKE PIPING

VALVES

SINGLE LINE	DOUBLE LINE	DESIGNATION
		PLUG VALVE
		BALL VALVE
		BUTTERFLY VALVE
		GATE VALVE
		GLOBE VALVE
		PRESSURE REGULATING VALVE/ PRESSURE REDUCING VALVE
		MANUAL BALANCING VALVE
		CHECK VALVE
		STRAINER
		BACKWATER VALVE
		VALVE IN RISER
		HOSE BIBB
		ROOF HYDRANT
		WALL HYDRANT (FREEZEPROOF)
		SAFETY RELIEF VALVE

SPECIALTIES

- HOT WATER MIXING VALVE
- FLOOR SINK
- FLOOR DRAIN
- ROOF DRAIN/AREA DRAIN/DECK DRAIN
- ROOF DRAIN
- HUB DRAIN
- VENT THROUGH ROOF
- FLOW (IN DIRECTION OF ARROW)
- ACTUATING SWITCH
- METER
- SEISMIC BRACING

FITTINGS

- RISER DOWN (ELBOW)
- RISER UP (ELBOW)
- RISE OR DROP
- BRANCH TOP CONNECTION
- BRANCH BOTTOM CONNECTION
- UNION
- CAP
- CLEANOUT
- FLOOR/EXTERIOR CLEANOUT

NOTE:
REFER TO FLOOR PLANS AND DETAILS FOR EXTENT OF SYMBOLS AND ABBREVIATIONS USED.

GENERAL IDENTIFICATION

WH	EQUIPMENT TYPE	EQUIPMENT MARK
1	SCHEDULE REFERENCE	
PDI-A	WATER HAMMER ARRESTER MARK PLUMBING DRAINAGE INSTITUTE WATER HAMMER ARRESTER SIZE	
0.01	RISER CONTINUATION MARK	
	POINT OF CONNECTION BETWEEN NEW AND EXISTING CONSTRUCTION	
	POINT OF REMOVAL - DEMOLITION	
(E)	EXISTING EQUIPMENT/PIPING DESIGNATION	

NOTE:
IF THIS DRAWING IS LESS THAN 34" X 22"
IT IS A REDUCED SIZE DRAWING

SYM	DESCRIPTION	DATE	APPR.
1	MOD P00005	05/2023	
2	MOD P00006 AND MOD P00007	10/2025	
3	BY AMENDMENT	1/16/2026	

NAVFAC

JOHN EDWARD BALL
LICENSE
No 66893
STATE OF FLORIDA
01/16/2026
PROFESSIONAL ENGINEER

BAMFORTH
ENGINEERS + SURVEYORS

AE INFO

APPROVED
Jason C. Gillette, P.E.
FOR COMMANDER NAVFAC

ACTIVITY
Approved by J. Scott Roberts,
Asset Management Branch Head &
Supervisory Facility Planner, PWD
Beaufort, SC via email.

SATISFACTORY TO DATE			12/15/2022
DES CRF	DRW HES	CHK DSR	
PM/DM			KTB / RLH
BRANCH MANAGER			ALG
CHIEF ENG/ARCH			EJA
FP ENGINEER			DSN

DEPARTMENT OF THE NAVY
DC-CORE
NAVAL FACILITIES ENGINEERING SYSTEMS COMMAND
NAVAL FACILITIES ENGINEERING SYSTEMS COMMAND – MID-ATLANTIC
NORFOLK, VA
MCAS BEAUFORT
BEAUFORT, SC
P-475 AIRCRAFT MAINTENANCE HANGAR - VOLUME 3 (OSF OPTION)
PLUMBING SYMBOLS AND GENERAL NOTES

SCALE:	NTS
EPROJECT NO.:	1363603
CONSTR. CONTR. NO.	
NAVFAC DRAWING NO.	12860188
SHEET	987 OF 1412

OPP001

DRAWFORM REVISION: 25 AUGUST 2020

Autodesk Docs://50042 VMFA1 501 F35 Maintenance Hangar/50042 F35 Maint Hangar_OSF Shop Annex_PL-V2024.rvt
1/14/2026 6:32:22 PM

TELEPHONE/DATA SYSTEM

SYMBOL	DESCRIPTION	MOUNTING
	COMBINATION VOICE/DATA OUTLET. SEE FACEPLATE CODES AND FACEPLATE DETAILS ON SHEET OTT502 FOR OUTLET CONFIGURATIONS. MOUNTING HEIGHT SUBSCRIPTS INDICATE THE FOLLOWING: OC - MOUNT ABOVE COUNTER TOP +48" - MOUNTING HEIGHT TO CENTER OTHER THAN 18" TO TOP	18" AFF TO TOP UON.
	TELEPHONE OUTLET. SEE FACEPLATE CODES AND FACEPLATE DETAILS ON SHEET OTT502 FOR OUTLET CONFIGURATIONS.	34" AFF TO CENTER UON.
	TELECOMMUNICATIONS BONDING BUSBAR. SUBSCRIPTS INDICATE THE FOLLOWING: PBB - PRIMARY BONDING BUSBAR. REFER TO C3/TT501 FOR DETAIL	ABOVE LADDER RACK
66	TYPE 66 TERMINATION BLOCK.	60" AFF TO TOP.
BEP	PRIMARY BUILDING ENTRANCE PROTECTOR.	60" AFF TO TOP.
	TELECOMMUNICATIONS EQUIPMENT RACK WITH HORIZONTAL AND VERTICAL CABLE MANAGEMENT.	FLOOR
	PLYWOOD TELEPHONE BACKBOARD.	WALL
	FIRE RATED PATHWAY ASSEMBLY. FOUR INDIVIDUAL PATHWAYS GANGED TOGETHER. SEE DETAIL A5/TT501.	AS REQUIRED
	LOW VOLTAGE LADDER RACK FOR COMMUNICATIONS SYSTEMS WIRING ONLY. 4" HIGH x18" WIDE UON.	SUSPENDED
	LOW VOLTAGE CABLE TRAY FOR COMMUNICATIONS SYSTEMS WIRING ONLY. 4" HIGH x18" WIDE UON.	SUSPENDED

BACKBONE CABLE IDENTIFICATION TAG:

------ / ------ - FMM.24

- NUMBER OF PAIRS/FIBER STRANDS
- CABLE TYPE:
  - FMM - FIBER OPTIC MULTI-MODE
  - FSM - FIBER OPTIC SINGLE MODE
  - C - COPPER
- CABLE TERMINATION ROOM NUMBER
- CABLE ORIGINATION ROOM NUMBER

PUBLIC ADDRESS SYSTEM

SYMBOL	DESCRIPTION	MOUNTING
3 S Z01	BI-DIRECTIONAL LOUD SPEAKER. SUBSCRIPTS INDICATE PAGING ZONE. SPEAKER MUST BE CORROSION PROOF WITH IP66, 316L STAINLESS STEEL ENCLOSURE USING 316 STAINLESS STEEL MOUNTING PENDANT AND MOUNTING HARDWARE.	PENDANT AT 15'-0" AFF TO BOTTOM
PAEC	PUBLIC ADDRESS SYSTEM EQUIPMENT TERMINAL CABINET WITH ZONE AMPLIFIERS. CABINET SHALL BE HINGED TO ALLOW ACCESS TO THE BACK OF CABINET MOUNTED EQUIPMENT.	6'-0" TO TOP

GENERAL NOTES

A. SEE REFLECTED CEILING PLANS IN THE AE111 SERIES SHEETS FOR EXACT LOCATION OF CEILING MOUNTED DEVICES.
B. INSTALL ALL EQUIPMENT AND DEVICES AT THE HEIGHT INDICATED. REFER TO ARCHITECTURAL INTERIOR ELEVATIONS FOR SPECIAL MOUNTING HEIGHTS AND LOCATIONS OF ELECTRICAL AND COMMUNICATIONS DEVICES. MOUNTING HEIGHTS AND LOCATIONS INDICATED ON ARCHITECTURAL ELEVATIONS TAKE PRECEDENCE OVER OTHER MOUNTING HEIGHTS AND LOCATIONS.
C. WHERE DEVICES ARE INDICATED TO BE MOUNTED ABOVE A COUNTERTOP, MOUNT DEVICE SUCH THAT BOTTOM OF COVER PLATE IS 2" ABOVE TOP OF BACK SPLASH. IF THERE IS NO BACK SPLASH, MOUNT DEVICE 2" ABOVE FINISHED COUNTER TOP SURFACE TO BOTTOM OF DEVICE COVER PLATE.
D. ALL MATERIALS AND EQUIPMENT SHALL BE LISTED AS COMPLYING WITH THE APPLICABLE STANDARDS OF UNDERWRITER'S LABORATORIES, INC OR OTHER APPROVED LISTING AGENCIES.
E. VERIFY LOCATION OF ALL FLOOR-MOUNTED OUTLETS WITH CONTRACTING OFFICER PRIOR TO ROUGH-IN.
F. WHERE CONDUIT IS ROUTED ABOVE THE FINISHED CEILING, COORDINATE LOCATION AND ROUTING WITH OTHER TRADES AND SYSTEMS TO PROVIDE A COORDINATED INSTALLATION AND TO ASSURE MAXIMUM ACCESSIBILITY TO ALL SYSTEMS. ALL JUNCTION BOXES AND PULL BOXES SHALL REMAIN ACCESSIBLE.
G. DO NOT MOUNT COMMUNICATIONS DEVICES, OUTLETS, OR BOXES BACK TO BACK UNLESS SPECIFICALLY INDICATED OTHERWISE. OFFSET OUTLETS OR BOXES IN OPPOSITE SIDES OF THE WALL BY AT LEAST 16".
H. COORDINATE EXACT MOUNTING HEIGHT AND LOCATION FOR ALL TELEVISION AND MONITOR OUTLETS WITH THE ARCHITECTURAL PLANS. THE EXACT LOCATION OF THESE OUTLETS SHALL ALSO BE COORDINATED WITH THE SPECIFIC TELEVISION MOUNTING BRACKETS BEING SUPPLIED FOR THIS PROJECT. THE OUTLETS SHALL BE CONCEALED FROM NORMAL VIEWING ANGLES BY THE TELEVISION MONITOR.
I. MAINTAIN 12" CLEAR SPACE ABOVE ALL CABLE TRAYS. MAINTAIN AT LEAST 12" CLEAR SPACE ON ONE SIDE OF ALL CABLE TRAYS FOR SIDE ACCESS TO THE CABLE TRAYS.
J. SEE A1/OTT501 FOR CONDUIT STUB-OUT TO CABLE TRAY DETAIL.

ABBREVIATIONS

A	AMPERES	INC	INCANDESCENT
AFC	ABOVE FINISHED CEILING	JB	JUNCTION BOX
AFF	ABOVE FINISHED FLOOR	KAIC	KILO-AMPERES INTERRUPTING CAPACITY
AFG	ABOVE FINISHED GRADE		
AHU	AIR HANDLING UNIT	KV	KILO-VOLTS
AIC	AMPERES INTERRUPTING CAPACITY	KVA	KILO-VOLTS-AMPERES
ATS	AUTOMATIC TRANSFER SWITCH	KVAR	KILO-VOLTS-AMPERES REACTIVE
AWG	AMERICAN WIRE GAUGE	KW	KILO-WATTS
BFC	BELOW FINISHED CEILING	KWH	KILO-WATT-HOURS
BFG	BELOW FINISHED GRADE	LAN	LOCAL AREA NETWORK
C	CONDUIT	LED	LIGHT-EMITTING DIODE
CAB	CABINET	LTG	LIGHTING
CATV	CABLE TELEVISION	m	METER
CCTV	CLOSED CIRCUIT TELEVISION	mm	MILLIMETER
CH	CHILLER	MAX	MAXIMUM
CKT	CIRCUIT	MCB	MAIN CIRCUIT BREAKER
CL	CENTERLINE	MCC	MOTOR CONTROL CENTER
CLG	CEILING	MCP	MOTOR CIRCUIT PROTECTOR
CT's	CURRENT TRANSFORMERS	MFR	MANUFACTURER
CU	COPPER	MIN	MINIMUM
DISC	DISCONNECT(ING)	MISC	MISCELLANEOUS
DWG	DRAWING(S)	MTR	MOTOR
EA	EACH	MTD	MOUNTED
EF	EXHAUST FAN	MTG	MOUNTING
EMT	ELECTRICAL METALLIC TUBING	MTS	MANUAL TRANSFER SWITCH
EQUIP	EQUIPMENT	N.C.	NORMALLY CLOSED
EUH	ELECTRIC UNIT HEATER	N.O.	NORMALLY OPEN
EWC	ELECTRIC WATER COOLER	NA	NOT APPLICABLE
EWH	ELECTRIC WATER HEATER	NC	NURSE CALL
EXH	EXHAUST	NEC	NATIONAL ELECTRICAL CODE
EXIST	EXISTING	NFPA	NATIONAL FIRE PROTECTION ASSOCIATION
FA	FIRE ALARM		
FLUOR	FLUORESCENT	PNL	PANEL
G	GROUND	PVC	POLYVINYL CHLORIDE
GEN	ENGINE GENERATOR SET	REC	RECEPTACLE
GFI	GROUND FAULT INTERRUPTER	RGS	RIGID GALVANIZED STEEL
GFCI	GROUND FAULT CIRCUIT INTERRUPTER	SF	SUPPLY FAN
GFGI	GOVERNMENT FURNISHED, GOVERNMENT INSTALLED	TEL	TELEPHONE
		TYP	TYPICAL
GFP	GROUND FAULT PROTECTION	UH	UNIT HEATER
GND	GROUND	UON	UNLESS OTHERWISE NOTED
HGT	HEIGHT	V	VOLTS
HIT	HEALTHCARE INFORMATION TECHNOLOGY	VA	VOLT-AMPERES
		VAV	VARIABLE AIR VOLUME UNIT
HOA	HAND-OFF-AUTOMATIC	W	WATTS
HP	HORSEPOWER	WAP	WIRELESS ACCESS POINT
HVAC	HEATING/VENTILATING / AIR CONDITIONING	WP	WEATHER PROOF
		XFMR	TRANSFORMER
HV	HIGH VOLTAGE		

MISCELLANEOUS

SYMBOL	DESCRIPTION	MOUNTING
00	KEY NOTE SYMBOL.	NA

INCLUDE THIS WORK ONLY IF OSF OPTION IS AWARDED.

NOTE:
IF THIS DRAWING IS LESS THAN 34" X 22"
IT IS A REDUCED SIZE DRAWING

STM	DESCRIPTION	DATE	APPR
1	MOD P00005	05/2023	
2	MOD P00006 AND MOD P00007	10/2025	
3	BY AMENDMENT	01/16/2026	

NAVFAC

REGISTERED COMMUNICATIONS DISTRIBUTION DESIGNER
Bicsi
DONALD R SELLERS
REG. NO. 110645
EXPIRES 12-31-2028
RCDD
SEAL

BAMFORTH ENGINEERS + SURVEYORS
AE INFO

APPROVED
Joseph D. Donahue, III A.
FOR COMMANDER NAVFAC

ACTIVITY
Approved by J. Scott Roberts, Asset Management Branch Head & Supervisory Facility Planner, PWD Beaufort, SC via email.

SATISFACTORY TO DATE 12/15/2022

DES	DRS	DRW	KGG	CHK	KLM
PMDM	KTB / RLH				
BRANCH MANAGER	JAS				
CHIEF ENG/ARCH	EJA				
FP ENGINEER	DSN				

DEPARTMENT OF THE NAVY
NAVAL FACILITIES ENGINEERING SYSTEMS COMMAND
DC CORE
MCAS BEAUFORT

NAVAL FACILITIES ENGINEERING SYSTEMS COMMAND ~ MID-ATLANTIC
NORFOLK, VA

BEAUFORT, SC
P-475 AIRCRAFT MAINTENANCE HANGAR - VOLUME 3 (OSF OPTION)

TELECOMMUNICATIONS LEGEND AND ABBREVIATIONS

SCALE: As indicated
EPROJECT NO.: 1363603
CONSTR. CONTR. NO.
NAVFAC DRAWING NO.: 12860251
SHEET 1050 OF 1412

OTG001

DRAWFORM REVISION: 25 AUGUST 2020

Autodesk Docs://20242 MFA FY 502 T38 Maintenance Hangar/20242 F35 maint Hangar_OSF shop Annex LV-R/T20241.rvt
1/14/2026 5:09:54 PM

NOTES:

SHEET NOTES:

3 A. REFER TO SHEET OAE101 FOR SPACES THAT REQUIRE CORROSION AND CONTROL PREVENTION.

KEY NOTES (00)

1 MOUNT CABLE TRAY IN THIS ROOM AT 12'-0" ABOVE FINISHED FLOOR TO BOTTOM.

2 (4) 4", 1 HOUR FIRE RATED WALL PENETRATION ASSEMBLIES.

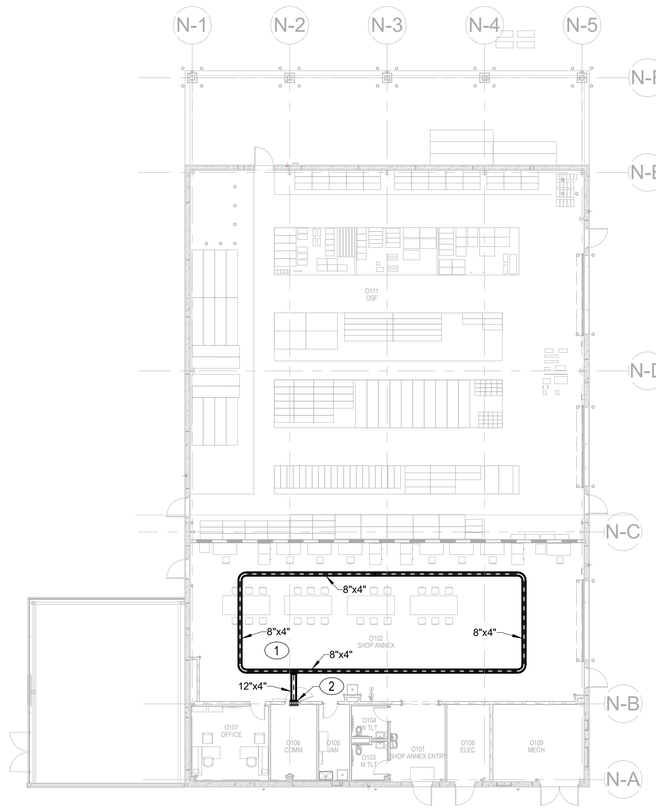

A2 OSF - FLOOR PLAN - GROUND FLOOR - OVERALL - TELECOMMUNICATIONS

1/16" = 1'-0"

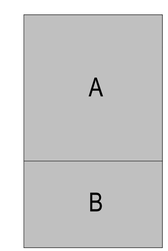

KEYPLAN

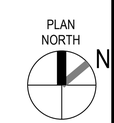

0 10' 20' 40' 60'

1/16" = 1'-0" GRAPHIC SCALE

INCLUDE THIS WORK ONLY IF OSF OPTION IS AWARDED.

NOTE:
IF THIS DRAWING IS LESS THAN 34" X 22"
IT IS A REDUCED SIZE DRAWING

STM	DESCRIPTION	DATE	APPR
1	MOD P00005	05/2023	
2	MOD P00006 AND MOD P00007	10/2025	
3	BY AMENDMENT	01/16/2026	

NAVFAC

REGISTERED COMMUNICATIONS DISTRIBUTION DESIGNER
Bicsi
DONALD R SELLERS
REG. NO. 110645
EXPIRES 12-31-2026
RCDD
SEAL

BAMFORTH ENGINEERS • CONTRACTORS

AE INFO

APPROVED

FOR COMMANDER NAVFAC

ACTIVITY
Approved by J. Scott Roberts,
Asset Management Branch Head &
Supervisory Facility Planner, PWD
Beaufort, SC via email.

SATISFACTORY TO DATE 12/15/2022

DES	DRS	DRW	KGG	CHK	KLM
PMDM	KTB / RLH				
BRANCH MANAGER	JAS				
CHIEF ENG/ARCH	EJA				
FP ENGINEER	DSN				

NAVAL FACILITIES ENGINEERING SYSTEMS COMMAND
NORFOLK, VA

DEPARTMENT OF THE NAVY
NAVAL FACILITIES ENGINEERING SYSTEMS COMMAND ~ MID-ATLANTIC

DC CORE:
MCAS BEAUFORT

BEAUFORT, SC

P-475 AIRCRAFT MAINTENANCE HANGAR - VOLUME 3 (OSF OPTION)

OSF / SHOP ANNEX - FLOOR PLAN - OVERALL - TELECOMMUNICATIONS

SCALE: 1/16" = 1'-0"

EPROJECT NO.: 1363603

CONSTR. CONTR. NO.

NAVFAC DRAWING NO.
12860252

SHEET 1051 OF 1412

OTT101

DRAWFORM REVISION: 25 AUGUST 2020

Autodesk Docs://2042 MF A1 302 FB Maintenance Hangar/2042-FB- maint Hangar_OSF Shop Annex LV-R17.2024.rvt
1/14/2026 5:10:07 PM

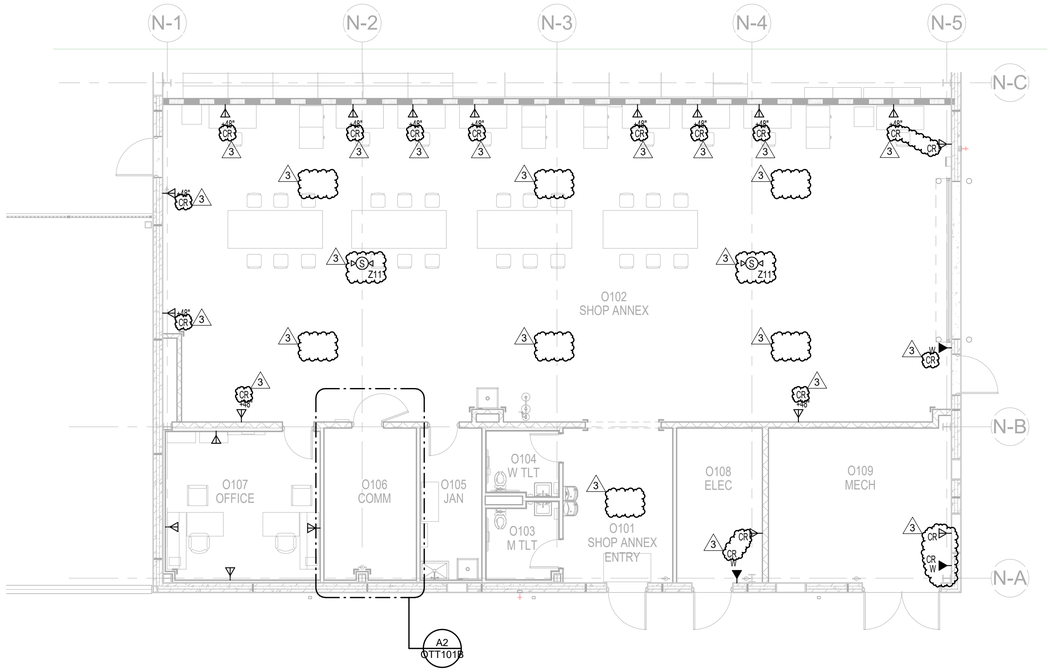

B2 OSF - FLOOR PLAN - GROUND FLOOR - SECTOR B - TELECOMMUNICATIONS

1/8" = 1'-0"

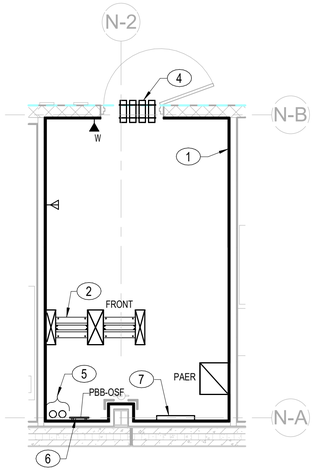

FLOOR PLAN

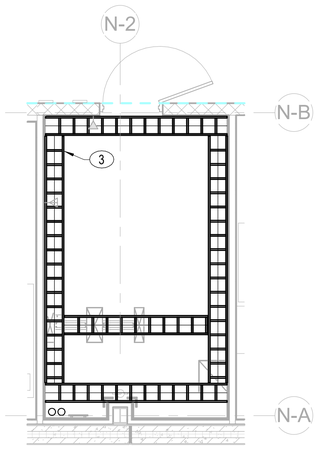

LADDER RACK PLAN

A2 ENLARGED COMMUNICATIONS ROOM O106

1/4" = 1'-0"

INCLUDE THIS WORK ONLY IF OSF OPTION IS AWARDED.

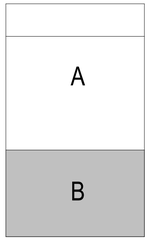

KEYPLAN

0 5' 10' 20' 30'
1/8" = 1'-0" GRAPHIC SCALE

0 1' 5' 10' 15'
1/4" = 1'-0" GRAPHIC SCALE

NOTE:
IF THIS DRAWING IS LESS THAN 34" X 22"
IT IS A REDUCED SIZE DRAWING

NOTES:

SHEET NOTES:

3 A. REFER TO SHEET OAE101 FOR SPACES THAT REQUIRE CORROSION AND CONTROL PREVENTION.

KEY NOTES (00)

1. 100% VOID FREE, FIRE RATED, 3/4" PLYWOOD BACKBOARD FROM FINISHED FLOOR TO 8'-0" AFF. PAINT ALL SIDES AND EDGES WITH TWO COATS OF FIRE RETARDANT PAINT. DO NOT PAINT OVER FIRE RATING LABEL. TYPICAL FOR ALL WALLS.
2. 19" WIDE X 7' TALL TWO POST RACK, TYPICAL.
3. WALL SUPPORTED 12" WIDE LADDER RACK CABLE RUNWAY. PROVIDE TRIANGULAR WALL STEEL SUPPORT BRACKETS AS REQUIRED. MOUNT LADDER RACK SYSTEM AT 6" ABOVE THE TOP OF THE EQUIPMENT RACKS.
4. (4) 4", 1 HOUR FIRE RATED WALL PENETRATION ASSEMBLIES.
5. (2) 4" CONDUITS, SEE SHEET TS105 FOR CONTINUATION.
6. MOUNT PBB AT 12" ABOVE LADDER RACK TO CENTER.
7. WALL SPACE FOR OSP COPPER CABLE TERMINATIONS AND BUILDING ENTRANCE PROTECTORS.

STM	DESCRIPTION	DATE	APPR
1	MOD P00005	05/2023	
2	MOD P00006 AND MOD P00007	10/2025	
3	BY AMENDMENT	01/16/2026	

NAVFAC

REGISTERED COMMUNICATIONS DISTRIBUTION DESIGNER
BICSI
DONALD R SELLERS
REG. NO. 110645
EXPIRES 12-31-2026
RCDD
SEAL

BAMFORTH ENGINEERS & CONTRACTORS
AE INFO

APPROVED
FOR COMMANDER NAVFAC

ACTIVITY
Approved by J. Scott Roberts,
Asset Management Branch Head &
Supervisory Facility Planner, PWD
Beaufort, SC via email.

SATISFACTORY TO DATE	12/15/2022
DES DRS / DRW KGG / CHK KLM	
PMDM	KTB / RLH
BRANCH MANAGER	JAS
CHIEF ENG/ARCH	EJA
FP ENGINEER	DSN

NAVAL FACILITIES ENGINEERING SYSTEMS COMMAND
NORFOLK, VA

DEPARTMENT OF THE NAVY
NAVAL FACILITIES ENGINEERING SYSTEMS COMMAND ~ MID-ATLANTIC

DC CORE:
MCAS BEAUFORT
BEAUFORT, SC

P-475 AIRCRAFT MAINTENANCE HANGAR - VOLUME 3 (OSF OPTION)

OSF / SHOP ANNEX - FLOOR PLAN - SECTOR B - TELECOMMUNICATIONS

SCALE:	As indicated
EPROJECT NO.:	1363603
CONSTR. CONTR. NO.	
NAVFAC DRAWING NO.	12860254
SHEET 1053 OF 1412	

OTT101B

DRAWFORM REVISION: 25 AUGUST 2020

Autodesk Docs://2042 NAF A1 302 FS Maintenance Hangar/2042-FS5 maint hangar_OSF shop Annex LV.RVT/2024.rvt
1/14/2026 5:10:20 PM

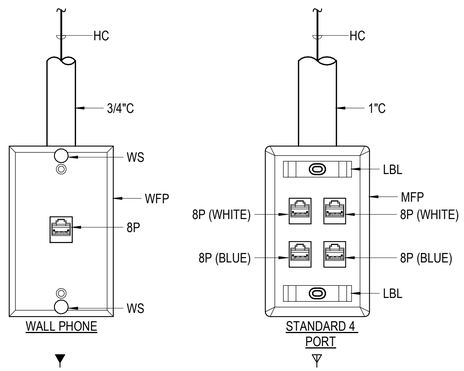

DETAIL CODES	
8P	8 POSITION MODULAR JACK
1"C	1" CONDUIT TO NEAREST CABLE TRAY
3/4"C	3/4" CONDUIT TO NEAREST CABLE TRAY
B	BLANK INSERT
CX	COAXIAL TELEVISION CABLE TO DIRECTIONAL COUPLER
FC	F-TYPE COAXIAL CONNECTOR
HC	HORIZONTAL CABLE(S)
LBL	LABEL SPACE
MFP	MODULAR FACE PLATE
NC	CATEGORY 6A CABLE TO NURSE CALL PATIENT STATION. SEE 2/ET603 FOR ADDITIONAL REQUIREMENTS.
WFP	WALL PHONE FACE PLATE
WS	WALL PHONE MOUNTING STUD

FACE PLATE CODES	
CR	CORROSION RESISTANT. PROVIDE 316 STAINLESS STEEL FACEPLATE WITH GEL FILLED 8P JACKS FOR COPPER CABLE TERMINATIONS AND GEL FILLED SC CONNECTORS FOR FIBER OPTIC CABLE TERMINATIONS.
W	SINGLE PORT FACE PLATE. WALL PHONE WITH ONE 8P JACK AND MOUNTING STUDS

DETAIL NOTES:

A. ALL BACK BOXES SHALL BE 4 11/16" BY 2 7/8" DEEP WITH SINGLE GANG PLASTER RING UNLESS OTHERWISE INDICATED.
B. PROVIDE BLANK INSERT FOR ALL UNUSED FACEPLATE PORTS.
C. PROVIDE (1) CATEGORY 6A, 4 PAIR HORIZONTAL CABLE FOR EACH 8 POSITION MODULAR JACK FROM THE OUTLET TO HORIZONTAL PATCH PANEL IN THE INDICATED COMMUNICATIONS ROOM. SEE TELECOMMUNICATIONS ZONE ALLOCATION PLAN FOR COMMUNICATIONS ROOM IN WHICH CABLES ARE TERMINATED.
D. SEE A1/OTT501 FOR CONDUIT TO CABLE TRAY STUB OUT DETAIL.
3 E. PROVIDE INDOOR/OUTDOOR RATED COPPER AND/OR FIBER OPTIC CABLES FOR OUTLETS INDICATED AS CORROSION RESISTANT.

A1 TYPICAL VOICE / DATA OUTLET DETAILS
NOT TO SCALE

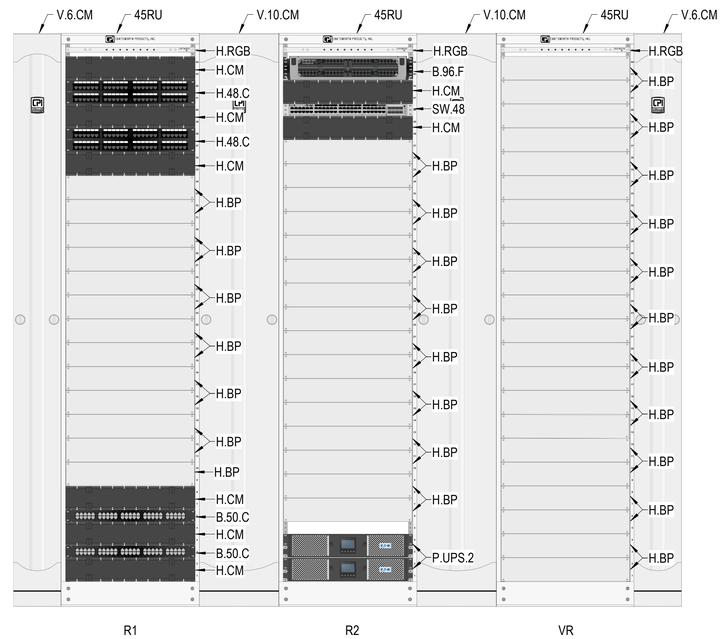

48-PORT PATCH PANEL AND 48-PORT SWITCH CALCULATIONS

OUTLET TYPE		OUTLET QUANTITY	TOTAL PORTS	NUMBER OF CABLES
TOTAL 3 PORT DATA OUTLETS				
	STANDARD OUTLET	20	3	60
MF	MODULAR FURNITURE OUTLET	0	3	0
TOTAL 1 PORT DATA OUTLETS				
	WALL PHONE OUTLET	4	1	4
WEL	ELEVATOR OUTLET	0	1	0
TOTAL TV OUTLETS				
TV	TV OUTLET	0	2	0
	TOTAL FLOOR BOXES	0	6	0
TOTAL NUMBER OF CABLES				64

TOTAL NUMBER OF CABLES	64
TOTAL NUMBER OF 48 PORT HORIZONTAL COPPER PATCH PANELS	2
TOTAL NUMBER OF 48 PORT SWITCHES	1

A3 O106 HIT RACK ELEVATION
NOT TO SCALE

NOTES:

SHEET NOTES:

A. HIT RACKS SHALL ONLY BE USED TO TERMINATE HIT NETWORKING CABLE.

RACK ELEVATION EQUIPMENT CODES

CODE	DESCRIPTION
H.48.C	CATEGORY 6A, 48 PORT HORIZONTAL COPPER PATCH PANEL
B.96.F	96 PORT FIBER OPTIC PATCH PANEL WITH LC CONNECTORS FOR BACKBONE CABLES
B.50.C	50 PAIR COPPER BACKBONE CABLE PATCH PANEL FOR BACKBONE CABLES
H.CM	HORIZONTAL CABLE MANAGEMENT
H.BP	BLANK FILLER PANEL
H.RGB	RACK MOUNTED GROUND BAR
V.6.CM	DOUBLE SIDED 6" VERTICAL CABLE MANAGEMENT
45RU	7' HIGH, 45RU EQUIPMENT RACK
SW.48	48 PORT SWITCH, GOVERNMENT FURNISHED, GOVERNMENT INSTALLED
P.UPS.2	2KVA UPS, GOVERNMENT FURNISHED, GOVERNMENT INSTALLED

PATCH PANEL FORMULA

(TOTAL # OF CABLES)*1.25/48

- NUMBER OF PORTS PER PATCH PANEL
- TOTAL TERMINATED CABLES PLUS 25%
- TOTAL TERMINATED CAT6A HORIZONTAL CABLES IN TELECOMMUNICATIONS ZONE

SWITCH FORMULA

(((TOTAL # OF CABLES)*0.35))*1.3/48

- NUMBER OF PORTS PER SWITCH
- TOTAL TERMINATED CABLES PLUS 30%
- SWITCH PORT DIVERSITY FACTOR
- TOTAL TERMINATED CAT6A HORIZONTAL CABLES IN TELECOMMUNICATIONS ZONE

B4 RACK ELEVATION GENERAL NOTES
NOT TO SCALE

INCLUDE THIS WORK ONLY IF OSF OPTION IS AWARDED.

NOTE:
IF THIS DRAWING IS LESS THAN 34" X 22"
IT IS A REDUCED SIZE DRAWING

SYM	DESCRIPTION	DATE	APPR
1	MOD P00005	05/2023	
2	MOD P00006 AND MOD P00007	10/2025	
3	BY AMENDMENT	01/16/2026	

NAVFAC

REGISTERED COMMUNICATIONS DISTRIBUTION DESIGNER
Bicsi
DONALD R SELLERS
REG. NO. 110645
EXPIRES 12-31-2028
RCDD
SEAL

BAMFORTH ENGINEERS & CONSULTANTS
A/E INFO

APPROVED
FOR COMMANDER NAVFAC

ACTIVITY
Approved by J. Scott Roberts, Asset Management Branch Head & Supervisory Facility Planner, PWD Beaufort, SC via email.

SATISFACTORY TO DATE 12/15/2022

DES	DRS	DRW KGG	CHK KLM
PM/DM	KTB / RLH		
BRANCH MANAGER	JAS		
CHIEF ENG/ARCH	EJA		
FP ENGINEER	DSN		

DEPARTMENT OF THE NAVY
NAVAL FACILITIES ENGINEERING SYSTEMS COMMAND
DC CORE
NAVAL FACILITIES ENGINEERING SYSTEMS COMMAND - MID-ATLANTIC
NORFOLK, VA
MCAS BEAUFORT
BEAUFORT, SC
P-475 AIRCRAFT MAINTENANCE HANGAR - VOLUME 3 (OSF OPTION)
TELECOMMUNICATIONS DETAILS

SCALE: As indicated
EPROJECT NO.: 1363603
CONSTR. CONTR. NO.
NAVFAC DRAWING NO. 12860256
SHEET 1055 OF 1412

OTT502

DRAWFORM REVISION: 25 AUGUST 2020

Autodesk Docs://20242 NAFA T 501 F35 Maintenance Hangar/20242 F35 Maintenance Hangar_OSF shop Annex_LV RVT2024.rvt
1/14/2026 5:10:29 PM