GENERAL ABBREVIATIONS

# AND SYMBOLS	
#	NUMBER / POUND
&	AND
@	AT
A	
A	AIR
A/C	AIR CONDITIONED
A/E	ARCHITECT-ENGINEER
ACT	ACOUSTICAL CEILING TILE
AD	AREA DRAIN
ADA	AMERICANS WITH DISABILITIES ACT
AFF	ABOVE FINISHED FLOOR
AHJ	AUTHORITY HAVING JURISDICTION
AHU	AIR HANDLING UNIT
ALT	ALTERNATE
ALUM	ALUMINUM
AMP	AMPERE
AO	ACCESS OPENING
APPROX	APPROXIMATELY
ARCH	ARCHITECTURAL
B	
BAL	BALANCE
BD	BOARD
BKOP	BACK OF PRECAST / BACK OF PANEL
BLDG	BUILDING
BLK	BLANK
BM	BEAM
BO	BOTTOM OF
BOP	BOTTOM OF PRECAST
BOS	BOTTOM OF STEEL
BRG	BEARING
BTUH	BRITISH THERMO UNIT / HOUR
C	
CCT	CUBICLE CURTAIN TRACK
CG	CORNER GUARD
CJ	CONTROL / CONSTRUCTION JOINT
CL	CENTER LINE
CLG	CEILING
CLL	COLUMN LINE
CLR	CLEAR
cm	CENTIMETER
CMU	CONCRETE MASONRY UNIT
CO	CONTRACTING OFFICER
CO2	CARBON DIOXIDE
CONC	CONCRETE
CONT	CONTINUED / CONTINUOUS
COORD	COORDINATE
CTJ	CONTRACTION JOINT
CTR	CENTER
D	
D	DEEP / DEPTH
dBA	UNIT OF SOUND
DEG	DEGREE
DIA	DIAMETER
DIMS	DIMENSIONS
DN	DOWN
DR	DOOR
DWG	DRAWING(S)
DWR	DRAWER
E	
EA	EACH
EE	EACH END
EJ	EXPANSION JOINT
EL	ELEVATION
EOS	EDGE OF SLAB
EQ	EQUAL
ETC	ET CETERA
ETR	EXISTING TO REMAIN
EWC	ELECTRIC WATER COOLER
EWS	EYE WASH STATION
EXIST	EXISTING

GENERAL ABBREVIATIONS

F	
F	FILLER
FAX	FACSIMILE
FE	FIRE EXTINGUISHER
FEC	FIRE EXTINGUISHER CABINET
FF	FINISHED FLOOR
FHC	FIRE HOSE CABINET
FIN	FINISHED
FLR	FLOOR
FO	FACE OF
FOS	FACE OF SLAB / FACE OF STUD
FT	FOOT / FEET
G	
G	GAS
GA	GAGE
GALV	GALVANIZED
GB	GRAB BAR
GC	GENERAL CONTRACTOR
GEM	GLOBAL ELECTRIC MOTORCARS
H	
H	HIGH
HC	HANDICAP
HDWR	HARDWARE
HE	HORIZONTAL EXIT
HM	HOLLOW METAL
HR	HOUR
I	
IC	INTERCOM
ID	INSIDE DIAMETER
IN	INCH(ES)
INFO	INFORMATION
J	
JT	JOINT
K	
kPA	KILOPASCAL
L	
LB	POUND
LF	LINEAR FEET
LL	ANGLE
M	
m	METERS
MAX	MAXIMUM
MFR	MANUFACTURER
MIN	MINIMUM
MISC	MISCELLANEOUS
mm	MILLIMETERS
MO	MASONRY OPENING
N	
N	NORTH
N/A	NOT APPLICABLE
NIC	NOT IN CONTRACT
NO	NUMBER
NOM	NOMINAL
NTS	NOT TO SCALE
O	
OC	ON CENTER
OD	OUTSIDE DIAMETER
OPH	OPPOSITE HAND
OPNG	OPENING
P	
PL	PLATE
PLAM	PLASTIC LAMINATE
PR	PAIR
PSF	POUNDS per SQUARE FOOT
PSI	POUNDS per SQUARE INCH
PT	PRESSURE TREATED / PAINT
PTS	PNEUMATIC TUBE STATION
PV	PHOTOVOLTAIC PANEL

GENERAL ABBREVIATIONS

Q	
QTR	QUARTER
QTY	QUANTITY
R	
R	RISER / RADIUS
RAL	FEDERAL COLOR PALETTE
RCP	REFLECTED CEILING PLAN
RE	RESIDENT ENGINEER
RENO	RENOVATE / RENOVATION
REQ	REQUIRED
RO	ROUGH OPENING
S	
S	SOUTH / SINK
SEC	SECONDARY
SF	SQUARE FEET
SIM	SIMILAR
SJ	SEISMIC JOINT
SPECS	SPECIFICATION
SQ	SQUARE
SST	STAINLESS STEEL
ST	STAINED
STC	SOUND TRANSMISSION CLASS
STL	STEEL
SWGR	SWITCHGEAR
T	
T	TREAD
TEL	TELEPHONE
TEMP	TEMPERATURE / TEMPORARY
THD	THRESHOLD
THK	THICKNESS
THRU	THROUGH
TLT	TOILET
TO	TOP OF
TOC	TOP OF CONCRETE (CURB)
TOF	TOP OF FOOTING
TOM	TOP OF MASONRY
TOP	TOP OF PRECAST
TOS	TOP OF STEEL
TYP	TYPICAL
U	
U	HEAT TRANSFER COEFFICIENT
U/C/B	UNDER COUNTER BASE
UC	UNDERCUT
UL	UNDERWRITERS LABORATORY
UNO	UNLESS NOTED OTHERWISE
UR	URINAL
V	
V	VACUUM
VAR	VARIES
VCT	VINYL COMPOSITION TILE
VERT	VERTICAL
VTR	VENT THRU ROOF
W	
W	WEST
W	WIDTH
W/	WITH
W/O	WITHOUT
WD	WOOD
WH	WALL HUNG / WATER HEATER
WP	WATERPROOF / WORKING UNIT
WT	WEIGHT
WWF	WELDED WIRE FABRIC

GENERAL SYMBOLS

00 VIEW NAME
0/0" = 1'-0"

A1 / AE101 — EXTERIOR ELEVATION REFERENCE

1 Ref / → Ref AE101 ← Ref / 1 Ref — INTERIOR ELEVATION REFERENCE

A1 / AE312 — SECTION REFERENCE

A1 / AE101 — DETAIL / SECTION NUMBER; REFERENCE FOR DETAIL OR ENLARGED PLAN; SHEET NUMBER

1239 — ROOM NUMBER
STORAGE — ROOM NAME LINE 1
STORAGE — ROOM NAME LINE 2

092900.A01 — MATERIAL NOTES; INDEPENDENT SUFFIX MATERIAL OR NOTE SPECIFIER FOR CONDOC LIST; SPECIFICATION SECTION PREFIX

LEADER OR NOTATION

00 — EXISTING COLUMN REFERENCE AND GRID LINES

00 — NEW COLUMN REFERENCE AND GRID LINES

VAPOR BARRIER (DETAILS)

LATH (DETAILS)

BITUMINOUS DAMPROOFING (DETAILS)

WORK ABOVE (PLANS)

REF. LINE / SEE 00/0-00-000 — PARTIAL PLAN REFERENCE LINE

BUILDING LEVEL OR ELEVATION. ALL BUILDINGS HAVE FIRST FLOOR SET AT 0'-0". COORDINATE WITH CIVIL DRAWINGS FOR FLOOR LEVEL RELATIVE TO SITE AND EACH OTHER.

SPOT ELEVATION RELATED TO DISTANCE ABOVE FIRST FLOOR

BREAK LINE

00 — REVISION IDENTIFIER

00 — KEY NOTE

℄ — CENTERLINE

PLAN NORTH N — PLAN NORTH; TRUE NORTH

TYPICAL SHEET NUMBER FORMAT

PAE100A1
- MAXIMUM OF 8 CHARACTERS
- SHEET SEQUENCE NUMBER
- SHEET TYPE
- LEVEL 2, DISCIPLINE DESIGNATOR
- BUILDING IDENTIFIER PREFIX, REFER TO BUILDING IDENTIFIER PREFIX LEGEND

BUILDING IDENTIFIER PREFIX LEGEND	
BUILDING NAME	BUILDING PREFIX
BUILDING 414	M
BUILDING 727	N
OSF / ANNEX	O
PARKING GARAGE	P
HANGAR	-

ARCHITECTURAL SYMBOLS

GLAZING AND LOUVER PREFIXES
W = WINDOW
L = LOUVER
B = BORROWED LITE
S = STOREFRONT
G = GATE
C = CURTAINWALL
T = TRANSLUCENT PANEL

00 — PRECAST WALL PANEL

PARTITION TYPE NAMING CONVENTION

PARTITION SYMBOL ON PLAN

A3AC.1 — PARTITION TYPE SYMBOL

FIRE RATING
MODIFIERS
STUD OR CMU SIZE
ASSEMBLY TYPE

101.1 — DOOR NUMBERS: THE PRIMARY DOOR NUMBER IS THE ROOM NUMBER. A DECIMAL IS ADDED TO DISTINGUISH ADDITIONAL DOORS IN THE ROOM.

EXISTING PARTITION, DOOR, FRAME AND HARDWARE TO BE REMOVED

PARTITION LEGEND

- NON-RATED PARTITION
- SMOKE PARTITION (NON-RATED)
- SMOKE BARRIER
- 1 HOUR FIRE BARRIER

NOTE:
IF THIS DRAWING IS LESS THAN 34" X 22"
IT IS A REDUCED SIZE DRAWING

NUM	DESCRIPTION	DATE	APPR
1	MOD P00005	05/2023	
2	MOD P00006 AND P00007	10/2025	

NAVFAC

STATE OF FLORIDA — BILLY KEITH HOLLOWAY — AR93022 — REGISTERED ARCHITECT — 1-31-25

BAMFORTH ENGINEERS ARCHITECTS

AE INFO

APPROVED
FOR COMMANDER NAVFAC — 12/15/2025

ACTIVITY: Approved by J. Scott Roberts, Asset Management Branch Head & Supervisory Facility Planner, PWD Beaufort, SC via email.

SATISFACTORY TO DATE 12/15/2022

DES	EAD	DRW	RWR	CHK	BKH
PM/DM	KTB / RLH				
BRANCH MANAGER	CGM				
CHIEF ENG/ARCH	EJA				
FP ENGINEER	DSN				

DEPARTMENT OF THE NAVY
NAVAL FACILITIES ENGINEERING SYSTEMS COMMAND
DC CORE
MCAS BEAUFORT

NAVAL FACILITIES ENGINEERING SYSTEMS COMMAND – MID-ATLANTIC
NORFOLK, VA

BEAUFORT, SC

P-475 AIRCRAFT MAINTENANCE HANGAR - VOLUME 4 (PARKING GARAGE OPTION)

ARCHITECTURAL ABBREVIATIONS AND SYMBOLS

SCALE: As indicated
EPROJECT NO.: 1363603
CONSTR. CONTR. NO.
NAVFAC DRAWING NO. 12860308
SHEET 1087 OF 1412

PAE001

DRAWFORM REVISION: 26 AUGUST 2020

Autodesk Docs://20043.MVM.500.750 Maintenance Hangar/20042 F35 Maint Hangar_Parking Facility.rvt
11/4/2025 1:11:29 PM

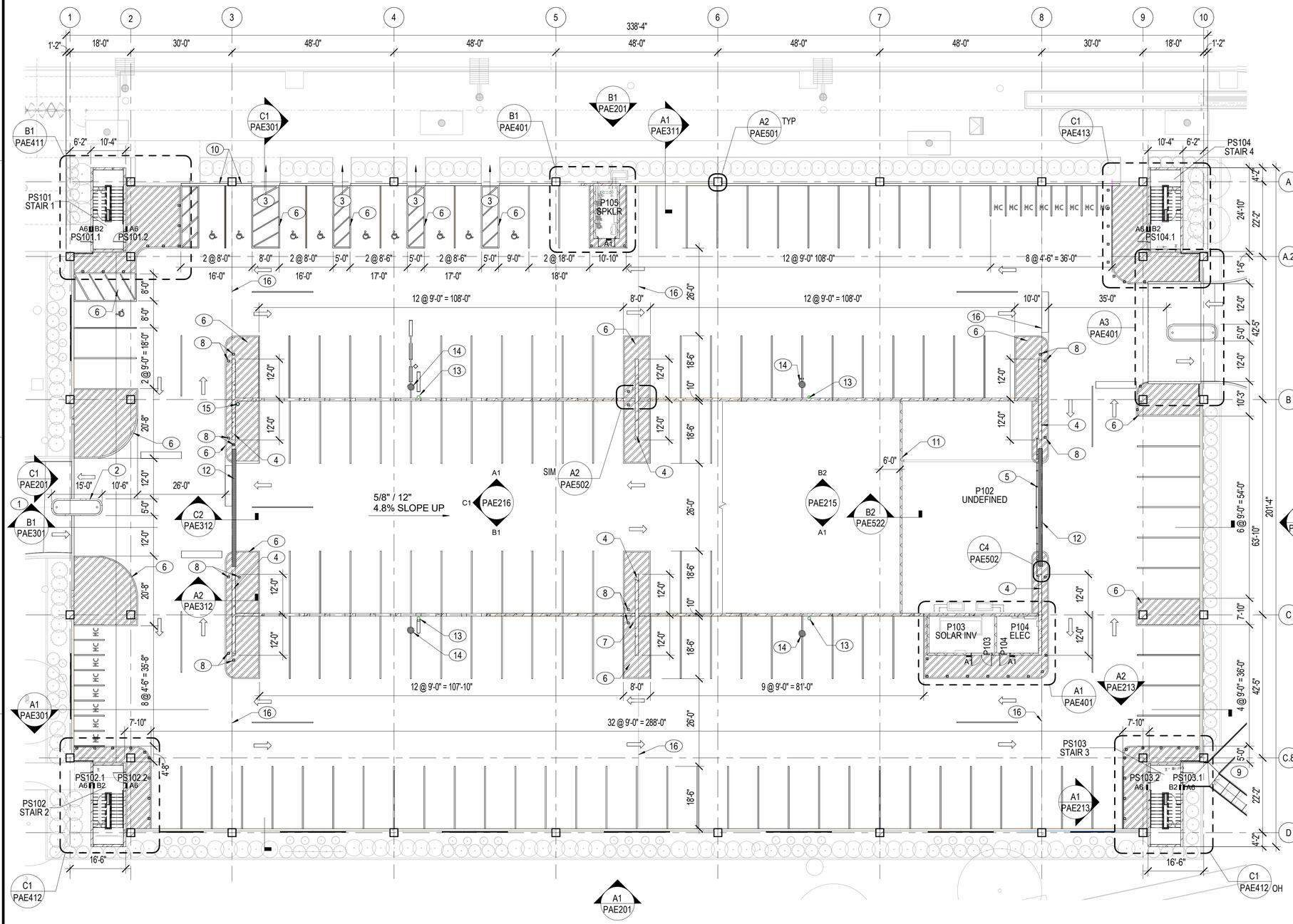

NOTES:

SHEET NOTES:

A REFER TO SHEET PAE001 FOR ARCHITECTURAL ABBREVIATIONS AND SYMBOLS.

B REFER TO VOLUME 1, SHEETS CS101-CS102, CG101-CG102, AND CG105-CG106 FOR CIVIL SITE INFORMATION.

C REFER TO VOLUME 1, SHEETS LP101-LP102, LP401, AND LF101 FOR LANDSCAPE AND LANDSCAPE FURNISHING INFORMATION.

D REFER TO SHEET PGC002 FOR LIFE SAFETY CODE SUMMARY. REFER TO SHEETS PGC101-PAG121 FOR LIFE SAFETY PLANS.

E REFER TO SHEETS PAG101-PAG121 AND PAG710 FOR PARKING GARAGE SIGNAGE AND STRIPING INFORMATION AND DETAILS. REFER TO VOLUME 2A HANGAR FOR ABA INTERIOR ROOM SIGN TYPES.

F PAINT ALL EXPOSED DRAINAGE LINES TO MATCH PRECAST PANELS.

G ARCHITECTURAL EXTERIOR DIMENSIONS ARE TO EXTERIOR FACE OF PRECAST PANEL OR CMU, UNO.

H REFER TO PAE601 PARKING GARAGE - DOOR SCHEDULE / DOOR/DOOR FRAME, CURTAINWALL, AND LOUVER ELEVATIONS / DOOR DETAILS FOR (A6) STAIRWAY SIGN INSTALLATION ELEVATION AND PARKING GARAGE ROOM SIGN MESSAGE SCHEDULE.

I PROVIDE EXTERIOR EXPOSURE CORROSION PROTECTION AND CONTROL IN ACCORDANCE WITH AN ENVIRONMENTAL SEVERITY CLASSIFICATION (ESC) OF C4 FOR BUILDING SYSTEMS AND COMPONENTS IN THE FOLLOWING ROOMS: STAIR 1, STAIR 2, STAIR 3, STAIR 4, P103 SOLAR INV, P104 ELEC, AND P105 SPKLR.

A KEY NOTES (00)

1 MAIN GROUND FLOOR VEHICLE ENTRY/EXIT.

2 CONCRETE ISLAND. REFER TO A3/PAE401 FOR ENLARGED PLAN. REFER TO VOLUME 1, SHEET CS101-CS102 AND A4/CS504 FOR ADDITIONAL INFORMATION.

3 WALKWAY TO HANGAR.

4 SHEAR WALL.

5 8' HIGH GALVANIZED CHAIN LINK FENCE WITH 6' DOUBLE SLIDING GATE OPENING, SPACE POSTS AT 8'-0" OC MAX. REFER TO ADDITIONAL CHAIN-LINK FENCE DETAILS ON PAE553.

6 4" WIDE PAINTED STRIPING. REFER TO SHEET PAG101 FOR ADDITIONAL INFORMATION.

7 DRY STANDPIPE. REFER TO SHEET PFX101 FOR ADDITIONAL INFORMATION. PROVIDE PIPE GUARDS FOR PIPE PROTECTION PER DETAIL B2/PAE553.

8 SURFACE MOUNTED, REMOVABLE, PEDESTAL BOLLARD, TYP. REFER TO DETAIL A2/PAE553.

9 FOR STEPS, RAMP AND HANDRAILS, REFER TO VOLUME 1, SHEET CS102 AND LP102 FOR ADDITIONAL INFORMATION.

10 GUARDRAIL. REFER TO DETAIL D2/PAE421.

11 8" CMU PARTITION. REFER TO SHEET PSF501, DETAIL C2/PSB412, AND DETAIL A1/PAE522 FOR ADDITIONAL INFORMATION.

12 12" LINEAR DRAIN. REFER TO SHEETS PPP101-PPP102 FOR ADDITIONAL INFORMATION.

13 DRAIN FROM ABOVE. PROVIDE STEEL CAGE FOR PIPE PROTECTION PER DETAIL B2/PAE553.

14 FLOOR DRAIN. REFER TO PPP101A-PPP101B FOR ADDITIONAL INFORMATION.

15 10" DRAIN FROM ABOVE. PROVIDE STEEL CAGE FOR PIPE PROTECTION PER DETAIL B2/PAE553.

16 3/4" DOWELED EXPANSION JOINT. REFER TO DETAIL C4/PSB412 FOR ADDITIONAL INFORMATION.

PARKING COUNT

Level	Comments	Count
GROUND FLR	9'-0" x 18'-6"	104
GROUND FLR	9'-0" x 18'-6" - Ramp	48
GROUND FLR	ADA 8'-0" x 18'-6" - 5' Aisle	4
GROUND FLR	ADA 8'-0" x 18'-6" - 8' Aisle	2
GROUND FLR	ADA 9'-0" x 18'-6 - 11' Aisle	1
GROUND FLR	ADA 9'-0" x 18'-6" - 5' Aisle	3
GROUND FLR	MC - 4'-6 x 9'-0"	16
GROUND FLR: 178		
SECOND FLR	9'-0" x 18'-6"	148
SECOND FLR	9'-0" x 18'-6" - Ramp	48
SECOND FLR: 196		
THIRD FLR	9'-0" x 18'-6"	150
THIRD FLR: 150		
Grand total: 524		

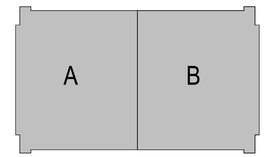

KEYPLAN

0 10' 20' 40' 60'

1/16" = 1'-0" GRAPHIC SCALE

NOTE:
IF THIS DRAWING IS LESS THAN 34" X 22"
IT IS A REDUCED SIZE DRAWING

A1 FLOOR PLAN - GROUND FLOOR - OVERALL

1/16" = 1'-0"

NO	DESCRIPTION	DATE	APPR
1	MOD P00005	05/2023	
2	MOD P00006 AND P00007	10/2025	

NAVFAC

STATE OF FLORIDA
BILLY KEITH HOLLOWAY
AR93022
REGISTERED ARCHITECT
SEAL

BAMFORTH
ENGINEERING ARCHITECTURE
AE INFO

APPROVED
FOR COMMANDER NAVFAC 11/21/2025
ACTIVITY Approved by J. Scott Roberts, Asset Management Branch Head & Supervisory Facility Planner, PWD Beaufort, SC via email.

SATISFACTORY TO DATE	12/15/2022
DES EAD DRW JAF CHK	BKH
PMDM	KTB / RLH
BRANCH MANAGER	CGM
CHIEF ENGARCH	EJA
FP ENGINEER	DSN

NAVAL FACILITIES ENGINEERING SYSTEMS COMMAND - MID-ATLANTIC
NORFOLK, VA

DEPARTMENT OF THE NAVY
NAVAL FACILITIES ENGINEERING SYSTEMS COMMAND
DC CORE
MCAS BEAUFORT

BEAUFORT, SC
P-475 AIRCRAFT MAINTENANCE HANGAR - VOLUME 4 (PARKING GARAGE OPTION)
PARKING GARAGE - FLOOR PLAN - GROUND FLOOR - OVERALL

SCALE:	As indicated
EPROJECT NO.:	1363603
CONSTR. CONTR. NO.	
NAVFAC DRAWING NO.	12860309
SHEET	1088 OF 1412

PAE101

DRAWFORM REVISION 25 AUGUST 2020

Autodesk Docs://20042-MFAT-502-F35 Maintenance Hangar-20042-F35 Maint Hangar_Parking Facility.rvt
11/4/2025 1:11:36 PM

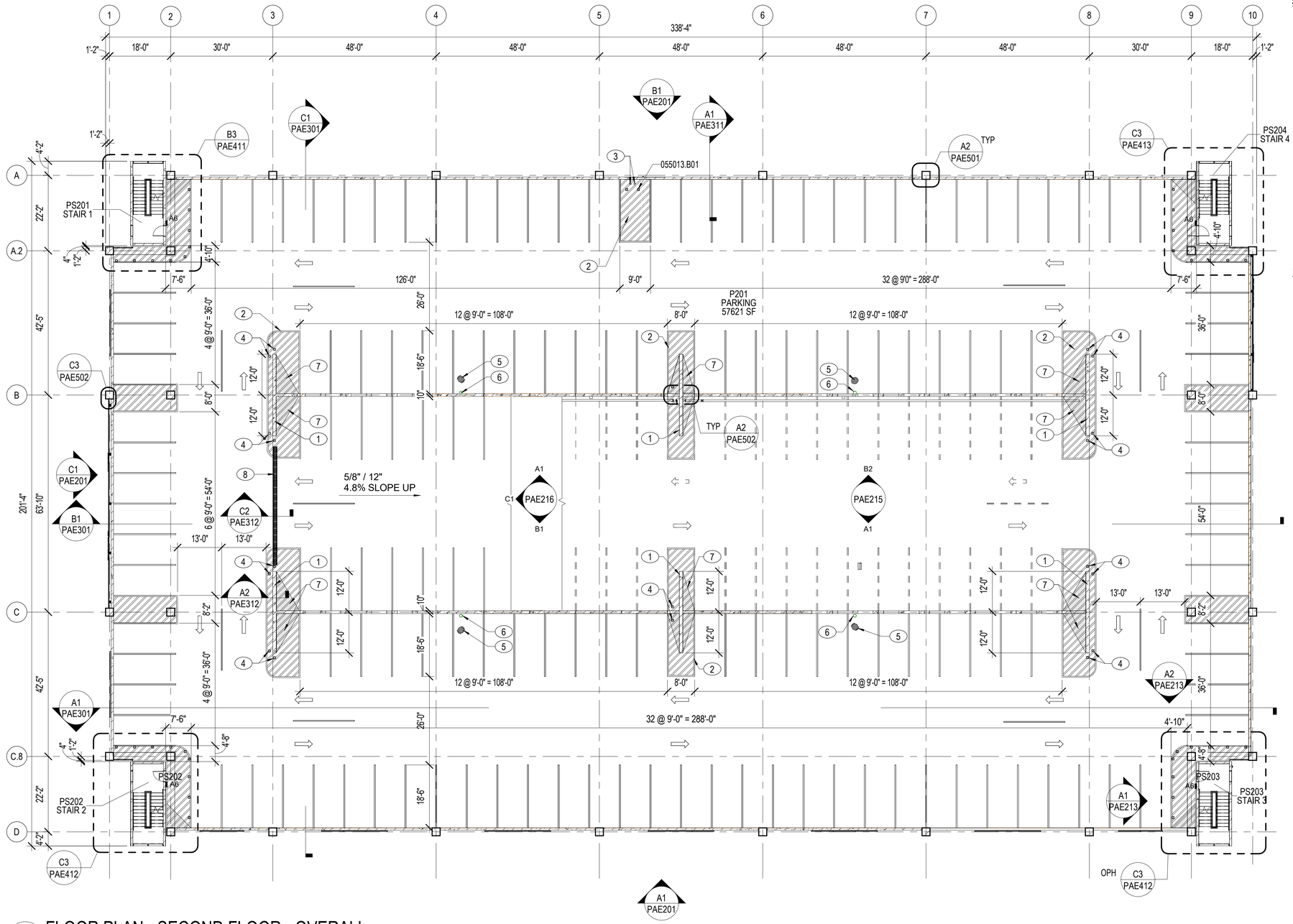

A1 FLOOR PLAN - SECOND FLOOR - OVERALL

1/16" = 1'-0"

NOTES:

SHEET NOTES:

A REFER TO SHEET PAE001 FOR ARCHITECTURAL ABBREVIATIONS AND SYMBOLS.

B REFER TO VOLUME 1, SHEETS CS101-CS102, CG101-CG102, AND CG105-CG106 FOR CIVIL SITE INFORMATION.

C REFER TO VOLUME 1, SHEETS LP101-LP102, LP401, AND LF101 FOR LANDSCAPE AND LANDSCAPE FURNISHING INFORMATION.

D REFER TO SHEET PGC002 FOR LIFE SAFETY CODE SUMMARY. REFER TO SHEETS PGC101-PAG121 FOR LIFE SAFETY PLANS.

E REFER TO SHEETS PAG101-PAG121 AND PAG710 FOR PARKING GARAGE SIGNAGE AND STRIPING INFORMATION AND DETAILS. REFER TO VOLUME 2A HANGAR FOR ABA INTERIOR ROOM SIGN TYPES.

F PAINT ALL EXPOSED DRAINAGE LINES TO MATCH PRECAST PANELS.

G ARCHITECTURAL EXTERIOR DIMENSIONS ARE TO EXTERIOR FACE OF PRECAST PANEL OR CMU, UNO.

H REFER TO PAE601 PARKING GARAGE - DOOR SCHEDULE / DOOR/DOOR FRAME, CURTAINWALL, AND LOUVER ELEVATIONS / DOOR DETAILS FOR (A6) STAIRWAY SIGN INSTALLATION ELEVATION AND PARKING GARAGE ROOM SIGN MESSAGE SCHEDULE.

I PROVIDE EXTERIOR EXPOSURE CORROSION PROTECTION AND CONTROL IN ACCORDANCE WITH AN ENVIRONMENTAL SEVERITY CLASSIFICATION (ESC) OF C4 FOR BUILDING SYSTEMS AND COMPONENTS IN THE FOLLOWING ROOMS: STAIR 1, STAIR 2, STAIR 3, STAIR 4, P103 SOLAR INV, P104 ELEC, AND P105 SPKLR.

KEY NOTES (00)

1 SHEAR WALL.

2 4" WIDE PAINTED STRIPING. REFER TO SHEET PAG111 FOR ADDITIONAL INFORMATION.

3 SPRINKLER SYSTEM PIPING FROM BELOW. REFER TO FIRE PROTECTION DRAWINGS FOR ADDITIONAL INFORMATION.

4 SURFACE MOUNTED, REMOVABLE, PEDESTAL BOLLARD, TYP. REFER TO DETAIL A2/PAE553.

5 FLOOR DRAIN. REFER TO PPP111A-PPP111B FOR ADDITIONAL INFORMATION.

6 10" DRAIN FROM ABOVE. PROVIDE STEEL CAGE FOR PIPE PROTECTION PER DETAIL B2/PAE553.

7 CRICKET IN CONCRETE SLAB TO MOVE WATER AROUND OBSTACLE TO FLOW TOWARDS DRAINS.

8 LINEAR DRAIN. REFER TO PPP111A-PP111B FOR ADDITIONAL INFORMATION.

INTERIOR SIGN TYPES

A1 ROOM IDENTIFICATION WITH PAPER INSERT
A6 STAIR IDENTIFICATION
B2 EXIT SIGN

*REFER TO VOLUME 2A HANGAR FOR ABA INTERIOR ROOM SIGN TYPES.

PARKING COUNT

Level	Comments	Count
GROUND FLR	9'-0" x 18'-6"	104
GROUND FLR	9'-0" x 18'-6" - Ramp	48
GROUND FLR	ADA 8'-0" x 18'-6" - 5' Aisle	4
GROUND FLR	ADA 8'-0" x 18'-6" - 8' Aisle	2
GROUND FLR	ADA 9'-0" x 18'-6 - 11' Aisle	1
GROUND FLR	ADA 9'-0" x 18'-6" - 5' Aisle	3
GROUND FLR	MC - 4'-6 x 9'-0"	16
GROUND FLR: 178		
SECOND FLR	9'-0" x 18'-6"	148
SECOND FLR	9'-0" x 18'-6" - Ramp	48
SECOND FLR: 196		
THIRD FLR	9'-0" x 18'-6"	150
THIRD FLR: 150		
Grand total: 524		

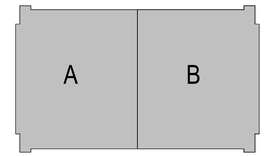

KEYPLAN

PLAN NORTH

N

0 10' 20' 40' 60'

1/16" = 1'-0" GRAPHIC SCALE

NOTE:
IF THIS DRAWING IS LESS THAN 34" X 22"
IT IS A REDUCED SIZE DRAWING

NUM	DESCRIPTION	DATE	APPR
1	MOD P00005	05/2023	
2	MOD P00006 AND P00007	10/2025	

NAVFAC

STATE OF FLORIDA
BILLY KEITH HOLLOWAY
AR93022
REGISTERED ARCHITECT
SEAL

BAMFORTH
ENGINEERING ARCHITECTURE
AE INFO

APPROVED
FOR COMMANDER NAVFAC 11/21/2025
ACTIVITY
Approved by J. Scott Roberts, Asset Management Branch Head & Supervisory Facility Planner, PWD Beaufort, SC via email.
SATISFACTORY TO DATE 12/15/2022
DES EAD DRW JAF CHK BKH
PMDM KTB / RLH
BRANCH MANAGER CGM
CHIEF ENG/ARCH EJA
FP ENGINEER DSN

DEPARTMENT OF THE NAVY
NAVAL FACILITIES ENGINEERING SYSTEMS COMMAND
DC CORE
MCAS BEAUFORT
NAVAL FACILITIES ENGINEERING SYSTEMS COMMAND ~ MID-ATLANTIC
NORFOLK, VA
BEAUFORT, SC
P-475 AIRCRAFT MAINTENANCE HANGAR - VOLUME 4 (PARKING GARAGE OPTION)
PARKING GARAGE - FLOOR PLAN - SECOND FLOOR - OVERALL

SCALE: As indicated
EPROJECT NO.: 1363603
CONSTR. CONTR. NO.
NAVFAC DRAWING NO.: 12860310
SHEET 1089 OF 1412

PAE102

DRAWFORM REVISION: 25 AUGUST 2020

Autodesk Docs://20043 MIFAT 103 F35 Maintenance Hangar/20043 F35 Maint Hangar_Parking Facility.rvt
11/4/2025 1:11:39 PM

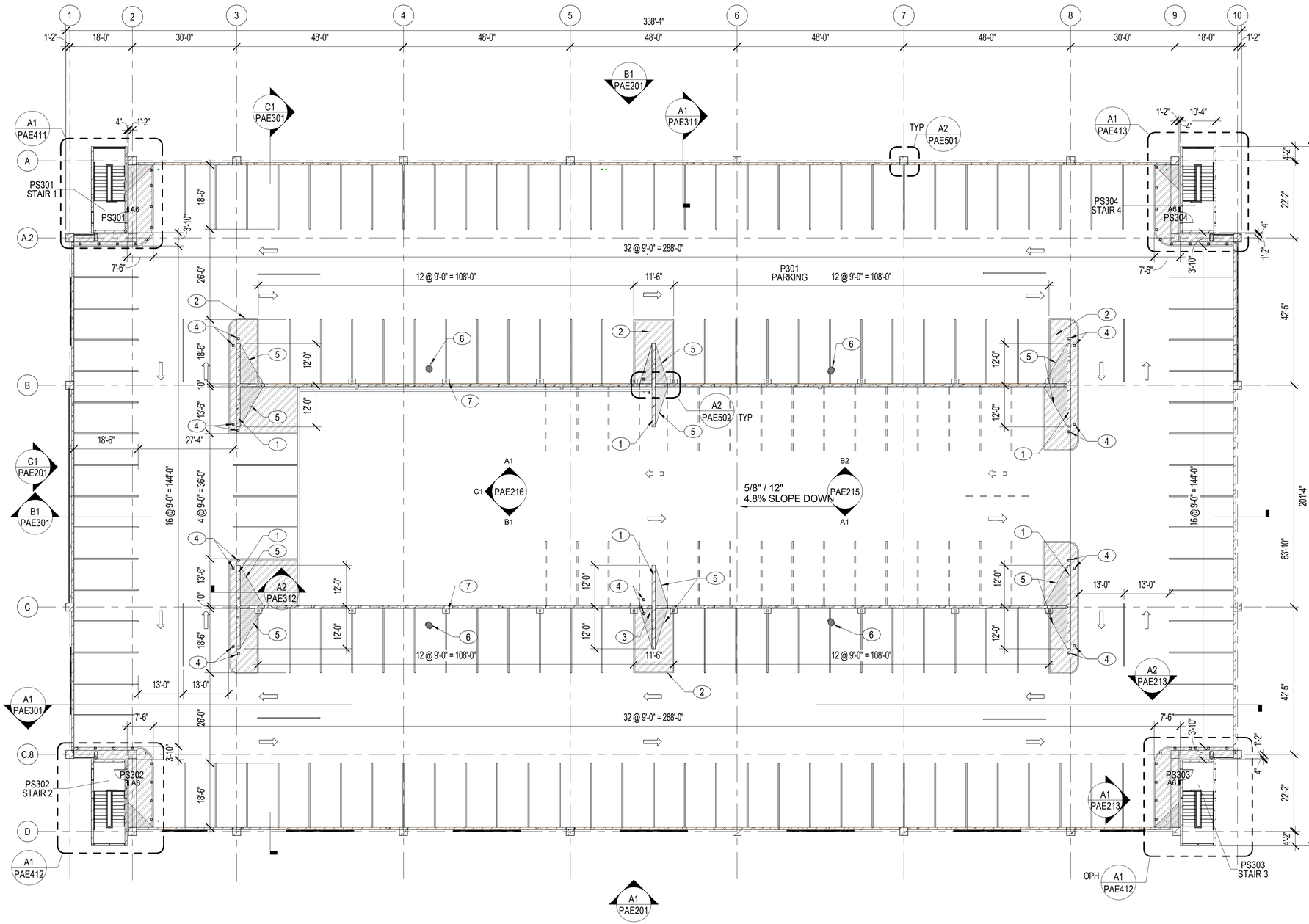

A1 FLOOR PLAN - THIRD FLOOR - OVERALL

1/16" = 1'-0"

NOTES:

SHEET NOTES:

A REFER TO SHEET PAE001 FOR ARCHITECTURAL ABBREVIATIONS AND SYMBOLS.
B REFER TO VOLUME 1, SHEETS CS101-CS102, CG101-CG102, AND CG105-CG106 FOR CIVIL SITE INFORMATION.
C REFER TO VOLUME 1, SHEETS LP101-LP102, LP401, AND LF101 FOR LANDSCAPE AND LANDSCAPE FURNISHING INFORMATION.
D REFER TO SHEET PGC002 FOR LIFE SAFETY CODE SUMMARY. REFER TO SHEETS PGC101-PAG121 FOR LIFE SAFETY PLANS.
E REFER TO SHEETS PAG101-PAG121 AND PAG710 FOR PARKING GARAGE SIGNAGE AND STRIPING INFORMATION AND DETAILS. REFER TO VOLUME 2A HANGAR FOR ABA INTERIOR ROOM SIGN TYPES.
F PAINT ALL EXPOSED DRAINAGE LINES TO MATCH PRECAST PANELS.
G ARCHITECTURAL EXTERIOR DIMENSIONS ARE TO EXTERIOR FACE OF PRECAST PANEL OR CMU, UNO.
H REFER TO PAE601 PARKING GARAGE - DOOR SCHEDULE / DOOR/DOOR FRAME, CURTAINWALL, AND LOUVER ELEVATIONS / DOOR DETAILS FOR (A6) STAIRWAY SIGN INSTALLATION ELEVATION AND PARKING GARAGE ROOM SIGN MESSAGE SCHEDULE.
I PROVIDE EXTERIOR EXPOSURE CORROSION PROTECTION AND CONTROL IN ACCORDANCE WITH AN ENVIRONMENTAL SEVERITY CLASSIFICATION (ESC) OF C4 FOR BUILDING SYSTEMS AND COMPONENTS IN THE FOLLOWING ROOMS: STAIR 1, STAIR 2, STAIR 3, STAIR 4, P103 SOLAR INV, P104 ELEC, AND P105 SPKLR.

KEY NOTES (00)

1 SHEAR WALL.
2 4" WIDE PAINTED STRIPING. REFER TO SHEET PAG121 FOR ADDITIONAL INFORMATION.
3 DRY STANDPIPE. REFER TO SHEET PFX121 FOR ADDITIONAL INFORMATION. PROVIDE PIPE GUARDS FOR PIPE PROTECTION PER DETAIL B2/PAE553.
4 SURFACE MOUNTED, REMOVABLE, PEDESTAL BOLLARD, TYP. REFER TO DETAIL A2/PAE553.
5 CRICKET IN CONCRETE SLAB TO MOVE WATER AROUND OBSTACLE TO FLOW TOWARDS DRAINS.
6 FLOOR DRAIN. REFER TO PPP121A-PPP121B FOR ADDITIONAL INFORMATION.
7 CONCRETE BASE 16"x24"x36" AT EVERY PV STRUCTURE BASE CENTER BAYS ONLY. REFER TO STRUCTURAL DRAWINGS FOR FURTHER INFORMATION.

INTERIOR SIGN TYPES

A1 ROOM IDENTIFICATION WITH PAPER INSERT
A6 STAIR IDENTIFICATION
B2 EXIT SIGN

*REFER TO VOLUME 2A HANGAR FOR ABA INTERIOR ROOM SIGN TYPES.

PARKING COUNT

Level	Comments	Count
GROUND FLR	9'-0" x 18'-6"	104
GROUND FLR	9'-0" x 18'-6" - Ramp	48
GROUND FLR	ADA 8'-0" x 18'-6" - 5' Aisle	4
GROUND FLR	ADA 8'-0" x 18'-6" - 8' Aisle	2
GROUND FLR	ADA 9'-0" x 18'-6 - 11' Aisle	1
GROUND FLR	ADA 9'-0" x 18'-6" - 5' Aisle	3
GROUND FLR	MC - 4'-6 x 9'-0"	16
GROUND FLR: 178		
SECOND FLR	9'-0" x 18'-6"	148
SECOND FLR	9'-0" x 18'-6" - Ramp	48
SECOND FLR: 196		
THIRD FLR	9'-0" x 18'-6"	150
THIRD FLR: 150		
Grand total: 524		

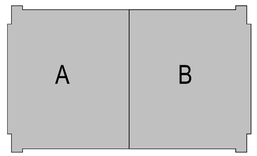

KEYPLAN

PLAN NORTH N

0 10' 20' 40' 60'
1/16" = 1'-0" GRAPHIC SCALE

NOTE:
IF THIS DRAWING IS LESS THAN 34" X 22"
IT IS A REDUCED SIZE DRAWING

APPR	DATE	DESCRIPTION	STM
1	05/2023	MOD P00005	
2	10/2025	MOD P00006 AND P00007	

NAVFAC

STATE OF FLORIDA
BILLY KEITH HOLLOWAY
AR93022
REGISTERED ARCHITECT

BAMFORTH ENGINEERING ARCHITECTURE

AE INFO

APPROVED
FOR COMMANDER NAVFAC 11/6/2025
ACTIVITY
Approved by J. Scott Roberts,
Asset Management Branch Head &
Supervisory Facility Planner, PWD
Beaufort, SC via email.
SATISFACTORY TO DATE 12/15/2022

DES	EAD	DRW JAF	CHK BKH
PM/DM			KTB / RLH
BRANCH MANAGER			CGM
CHIEF ENG/ARCH			EJA
FP ENGINEER			DSN

DEPARTMENT OF THE NAVY
NAVAL FACILITIES ENGINEERING SYSTEMS COMMAND
DC CO/RE
NAVAL FACILITIES ENGINEERING SYSTEMS COMMAND – MID-ATLANTIC
NORFOLK, VA
MCAS BEAUFORT
BEAUFORT, SC
P-475 AIRCRAFT MAINTENANCE HANGAR - VOLUME 4 (PARKING GARAGE OPTION)
PARKING GARAGE - FLOOR PLAN - THIRD FLOOR - OVERALL

SCALE:	As indicated
EPROJECT NO.:	1363603
CONSTR. CONTR. NO.	
NAVFAC DRAWING NO.	12860311
SHEET	1090 OF 1412

PAE103

DRAWFORM REVISION: 25 AUGUST 2020

Autodesk Docs://20043 MWA 502 F39 Maintenance Hangar/20043 F39 Maint Hangar_Parking Facility.rvt
11/4/2025 8:33:05 PM

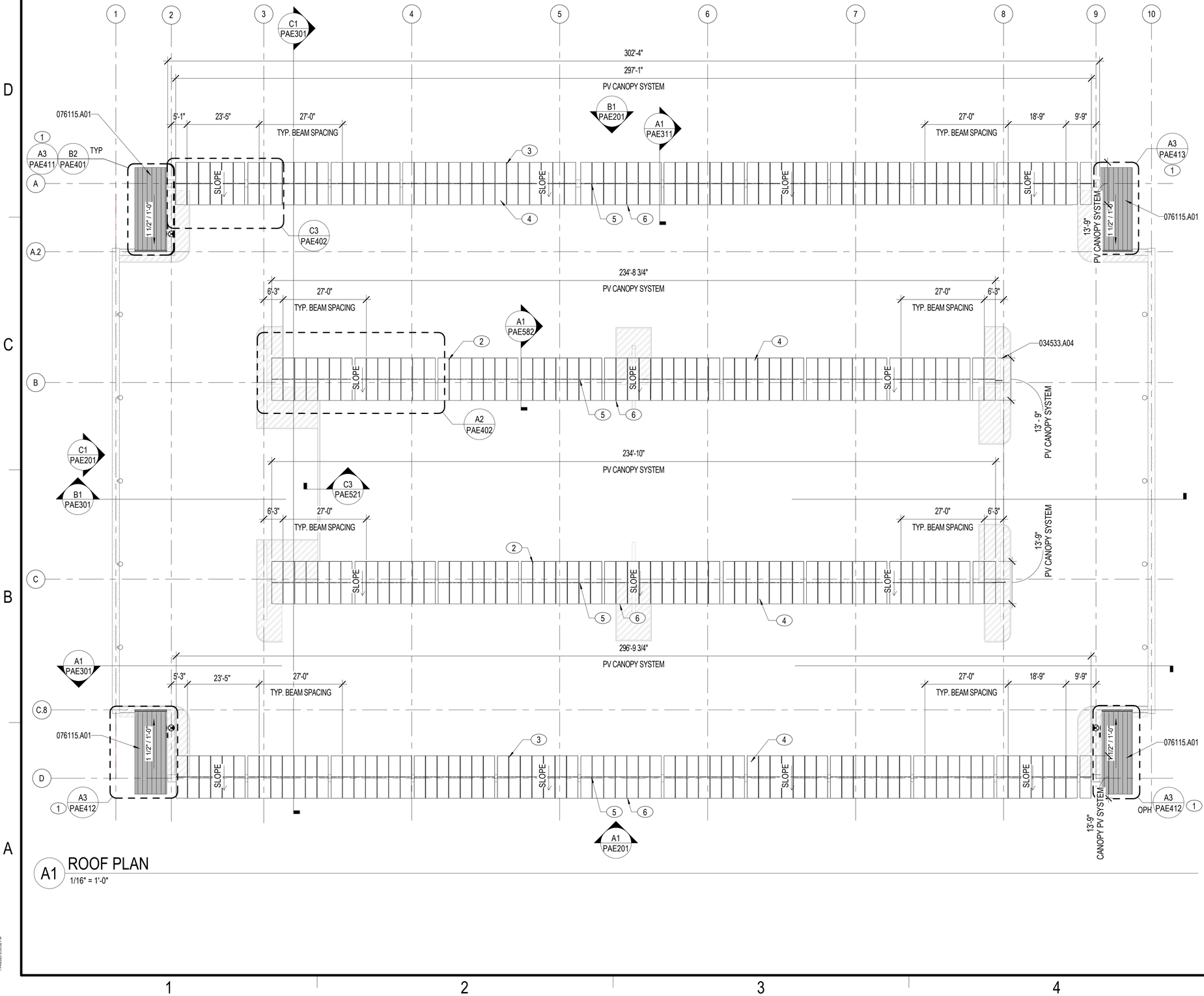

A1 ROOF PLAN

1/16" = 1'-0"

NOTES:

SHEET NOTES:

A REFER TO SHEET PAE001 FOR ARCHITECTURAL ABBREVIATIONS AND SYMBOLS.

B ARCHITECTURAL EXTERIOR DIMENSIONS ARE TO EXTERIOR FACE OF PRECAST PANEL OR CMU, UNO.

C FOR ALL ROOF INSULATION, PROVIDE AN R-VALUE EQUAL TO R-25 MINIMUM CONTINUOUS INSULATION. INSULATION FOR DESIGN PURPOSES IS BASED ON 1" POLYISOCYANURATE INSULATION = R-6.

D SLOPED ROOF COMPOSITION IS AN ALUMINUM STANDING SEAM METAL ROOFING PANEL ON 5/8" GLASS MAT COVER BOARD OVER AND BELOW THE 4" POLYISOCYANURATE RIGID BOARD INSULATION ON METAL DECK. REFER TO SPECIFICATION SECTION 07 61 15. REFER TO STRUCTURAL DRAWINGS FOR DECK INFORMATION.

E REFER TO SHEETS PAE582 FOR PV SUPPORT STRUCTURE DETAILS AND PEP103 FOR PV PANEL INFORMATION.

F ARROWS INDICATE ROOF SLOPE. PROVIDE 1-1/2" PER FOOT MINIMUM SLOPE AT STANDING SEAM METAL ROOF.

G PROVIDE EXTERIOR EXPOSURE CORROSION PROTECTION AND CONTROL IN ACCORDANCE WITH AN ENVIRONMENTAL SEVERITY CLASSIFICATION (ESC) OF C4 FOR BUILDING SYSTEMS AND COMPONENTS IN THE FOLLOWING ROOMS: STAIR 1, STAIR 2, STAIR 3, STAIR 4, AND PV CANOPY.

KEY NOTES (00)

1 VIEW ON SHEET DOES NOT INCLUDE ROOF.

2 ALUMINUM CANOPY SYSTEM WITH INTEGRAL DRAINAGE FOR PHOTOVOLTAIC PANEL. PROVIDE IF PARKING GARAGE PV PANEL OPTION IS AWARDED. REFER TO DETAIL A1/PAE582. REFER TO ELECTRICAL DRAWINGS PEP103A-PEP103B FOR PHOTOVOLTAIC PANEL SYSTEM INFORMATION.

3 ALUMINUM CANOPY SYSTEM WITH INTEGRAL DRAINAGE FOR PHOTOVOLTAIC PANEL. PROVIDE IF PARKING GARAGE PV PANEL OPTION IS AWARDED. REFER TO DETAIL A3/PAE582. REFER TO ELECTRICAL DRAWINGS PEP103A-PEP103B FOR PHOTOVOLTAIC PANEL SYSTEM INFORMATION.

4 PHOTOVOLTAIC PANEL SYSTEM. PROVIDE IF PARKING GARAGE PV PANEL OPTION IS AWARDED. REFER TO SHEET PEP103 FOR ADDITIONAL INFORMATION.

5 PAD-STYLE SNOW GUARD, 6" WIDE, 2 PER PANEL, IMPLEMENTED BETWEEN PV PANELS IN THE HORIZONTAL JOINT UPSLOPE IN THE ARRAY.

6 FENCE-STYLE SNOW SYSTEM, 2" HIGH, INSTALLED AT THE LOWEST EDGE OF THE SOLAR ARRAY.

MATERIAL NOTES

034533.A04 PRECAST/PRESTRESSED CONCRETE WALL PANEL

076115.A01 STANDING-SEAM METAL ROOF PANEL

***BASE BID / BID OPTION NOTE:**
IF REFERENCED OPTIONS ARE NOT SELECTED, REFER TO VOLUME 6 DRAWINGS FOR BASE BID ONLY INFORMATION.

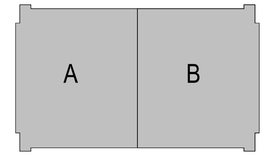

KEYPLAN

PLAN NORTH

0 10' 20' 40' 60'

1/16" = 1'-0" GRAPHIC SCALE

NOTE:
IF THIS DRAWING IS LESS THAN 34" X 22"
IT IS A REDUCED SIZE DRAWING

NO	DESCRIPTION	DATE	APPR
1	MOD P00005	05/2023	
2	MOD P00006 AND P00007	10/2025	

NAVFAC

STATE OF FLORIDA
BILLY KEITH HOLLOWAY
AR93022
REGISTERED ARCHITECT
SEAL

BAMFORTH ENGINEERING ARCHITECTURE

AE INFO

APPROVED
FOR COMMANDER NAVFAC

ACTIVITY
Approved by J. Scott Roberts,
Asset Management Branch Head &
Supervisory Facility Planner, PWD
Beaufort, SC via email.

SATISFACTORY TO DATE 12/15/2022

DES	EAD	DRW	JAF	CHK	BKH

PM/DM	KTB / RLH
BRANCH MANAGER	CGM
CHIEF ENG/ARCH	EJA
FP ENGINEER	DSN

DEPARTMENT OF THE NAVY
NAVAL FACILITIES ENGINEERING SYSTEMS COMMAND
DC CODE:
MCAS BEAUFORT

NAVAL FACILITIES ENGINEERING SYSTEMS COMMAND – MID-ATLANTIC
NORFOLK, VA

BEAUFORT, SC

P-475 AIRCRAFT MAINTENANCE HANGAR - VOLUME 4 (PARKING GARAGE OPTION)

PARKING GARAGE - ROOF PLAN - OVERALL

SCALE:	As indicated
EPROJECT NO.:	1363603
CONSTR. CONTR. NO.	
NAVFAC DRAWING NO.	12860312
SHEET	1091 OF 1412

PAE104

DRAWFORM REVISION 26 AUGUST 2020

Autodesk Docs://20043 MVAX 500 755 Maintenance Hangar/20043 755 Maint Hangar_Parking Facility.rvt
11/4/2025 8:33:52 PM

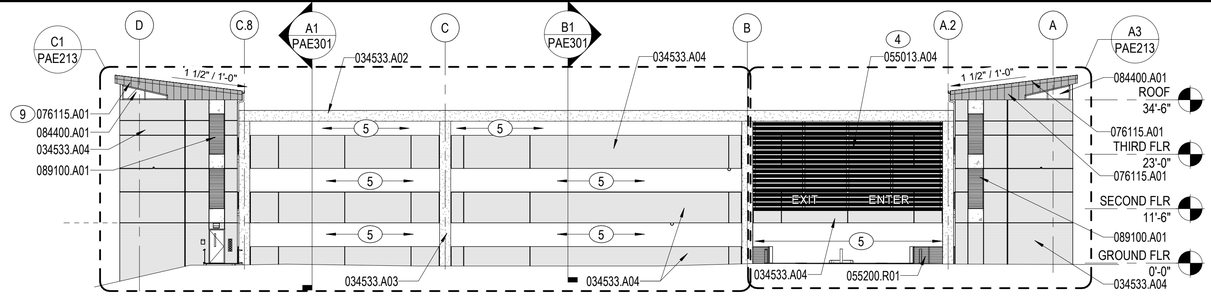

D1 EAST ELEVATION

1/16" = 1'-0"

PAE101, PAE102, PAE103, PAE104

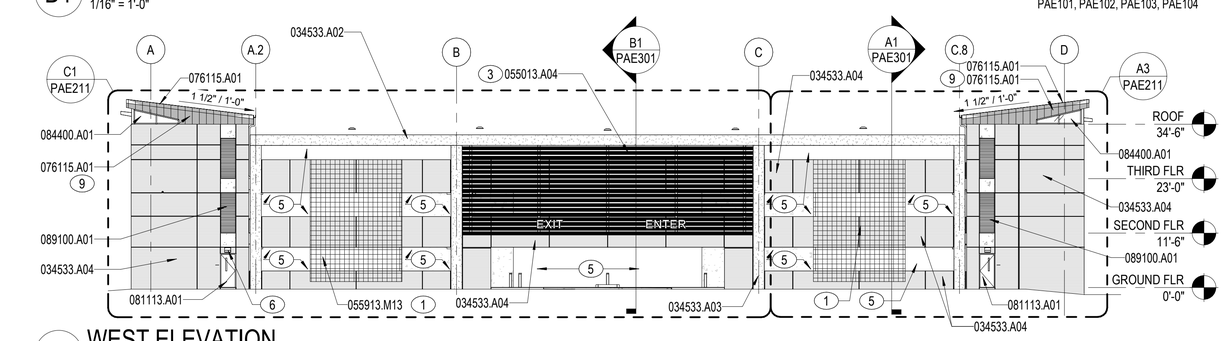

C1 WEST ELEVATION

1/16" = 1'-0"

PAE101, PAE102, PAE103, PAE104

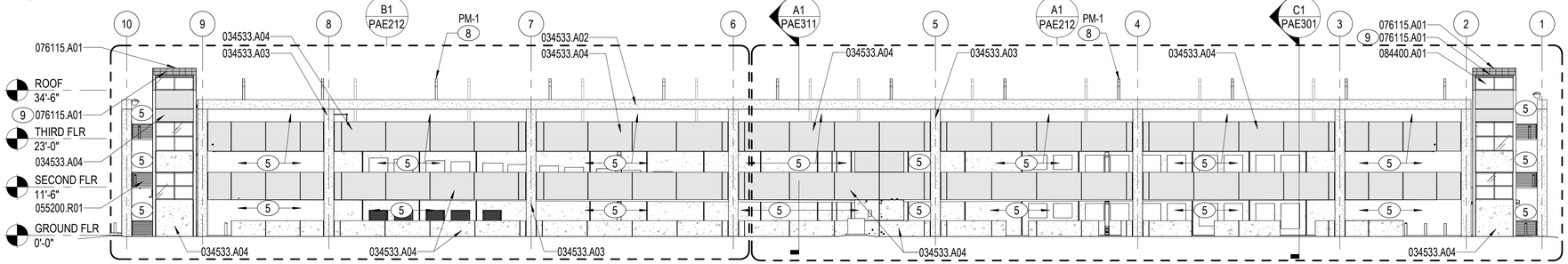

B1 NORTH ELEVATION

1/16" = 1'-0"

PAE101, PAE102, PAE103, PAE104

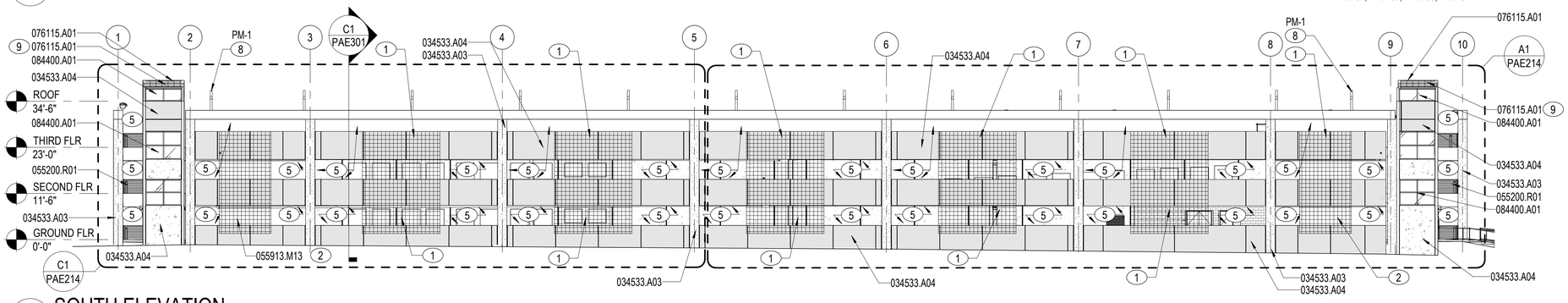

A1 SOUTH ELEVATION

1/16" = 1'-0"

PAE101, PAE102, PAE103, PAE104

0 10' 20' 40' 60'

1/16" = 1'-0" GRAPHIC SCALE

NOTE:
IF THIS DRAWING IS LESS THAN 34" X 22"
IT IS A REDUCED SIZE DRAWING

MATERIAL NOTES

034533.A02	PRECAST/PRESTRESSED CONCRETE BEAM
034533.A03	PRECAST/PRESTRESSED CONCRETE COLUMN
034533.A04	PRECAST/PRESTRESSED CONCRETE WALL PANEL
055013.A04	EXTRUDED ALUMINUM TUBE
055200.R01	STEEL GUARDRAIL
055913.M13	EXTERIOR TRELLIS
076115.A01	STANDING-SEAM METAL ROOF PANEL
081113.A01	STEEL DOOR
084400.A01	GLAZED ALUMINUM CURTAIN WALL ASSEMBLY
089100.A01	EXTRUDED ALUMINUM WALL LOUVER

NOTES:

SHEET NOTES:

A REFER TO SHEET PAE001 FOR ARCHITECTURAL ABBREVIATIONS AND SYMBOLS.

B ARCHITECTURAL ELEVATION FOR GROUND FLOOR TOP OF SLAB IS DEFINED AS 0'-0". REFER TO VOLUME 1, SHEETS CG101-CG102 FOR SLAB ELEVATIONS RELATIVE TO NORTH AMERICAN VERTICAL DATUM (NAVD) SYSTEM.

C PROVIDE 1-1/2" PER FOOT MINIMUM SLOPE AT STANDING SEAM METAL ROOF.

D REFER TO SHEETS PAE211-PAE216 FOR ENLARGED ELEVATIONS AND PAE221-PAE229 FOR PRECAST PANEL ELEVATIONS.

E REFER TO SHEETS PAG101-PAG221 AND PAG701-PAG707 FOR SIGNAGE LOCATIONS AND ELEVATIONS.

G REFER TO SHEET PAE104Z FOR PLAN WITHOUT THE PHOTOVOLTAIC (PV) OPTION.

KEY NOTES (00)

1 WELDED WIRE PANEL PLANT SYSTEM, CENTER BETWEEN COLUMNS. REFER TO DETAIL C2/PAE552 AND SHEET PAE552 FOR SECTION DETAIL.

2 WELDED WIRE PANEL PLANT SYSTEM, CENTER BETWEEN COLUMNS. REFER TO DETAIL A3/PAE552 AND SHEET PAE552 FOR SECTION DETAIL.

3 SCREEN / VISION BARRIER WITH SIGNAGE LETTERS. REFER TO A2/PAE551 FOR EAST ENTRANCE SCREEN ELEVATION AND PAE551 FOR TYPICAL SECTION AND DETAILS.

4 SCREEN / VISION BARRIER WITH SIGNAGE LETTERS. REFER TO C2/PAE551 FOR EAST ENTRANCE SCREEN ELEVATION AND PAE551 FOR TYPICAL SECTION AND DETAILS.

5 OPEN.

6 TYPICAL LIGHT FIXTURE. REFER TO PEL101-PEL103 FOR ADDITIONAL INFORMATION.

8 ALUMINUM STEEL CANOPY SYSTEM WITH INTEGRAL DRAINAGE FOR PHOTOVOLTAIC PANEL. PROVIDE IF PARKING GARAGE PV PANEL OPTION IS AWARDED. REFER TO DETAIL A3/PAE582. REFER TO ELECTRICAL DRAWINGS PEP103A-PEP103B FOR PHOTOVOLTAIC PANEL SYSTEM INFORMATION.

9 STANDING SEAM METAL ROOF PANEL IN VERTICAL APPLICATION.

MK	DESCRIPTION	DATE	APPR
1	MOD P00005	05/2023	
2	MOD P00006 AND P00007	10/2025	

NAVFAC

STATE OF FLORIDA
BILLY KEITH HOLLOWAY
AR93022
REGISTERED ARCHITECT
SEAL

BAMFORTH
ENGINEERING ARCHITECTURE

AE INFO

APPROVED

FOR COMMANDER NAVFAC

ACTIVITY
Approved by J. Scott Roberts,
Asset Management Branch Head &
Supervisory Facility Planner, PWD
Beaufort, SC via email.

SATISFACTORY TO DATE 12/15/2022

DES	EAD	DRW	JAF	CHK	BKH

PM/DM	KTB / RLH
BRANCH MANAGER	CGM
CHIEF ENG/ARCH	EJA
FP ENGINEER	DSN

DEPARTMENT OF THE NAVY
NAVAL FACILITIES ENGINEERING SYSTEMS COMMAND
DC CORE
MCAS BEAUFORT

NAVAL FACILITIES ENGINEERING SYSTEMS COMMAND – MID-ATLANTIC
NORFOLK, VA

BEAUFORT, SC

P-475 AIRCRAFT MAINTENANCE HANGAR - VOLUME 4 (PARKING GARAGE OPTION)

PARKING GARAGE - BUILDING ELEVATIONS

SCALE:	1/16" = 1'-0"
EPROJECT NO.:	1363603
CONSTR. CONTR. NO.	
NAVFAC DRAWING NO.	12860313
SHEET	1092 OF 1412

PAE201

BAMFORTH REVISION 26 AUGUST 2020

Autodesk Docs://20043 MRAT 502 755 Maintenance Hangar/20042 TS5 Maint Hangar_Parking Facility.rvt
11/4/2025 8:33:58 PM

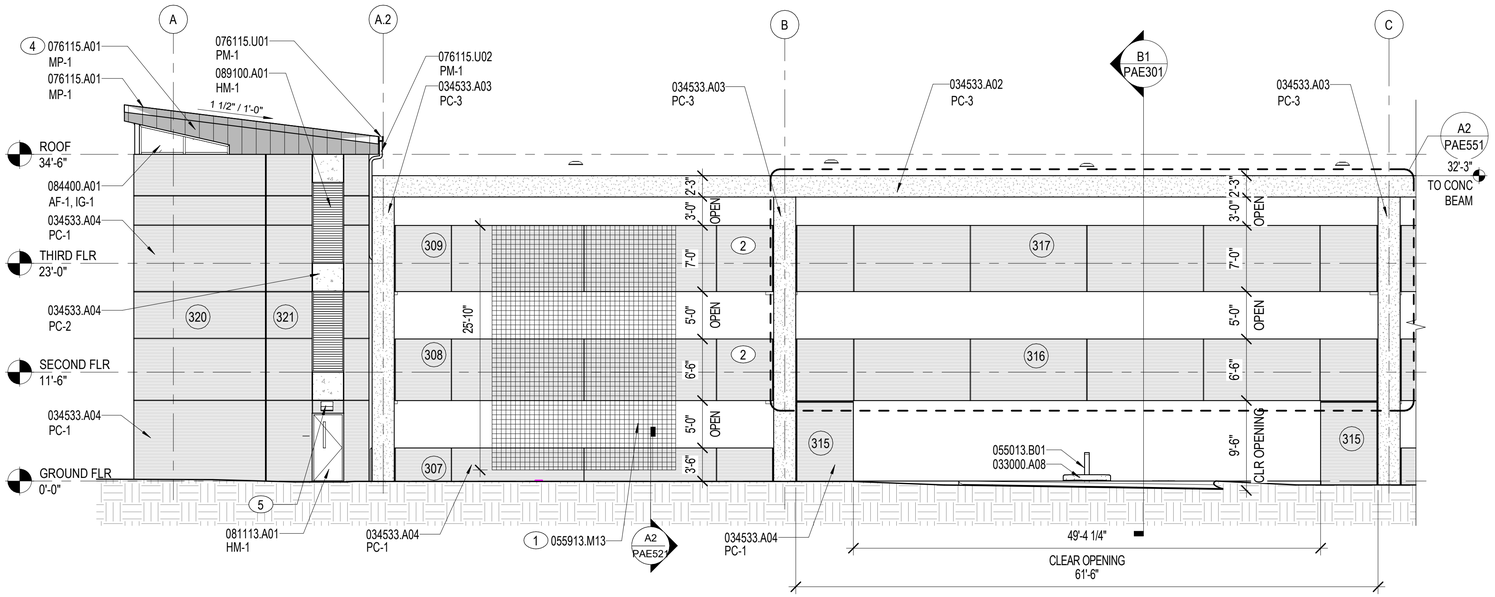

C1 PARTIAL ELEVATION - WEST

1/8" = 1'-0"

PAE201

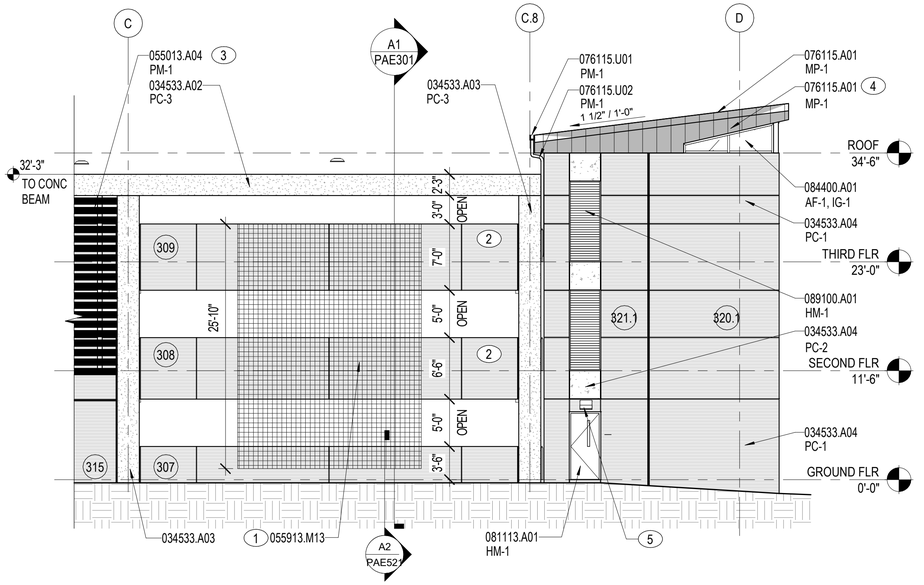

A3 PARTIAL ELEVATION - WEST

1/8" = 1'-0"

PAE201

NOTES:

SHEET NOTES:

A REFER TO SHEET PAE001 FOR ARCHITECTURAL ABBREVIATIONS AND SYMBOLS.

B ARCHITECTURAL ELEVATION FOR GROUND FLOOR TOP OF SLAB IS DEFINED AS 0'-0". REFER TO VOLUME 1, SHEETS CG101-CG102 FOR SLAB ELEVATIONS RELATIVE TO NORTH AMERICAN VERTICAL DATUM (NAVD) SYSTEM.

C WHERE COLOR IS SHOWN AS BEING SPECIFIC TO ONE MANUFACTURER, AN EQUIVALENT COLOR BY ANOTHER MANUFACTURER MAY BE SUBMITTED FOR APPROVAL. MANUFACTURERS AND MATERIALS SPECIFIED ARE NOT INTENDED TO LIMIT THE SELECTION OF EQUAL COLORS FROM OTHER MANUFACTURERS.

D PROVIDE 1-1/2" PER FOOT MINIMUM SLOPE AT STANDING SEAM METAL ROOF.

E REFER TO SHEETS PAE221-PAE229 FOR PRECAST PANEL ELEVATIONS.

F REFER TO SHEETS PAG101-PAG221 AND PAG701-PAG707 FOR SIGNAGE LOCATIONS AND ELEVATIONS.

G REFER TO SHEET PAE104Z FOR PLAN WITHOUT THE PHOTOVOLTAIC (PV) OPTION.

KEY NOTES (00)

1 WELDED WIRE PANEL PLANT SYSTEM, CENTER BETWEEN COLUMNS. REFER TO SHEET PAE552 FOR ADDITIONAL INFORMATION.

2 PRECAST GRADE SPANDREL.

3 SCREEN / VISION BARRIER WITH SIGNAGE LETTERS. REFER TO SHEET PAE551 FOR ADDITIONAL INFORMATION.

4 STANDING SEAM METAL ROOF PANEL IN VERTICAL APPLICATION.

5 LIGHT FIXTURE. REFER TO SHEETS PEL101 FOR ADDITIONAL INFORMATION.

MATERIAL NOTES

033000.A08	CONCRETE CURB
034533.A02	PRECAST/PRESTRESSED CONCRETE BEAM
034533.A03	PRECAST/PRESTRESSED CONCRETE COLUMN
034533.A04	PRECAST/PRESTRESSED CONCRETE WALL PANEL
055013.A04	EXTRUDED ALUMINUM TUBE
055013.B01	STEEL BOLLARD
055913.M13	EXTERIOR TRELLIS
076115.A01	STANDING-SEAM METAL ROOF PANEL
076115.U01	GUTTER
076115.U02	DOWNSPOUT
081113.A01	STEEL DOOR
084400.A01	GLAZED ALUMINUM CURTAIN WALL ASSEMBLY
089100.A01	EXTRUDED ALUMINUM WALL LOUVER

EXTERIOR FINISH LEGEND

PC-1	ARCHITECTURAL PRECAST CONCRETE SANDBLAST LIGHT - PCI 110	
PC-2	ARCHITECTURAL PRECAST CONCRETE SANDBLAST MEDIUM - PCI 110	
PC-3	ARCHITECTURAL PRECAST CONCRETE SANDBLAST LIGHT - PCI 141	
MP-1	STANDING SEAM METAL PANEL KINGSPAN SLR DARK BRONZE	
IG-1	INSULATED LAMINATED VISION GLASS VITRO SOLARBRONZE	

ADDITIONAL FINISHES:

PM-1	PREFINISHED METAL KINGSPAN SLR DARK BRONZE
AF-1	CURTAINWALL / ALUMINUM WINDOW FRAME / ALUMINUM DOOR FRAME KINGSPAN SLR DARK BRONZE
HM-1	HM DOOR / HM DOOR FRAME / LOUVER / LOUVER FRAME SW 6072 VERSATILE GRAY

0 5' 10' 20' 30'

1/8" = 1'-0" GRAPHIC SCALE

NOTE:
IF THIS DRAWING IS LESS THAN 34" X 22"
IT IS A REDUCED SIZE DRAWING

NO	DESCRIPTION	DATE	APPR
1	MOD P00005	05/2023	
2	MOD P00006 AND P00007	10/2025	

NAVFAC

STATE OF FLORIDA
BILLY KEITH HOLLOWAY
AR93022
REGISTERED ARCHITECT
SEAL

BAMFORTH
ENGINEERING ARCHITECTURE
AE INFO

APPROVED
FOR COMMANDER NAVFAC 11/26/2025
ACTIVITY Approved by J. Scott Roberts, Asset Management Branch Head & Supervisory Facility Planner, PWD Beaufort, SC via email.
SATISFACTORY TO DATE 12/15/2022

DES	EAD	DRW	JAF	CHK	BKH
PM/DM					KTB / RLH
BRANCH MANAGER					CGM
CHIEF ENG/ARCH					EJA
FP ENGINEER					DSN

DEPARTMENT OF THE NAVY
NAVAL FACILITIES ENGINEERING SYSTEMS COMMAND
DC CORE
MCAS BEAUFORT

NAVAL FACILITIES ENGINEERING SYSTEMS COMMAND - MID-ATLANTIC NORFOLK, VA

P-475 AIRCRAFT MAINTENANCE HANGAR - BEAUFORT, SC
VOLUME 4 (PARKING GARAGE OPTION)
PARKING GARAGE - ENLARGED ELEVATIONS

SCALE:	1/8" = 1'-0"
EPROJECT NO.:	1363603
CONSTR. CONTR. NO.	
NAVFAC DRAWING NO.	12860314
SHEET	1093 OF 1412

PAE211

DRAWFORM REVISION: 25 AUGUST 2020

Autodesk Docs://20042 MAFA 1 503 735 Maintenance Hangar/20042 735 Maint Hangar - Parking Facility.rvt
11/4/2025 3:14:05 PM

MATERIAL NOTES

034533.A02	PRECAST/PRESTRESSED CONCRETE BEAM
034533.A03	PRECAST/PRESTRESSED CONCRETE COLUMN
034533.A04	PRECAST/PRESTRESSED CONCRETE WALL PANEL
055013.B01	STEEL BOLLARD
055200.R01	STEEL GUARDRAIL
076115.A01	STANDING-SEAM METAL ROOF PANEL
084400.A01	GLAZED ALUMINUM CURTAIN WALL ASSEMBLY

KEY NOTES (00)

1 ALUMINUM CANOPY SYSTEM WITH INTEGRAL DRAINAGE FOR PHOTOVOLTAIC PANEL. PROVIDE IF PARKING GARAGE PV PANEL OPTION IS AWARDED. REFER TO DETAIL A3/PAE582. REFER TO ELECTRICAL DRAWINGS PEP103A-PEP103B FOR PHOTOVOLTAIC PANEL SYSTEM INFORMATION.
2 PRECAST GRADE SPANDREL.
3 OPEN.
4 STANDING SEAM METAL ROOF PANEL IN VERTICAL APPLICATION.

NOTES:

SHEET NOTES:

A REFER TO SHEET PAE001 FOR ARCHITECTURAL ABBREVIATIONS AND SYMBOLS.
B ARCHITECTURAL ELEVATION FOR GROUND FLOOR TOP OF SLAB IS DEFINED AS 0'-0". REFER TO VOLUME 1, SHEETS CG101-CG102 FOR SLAB ELEVATIONS RELATIVE TO NORTH AMERICAN VERTICAL DATUM (NAVD) SYSTEM.
C WHERE COLOR IS SHOWN AS BEING SPECIFIC TO ONE MANUFACTURER, AN EQUIVALENT COLOR BY ANOTHER MANUFACTURER MAY BE SUBMITTED FOR APPROVAL. MANUFACTURERS AND MATERIALS SPECIFIED ARE NOT INTENDED TO LIMIT THE SELECTION OF EQUAL COLORS FROM OTHER MANUFACTURERS.
D PROVIDE 1-1/2" PER FOOT MINIMUM SLOPE AT STANDING SEAM METAL ROOF.
E REFER TO SHEETS PAE221-PAE229 FOR PRECAST PANEL ELEVATIONS.
F REFER TO SHEETS PAG101-PAG221 AND PAG701-PAG707 FOR SIGNAGE LOCATIONS AND ELEVATIONS.
G REFER TO SHEET PAE104Z FOR PLAN WITHOUT THE PHOTOVOLTAIC (PV) OPTION.

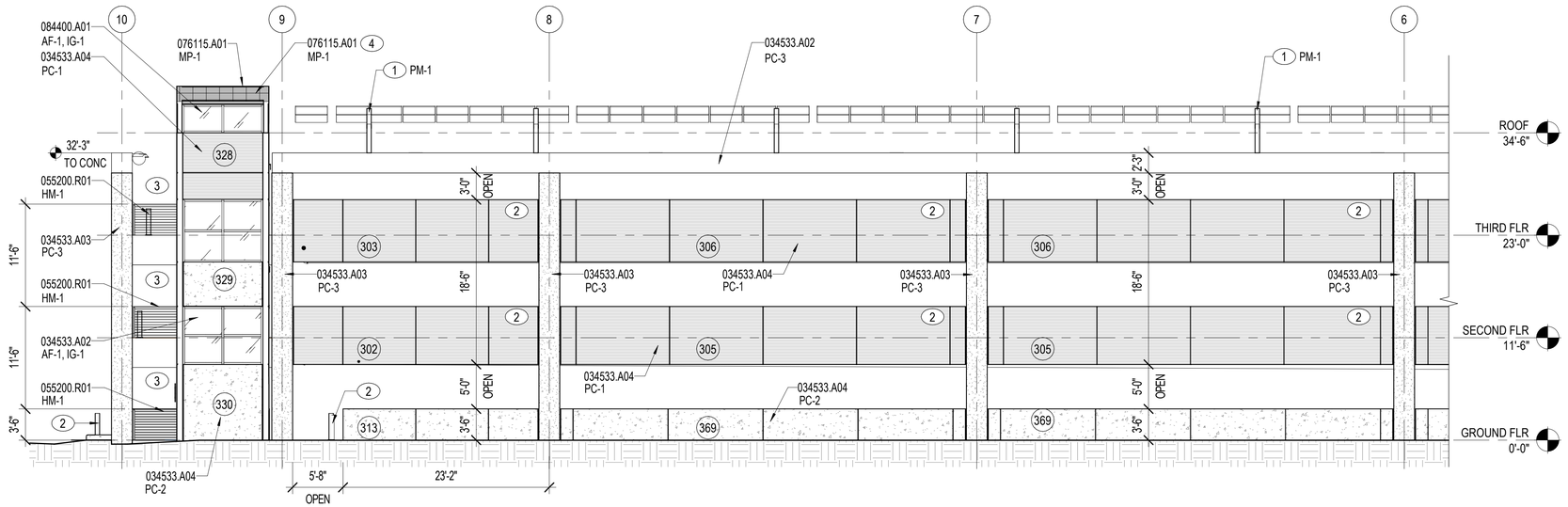

B1 PARTIAL ELEVATION - NORTH
1/8" = 1'-0"

PAE211

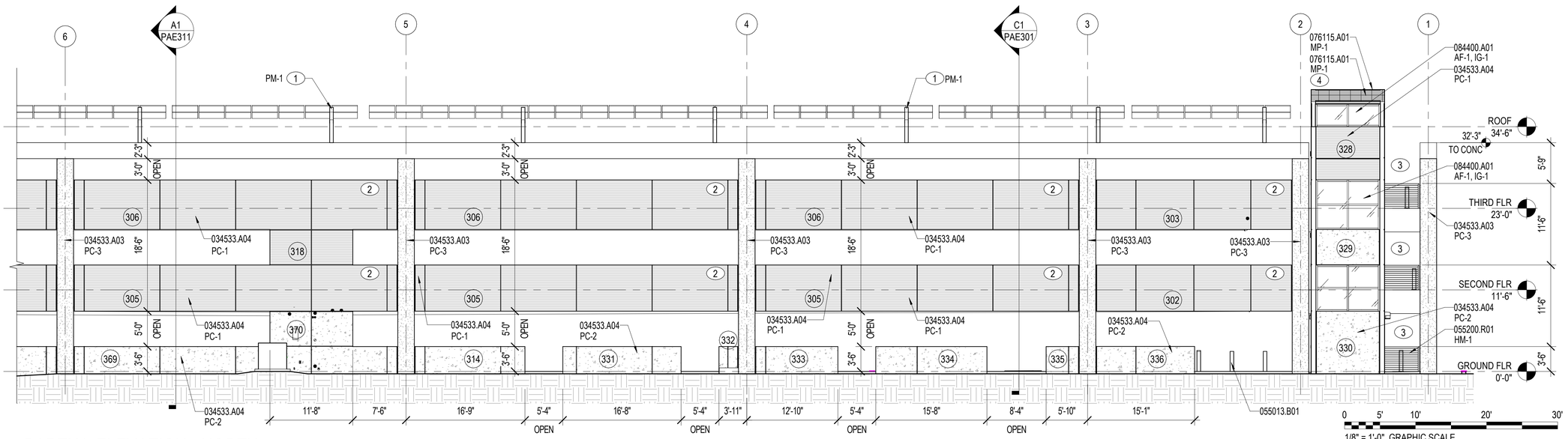

A1 PARTIAL ELEVATION - NORTH
1/8" = 1'-0"

PAE201

NOTE:
IF THIS DRAWING IS LESS THAN 34" X 22"
IT IS A REDUCED SIZE DRAWING

EXTERIOR FINISH LEGEND

PC-1	ARCHITECTURAL PRECAST CONCRETE SANDBLAST LIGHT - PCI 110	
PC-2	ARCHITECTURAL PRECAST CONCRETE SANDBLAST MEDIUM - PCI 110	
PC-3	ARCHITECTURAL PRECAST CONCRETE SANDBLAST LIGHT - PCI 141	
MP-1	STANDING SEAM METAL PANEL KINGSPAN SLR DARK BRONZE	
IG-1	INSULATED LAMINATED VISION GLASS VITRO SOLARBRONZE	

ADDITIONAL FINISHES:

PM-1	PREFINISHED METAL KINGSPAN SLR DARK BRONZE
AF-1	CURTAINWALL / ALUMINUM WINDOW FRAME / ALUMINUM DOOR FRAME KINGSPAN SLR DARK BRONZE
HM-1	HM DOOR / HM DOOR FRAME / LOUVER / LOUVER FRAME SW 6072 VERSATILE GRAY

NO	DATE	DESCRIPTION	APPR
1	05/2023	MOD P00005	
2	10/2025	MOD P00006 AND P00007	

NAVFAC

STATE OF FLORIDA
BILLY KEITH HOLLOWAY
AR93022
REGISTERED ARCHITECT
SEAL

BAMFORTH
ENGINEERING ARCHITECTURE
AE INFO

APPROVED
FOR COMMANDER NAVFAC 11/21/2025

ACTIVITY Approved by J. Scott Roberts, Asset Management Branch Head & Supervisory Facility Planner, PWD Beaufort, SC via email.

SATISFACTORY TO DATE	12/15/2022
DES EAD	DRW JAF CHK BKH
PMDM	KTB / RLH
BRANCH MANAGER	CGM
CHIEF ENG/ARCH	EJA
FP ENGINEER	DSN

DEPARTMENT OF THE NAVY
NAVAL FACILITIES ENGINEERING SYSTEMS COMMAND
DC CORE
NAVAL FACILITIES ENGINEERING SYSTEMS COMMAND - MID-ATLANTIC NORFOLK, VA
MCAS BEAUFORT BEAUFORT, SC
P-475 AIRCRAFT MAINTENANCE HANGAR - VOLUME 4 (PARKING GARAGE OPTION)
PARKING GARAGE - ENLARGED ELEVATIONS

SCALE:	1/8" = 1'-0"
EPROJECT NO.:	1363603
CONSTR. CONTR. NO.	
NAVFAC DRAWING NO.	12860315
SHEET	1094 OF 1412

PAE212

DRAWFORM REVISION 25 AUGUST 2020

Autodesk Docs://20042 MAFA1 505 735 Maintenance Hangar/20042 735 Maint Hangar - Parking Facility.rvt
11/4/2025 3:14:03 PM

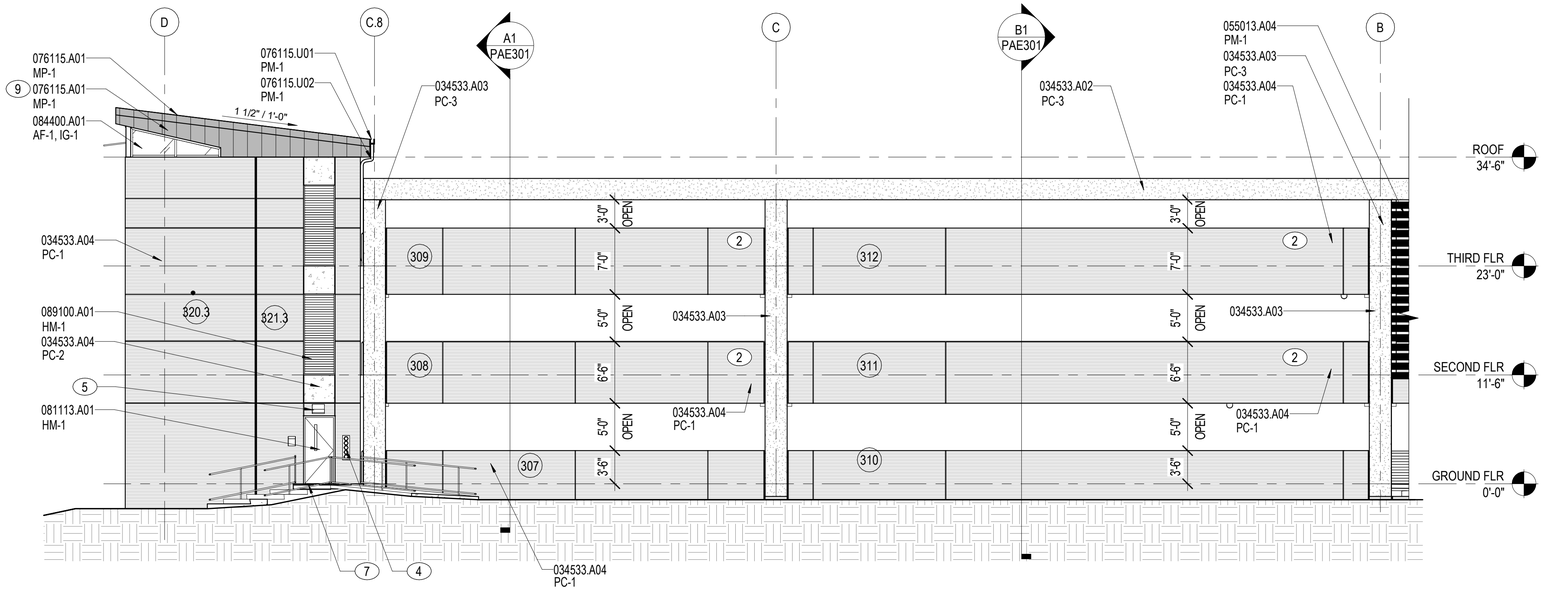

C1 PARTIAL ELEVATION - EAST

1/8" = 1'-0"

PAE201

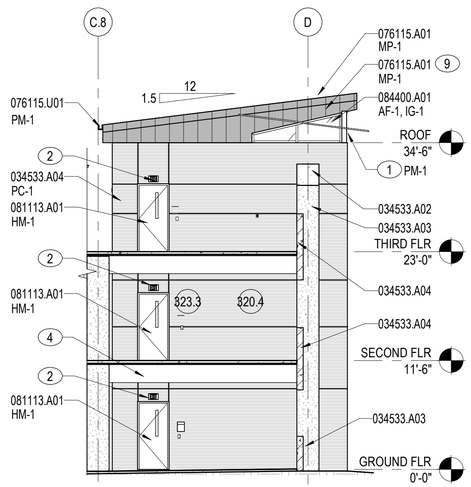

A1 PARTIAL ELEVATION - WEST STAIR 3

1/8" = 1'-0"

PAE101, PAE102, PAE103

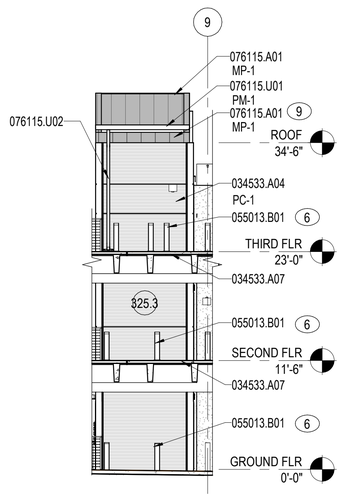

A2 NORTH STAIR 3 PARTIAL ELEVATION

1/8" = 1'-0"

PAE101, PAE102, PAE103

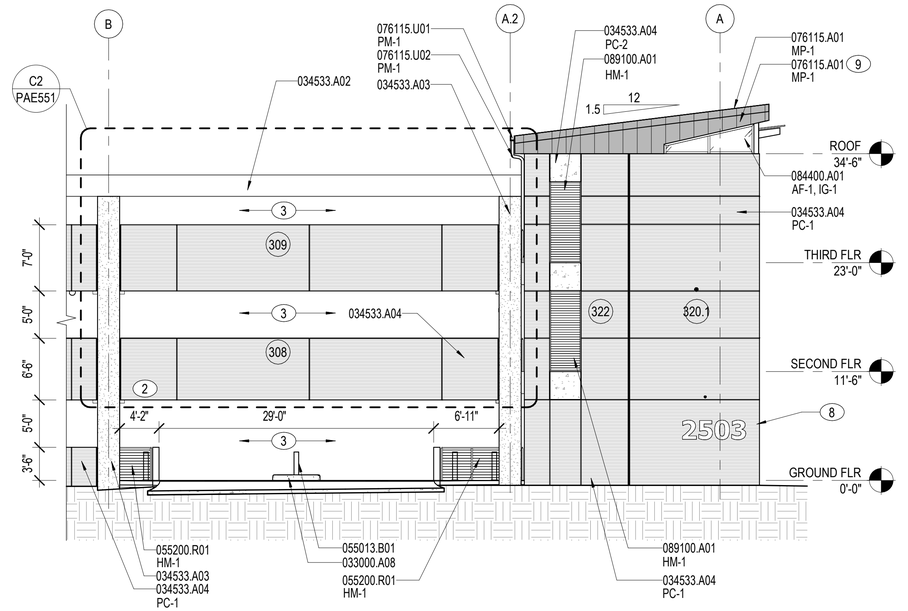

A3 PARTIAL ELEVATION - EAST

1/8" = 1'-0"

PAE201

NOTES:

SHEET NOTES:

A REFER TO SHEET PAE001 FOR ARCHITECTURAL ABBREVIATIONS AND SYMBOLS.

B ARCHITECTURAL ELEVATION FOR GROUND FLOOR TOP OF SLAB IS DEFINED AS 0'-0". REFER TO VOLUME 1, SHEETS CG101-CG102 FOR SLAB ELEVATIONS RELATIVE TO NORTH AMERICAN VERTICAL DATUM (NAVD) SYSTEM.

C WHERE COLOR IS SHOWN AS BEING SPECIFIC TO ONE MANUFACTURER, AN EQUIVALENT COLOR BY ANOTHER MANUFACTURER MAY BE SUBMITTED FOR APPROVAL. MANUFACTURERS AND MATERIALS SPECIFIED ARE NOT INTENDED TO LIMIT THE SELECTION OF EQUAL COLORS FROM OTHER MANUFACTURERS.

D PROVIDE 1-1/2" PER FOOT MINIMUM SLOPE AT STANDING SEAM METAL ROOF.

E REFER TO SHEETS PAE221-PAE229 FOR PRECAST PANEL ELEVATIONS.

F REFER TO SHEETS PAG101-PAG221 AND PAG701-PAG707 FOR SIGNAGE LOCATIONS AND ELEVATIONS.

G REFER TO SHEET PAE104Z FOR PLAN WITHOUT THE PHOTOVOLTAIC (PV) OPTION.

KEY NOTES (00)

1 ALUMINUM CANOPY SYSTEM WITH INTEGRAL DRAINAGE FOR PHOTOVOLTAIC PANEL. PROVIDE IF PARKING GARAGE PV PANEL OPTION IS AWARDED. REFER TO DETAIL A3/PAE582. REFER TO ELECTRICAL DRAWINGS PEP103A-PEP103B FOR PHOTOVOLTAIC PANEL SYSTEM INFORMATION.

2 PRECAST GRADE SPANDREL.

3 OPEN.

4 FIRE DEPARTMENT CONNECTION. REFER TO SHEETS PFX101 FOR ADDITIONAL INFORMATION.

5 LIGHT FIXTURE. REFER TO SHEETS PEL101 FOR ADDITIONAL INFORMATION.

6 SURFACE MOUNTED, REMOVABLE, PEDESTAL BOLLARD, TYP. REFER TO DETAIL A2/PAE553.

7 FOR STEPS, RAMP AND HANDRAILS, REFER TO VOLUME 1, SHEET CS102 AND LP102 FOR ADDITIONAL INFORMATION.

8 EXTERIOR BUILDING NUMBER. REFER TO VOLUME 2A, SHEET AG101 FOR ADDITIONAL INFORMATION.

9 STANDING SEAM METAL ROOF PANEL IN VERTICAL APPLICATION.

MATERIAL NOTES

033000.A08	CONCRETE CURB
034533.A02	PRECAST/PRESTRESSED CONCRETE BEAM
034533.A03	PRECAST/PRESTRESSED CONCRETE COLUMN
034533.A04	PRECAST/PRESTRESSED CONCRETE WALL PANEL
034533.A07	PRECAST/PRESTRESSED CONCRETE FLOOR DOUBLE TEE
055013.A04	EXTRUDED ALUMINUM TUBE
055013.B01	STEEL BOLLARD
055200.R01	STEEL GUARDRAIL
076115.A01	STANDING-SEAM METAL ROOF PANEL
076115.U01	GUTTER
076115.U02	DOWNSPOUT
081113.A01	STEEL DOOR
084400.A01	GLAZED ALUMINUM CURTAIN WALL ASSEMBLY
089100.A01	EXTRUDED ALUMINUM WALL LOUVER

EXTERIOR FINISH LEGEND

PC-1	ARCHITECTURAL PRECAST CONCRETE SANDBLAST LIGHT - PCI 110
PC-2	ARCHITECTURAL PRECAST CONCRETE SANDBLAST MEDIUM - PCI 110
PC-3	ARCHITECTURAL PRECAST CONCRETE SANDBLAST LIGHT - PCI 141
MP-1	STANDING SEAM METAL PANEL KINGSPAN SLR DARK BRONZE
IG-1	INSULATED LAMINATED VISION GLASS VITRO SOLARBRONZE

ADDITIONAL FINISHES:

PM-1	PREFINISHED METAL KINGSPAN SLR DARK BRONZE
AF-1	CURTAINWALL / ALUMINUM WINDOW FRAME / ALUMINUM DOOR FRAME KINGSPAN SLR DARK BRONZE
HM-1	HM DOOR / HM DOOR FRAME / LOUVER / LOUVER FRAME SW 6072 VERSATILE GRAY

0 5' 10' 20' 30'

1/8" = 1'-0" GRAPHIC SCALE

NOTE:
IF THIS DRAWING IS LESS THAN 34" X 22"
IT IS A REDUCED SIZE DRAWING

MARK	DESCRIPTION	DATE	APPR
1	MOD P00005	05/2023	
2	MOD P00006 AND P00007	10/2025	

NAVFAC

STATE OF FLORIDA
BILLY KEITH HOLLOWAY
AR93022
REGISTERED ARCHITECT
SEAL

BAMFORTH
ENGINEERING ARCHITECTURE

AE INFO

APPROVED
FOR COMMANDER NAVFAC 11/26/2025

ACTIVITY: Approved by J. Scott Roberts, Asset Management Branch Head & Supervisory Facility Planner, PWD Beaufort, SC via email.

SATISFACTORY TO DATE 12/15/2022

DES	EAD	DRW	JAF	CHK	BKH
PM/DM					KTB / RLH
BRANCH MANAGER					CGM
CHIEF ENG/ARCH					EJA
FP ENGINEER					DSN

DEPARTMENT OF THE NAVY
NAVAL FACILITIES ENGINEERING SYSTEMS COMMAND
DC CORE

NAVAL FACILITIES ENGINEERING SYSTEMS COMMAND - MID-ATLANTIC
NORFOLK, VA

MCAS BEAUFORT
BEAUFORT, SC

P-475 AIRCRAFT MAINTENANCE HANGAR - VOLUME 4 (PARKING GARAGE OPTION)

PARKING GARAGE - ENLARGED ELEVATIONS

SCALE:	1/8" = 1'-0"
EPROJECT NO.:	1363603
CONSTR. CONTR. NO.	
NAVFAC DRAWING NO.	12860316
SHEET	1095 OF 1412

PAE213

DRAWFORM REVISION: 25 AUGUST 2020

Autodesk Docs://20042 MAFA 1 503 735 Maintenance Hangar/20042 735 Maint Hangar - Parking Facility.rvt
11/4/2025 3:14:04 PM

KEY NOTES (00)

1 STANDING SEAM METAL ROOF PANEL IN VERTICAL APPLICATION.
2 ALUMINUM CANOPY SYSTEM WITH INTEGRAL DRAINAGE FOR PHOTOVOLTAIC PANEL. PROVIDE IF PARKING GARAGE PV PANEL OPTION IS AWARDED. REFER TO DETAIL A3/PAE582. REFER TO ELECTRICAL DRAWINGS PEP103A-PEP103B FOR PHOTOVOLTAIC PANEL SYSTEM INFORMATION.
3 PRECAST GRADE SPANDREL.
4 FOR STEPS, RAMP AND HANDRAILS, REFER TO VOLUME 1, SHEET CS102 AND LP102 FOR ADDITIONAL INFORMATION.
5 OPEN.
6 PHOTOVOLTAIC PANEL SYSTEM. PROVIDE IF PARKING GARAGE PV PANEL OPTION IS AWARDED. REFER TO SHEET PEP103 FOR ADDITIONAL INFORMATION.
7 WELDED WIRE PANEL PLANT SYSTEM, CENTER BETWEEN COLUMNS. REFER TO DETAIL A3/PAE552 AND SHEET PAE552 FOR SECTION DETAIL.
8 WELDED WIRE PANEL PLANT SYSTEM, CENTER BETWEEN COLUMNS. REFER TO DETAIL C2/PAE552 AND SHEET PAE552 FOR SECTION DETAIL.
9 EXTERIOR BUILDING NUMBER. REFER TO VOLUME 2A, SHEET AG101 FOR ADDITIONAL INFORMATION.

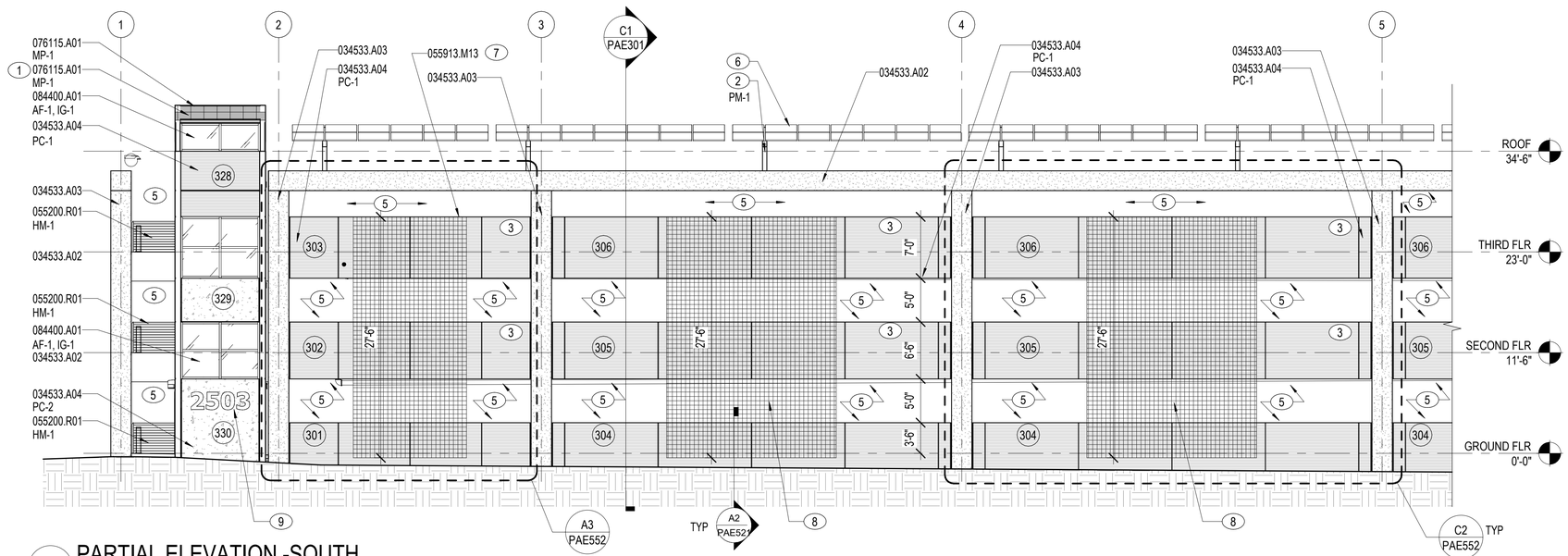

C1 PARTIAL ELEVATION -SOUTH
1/8" = 1'-0"

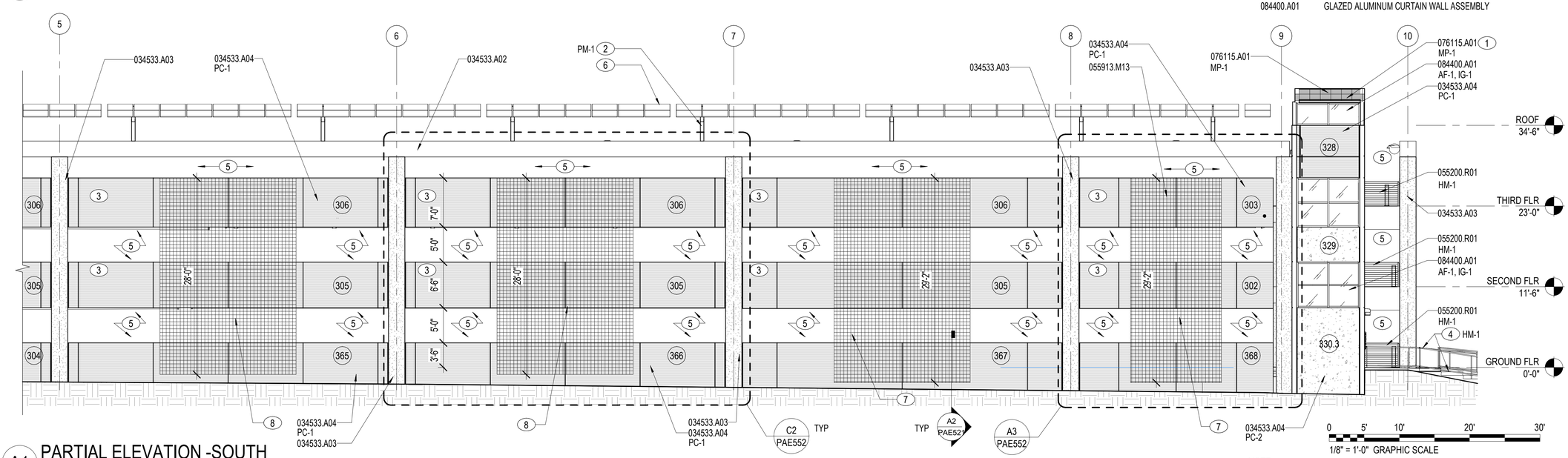

A1 PARTIAL ELEVATION -SOUTH
1/8" = 1'-0"

0 5' 10' 20' 30'
1/8" = 1'-0" GRAPHIC SCALE

NOTE:
IF THIS DRAWING IS LESS THAN 34" X 22"
IT IS A REDUCED SIZE DRAWING

NOTES:

SHEET NOTES:

A REFER TO SHEET PAE001 FOR ARCHITECTURAL ABBREVIATIONS AND SYMBOLS.
B ARCHITECTURAL ELEVATION FOR GROUND FLOOR TOP OF SLAB IS DEFINED AS 0'-0". REFER TO VOLUME 1, SHEETS CG101-CG102 FOR SLAB ELEVATIONS RELATIVE TO NORTH AMERICAN VERTICAL DATUM (NAVD) SYSTEM.
C WHERE COLOR IS SHOWN AS BEING SPECIFIC TO ONE MANUFACTURER, AN EQUIVALENT COLOR BY ANOTHER MANUFACTURER MAY BE SUBMITTED FOR APPROVAL. MANUFACTURERS AND MATERIALS SPECIFIED ARE NOT INTENDED TO LIMIT THE SELECTION OF EQUAL COLORS FROM OTHER MANUFACTURERS.
D PROVIDE 1-1/2" PER FOOT MINIMUM SLOPE AT STANDING SEAM METAL ROOF.
E REFER TO SHEETS PAE221-PAE229 FOR PRECAST PANEL ELEVATIONS.
F REFER TO SHEETS PAG101-PAG221 AND PAG701-PAG707 FOR SIGNAGE LOCATIONS AND ELEVATIONS.
G REFER TO SHEET PAE104Z FOR PLAN WITHOUT THE PHOTOVOLTAIC (PV) OPTION.

EXTERIOR FINISH LEGEND

PC-1	ARCHITECTURAL PRECAST CONCRETE SANDBLAST LIGHT - PCI 110	
PC-2	ARCHITECTURAL PRECAST CONCRETE SANDBLAST MEDIUM - PCI 110	
PC-3	ARCHITECTURAL PRECAST CONCRETE SANDBLAST LIGHT - PCI 141	
MP-1	STANDING SEAM METAL PANEL KINGSPAN SLR DARK BRONZE	
IG-1	INSULATED LAMINATED VISION GLASS VITRO SOLARBRONZE	

ADDITIONAL FINISHES:

PM-1	PREFINISHED METAL KINGSPAN SLR DARK BRONZE
AF-1	CURTAINWALL / ALUMINUM WINDOW FRAME / ALUMINUM DOOR FRAME KINGSPAN SLR DARK BRONZE
HM-1	HM DOOR / HM DOOR FRAME / LOUVER / LOUVER FRAME SW 6072 VERSATILE GRAY

MATERIAL NOTES

034533.A02	PRECAST/PRESTRESSED CONCRETE BEAM
034533.A03	PRECAST/PRESTRESSED CONCRETE COLUMN
034533.A04	PRECAST/PRESTRESSED CONCRETE WALL PANEL
055200.R01	STEEL GUARDRAIL
055913.M13	EXTERIOR TRELLIS
076115.A01	STANDING-SEAM METAL ROOF PANEL
084400.A01	GLAZED ALUMINUM CURTAIN WALL ASSEMBLY

NO	DESCRIPTION	DATE	APPR
1	MOD P00005	05/2023	
2	MOD P00006 AND P00007	10/2025	

NAVFAC

STATE OF FLORIDA
BILLY KEITH HOLLOWAY
AR93022
REGISTERED ARCHITECT
SEAL

BAMFORTH
ENGINEERING ARCHITECTURE

AE INFO

APPROVED
FOR COMMANDER NAVFAC
ACTIVITY
Approved by J. Scott Roberts,
Asset Management Branch Head &
Supervisory Facility Planner, PWD
Beaufort, SC via email.
SATISFACTORY TO DATE 12/15/2022

DES	EAD	DRW JAF	CHK BKH
PM/DM			KTB / RLH
BRANCH MANAGER			CGM
CHIEF ENG/ARCH			EJA
FP ENGINEER			DSN

DEPARTMENT OF THE NAVY
NAVAL FACILITIES ENGINEERING SYSTEMS COMMAND
DC CODE
MCAS BEAUFORT
NAVAL FACILITIES ENGINEERING SYSTEMS COMMAND – MID-ATLANTIC
NORFOLK, VA
BEAUFORT, SC
P-475 AIRCRAFT MAINTENANCE HANGAR - VOLUME 4 (PARKING GARAGE OPTION)
PARKING GARAGE - ENLARGED ELEVATIONS

SCALE:	1/8" = 1'-0"
EPROJECT NO.:	1363603
CONSTR. CONTR. NO.	
NAVFAC DRAWING NO.	12860317
SHEET	1096 OF 1412

PAE214

DRAWFORM REVISION: 25 AUGUST 2020

Autodesk Docs://20043 MAX 502 F39 Maintenance Hangar/20043 F39 Maint Hangar_Parking Facility.rvt
11/4/2025 8:34:07 PM

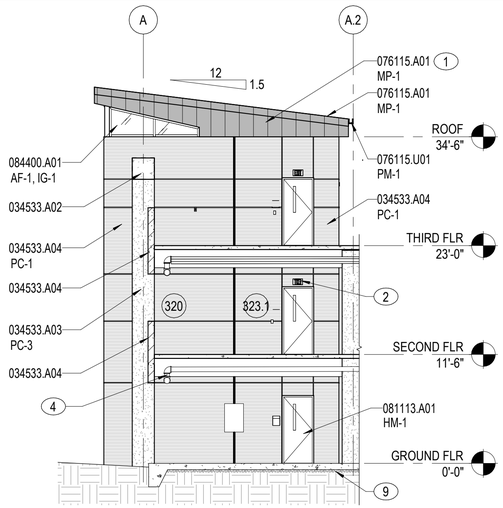

C1 ENLARGED ELEVATION

1/8" = 1'-0" PAE412, PAE413

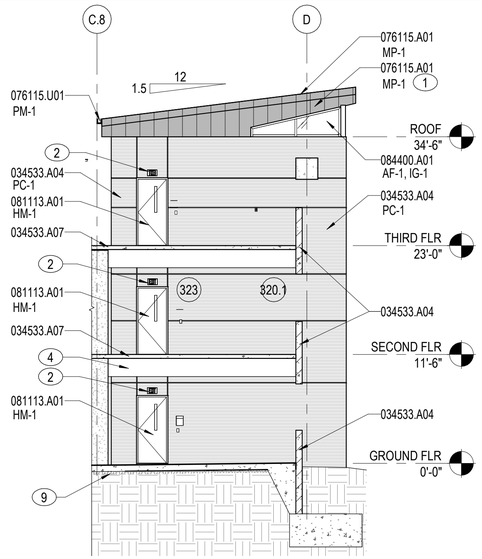

C3 ENLARGED ELEVATION

1/8" = 1'-0" PAE411

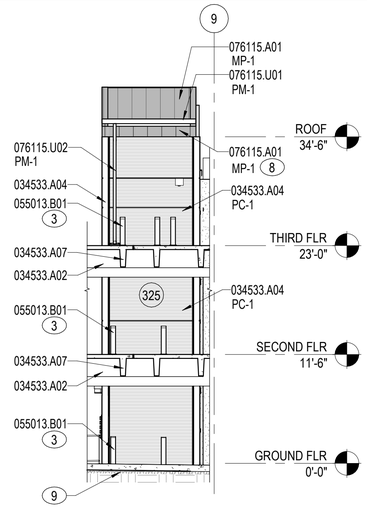

C4 ENLARGED ELEVATION

1/8" = 1'-0" PAE411, PAE412, PAE413

NOTES:

SHEET NOTES:

A REFER TO SHEET PAE001 FOR ARCHITECTURAL ABBREVIATIONS AND SYMBOLS.

B ARCHITECTURAL ELEVATION FOR GROUND FLOOR TOP OF SLAB IS DEFINED AS 0'-0". REFER TO VOLUME 1, SHEETS CG101-CG102 FOR SLAB ELEVATIONS RELATIVE TO NORTH AMERICAN VERTICAL DATUM (NAVD) SYSTEM.

C WHERE COLOR IS SHOWN AS BEING SPECIFIC TO ONE MANUFACTURER, AN EQUIVALENT COLOR BY ANOTHER MANUFACTURER MAY BE SUBMITTED FOR APPROVAL. MANUFACTURERS AND MATERIALS SPECIFIED ARE NOT INTENDED TO LIMIT THE SELECTION OF EQUAL COLORS FROM OTHER MANUFACTURERS.

D PROVIDE 1-1/2" PER FOOT MINIMUM SLOPE AT STANDING SEAM METAL ROOF.

E REFER TO SHEETS PAE221-PAE229 FOR PRECAST PANEL ELEVATIONS.

F REFER TO SHEETS PAG101-PAG221 AND PAG701-PAG707 FOR SIGNAGE LOCATIONS AND ELEVATIONS.

G REFER TO SHEET PAE104Z FOR PLAN WITHOUT THE PHOTOVOLTAIC (PV) OPTION.

KEY NOTES (00)

1 STANDING SEAM METAL ROOF PANEL IN VERTICAL APPLICATION.

2 LIGHT FIXTURE. REFER TO SHEETS PEL101, PEL102, AND PEL103 FOR ADDITIONAL INFORMATION.

3 SURFACE MOUNTED, REMOVABLE, PEDESTAL BOLLARD, TYP. REFER TO DETAIL A2/PAE553.

4 FIRE RISER. REFER TO SHEETS PFX101, PFX111, AND PFX121 FOR ADDITIONAL INFORMATION.

5 OPEN.

6 GUARDRAIL FROM RAMP SURFACE AND PARKING SURFACE UP TO 42" MINIMUM IN HEIGHT. FOLLOW ELEVATION FOR PATTERN. REFER TO DETAIL D2/AE421.

7 WIRE MESH PANEL. REFER TO DETAIL D1/PAE421.

8 PARKING GARAGE ENTRANCE

9 4" POROUS FILL.

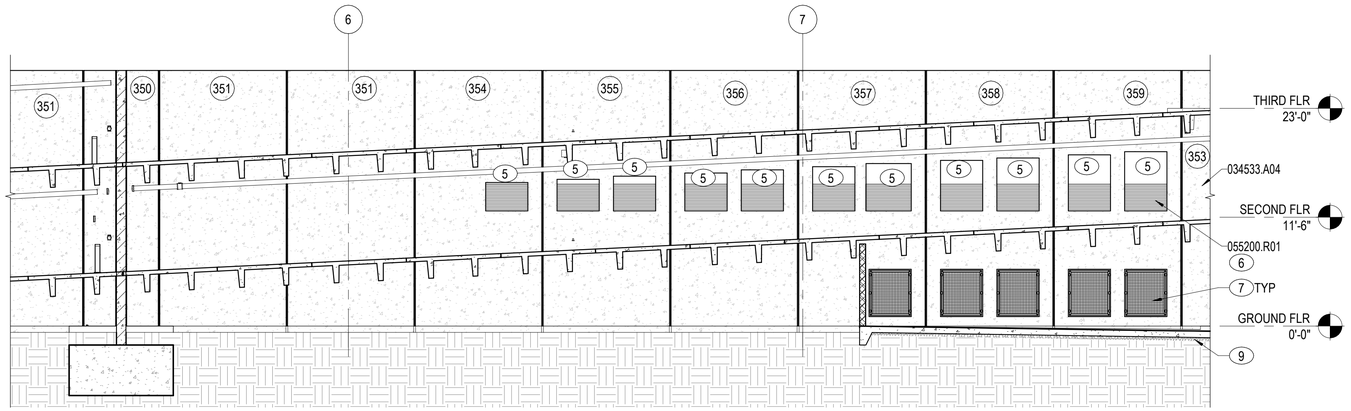

B2 PARTIAL ELEVATION - NORTH LITEWALL

1/8" = 1'-0" PAE101, PAE102, PAE103

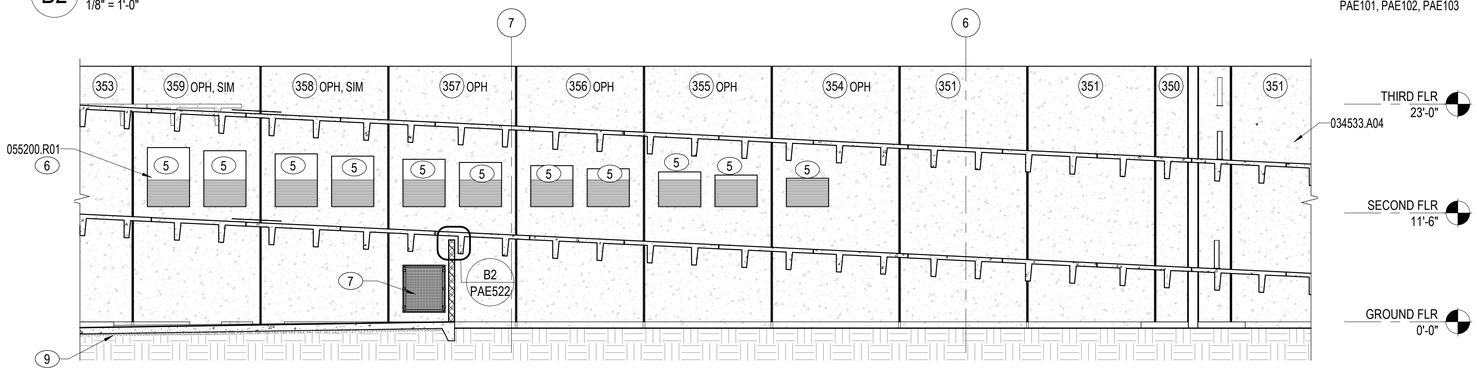

A1 PARTIAL ELEVATION - SOUTH LITEWALL

1/8" = 1'-0" PAE101, PAE102, PAE103

MATERIAL NOTES

034533.A02	PRECAST/PRESTRESSED CONCRETE BEAM
034533.A03	PRECAST/PRESTRESSED CONCRETE COLUMN
034533.A04	PRECAST/PRESTRESSED CONCRETE WALL PANEL
034533.A07	PRECAST/PRESTRESSED CONCRETE FLOOR DOUBLE TEE
055013.B01	STEEL BOLLARD
055200.R01	STEEL GUARDRAIL
076115.A01	STANDING-SEAM METAL ROOF PANEL
076115.U01	GUTTER
076115.U02	DOWNSPOUT
081113.A01	STEEL DOOR
084400.A01	GLAZED ALUMINUM CURTAIN WALL ASSEMBLY

EXTERIOR FINISH LEGEND

PC-1	ARCHITECTURAL PRECAST CONCRETE SANDBLAST LIGHT - PCI 110
PC-2	ARCHITECTURAL PRECAST CONCRETE SANDBLAST MEDIUM - PCI 110
PC-3	ARCHITECTURAL PRECAST CONCRETE SANDBLAST LIGHT - PCI 141
MP-1	STANDING SEAM METAL PANEL KINGSPAN SLR DARK BRONZE
IG-1	INSULATED LAMINATED VISION GLASS VITRO SOLARBRONZE

ADDITIONAL FINISHES:

PM-1	PREFINISHED METAL KINGSPAN SLR DARK BRONZE
AF-1	CURTAINWALL / ALUMINUM WINDOW FRAME / ALUMINUM DOOR FRAME KINGSPAN SLR DARK BRONZE
HM-1	HM DOOR / HM DOOR FRAME / LOUVER / LOUVER FRAME SW 6072 VERSATILE GRAY

0 5' 10' 20' 30'

1/8" = 1'-0" GRAPHIC SCALE

NOTE:
IF THIS DRAWING IS LESS THAN 34" X 22"
IT IS A REDUCED SIZE DRAWING

NO.	DESCRIPTION	DATE	APPR
1	MOD P00005	05/2023	
2	MOD P00006 AND P00007	10/2025	

NAVFAC

STATE OF FLORIDA
BILLY KEITH HOLLOWAY
AR93022
REGISTERED ARCHITECT
SEAL

BAMFORTH
ENGINEERING ARCHITECTURE

AE INFO

APPROVED
FOR COMMANDER NAVFAC 11/21/2025

ACTIVITY
Approved by J. Scott Roberts, Asset Management Branch Head & Supervisory Facility Planner, PWD Beaufort, SC via email.

SATISFACTORY TO DATE 12/15/2022

DES	EAD	DRW	MCL	CHK	BKH
PMDM					KTB / RLH
BRANCH MANAGER					CGM
CHIEF ENG/ARCH					EJA
FP ENGINEER					DSN

DEPARTMENT OF THE NAVY
NAVAL FACILITIES ENGINEERING SYSTEMS COMMAND
DC CORE

NAVAL FACILITIES ENGINEERING SYSTEMS COMMAND ~ MID-ATLANTIC
NORFOLK, VA

MCAS BEAUFORT
BEAUFORT, SC

P-475 AIRCRAFT MAINTENANCE HANGAR - VOLUME 4 (PARKING GARAGE OPTION)

PARKING GARAGE - ENLARGED ELEVATIONS

SCALE: 1/8" = 1'-0"
EPROJECT NO.: 1363603
CONSTR. CONTR. NO.
NAVFAC DRAWING NO.: 12860318
SHEET 1097 OF 1412

PAE215

DRAWFORM REVISION: 25 AUGUST 2020

Autodesk Docs://20043 MAT 103 F35 Maintenance Hangar (20043 F35 Maint Hangar_Parking Facility.rvt
11/4/2025 8:34:09 PM

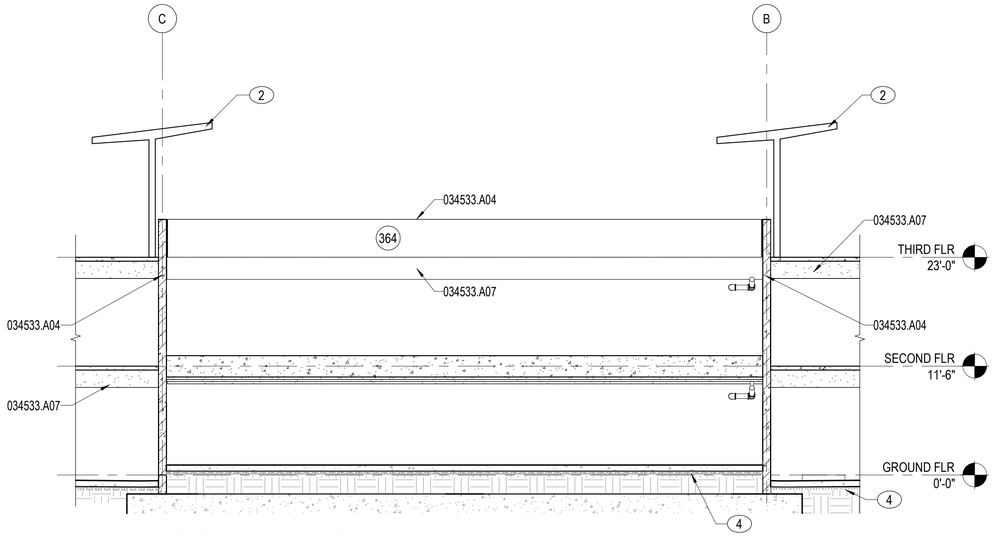

C1 PARTIAL ELEVATION - WEST WALL

1/8" = 1'-0"

PAE101, PAE102, PAE103

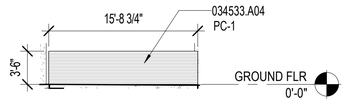

D4 ENTRANCE - NORTH PRECAST

1/8" = 1'-0"

PAE401

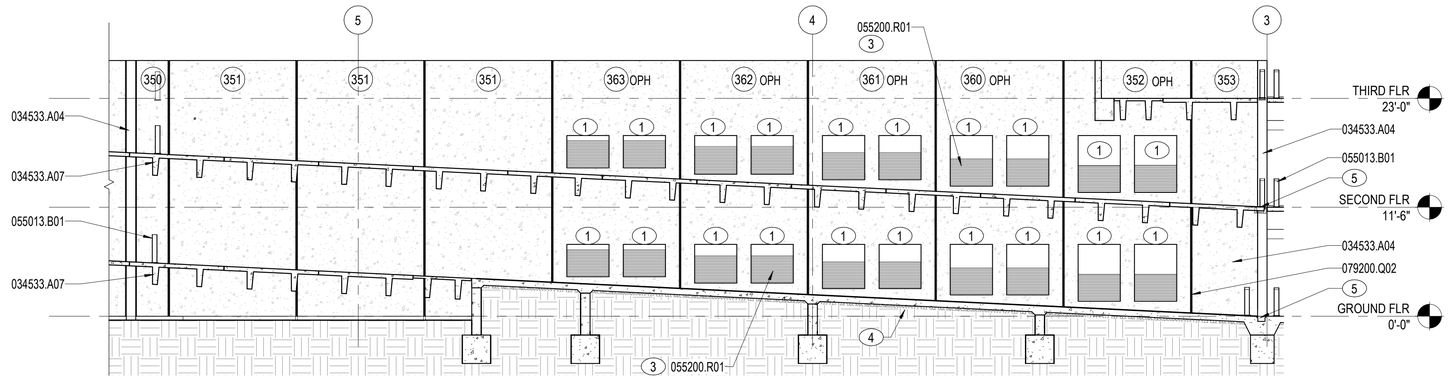

B1 PARTIAL ELEVATION - SOUTH LITEWALL

1/8" = 1'-0"

PAE101, PAE102, PAE103

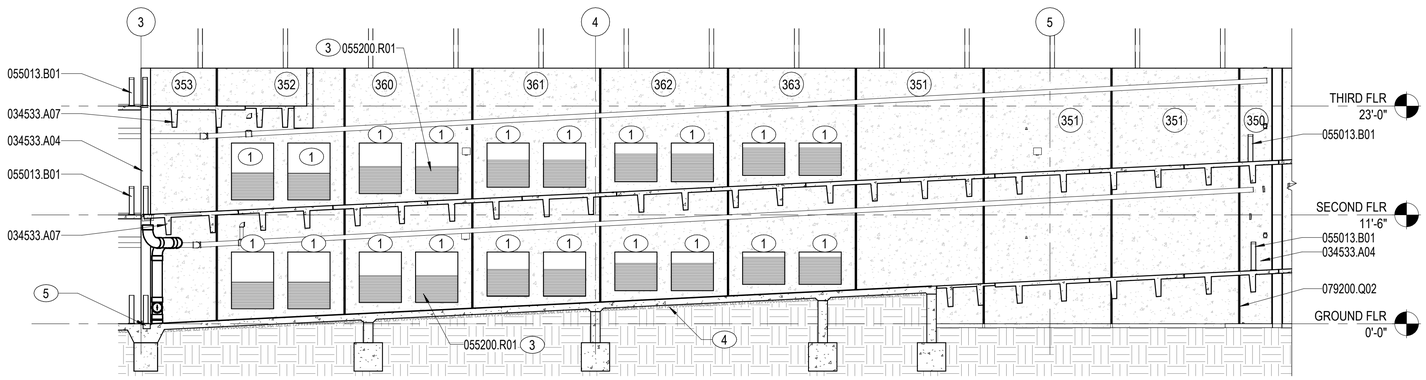

A1 PARTIAL ELEVATION - NORTH LITEWALL

1/8" = 1'-0"

PAE101, PAE102, PAE103

NOTES:

SHEET NOTES:

A REFER TO SHEET PAE001 FOR ARCHITECTURAL ABBREVIATIONS AND SYMBOLS.

B ARCHITECTURAL ELEVATION FOR GROUND FLOOR TOP OF SLAB IS DEFINED AS 0'-0". REFER TO VOLUME 1, SHEETS CG101-CG102 FOR SLAB ELEVATIONS RELATIVE TO NORTH AMERICAN VERTICAL DATUM (NAVD) SYSTEM.

C WHERE COLOR IS SHOWN AS BEING SPECIFIC TO ONE MANUFACTURER, AN EQUIVALENT COLOR BY ANOTHER MANUFACTURER MAY BE SUBMITTED FOR APPROVAL. MANUFACTURERS AND MATERIALS SPECIFIED ARE NOT INTENDED TO LIMIT THE SELECTION OF EQUAL COLORS FROM OTHER MANUFACTURERS.

D PROVIDE 1-1/2" PER FOOT MINIMUM SLOPE AT STANDING SEAM METAL ROOF.

E REFER TO SHEETS PAE221-PAE229 FOR PRECAST PANEL ELEVATIONS.

F REFER TO SHEETS PAG101-PAG221 AND PAG701-PAG707 FOR SIGNAGE LOCATIONS AND ELEVATIONS.

G REFER TO SHEET PAE104Z FOR PLAN WITHOUT THE PHOTOVOLTAIC (PV) OPTION.

KEY NOTES (00)

1 OPEN.

2 BID OPTION. ALUMINUM CANOPY SYSTEM WITH INTEGRAL DRAINAGE FOR PHOTOVOLTAIC PANEL. PROVIDE IF PARKING GARAGE PV PANEL OPTION IS AWARDED. REFER TO DETAIL A1/PAE582. REFER TO ELECTRICAL DRAWINGS PEP103A-PEP103B FOR PHOTOVOLTAIC PANEL SYSTEM INFORMATION.

3 GUARDRAIL FROM RAMP SURFACE AND PARKING SURFACE UP TO 42" MINIMUM IN HEIGHT. FOLLOW ELEVATION FOR PATTERN. REFER TO DETAIL D2/PAE421.

4 4" POROUS FILL.

5 12" LINEAR DRAIN. REFER TO SHEETS PPP101-PPP102 FOR ADDITIONAL INFORMATION.

MATERIAL NOTES

034533.A04	PRECAST/PRESTRESSED CONCRETE WALL PANEL
034533.A07	PRECAST/PRESTRESSED CONCRETE FLOOR DOUBLE TEE
055013.B01	STEEL BOLLARD
055200.R01	STEEL GUARDRAIL
079200.Q02	BACKSTOP AND SEALANT

EXTERIOR FINISH LEGEND

PC-1	ARCHITECTURAL PRECAST CONCRETE SANDBLAST LIGHT - PCI 110	
PC-2	ARCHITECTURAL PRECAST CONCRETE SANDBLAST MEDIUM - PCI 110	
PC-3	ARCHITECTURAL PRECAST CONCRETE SANDBLAST LIGHT - PCI 141	
MP-1	STANDING SEAM METAL PANEL KINGSPAN SLR DARK BRONZE	
IG-1	INSULATED LAMINATED VISION GLASS VITRO SOLARBRONZE	

ADDITIONAL FINISHES:

PM-1	PREFINISHED METAL KINGSPAN SLR DARK BRONZE
AF-1	CURTAINWALL / ALUMINUM WINDOW FRAME / ALUMINUM DOOR FRAME KINGSPAN SLR DARK BRONZE
HM-1	HM DOOR / HM DOOR FRAME / LOUVER / LOUVER FRAME SW 6072 VERSATILE GRAY

0 5' 10' 20' 30'

1/8" = 1'-0" GRAPHIC SCALE

NOTE:
IF THIS DRAWING IS LESS THAN 34" X 22"
IT IS A REDUCED SIZE DRAWING

NUM	DESCRIPTION	DATE	APPR
1	MOD P00005	05/2023	
2	MOD P00006 AND P00007	10/2025	

NAVFAC

STATE OF FLORIDA
BILLY KEITH HOLLOWAY
AR93022
REGISTERED ARCHITECT
SEAL

BAMFORTH
ENGINEERING ARCHITECTURE

AE INFO

APPROVED

FOR COMMANDER NAVFAC

ACTIVITY
Approved by J. Scott Roberts,
Asset Management Branch Head &
Supervisory Facility Planner, PWD
Beaufort, SC via email.

SATISFACTORY TO DATE 12/15/2022

DES	EAD	DRW	MCL	CHK	BKH
PM/DM					KTB / RLH
BRANCH MANAGER					CGM
CHIEF ENG/ARCH					EJA
FP ENGINEER					DSN

DEPARTMENT OF THE NAVY
NAVAL FACILITIES ENGINEERING SYSTEMS COMMAND
DC CODE
NAVAL FACILITIES ENGINEERING SYSTEMS COMMAND – MID-ATLANTIC
NORFOLK, VA
MCAS BEAUFORT
BEAUFORT, SC
P-475 AIRCRAFT MAINTENANCE HANGAR - VOLUME 4 (PARKING GARAGE OPTION)
PARKING GARAGE - ENLARGED ELEVATIONS

SCALE:	1/8" = 1'-0"
EPROJECT NO.:	1363603
CONSTR. CONTR. NO.	
NAVFAC DRAWING NO.	12860319
SHEET	1098 OF 1412

PAE216

DRAWFORM REVISION: 25 AUGUST 2020

Autodesk Docs://20043 MAX 552 F35 Maintenance Hangar/20043 F35 Maint Hangar_Parking Facility.rvt
11/4/2025 8:34:11 PM

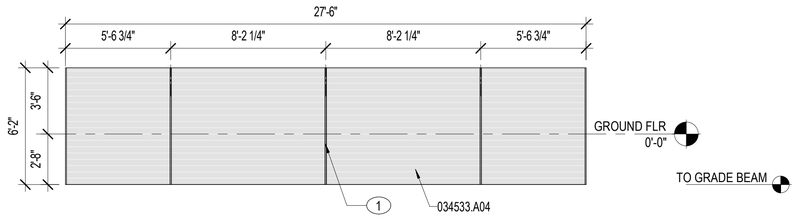

D1 **301**
1/4" = 1'-0"
PAE214

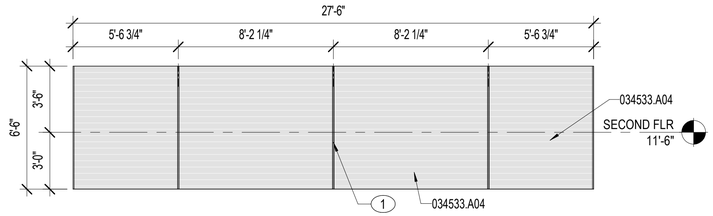

D3 **302**
1/4" = 1'-0"
PAE212, PAE214

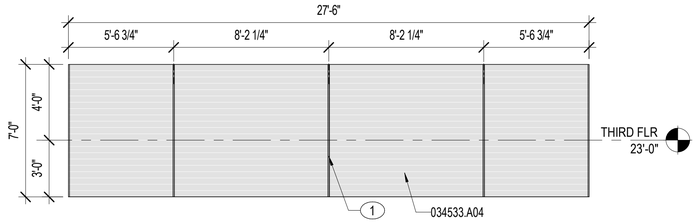

C1 **303**
1/4" = 1'-0"
PAE212, PAE214

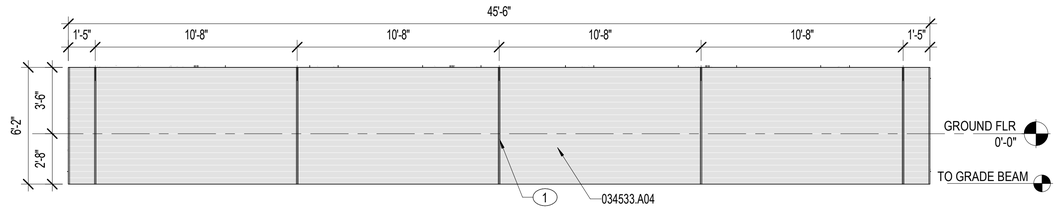

C3 **304**
1/4" = 1'-0"
PAE214

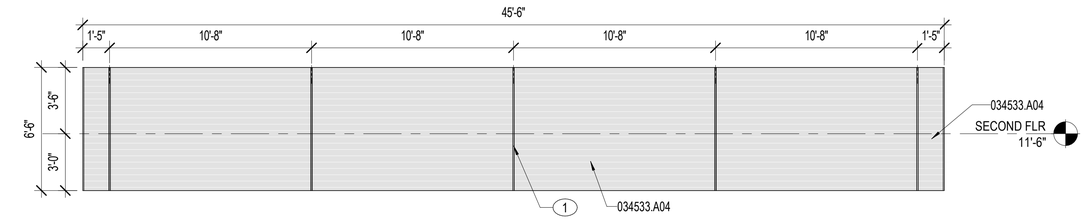

B2 **305**
1/4" = 1'-0"
PAE212, PAE214

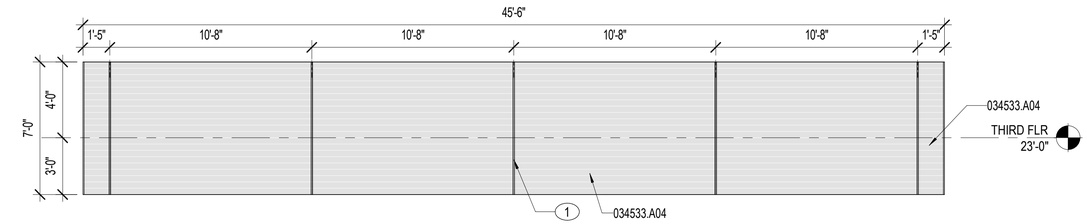

A2 **306**
1/4" = 1'-0"
PAE212, PAE214

NOTES:

SHEET NOTES:

A REFER TO SHEET PAE001 FOR ARCHITECTURAL ABBREVIATIONS AND SYMBOLS.
B REFER TO SHEETS PAE531-PAE532 FOR TYPICAL SEALANT INSTALLATION REQUIREMENTS ON ALL PRECAST CONCRETE PANELS IN THIS PROJECT.
C REFER TO ENLARGED PANEL ELEVATIONS FOR PANEL JOINT AND TYPE LOCATIONS AND REVEAL TYPES AND LOCATIONS.
D PRECAST PANELS ARE BASED ON A 1" JOINT BETWEEN PANELS.
E PANEL ELEVATIONS ARE MEANT TO BE A DESIGN GUIDE. PRECAST MANUFACTURER TO VERIFY FINAL DIMENSIONS AND PRECAST PENETRATIONS PRIOR TO FABRICATION.
F COORDINATE DOOR, WINDOW AND OTHER OPENINGS WITH ARCHITECTURE AND ENGINEERING DRAWINGS.
G COORDINATE BOTTOM OF PANEL WITH STRUCTURAL GRADE BEAM LOCATIONS.
H THE NUMBER OF PANEL TYPES CAN BE REDUCED PER CONCRETE PANEL MANUFACTURER RECOMMENDATIONS, WITH ARCHITECT'S APPROVAL.
I COORDINATE ALL DEVICES & OPENINGS ON PRECAST PANELS.
J CENTER CONDUCTOR HEADS AND DOWNSPOUTS IN PRECAST PANELS.

KEY NOTES (00)

1 PRECAST PANEL REVEAL. SEE DETAIL B4/PAE532.

MATERIAL NOTES

034533.A04 PRECAST/PRESTRESSED CONCRETE WALL PANEL

EXTERIOR FINISH LEGEND		
PC-1	ARCHITECTURAL PRECAST CONCRETE SANDBLAST LIGHT - PCI 110	
PC-2	ARCHITECTURAL PRECAST CONCRETE SANDBLAST MEDIUM - PCI 110	
PC-3	ARCHITECTURAL PRECAST CONCRETE SANDBLAST LIGHT - PCI 141	

0 1' 5' 10' 15'
1/4" = 1'-0" GRAPHIC SCALE

NOTE:
IF THIS DRAWING IS LESS THAN 34" X 22"
IT IS A REDUCED SIZE DRAWING

NO	DESCRIPTION	DATE	APPR
1	MOD P00005	05/2023	
2	MOD P00006 AND P00007	10/2025	

NAVFAC

STATE OF FLORIDA
BILLY KEITH HOLLOWAY
AR93022
REGISTERED ARCHITECT
SEAL

BAMFORTH ENGINEERS ARCHITECTS
AE INFO

APPROVED
FOR COMMANDER NAVFAC 11/6/2025
ACTIVITY
Approved by J. Scott Roberts,
Asset Management Branch Head &
Supervisory Facility Planner, PWD
Beaufort, SC via email.

SATISFACTORY TO DATE	12/15/2022
DES EAD / DRW JAF / CHK BKH	
PMDM	KTB / RLH
BRANCH MANAGER	CGM
CHIEF ENG/ARCH	EJA
FP ENGINEER	DSN

DEPARTMENT OF THE NAVY
NAVAL FACILITIES ENGINEERING SYSTEMS COMMAND
DO CORE
NAVAL FACILITIES ENGINEERING SYSTEMS COMMAND ~ MID-ATLANTIC
NORFOLK, VA
MCAS BEAUFORT
BEAUFORT, SC
P-475 AIRCRAFT MAINTENANCE HANGAR -
VOLUME 4 (PARKING GARAGE OPTION)
PARKING GARAGE - PRECAST PANEL ELEVATIONS

SCALE:	As indicated
EPROJECT NO.:	1363603
CONSTR. CONTR. NO.	
NAVFAC DRAWING NO.	12860320
SHEET	1099 OF 1412

PAE221

DRAWFORM REVISION: 25 AUGUST 2020

Autodesk Docs://20042 MAFAT 502 735 Maintenance Hangar/20042 F35 Maint Hangar_Parking Facility.rvt
11/4/2025 11:25:5 PM

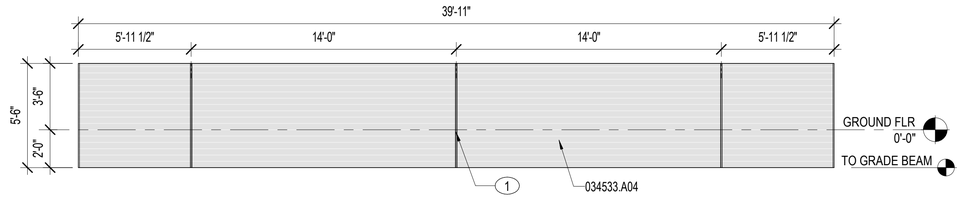

D1 307
1/4" = 1'-0"
PAE211, PAE213

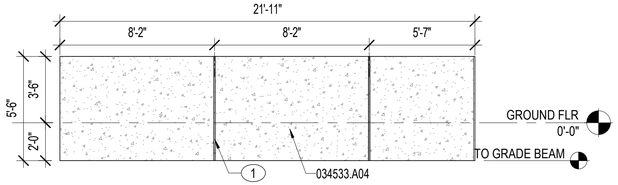

D3 313
1/4" = 1'-0"
PAE212

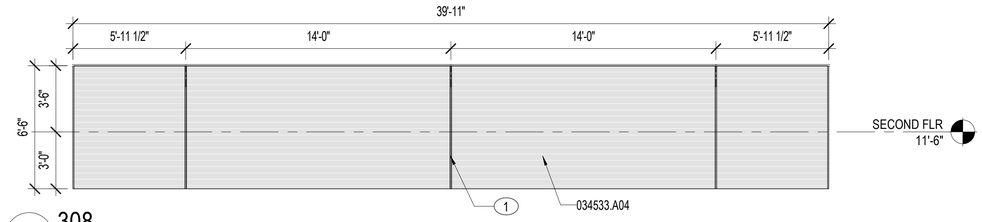

C1 308
1/4" = 1'-0"
PAE211, PAE213

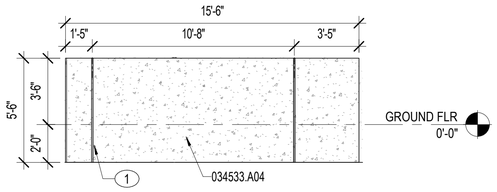

C3 314
1/4" = 1'-0"
PAE212

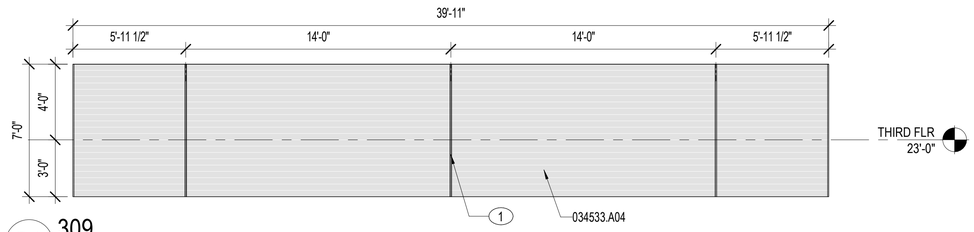

B1 309
1/4" = 1'-0"
PAE211, PAE213

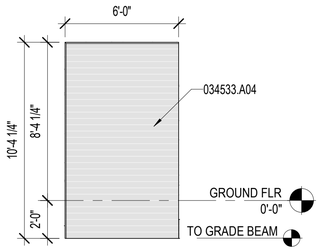

B3 315
1/4" = 1'-0"
PAE211

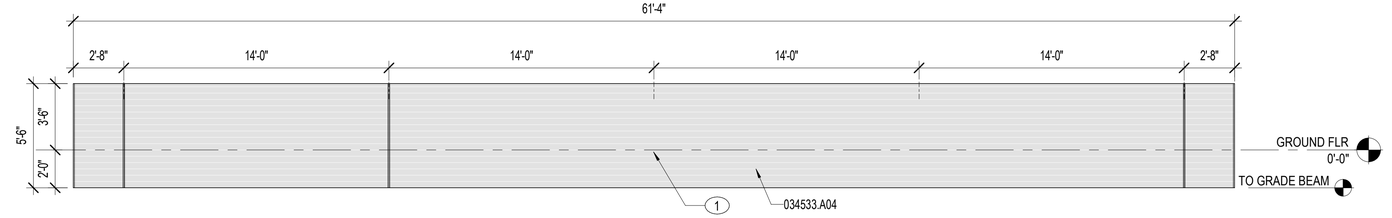

A1 310
1/4" = 1'-0"
PAE213

NOTES:

SHEET NOTES:

A REFER TO SHEET PAE001 FOR ARCHITECTURAL ABBREVIATIONS AND SYMBOLS.
B REFER TO SHEETS PAE531-PAE532 FOR TYPICAL SEALANT INSTALLATION REQUIREMENTS ON ALL PRECAST CONCRETE PANELS IN THIS PROJECT.
C REFER TO ENLARGED PANEL ELEVATIONS FOR PANEL JOINT AND TYPE LOCATIONS AND REVEAL TYPES AND LOCATIONS.
D PRECAST PANELS ARE BASED ON A 1" JOINT BETWEEN PANELS.
E PANEL ELEVATIONS ARE MEANT TO BE A DESIGN GUIDE. PRECAST MANUFACTURER TO VERIFY FINAL DIMENSIONS AND PRECAST PENETRATIONS PRIOR TO FABRICATION.
F COORDINATE DOOR, WINDOW AND OTHER OPENINGS WITH ARCHITECTURE AND ENGINEERING DRAWINGS.
G COORDINATE BOTTOM OF PANEL WITH STRUCTURAL GRADE BEAM LOCATIONS.
H THE NUMBER OF PANEL TYPES CAN BE REDUCED PER CONCRETE PANEL MANUFACTURER RECOMMENDATIONS, WITH ARCHITECT'S APPROVAL.
I COORDINATE ALL DEVICES & OPENINGS ON PRECAST PANELS.
J CENTER CONDUCTOR HEADS AND DOWNSPOUTS IN PRECAST PANELS.

KEY NOTES (00)

1 PRECAST PANEL REVEAL. SEE DETAIL B4/PAE532.

MATERIAL NOTES

034533.A04 PRECAST/PRESTRESSED CONCRETE WALL PANEL

EXTERIOR FINISH LEGEND		
PC-1	ARCHITECTURAL PRECAST CONCRETE SANDBLAST LIGHT - PCI 110	
PC-2	ARCHITECTURAL PRECAST CONCRETE SANDBLAST MEDIUM - PCI 110	
PC-3	ARCHITECTURAL PRECAST CONCRETE SANDBLAST LIGHT - PCI 141	

0 1' 5' 10' 15'
1/4" = 1'-0" GRAPHIC SCALE

NOTE:
IF THIS DRAWING IS LESS THAN 34" X 22"
IT IS A REDUCED SIZE DRAWING

NO	DESCRIPTION	DATE	APPR
1	MOD P00005	05/2023	
2	MOD P00006 AND P00007	10/2025	

NAVFAC

STATE OF FLORIDA
BILLY KEITH HOLLOWAY
AR93022
REGISTERED ARCHITECT
SEAL

BAMFORTH ENGINEERING CONSULTANTS
AE INFO

APPROVED
FOR COMMANDER NAVFAC 11/21/2025
ACTIVITY Approved by J. Scott Roberts, Asset Management Branch Head & Supervisory Facility Planner, PWD Beaufort, SC via email.
SATISFACTORY TO DATE 12/15/2022
DES EAD | DRW JAF | CHK BKH
PM/DM KTB / RLH
BRANCH MANAGER CGM
CHIEF ENG/ARCH EJA
FP ENGINEER DSN

DEPARTMENT OF THE NAVY
NAVAL FACILITIES ENGINEERING SYSTEMS COMMAND
DC CORE
MCAS BEAUFORT

NAVAL FACILITIES ENGINEERING SYSTEMS COMMAND - MID-ATLANTIC
NORFOLK, VA

P-475 AIRCRAFT MAINTENANCE HANGAR - BEAUFORT, SC
VOLUME 4 (PARKING GARAGE OPTION)
PARKING GARAGE - PRECAST PANEL ELEVATIONS

SCALE: As indicated
EPROJECT NO.: 1363603
CONSTR. CONTR. NO.
NAVFAC DRAWING NO. 12860321
SHEET 1100 OF 1412

PAE222

DRAWFORM REVISION: 25 AUGUST 2020

Autodesk Docs://20042 MAFA1 503 735 Maintenance Hangar/20042 735 Maint Hangar_Parking Facility.rvt
11/4/2025 1:12:29 PM

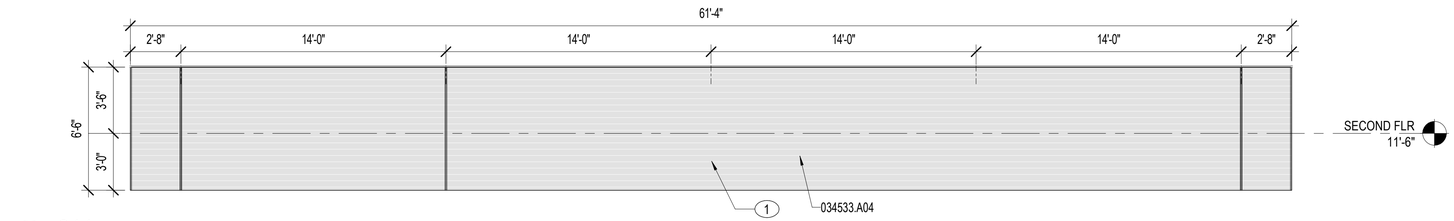

D1 311
1/4" = 1'-0"
PAE213

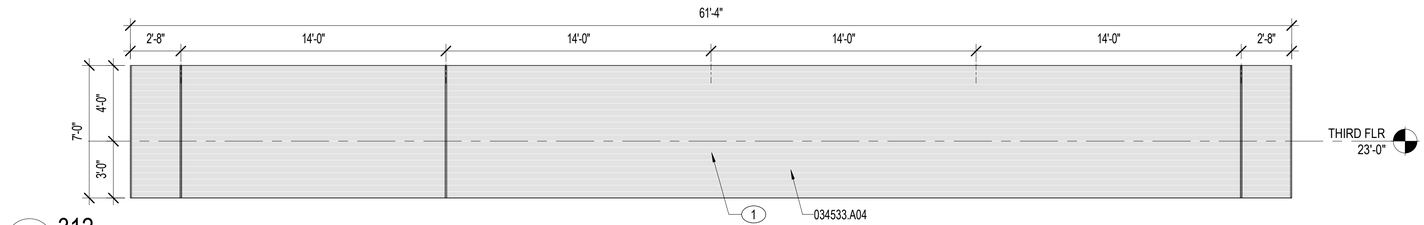

C1 312
1/4" = 1'-0"
PAE213

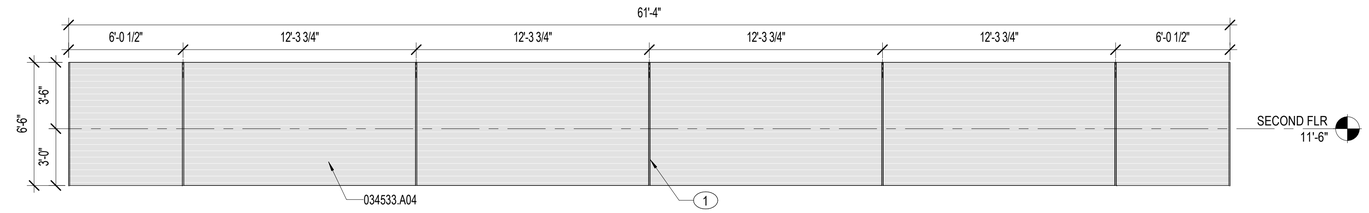

B2 316
1/4" = 1'-0"
PAE211

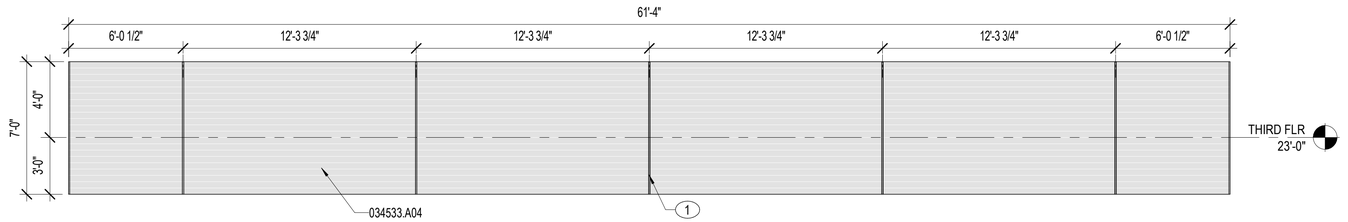

A1 317
1/4" = 1'-0"
PAE211

NOTES:

SHEET NOTES:

A REFER TO SHEET PAE001 FOR ARCHITECTURAL ABBREVIATIONS AND SYMBOLS.
B REFER TO SHEETS PAE531-PAE532 FOR TYPICAL SEALANT INSTALLATION REQUIREMENTS ON ALL PRECAST CONCRETE PANELS IN THIS PROJECT.
C REFER TO ENLARGED PANEL ELEVATIONS FOR PANEL JOINT AND TYPE LOCATIONS AND REVEAL TYPES AND LOCATIONS.
D PRECAST PANELS ARE BASED ON A 1" JOINT BETWEEN PANELS.
E PANEL ELEVATIONS ARE MEANT TO BE A DESIGN GUIDE. PRECAST MANUFACTURER TO VERIFY FINAL DIMENSIONS AND PRECAST PENETRATIONS PRIOR TO FABRICATION.
F COORDINATE DOOR, WINDOW AND OTHER OPENINGS WITH ARCHITECTURE AND ENGINEERING DRAWINGS.
G COORDINATE BOTTOM OF PANEL WITH STRUCTURAL GRADE BEAM LOCATIONS.
H THE NUMBER OF PANEL TYPES CAN BE REDUCED PER CONCRETE PANEL MANUFACTURER RECOMMENDATIONS, WITH ARCHITECT'S APPROVAL.
I COORDINATE ALL DEVICES & OPENINGS ON PRECAST PANELS.
J CENTER CONDUCTOR HEADS AND DOWNSPOUTS IN PRECAST PANELS.

KEY NOTES (00)

1 PRECAST PANEL REVEAL. SEE DETAIL B4/PAE532.

MATERIAL NOTES

034533.A04 PRECAST/PRESTRESSED CONCRETE WALL PANEL

EXTERIOR FINISH LEGEND		
PC-1	ARCHITECTURAL PRECAST CONCRETE SANDBLAST LIGHT - PCI 110	
PC-2	ARCHITECTURAL PRECAST CONCRETE SANDBLAST MEDIUM - PCI 110	
PC-3	ARCHITECTURAL PRECAST CONCRETE SANDBLAST LIGHT - PCI 141	

0 1' 5' 10' 15'
1/4" = 1'-0" GRAPHIC SCALE

NOTE:
IF THIS DRAWING IS LESS THAN 34" X 22"
IT IS A REDUCED SIZE DRAWING

APPR	DATE	DESCRIPTION
1	05/2023	MOD P00005
2	10/2025	MOD P00006 AND P00007

NAVFAC

STATE OF FLORIDA
BILLY KEITH HOLLOWAY
AR93022
REGISTERED ARCHITECT
SEAL

BAMFORTH
ENGINEERING CONTRACTING

AE INFO

APPROVED
FOR COMMANDER NAVFAC 11/6/2025

ACTIVITY
Approved by J. Scott Roberts,
Asset Management Branch Head &
Supervisory Facility Planner, PWD
Beaufort, SC via email.

SATISFACTORY TO DATE	12/15/2022
DES EAD / DRW JAF / CHK BKH	
PM/DM	KTB / RLH
BRANCH MANAGER	CGM
CHIEF ENG/ARCH	EJA
FP ENGINEER	DSN

DEPARTMENT OF THE NAVY
NAVAL FACILITIES ENGINEERING SYSTEMS COMMAND
DC CORE
MCAS BEAUFORT

NAVAL FACILITIES ENGINEERING SYSTEMS COMMAND ~ MID-ATLANTIC
NORFOLK, VA

BEAUFORT, SC

P-475 AIRCRAFT MAINTENANCE HANGAR - VOLUME 4 (PARKING GARAGE OPTION)

PARKING GARAGE - PRECAST PANEL ELEVATIONS

SCALE:	As indicated
EPROJECT NO.:	1363603
CONSTR. CONTR. NO.	
NAVFAC DRAWING NO.:	12860322
SHEET	1101 OF 1412

PAE223

DRAWFORM REVISION: 25 AUGUST 2020

Autodesk Docs://20043 MAFAT 102 F35 Maintenance Hangar/20043 F35 Maint Hangar_Parking Facility.rvt
11/4/2025 1:12:31 PM

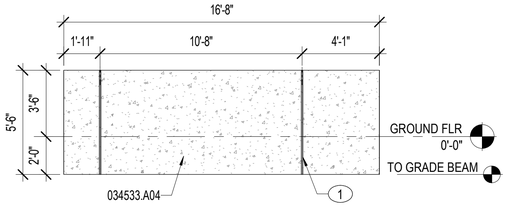

D2 331
1/4" = 1'-0"
PAE212

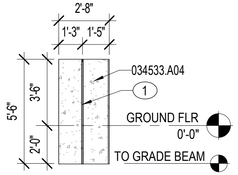

D3 332
1/4" = 1'-0"
PAE212

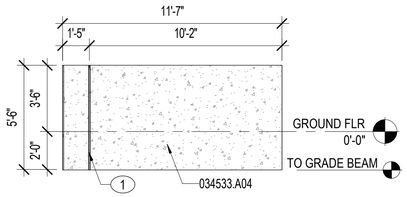

D4 333
1/4" = 1'-0"
PAE212

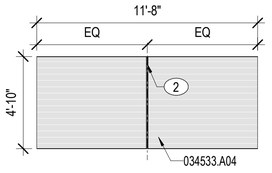

C1 318
1/4" = 1'-0"

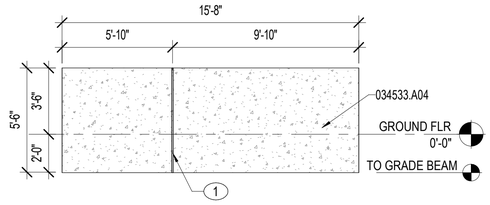

C2 334
1/4" = 1'-0"
PAE212

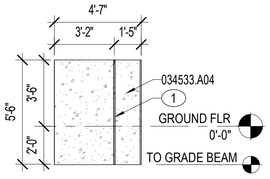

C3 335
1/4" = 1'-0"
PAE212

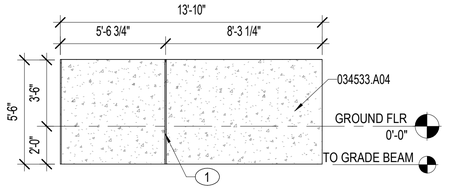

C4 336
1/4" = 1'-0"
PAE212

A1 320 (320.1 OPH)
1/4" = 1'-0"
PAE211, PAE213, PAE215

A3 321 (321.1 OPH)
1/4" = 1'-0"
PAE211

A4 322
1/4" = 1'-0"
PAE213

NOTES:

SHEET NOTES:

A REFER TO SHEET PAE001 FOR ARCHITECTURAL ABBREVIATIONS AND SYMBOLS.
B REFER TO SHEETS PAE531-PAE532 FOR TYPICAL SEALANT INSTALLATION REQUIREMENTS ON ALL PRECAST CONCRETE PANELS IN THIS PROJECT.
C REFER TO ENLARGED PANEL ELEVATIONS FOR PANEL JOINT AND TYPE LOCATIONS AND REVEAL TYPES AND LOCATIONS.
D PRECAST PANELS ARE BASED ON A 1" JOINT BETWEEN PANELS.
E PANEL ELEVATIONS ARE MEANT TO BE A DESIGN GUIDE. PRECAST MANUFACTURER TO VERIFY FINAL DIMENSIONS AND PRECAST PENETRATIONS PRIOR TO FABRICATION.
F COORDINATE DOOR, WINDOW AND OTHER OPENINGS WITH ARCHITECTURE AND ENGINEERING DRAWINGS.
G COORDINATE BOTTOM OF PANEL WITH STRUCTURAL GRADE BEAM LOCATIONS.
H THE NUMBER OF PANEL TYPES CAN BE REDUCED PER CONCRETE PANEL MANUFACTURER RECOMMENDATIONS, WITH ARCHITECT'S APPROVAL.
I COORDINATE ALL DEVICES & OPENINGS ON PRECAST PANELS.
J CENTER CONDUCTOR HEADS AND DOWNSPOUTS IN PRECAST PANELS.

KEY NOTES (00)

1 PRECAST PANEL REVEAL. SEE DETAIL B4/PAE532.
2 PRECAST CONCRETE PANEL WALL OPENING.

MATERIAL NOTES

034533.A04 PRECAST/PRESTRESSED CONCRETE WALL PANEL

EXTERIOR FINISH LEGEND		
PC-1	ARCHITECTURAL PRECAST CONCRETE SANDBLAST LIGHT - PCI 110	
PC-2	ARCHITECTURAL PRECAST CONCRETE SANDBLAST MEDIUM - PCI 110	
PC-3	ARCHITECTURAL PRECAST CONCRETE SANDBLAST LIGHT - PCI 141	

0 ½" 1" 2" 3" 4"
1'-0" = 1'-0" GRAPHIC SCALE

NOTE:
IF THIS DRAWING IS LESS THAN 34" X 22"
IT IS A REDUCED SIZE DRAWING

NO	DESCRIPTION	DATE	APPR
1	MOD P00005	05/2023	
2	MOD P00006 AND P00007	10/2025	

NAVFAC

STATE OF FLORIDA
BILLY KEITH HOLLOWAY
AR93022
REGISTERED ARCHITECT
SEAL

BAMFORTH
ENGINEERS ARCHITECTS

AE INFO

APPROVED
FOR COMMANDER NAVFAC 11/6/2025

ACTIVITY
Approved by J. Scott Roberts,
Asset Management Branch Head &
Supervisory Facility Planner, PWD
Beaufort, SC via email.

SATISFACTORY TO DATE	12/15/2022
DES EAD / DRW JAF / CHK BKH	
PMDM	KTB / RLH
BRANCH MANAGER	CGM
CHIEF ENG/ARCH	EJA
FP ENGINEER	DSN

DEPARTMENT OF THE NAVY
NAVAL FACILITIES ENGINEERING SYSTEMS COMMAND
DC CODE:
NAVAL FACILITIES ENGINEERING SYSTEMS COMMAND – MID-ATLANTIC
NORFOLK, VA
MCAS BEAUFORT
BEAUFORT, SC
P-475 AIRCRAFT MAINTENANCE HANGAR -
VOLUME 4 (PARKING GARAGE OPTION)
PARKING GARAGE - PRECAST PANEL ELEVATIONS

SCALE:	As indicated
EPROJECT NO.:	1363603
CONSTR. CONTR. NO.	
NAVFAC DRAWING NO.	12860323
SHEET 1102 OF 1412	

PAE224

DRAWFORM REVISION: 25 AUGUST 2020

Autodesk Docs://20043 MWX 563 F39 Maintenance Hangar/20043 F39 Maint Hangar_Parking Facility.rvt
11/4/2025 1:12:28 PM

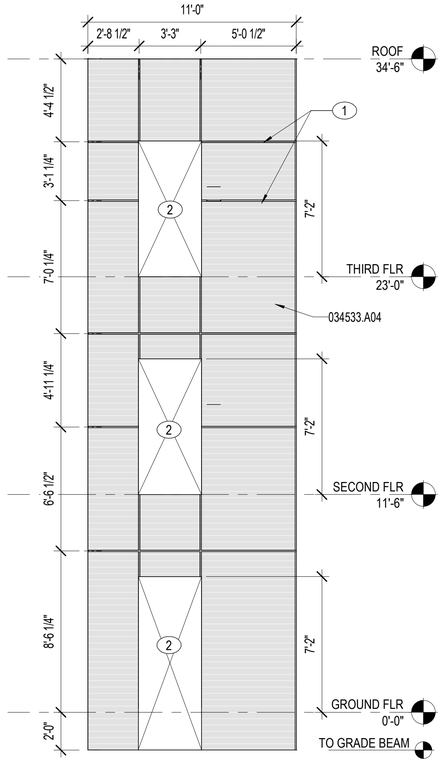

B2 323 (323.1 OPH)
1/4" = 1'-0" AE215

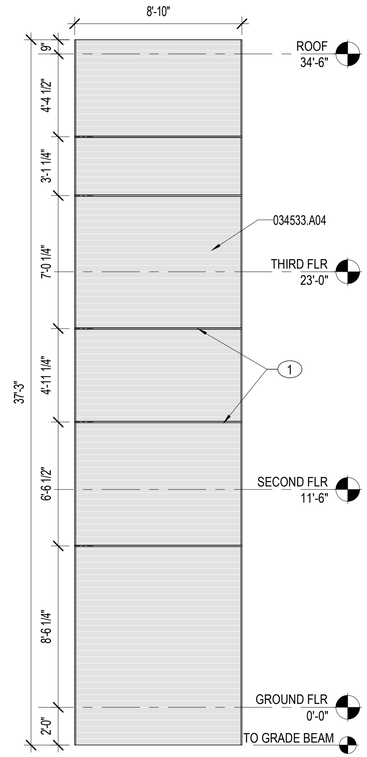

B3 325
1/4" = 1'-0" AE215

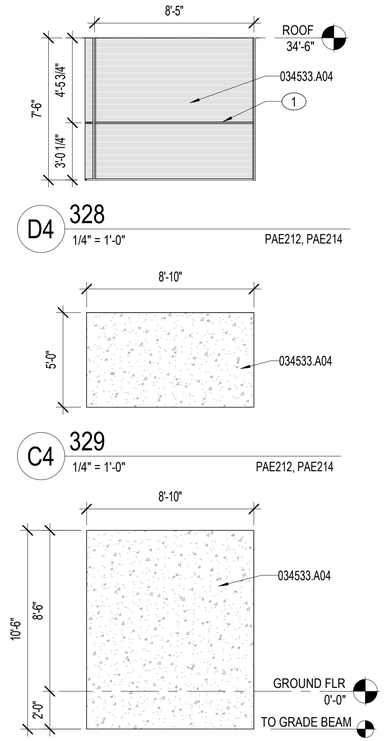

D4 328
1/4" = 1'-0" PAE212, PAE214

C4 329
1/4" = 1'-0" PAE212, PAE214

B4 330
1/4" = 1'-0" PAE212, PAE214

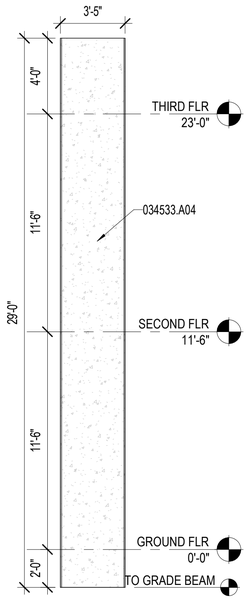

A1 350
1/4" = 1'-0" PAE215, PAE216

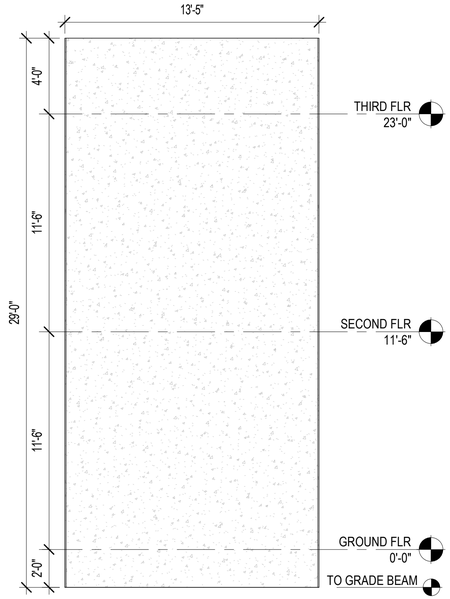

A2 351
1/4" = 1'-0" PAE215, PAE216

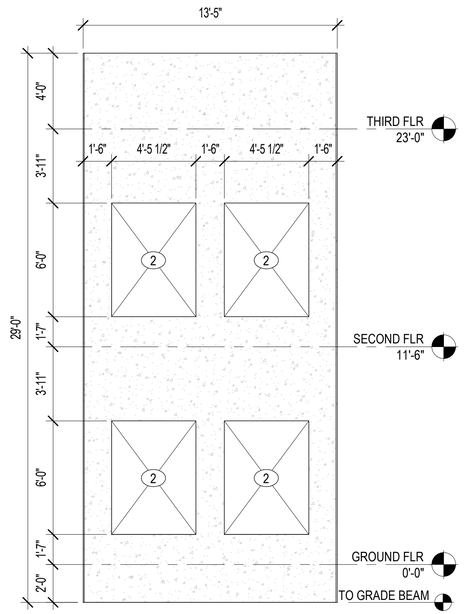

A3 352
1/4" = 1'-0" PAE216

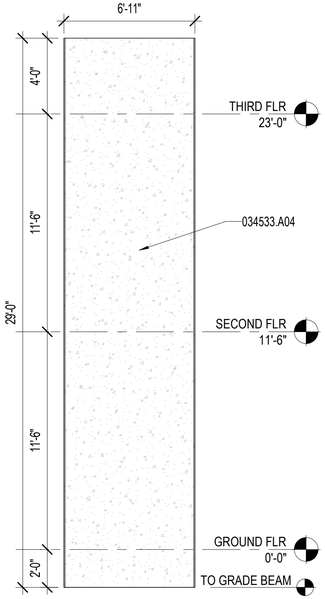

A4 353
1/4" = 1'-0" PAE215, PAE216

NOTES:

SHEET NOTES:

A REFER TO SHEET PAE001 FOR ARCHITECTURAL ABBREVIATIONS AND SYMBOLS.
B REFER TO SHEETS PAE531-PAE532 FOR TYPICAL SEALANT INSTALLATION REQUIREMENTS ON ALL PRECAST CONCRETE PANELS IN THIS PROJECT.
C REFER TO ENLARGED PANEL ELEVATIONS FOR PANEL JOINT AND TYPE LOCATIONS AND REVEAL TYPES AND LOCATIONS.
D PRECAST PANELS ARE BASED ON A 1" JOINT BETWEEN PANELS.
E PANEL ELEVATIONS ARE MEANT TO BE A DESIGN GUIDE. PRECAST MANUFACTURER TO VERIFY FINAL DIMENSIONS AND PRECAST PENETRATIONS PRIOR TO FABRICATION.
F COORDINATE DOOR, WINDOW AND OTHER OPENINGS WITH ARCHITECTURE AND ENGINEERING DRAWINGS.
G COORDINATE BOTTOM OF PANEL WITH STRUCTURAL GRADE BEAM LOCATIONS.
H THE NUMBER OF PANEL TYPES CAN BE REDUCED PER CONCRETE PANEL MANUFACTURER RECOMMENDATIONS, WITH ARCHITECT'S APPROVAL.
I COORDINATE ALL DEVICES & OPENINGS ON PRECAST PANELS.
J CENTER CONDUCTOR HEADS AND DOWNSPOUTS IN PRECAST PANELS.

KEY NOTES (00)

1 PRECAST PANEL REVEAL. SEE DETAIL B4/PAE532.
2 PRECAST CONCRETE PANEL WALL OPENING.

MATERIAL NOTES

034533.A04 PRECAST/PRESTRESSED CONCRETE WALL PANEL

EXTERIOR FINISH LEGEND

PC-1	ARCHITECTURAL PRECAST CONCRETE SANDBLAST LIGHT - PCI 110
PC-2	ARCHITECTURAL PRECAST CONCRETE SANDBLAST MEDIUM - PCI 110
PC-3	ARCHITECTURAL PRECAST CONCRETE SANDBLAST LIGHT - PCI 141

0 1' 5' 10' 15'
1/4" = 1'-0" GRAPHIC SCALE

NOTE:
IF THIS DRAWING IS LESS THAN 34" X 22"
IT IS A REDUCED SIZE DRAWING

NO	DESCRIPTION	DATE	APPR
1	MOD P00005	05/2023	
2	MOD P00006 AND P00007	10/2025	

NAVFAC

STATE OF FLORIDA
BILLY KEITH HOLLOWAY
AR93022
REGISTERED ARCHITECT
SEAL

BAMFORTH ENGINEERING ARCHITECTURE
AE INFO

APPROVED
FOR COMMANDER NAVFAC
ACTIVITY Approved by J. Scott Roberts, Asset Management Branch Head & Supervisory Facility Planner, PWD Beaufort, SC via email.
SATISFACTORY TO DATE 12/15/2022

DES	EAD	DRW MCL	CHK BKH
PM/DM			KTB / RLH
BRANCH MANAGER			CGM
CHIEF ENG/ARCH			EJA
FP ENGINEER			DSN

DEPARTMENT OF THE NAVY
NAVAL FACILITIES ENGINEERING SYSTEMS COMMAND
DC CORE
MCAS BEAUFORT
NAVAL FACILITIES ENGINEERING SYSTEMS COMMAND - MID-ATLANTIC
NORFOLK, VA
BEAUFORT, SC
P-475 AIRCRAFT MAINTENANCE HANGAR - VOLUME 4 (PARKING GARAGE OPTION)
PARKING GARAGE - PRECAST PANEL ELEVATIONS

SCALE: As indicated
EPROJECT NO.: 1363603
CONSTR. CONTR. NO.
NAVFAC DRAWING NO. 12860324
SHEET 1103 OF 1412

PAE225

DRAWFORM REVISION: 25 AUGUST 2020

Autodesk Docs://20042-MFH1 500 735 Maintenance Hangar/20042 735 Maint Hangar_Parking Facility.rvt
11/4/2025 1:12:39 PM

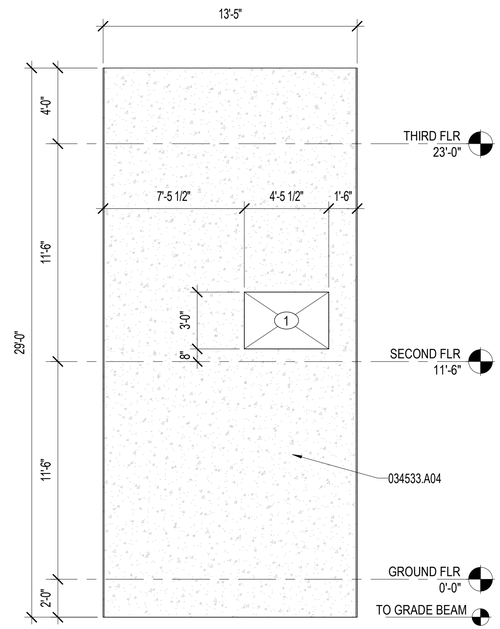

C1 354
1/4" = 1'-0"
PAE215

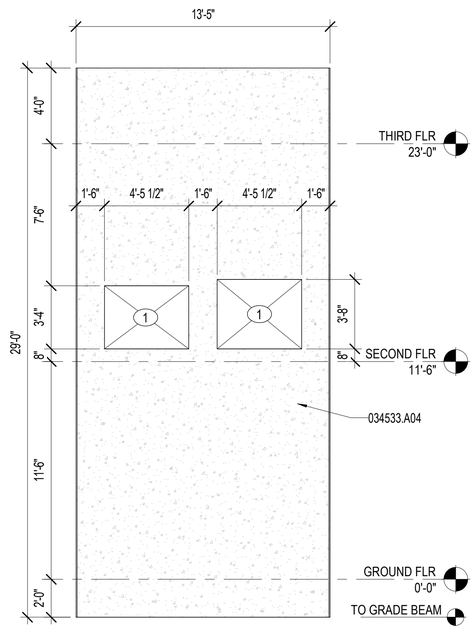

C2 355
1/4" = 1'-0"
PAE215

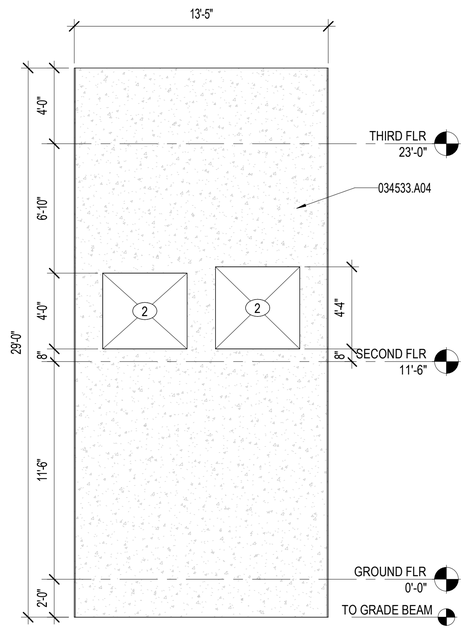

C4 356
1/4" = 1'-0"
PAE215

NOTES:

SHEET NOTES:

A REFER TO SHEET PAE001 FOR ARCHITECTURAL ABBREVIATIONS AND SYMBOLS.
B REFER TO SHEETS PAE531-PAE532 FOR TYPICAL SEALANT INSTALLATION REQUIREMENTS ON ALL PRECAST CONCRETE PANELS IN THIS PROJECT.
C REFER TO ENLARGED PANEL ELEVATIONS FOR PANEL JOINT AND TYPE LOCATIONS AND REVEAL TYPES AND LOCATIONS.
D PRECAST PANELS ARE BASED ON A 1" JOINT BETWEEN PANELS.
E PANEL ELEVATIONS ARE MEANT TO BE A DESIGN GUIDE. PRECAST MANUFACTURER TO VERIFY FINAL DIMENSIONS AND PRECAST PENETRATIONS PRIOR TO FABRICATION.
F COORDINATE DOOR, WINDOW AND OTHER OPENINGS WITH ARCHITECTURE AND ENGINEERING DRAWINGS.
G COORDINATE BOTTOM OF PANEL WITH STRUCTURAL GRADE BEAM LOCATIONS.
H THE NUMBER OF PANEL TYPES CAN BE REDUCED PER CONCRETE PANEL MANUFACTURER RECOMMENDATIONS, WITH ARCHITECT'S APPROVAL.
I COORDINATE ALL DEVICES & OPENINGS ON PRECAST PANELS.
J CENTER CONDUCTOR HEADS AND DOWNSPOUTS IN PRECAST PANELS.

KEY NOTES (00)

1 PRECAST CONCRETE PANEL WALL OPENING.

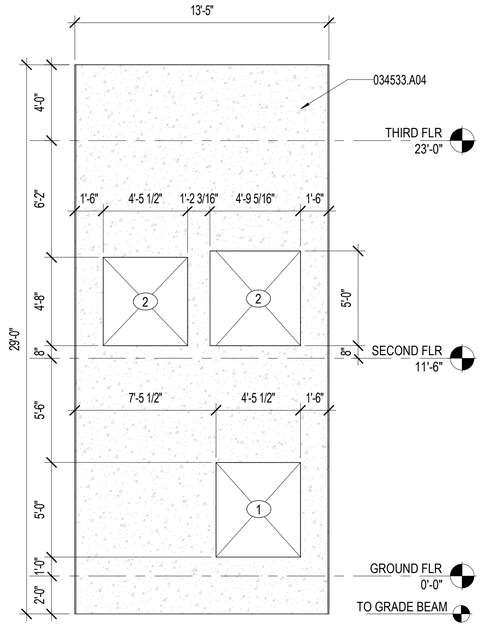

A1 357
1/4" = 1'-0"
PAE215

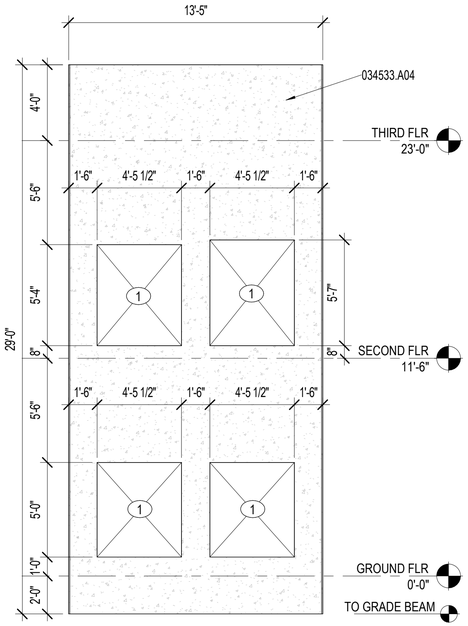

A2 358
1/4" = 1'-0"
PAE215

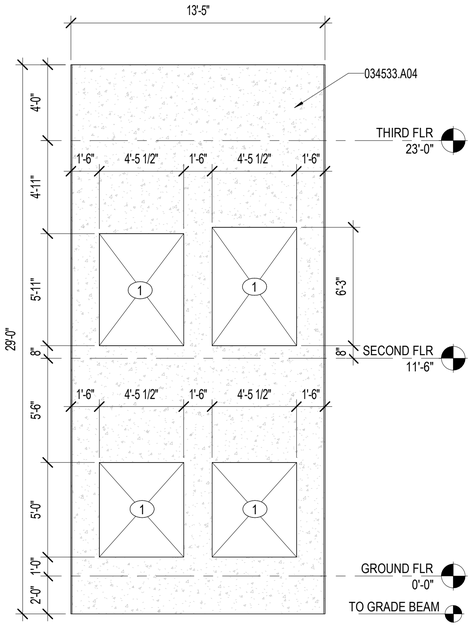

A3 359
1/4" = 1'-0"
PAE215

MATERIAL NOTES

034533.A04 PRECAST/PRESTRESSED CONCRETE WALL PANEL

EXTERIOR FINISH LEGEND		
PC-1	ARCHITECTURAL PRECAST CONCRETE SANDBLAST LIGHT - PCI 110	
PC-2	ARCHITECTURAL PRECAST CONCRETE SANDBLAST MEDIUM - PCI 110	
PC-3	ARCHITECTURAL PRECAST CONCRETE SANDBLAST LIGHT - PCI 141	

0 1' 5' 10' 15'
1/4" = 1'-0" GRAPHIC SCALE

NOTE:
IF THIS DRAWING IS LESS THAN 34" X 22"
IT IS A REDUCED SIZE DRAWING

NO	DESCRIPTION	DATE	APPR
1	MOD P00005	05/2023	
2	MOD P00006 AND P00007	10/2025	

NAVFAC

STATE OF FLORIDA
BILLY KEITH HOLLOWAY
AR93022
REGISTERED ARCHITECT
SEAL

BAMFORTH
ENGINEERS ARCHITECTS
AE INFO

APPROVED
FOR COMMANDER NAVFAC 11/6/2025
ACTIVITY
Approved by J. Scott Roberts,
Asset Management Branch Head &
Supervisory Facility Planner, PWD
Beaufort, SC via email.

SATISFACTORY TO DATE	12/15/2022
DES EAD / DRW RWR / CHK BKH	
PM/DM	KTB / RLH
BRANCH MANAGER	CGM
CHIEF ENG/ARCH	EJA
FP ENGINEER	DSN

DEPARTMENT OF THE NAVY
NAVAL FACILITIES ENGINEERING SYSTEMS COMMAND
DC CODE:
MCAS BEAUFORT
NAVAL FACILITIES ENGINEERING SYSTEMS COMMAND ~ MID-ATLANTIC
NORFOLK, VA
BEAUFORT, SC
P-475 AIRCRAFT MAINTENANCE HANGAR - VOLUME 4 (PARKING GARAGE OPTION)
PARKING GARAGE - PRECAST PANEL ELEVATIONS

SCALE:	As indicated
EPROJECT NO.:	1363603
CONSTR. CONTR. NO.	
NAVFAC DRAWING NO.	12860325
SHEET	1104 OF 1412

PAE226

DRAWFORM REVISION: 25 AUGUST 2020

Autodesk Docs://20043 MFAT 103 F35 Maintenance Hangar/20043 F35 Maint Hangar_Parking Facility.rvt
11/4/2025 1:12:43 PM

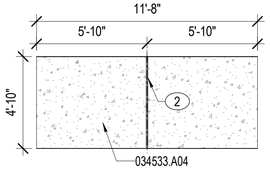

C1 370
1/4" = 1'-0"

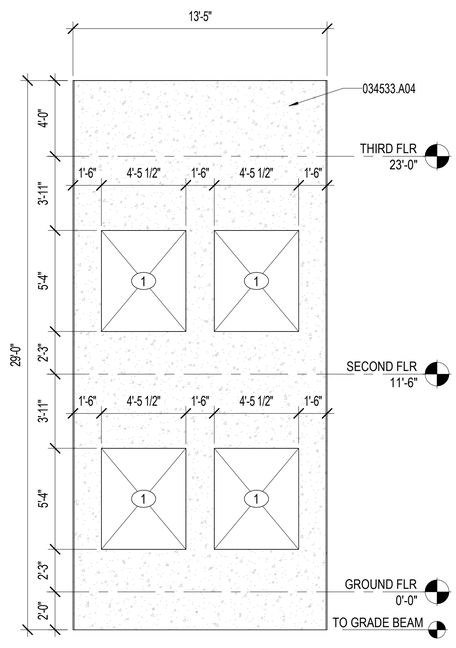

C2 360
1/4" = 1'-0"
PAE216

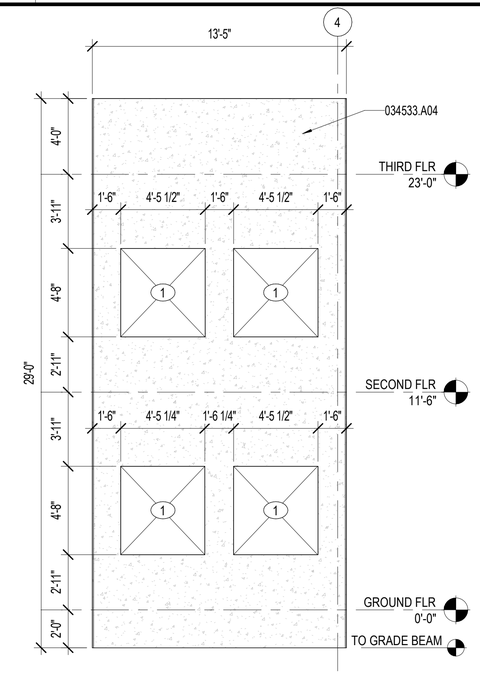

C3 361
1/4" = 1'-0"
PAE216

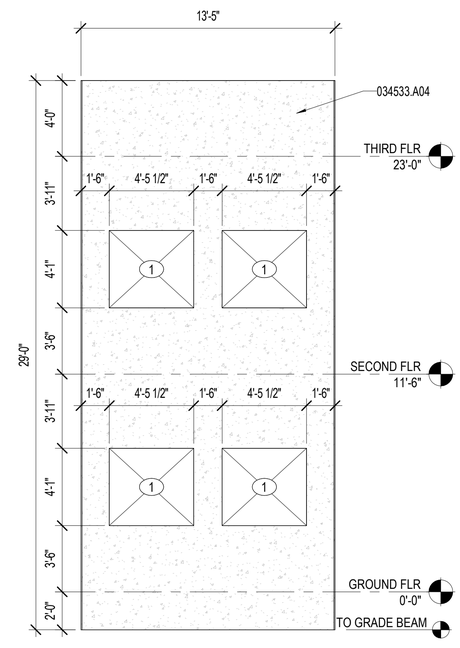

C4 362
1/4" = 1'-0"
PAE216

NOTES:

SHEET NOTES:

A REFER TO SHEET PAE001 FOR ARCHITECTURAL ABBREVIATIONS AND SYMBOLS.
B REFER TO SHEETS PAE531-PAE532 FOR TYPICAL SEALANT INSTALLATION REQUIREMENTS ON ALL PRECAST CONCRETE PANELS IN THIS PROJECT.
C REFER TO ENLARGED PANEL ELEVATIONS FOR PANEL JOINT AND TYPE LOCATIONS AND REVEAL TYPES AND LOCATIONS.
D PRECAST PANELS ARE BASED ON A 1" JOINT BETWEEN PANELS.
E PANEL ELEVATIONS ARE MEANT TO BE A DESIGN GUIDE. PRECAST MANUFACTURER TO VERIFY FINAL DIMENSIONS AND PRECAST PENETRATIONS PRIOR TO FABRICATION.
F COORDINATE DOOR, WINDOW AND OTHER OPENINGS WITH ARCHITECTURE AND ENGINEERING DRAWINGS.
G COORDINATE BOTTOM OF PANEL WITH STRUCTURAL GRADE BEAM LOCATIONS.
H THE NUMBER OF PANEL TYPES CAN BE REDUCED PER CONCRETE PANEL MANUFACTURER RECOMMENDATIONS, WITH ARCHITECT'S APPROVAL.
I COORDINATE ALL DEVICES & OPENINGS ON PRECAST PANELS.
J CENTER CONDUCTOR HEADS AND DOWNSPOUTS IN PRECAST PANELS.

KEY NOTES (00)

1 PRECAST CONCRETE PANEL WALL OPENING.
2 PRECAST PANEL REVEAL. SEE DETAIL B4/PAE532.

MATERIAL NOTES

034533.A04 PRECAST/PRESTRESSED CONCRETE WALL PANEL

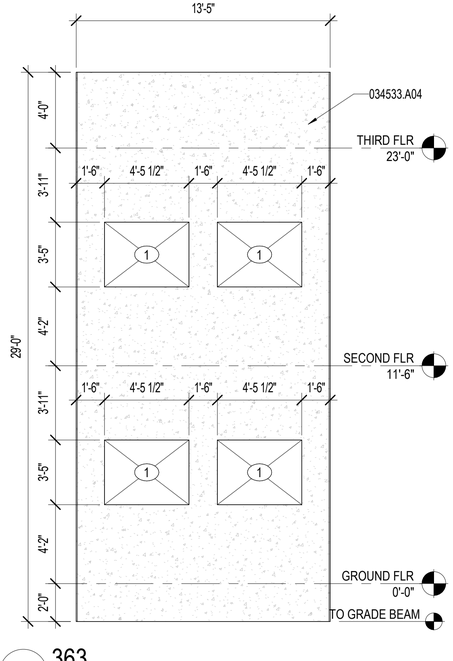

A1 363
1/4" = 1'-0"
PAE216

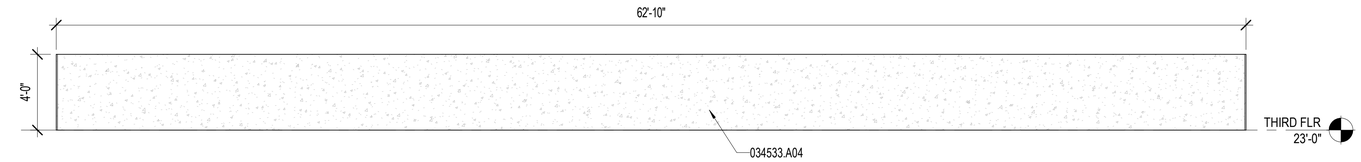

B2 364
1/4" = 1'-0"
PAE216

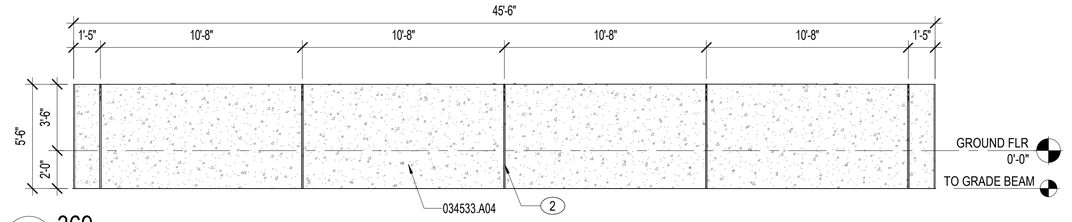

A2 369
1/4" = 1'-0"
PAE212

EXTERIOR FINISH LEGEND		
PC-1	ARCHITECTURAL PRECAST CONCRETE SANDBLAST LIGHT - PCI 110	
PC-2	ARCHITECTURAL PRECAST CONCRETE SANDBLAST MEDIUM - PCI 110	
PC-3	ARCHITECTURAL PRECAST CONCRETE SANDBLAST LIGHT - PCI 141	

0 1' 5' 10' 15'
1/4" = 1'-0" GRAPHIC SCALE

NOTE:
IF THIS DRAWING IS LESS THAN 34" X 22"
IT IS A REDUCED SIZE DRAWING

NO	DESCRIPTION	DATE	APPR
1	MOD P00005	05/2023	
2	MOD P00006 AND P00007	10/2025	

NAVFAC

STATE OF FLORIDA
BILLY KEITH HOLLOWAY
AR93022
REGISTERED ARCHITECT
SEAL

BAMFORTH
ENGINEERING ARCHITECTURE

AE INFO

APPROVED
FOR COMMANDER NAVFAC 11/6/2025

ACTIVITY
Approved by J. Scott Roberts,
Asset Management Branch Head &
Supervisory Facility Planner, PWD
Beaufort, SC via email.

SATISFACTORY TO DATE 12/15/2022

DES	EAD	DRW	RWR	CHK	BKH
PM/DM					KTB / RLH
BRANCH MANAGER					CGM
CHIEF ENG/ARCH					EJA
FP ENGINEER					DSN

DEPARTMENT OF THE NAVY
NAVAL FACILITIES ENGINEERING SYSTEMS COMMAND
DC CORE
MCAS BEAUFORT

NAVAL FACILITIES ENGINEERING SYSTEMS COMMAND ~ MID-ATLANTIC
NORFOLK, VA

BEAUFORT, SC

P-475 AIRCRAFT MAINTENANCE HANGAR -
VOLUME 4 (PARKING GARAGE OPTION)

PARKING GARAGE - PRECAST PANEL ELEVATIONS

SCALE:	As indicated
EPROJECT NO.:	1363603
CONSTR. CONTR. NO.	
NAVFAC DRAWING NO.	12860326
SHEET	1105 OF 1412

PAE227

DRAWFORM REVISION 25 AUGUST 2020

Autodesk Docs://20043 MFAT 102 F35 Maintenance Hangar/20043 F35 Maint Hangar_Parking Facility.rvt
11/4/2025 1:12:46 PM

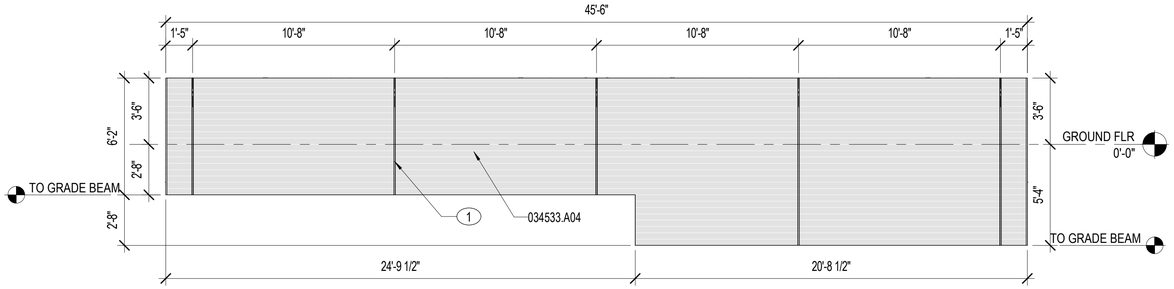

D1 365
1/4" = 1'-0"
PAE214

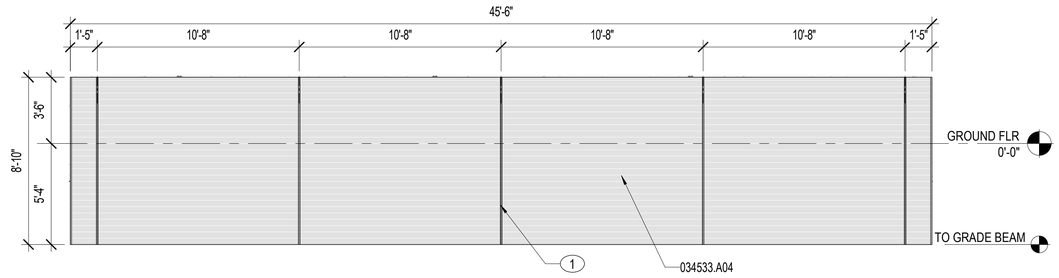

C1 366
1/4" = 1'-0"
PAE214

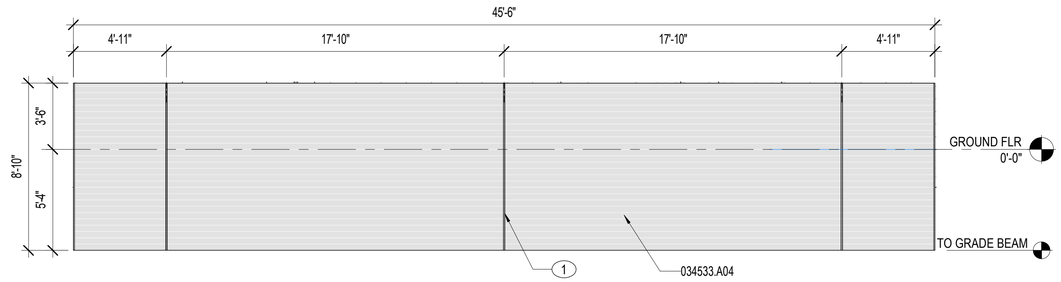

B1 367
1/4" = 1'-0"
PAE214

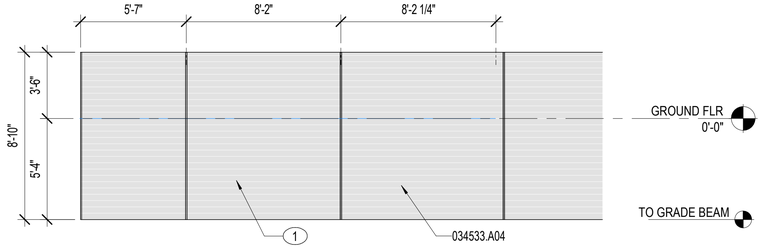

A1 368
1/4" = 1'-0"
PAE214

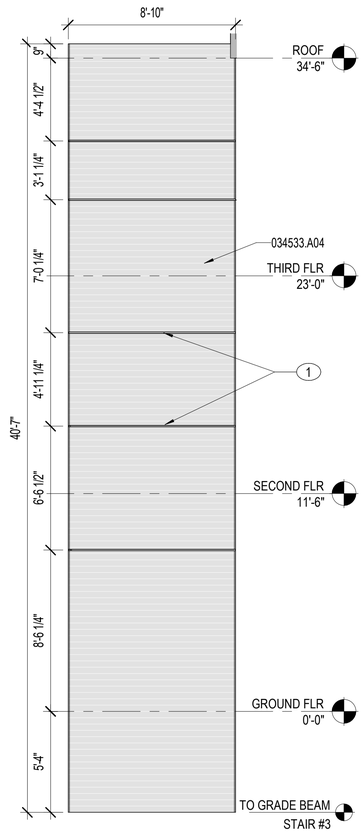

B4 325.3
1/4" = 1'-0"
PAE213

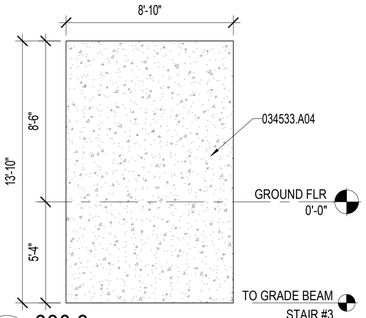

A4 330.3
1/4" = 1'-0"
PAE214

NOTES:

SHEET NOTES:

A REFER TO SHEET PAE001 FOR ARCHITECTURAL ABBREVIATIONS AND SYMBOLS.
B REFER TO SHEETS PAE531-PAE532 FOR TYPICAL SEALANT INSTALLATION REQUIREMENTS ON ALL PRECAST CONCRETE PANELS IN THIS PROJECT.
C REFER TO ENLARGED PANEL ELEVATIONS FOR PANEL JOINT AND TYPE LOCATIONS AND REVEAL TYPES AND LOCATIONS.
D PRECAST PANELS ARE BASED ON A 1" JOINT BETWEEN PANELS.
E PANEL ELEVATIONS ARE MEANT TO BE A DESIGN GUIDE. PRECAST MANUFACTURER TO VERIFY FINAL DIMENSIONS AND PRECAST PENETRATIONS PRIOR TO FABRICATION.
F COORDINATE DOOR, WINDOW AND OTHER OPENINGS WITH ARCHITECTURE AND ENGINEERING DRAWINGS.
G COORDINATE BOTTOM OF PANEL WITH STRUCTURAL GRADE BEAM LOCATIONS.
H THE NUMBER OF PANEL TYPES CAN BE REDUCED PER CONCRETE PANEL MANUFACTURER RECOMMENDATIONS, WITH ARCHITECT'S APPROVAL.
I COORDINATE ALL DEVICES & OPENINGS ON PRECAST PANELS.
J CENTER CONDUCTOR HEADS AND DOWNSPOUTS IN PRECAST PANELS.

KEY NOTES (00)

1 PRECAST PANEL REVEAL. SEE DETAIL B4/PAE532.

MATERIAL NOTES

034533.A04 PRECAST/PRESTRESSED CONCRETE WALL PANEL

EXTERIOR FINISH LEGEND

PC-1	ARCHITECTURAL PRECAST CONCRETE SANDBLAST LIGHT - PCI 110	
PC-2	ARCHITECTURAL PRECAST CONCRETE SANDBLAST MEDIUM - PCI 110	
PC-3	ARCHITECTURAL PRECAST CONCRETE SANDBLAST LIGHT - PCI 141	

0 1' 5' 10' 15'
1/4" = 1'-0" GRAPHIC SCALE

NOTE:
IF THIS DRAWING IS LESS THAN 34" X 22"
IT IS A REDUCED SIZE DRAWING

NO	DESCRIPTION	DATE	APPR
1	MOD P00005	05/2023	
2	MOD P00006 AND P00007	10/2025	

NAVFAC

STATE OF FLORIDA
BILLY KEITH HOLLOWAY
AR93022
REGISTERED ARCHITECT
SEAL

BAMFORTH
ENGINEERING ARCHITECTURE
AE INFO

APPROVED
FOR COMMANDER NAVFAC 11/6/2025
ACTIVITY
Approved by J. Scott Roberts,
Asset Management Branch Head &
Supervisory Facility Planner, PWD
Beaufort, SC via email.

SATISFACTORY TO DATE	12/15/2022
DES EAD / DRW RWR / CHK BKH	
PM/DM	KTB / RLH
BRANCH MANAGER	CGM
CHIEF ENG/ARCH	EJA
FP ENGINEER	DSN

DEPARTMENT OF THE NAVY
NAVAL FACILITIES ENGINEERING SYSTEMS COMMAND
DC CODE:
MCAS BEAUFORT

NAVAL FACILITIES ENGINEERING SYSTEMS COMMAND ~ MID-ATLANTIC
NORFOLK, VA

BEAUFORT, SC

P-475 AIRCRAFT MAINTENANCE HANGAR - VOLUME 4 (PARKING GARAGE OPTION)

PARKING GARAGE - PRECAST PANEL ELEVATIONS

SCALE:	As indicated
EPROJECT NO.:	1363603
CONSTR. CONTR. NO.	
NAVFAC DRAWING NO.:	12860327
SHEET	1106 OF 1412

PAE228

DRAWFORM REVISION: 25 AUGUST 2020

Autodesk Docs://20043 MIFAT 103 F35 Maintenance Hangar/20043 F35 Maint Hangar_Parking Facility.rvt
11/4/2025 1:12:50 PM

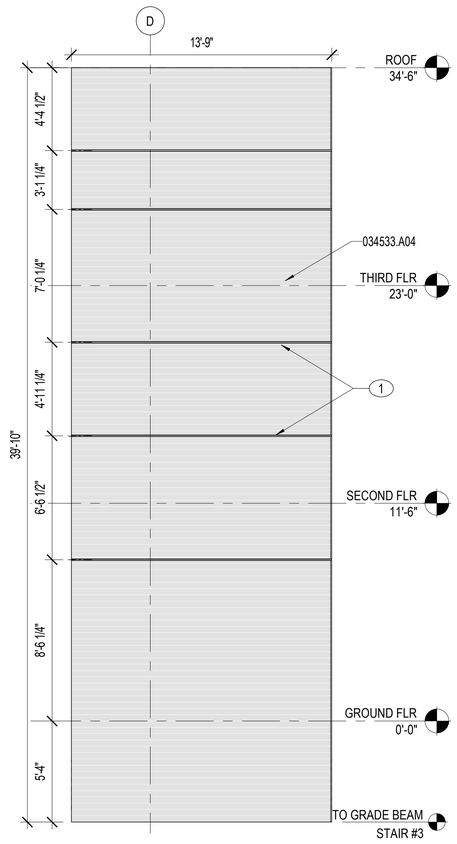

B2 320.3 (320.4 OPH)
1/4" = 1'-0" PAE213

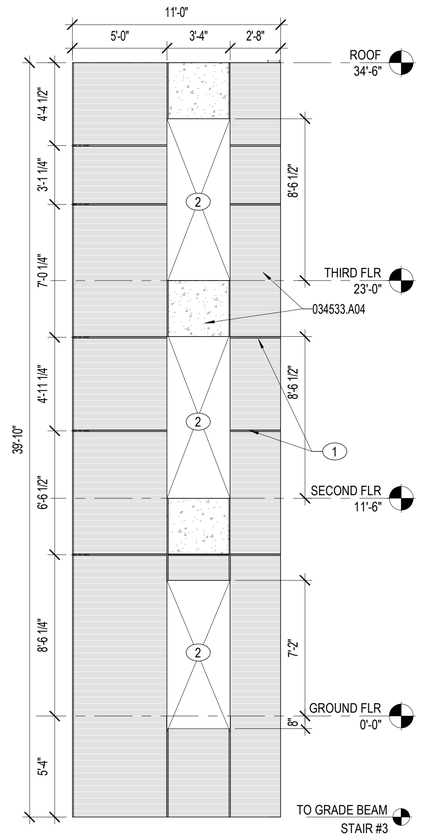

B3 321.3
1/4" = 1'-0" PAE213

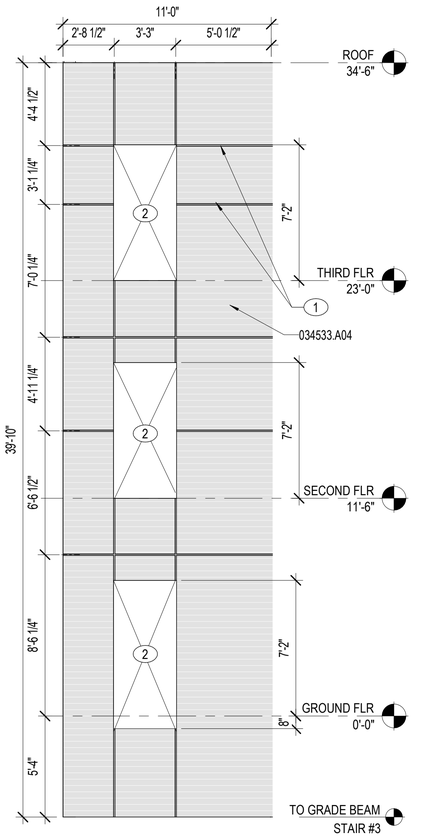

B4 323.3
1/4" = 1'-0" PAE213

NOTES:

SHEET NOTES:

A REFER TO SHEET PAE001 FOR ARCHITECTURAL ABBREVIATIONS AND SYMBOLS.
B REFER TO SHEETS PAE531-PAE532 FOR TYPICAL SEALANT INSTALLATION REQUIREMENTS ON ALL PRECAST CONCRETE PANELS IN THIS PROJECT.
C REFER TO ENLARGED PANEL ELEVATIONS FOR PANEL JOINT AND TYPE LOCATIONS AND REVEAL TYPES AND LOCATIONS.
D PRECAST PANELS ARE BASED ON A 1" JOINT BETWEEN PANELS.
E PANEL ELEVATIONS ARE MEANT TO BE A DESIGN GUIDE. PRECAST MANUFACTURER TO VERIFY FINAL DIMENSIONS AND PRECAST PENETRATIONS PRIOR TO FABRICATION.
F COORDINATE DOOR, WINDOW AND OTHER OPENINGS WITH ARCHITECTURE AND ENGINEERING DRAWINGS.
G COORDINATE BOTTOM OF PANEL WITH STRUCTURAL GRADE BEAM LOCATIONS.
H THE NUMBER OF PANEL TYPES CAN BE REDUCED PER CONCRETE PANEL MANUFACTURER RECOMMENDATIONS, WITH ARCHITECT'S APPROVAL.
I COORDINATE ALL DEVICES & OPENINGS ON PRECAST PANELS.
J CENTER CONDUCTOR HEADS AND DOWNSPOUTS IN PRECAST PANELS.

KEY NOTES (00)

1 PRECAST PANEL REVEAL. SEE DETAIL B4/PAE532.
2 PRECAST CONCRETE PANEL WALL OPENING.

MATERIAL NOTES

034533.A04 PRECAST/PRESTRESSED CONCRETE WALL PANEL

EXTERIOR FINISH LEGEND		
PC-1	ARCHITECTURAL PRECAST CONCRETE SANDBLAST LIGHT - PCI 110	
PC-2	ARCHITECTURAL PRECAST CONCRETE SANDBLAST MEDIUM - PCI 110	
PC-3	ARCHITECTURAL PRECAST CONCRETE SANDBLAST LIGHT - PCI 141	

0 1' 5' 10' 15'
1/4" = 1'-0" GRAPHIC SCALE

NOTE:
IF THIS DRAWING IS LESS THAN 34" X 22"
IT IS A REDUCED SIZE DRAWING

APPR	DATE	MK	DESCRIPTION
	05/2023	1	MOD P00005
	10/2025	2	MOD P00006 AND P00007

NAVFAC

STATE OF FLORIDA
BILLY KEITH HOLLOWAY
AR93022
REGISTERED ARCHITECT
SEAL

BAMFORTH
ENGINEERING ARCHITECTURE
AE INFO

APPROVED
FOR COMMANDER NAVFAC 11/6/2025
ACTIVITY
Approved by J. Scott Roberts,
Asset Management Branch Head &
Supervisory Facility Planner, PWD
Beaufort, SC via email.

SATISFACTORY TO DATE	12/15/2022
DES EAD / DRW RWR / CHK BKH	
PM/DM	KTB / RLH
BRANCH MANAGER	CGM
CHIEF ENG/ARCH	EJA
FP ENGINEER	DSN

DEPARTMENT OF THE NAVY
NAVAL FACILITIES ENGINEERING SYSTEMS COMMAND
DC CORE
MCAS BEAUFORT
NAVAL FACILITIES ENGINEERING SYSTEMS COMMAND ~ MID-ATLANTIC
NORFOLK, VA
BEAUFORT, SC
P-475 AIRCRAFT MAINTENANCE HANGAR - VOLUME 4 (PARKING GARAGE OPTION)
PARKING GARAGE - PRECAST PANEL ELEVATIONS

SCALE:	As indicated
EPROJECT NO.:	1363603
CONSTR. CONTR. NO.	
NAVFAC DRAWING NO.:	12860328
SHEET 1107 OF 1412	

PAE229

DRAWFORM REVISION: 25 AUGUST 2020

Autodesk Docs://20043 MAFAT 103 F35 Maintenance Hangar/20043 F35 Maint Hangar_Parking Facility.rvt
11/4/2025 1:12:32 PM

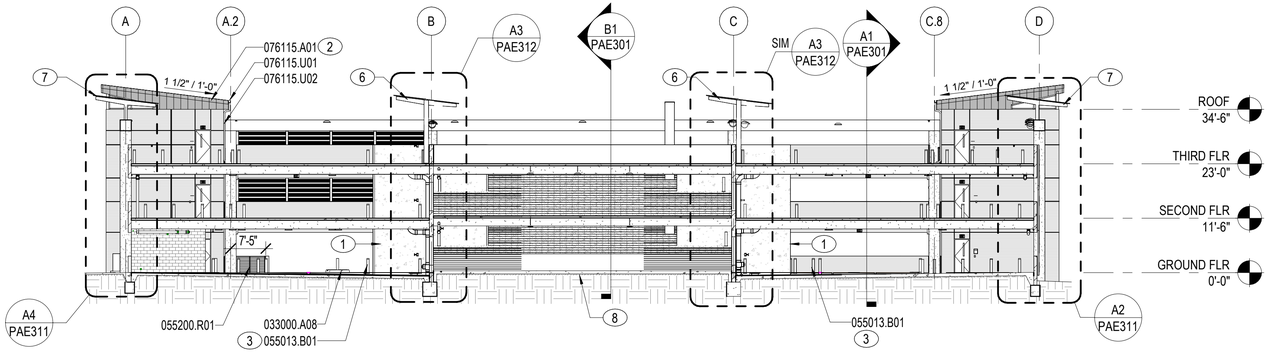

C1 BUILDING SECTION

1/16" = 1'-0"

PAE101, PAE102, PAE103, PAE104, PAE201, PAE212, PAE214, PAE301

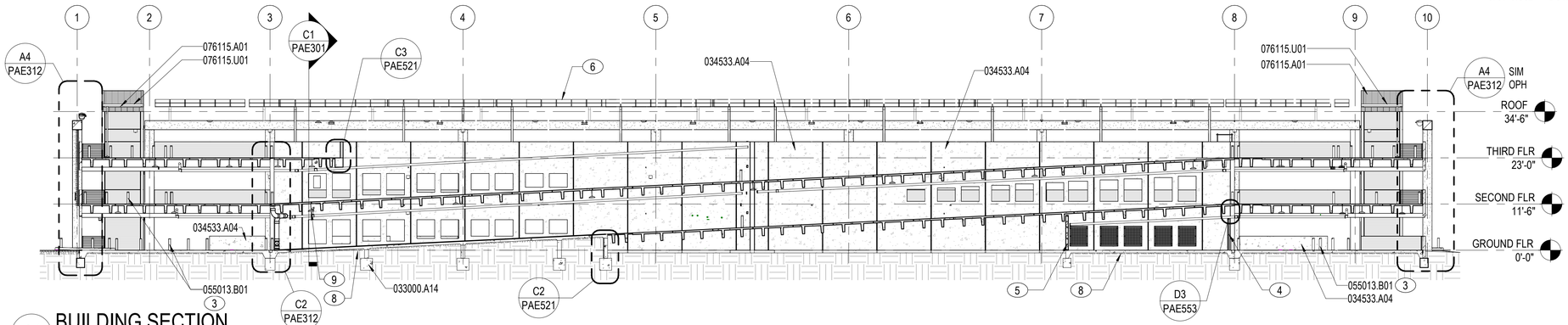

B1 BUILDING SECTION

1/16" = 1'-0"

PAE101, PAE102, PAE103, PAE104, PAE201, PAE211, PAE213, PAE301

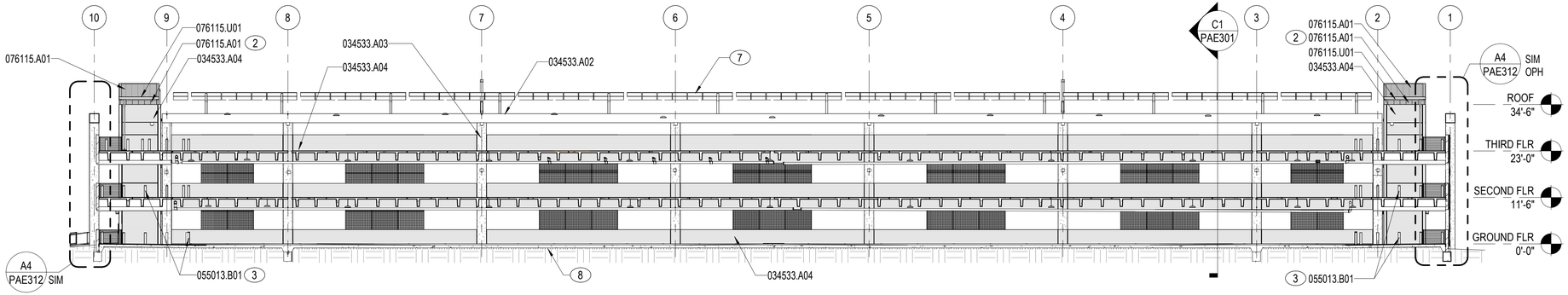

A1 BUILDING SECTION

1/16" = 1'-0"

PAE101, PAE102, PAE103, PAE104, PAE201, PAE211, PAE213, PAE301

KEY NOTES (00)

1 SHEAR WALL.
2 STANDING SEAM METAL ROOF PANEL IN VERTICAL APPLICATION.
3 SURFACE MOUNTED, REMOVABLE, PEDESTAL BOLLARD, TYP. REFER TO DETAIL A2/PAE553.
4 8' HIGH GALVANIZED CHAIN LINK FENCE WITH 6' DOUBLE SLIDING GATE OPENING, SPACE POSTS AT 8'-0" OC MAX. REFER TO ADDITIONAL DETAILS ON PAE553.
5 8" CMU PARTITION. REFER TO SHEET PSF501, DETAIL C2/PSB412, AND DETAIL A1/PAE522 FOR ADDITIONAL INFORMATION.
6 ALUMINUM CANOPY SYSTEM WITH INTEGRAL DRAINAGE FOR PHOTOVOLTAIC PANEL. PROVIDE IF PARKING GARAGE PV PANEL OPTION IS AWARDED. REFER TO DETAIL A1/PAE582. REFER TO ELECTRICAL DRAWINGS PEP103A-PEP103B FOR PHOTOVOLTAIC PANEL SYSTEM INFORMATION.
7 ALUMINUM CANOPY SYSTEM WITH INTEGRAL DRAINAGE FOR PHOTOVOLTAIC PANEL. PROVIDE IF PARKING GARAGE PV PANEL OPTION IS AWARDED. REFER TO DETAIL A3/PAE582. REFER TO ELECTRICAL DRAWINGS PEP103A-PEP103B FOR PHOTOVOLTAIC PANEL SYSTEM INFORMATION.
8 4" POROUS FILL.
9 LIGHT FIXTURE. REFER TO SHEETS PEL101, PEL102, AND PEL103 FOR ADDITIONAL INFORMATION.

NOTES:

SHEET NOTES:

A REFER TO SHEET PAE001 FOR ARCHITECTURAL ABBREVIATIONS AND SYMBOLS.
B ARCHITECTURAL ELEVATION FOR GROUND FLOOR TOP OF SLAB IS DEFINED AS 0'-0". REFER TO VOLUME 1, SHEETS CG101-CG102 FOR SLAB ELEVATIONS RELATIVE TO NORTH AMERICAN VERTICAL DATUM (NAVD) SYSTEM.
C FOR ALL ROOF INSULATION, PROVIDE AN R-VALUE EQUAL TO R-25 MINIMUM CONTINUOUS INSULATION. INSULATION FOR DESIGN PURPOSES IS BASED ON 1" POLYISOCYANURATE INSULATION = R-6.
D SLOPED ROOF COMPOSITION IS AN ALUMINUM STANDING SEAM METAL ROOFING PANEL ON 5/8" GLASS MAT COVER BOARD OVER AND BELOW THE 4" POLYISOCYANURATE RIGID BOARD INSULATION ON METAL DECK. REFER TO SPECIFICATION SECTION 07 61 15. REFER TO STRUCTURAL DRAWINGS FOR DECK INFORMATION.
E REFER TO SHEET PAE581 FOR STANDING SEAM METAL ROOFING DETAILS.
F REFER TO VOLUME 1, SHEETS CS101-CS102, CG101-CG102, AND CG105-CG106 FOR CIVIL SITE INFORMATION.
G REFER TO VOLUME 1, SHEET AS100 FOR OVERALL ARCHITECTURAL SITE PLAN INFORMATION.
H REFER TO SHEETS PAE201 THROUGH PAE229 FOR EXTERIOR PRECAST INFORMATION.
I REFER TO SHEET PAE104Z FOR PLAN WITHOUT THE PHOTOVOLTAIC (PV) OPTION.

MATERIAL NOTES

033000.A08	CONCRETE CURB
033000.A14	GRADE BEAM
034533.A02	PRECAST/PRESTRESSED CONCRETE BEAM
034533.A03	PRECAST/PRESTRESSED CONCRETE COLUMN
034533.A04	PRECAST/PRESTRESSED CONCRETE WALL PANEL
055013.B01	STEEL BOLLARD
055200.R01	STEEL GUARDRAIL
076115.A01	STANDING-SEAM METAL ROOF PANEL
076115.U01	GUTTER
076115.U02	DOWNSPOUT

0 10' 20' 40' 60'
1/16" = 1'-0" GRAPHIC SCALE

NOTE:
IF THIS DRAWING IS LESS THAN 34" X 22"
IT IS A REDUCED SIZE DRAWING

NUM	DESCRIPTION	DATE	APPR
1	MOD P00005	05/2023	
2	MOD P00006 AND P00007	10/2025	

NAVFAC

STATE OF FLORIDA
BILLY KEITH HOLLOWAY
AR93022
REGISTERED ARCHITECT
SEAL

BAMFORTH
ENGINEERS + SURVEYORS
AE INFO

APPROVED
FOR COMMANDER NAVFAC 11/21/2025
ACTIVITY Approved by J. Scott Roberts, Asset Management Branch Head & Supervisory Facility Planner, PWD Beaufort, SC via email.
SATISFACTORY TO DATE 12/15/2022

DES	EAD	DRW	JAF	CHK	BKH
PM/DM					KTB / RLH
BRANCH MANAGER					CGM
CHIEF ENG/ARCH					EJA
FP ENGINEER					DSN

DEPARTMENT OF THE NAVY
NAVAL FACILITIES ENGINEERING SYSTEMS COMMAND
DO: CORE
NAVAL FACILITIES ENGINEERING SYSTEMS COMMAND - MID-ATLANTIC
NORFOLK, VA
MCAS BEAUFORT
BEAUFORT, SC
P-475 AIRCRAFT MAINTENANCE HANGAR - VOLUME 4 (PARKING GARAGE OPTION)
PARKING GARAGE - BUILDING SECTIONS

SCALE:	1/16" = 1'-0"
EPROJECT NO.:	1363603
CONSTR. CONTR. NO.	
NAVFAC DRAWING NO.	12860329
SHEET	1108 OF 1412

PAE301

DRAWFORM REVISION: 25 AUGUST 2020

Autodesk Docs://20042 USMTF 500 F35 Maintenance Hangar/20042 F35 Maint Hangar_Parking Facility.rvt
11/5/2025 2:40:02 PM

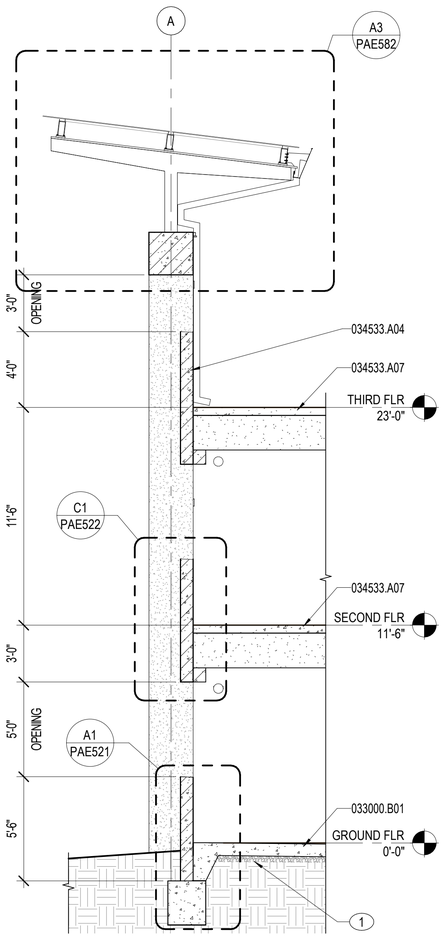

A1 WALL SECTION

1/4" = 1'-0"

PAE101, PAE102, PAE103, PAE104, PAE201, PAE212

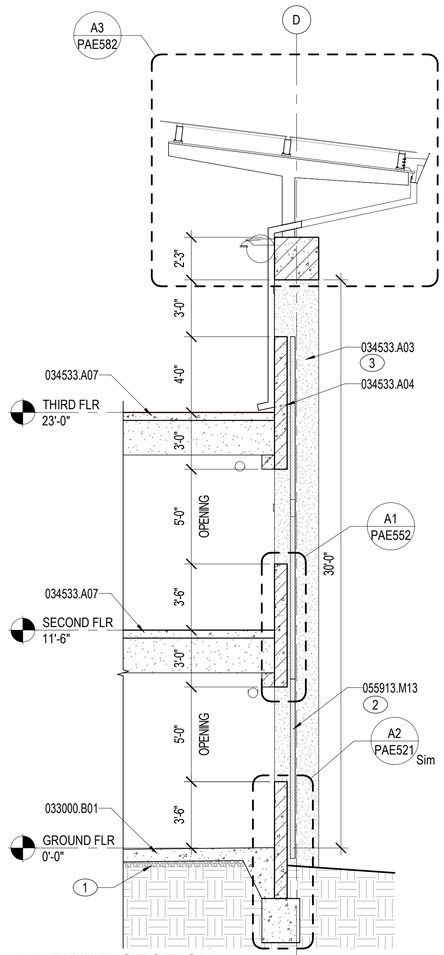

A2 WALL SECTION

1/4" = 1'-0"

PAE301

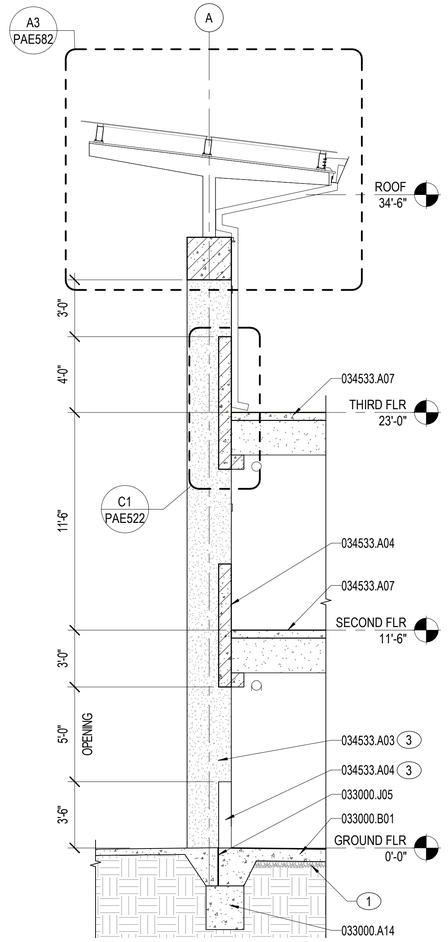

A4 WALL SECTION

1/4" = 1'-0"

PAE301

NOTES:

SHEET NOTES:

A REFER TO SHEET PAE001 FOR ARCHITECTURAL ABBREVIATIONS AND SYMBOLS.

B ARCHITECTURAL ELEVATION FOR GROUND FLOOR TOP OF SLAB IS DEFINED AS 0'-0". REFER TO VOLUME 1, SHEETS CG101-CG102 FOR SLAB ELEVATIONS RELATIVE TO NORTH AMERICAN VERTICAL DATUM (NAVD) SYSTEM.

C FOR ALL ROOF INSULATION, PROVIDE AN R-VALUE EQUAL TO R-25 MINIMUM CONTINUOUS INSULATION. INSULATION FOR DESIGN PURPOSES IS BASED ON 1" POLYISOCYANURATE INSULATION = R-6.

D SLOPED ROOF COMPOSITION IS AN ALUMINUM STANDING SEAM METAL ROOFING PANEL ON 5/8" GLASS MAT COVER BOARD OVER AND BELOW THE 4" POLYISOCYANURATE RIGID BOARD INSULATION ON METAL DECK. REFER TO SPECIFICATION SECTION 07 61 15. REFER TO STRUCTURAL DRAWINGS FOR DECK INFORMATION.

E REFER TO SHEET PAE581 FOR STANDING SEAM METAL ROOFING DETAILS.

F REFER TO VOLUME 1, SHEETS CS101-CS102, CG101-CG102, AND CG105-CG106 FOR CIVIL SITE INFORMATION.

G REFER TO VOLUME 1, SHEET AS100 FOR OVERALL ARCHITECTURAL SITE PLAN INFORMATION.

H REFER TO SHEET PAE104Z FOR PLAN WITHOUT THE PHOTOVOLTAIC (PV) OPTION.

KEY NOTES (00)

1 4" POROUS FILL.

2 WELDED WIRE PANEL PLANT SUPPORT SYSTEM. REFER TO SHEET PAE552 FOR ADDITIONAL INFORMATION.

3 BEYOND.

MATERIAL NOTES

033000.A14	GRADE BEAM
033000.B01	CONCRETE SLAB
033000.J05	PREFORMED JOINT FILLER
034533.A03	PRECAST/PRESTRESSED CONCRETE COLUMN
034533.A04	PRECAST/PRESTRESSED CONCRETE WALL PANEL
034533.A07	PRECAST/PRESTRESSED CONCRETE FLOOR DOUBLE TEE
055913.M13	EXTERIOR TRELLIS

INSULATION SCHEDULE

LOCATION	MATERIAL	TYPE	THICKNESS	MIN. R-VALUE
ROOF	072113.R10	RIGID	4"	R-24
WALL	PRECAST MFR.	RIGID	4"	R-24
WALL	072116.R10	BATT	0' - 3 5/8"	R-13.8
UNDERSLAB	072112.R02	RIGID	0' - 3 5/8"	R-18

NOTES:
1. THICKNESS VARIES WITH INSULATION TYPE
2. VALUE OF R-6 PER INCH USED FOR CALCULATION OF TOTAL MIN. R VALUE FOR RIGID INSULATION
3. VALUE OF R-3.8 PER INCH USED FOR CALCULATION OF TOTAL MIN. R VALUE FOR BATT INSULATION.
4 .CI = CONTINUOUS INSULATION
5. UNDERSLAB INSULATION BASED ON 24" LENGTH FROM PERIMETER.

0 1' 5' 10' 15'

1/4" = 1'-0" GRAPHIC SCALE

NOTE:
IF THIS DRAWING IS LESS THAN 34" X 22"
IT IS A REDUCED SIZE DRAWING

APPR	DATE	DESCRIPTION	MARK
	05/2023	MOD P00005	1
	10/2025	MOD P00006 AND P00007	2

NAVFAC

STATE OF FLORIDA
BILLY KEITH HOLLOWAY
AR93022
REGISTERED ARCHITECT
SEAL

BAMFORTH
ENGINEERS + SURVEYORS
AE INFO

APPROVED
FOR COMMANDER NAVFAC 11/6/2025
ACTIVITY Approved by J. Scott Roberts, Asset Management Branch Head & Supervisory Facility Planner, PWD Beaufort, SC via email.
SATISFACTORY TO DATE 12/15/2022

DES	EAD	DRW	JAF	CHK	BKH
PM/DM					KTB / RLH
BRANCH MANAGER					CGM
CHIEF ENG/ARCH					EJA
FP ENGINEER					DSN

DEPARTMENT OF THE NAVY
NAVAL FACILITIES ENGINEERING SYSTEMS COMMAND
DC CORE
NAVAL FACILITIES ENGINEERING SYSTEMS COMMAND ~ MID-ATLANTIC
NORFOLK, VA
MCAS BEAUFORT
BEAUFORT, SC
P-475 AIRCRAFT MAINTENANCE HANGAR -
VOLUME 4 (PARKING GARAGE OPTION)
PARKING GARAGE - WALL SECTIONS

SCALE: As indicated
EPROJECT NO.: 1363603
CONSTR. CONTR. NO.
NAVFAC DRAWING NO. 12860330
SHEET 1109 OF 1412

PAE311

DRAWFORM REVISION: 25 AUGUST 2020

Autodesk Docs://2042 \ MAFAT 502 735 Maintenance Hangar-2004Z 735 Main Hangar_Parking Facility.rvt
11/4/2025 8:34:21 PM

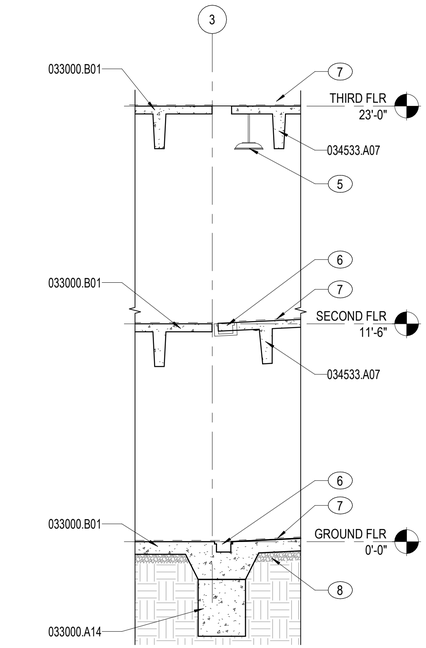

C2 WALL SECTION
1/4" = 1'-0"
PAE301

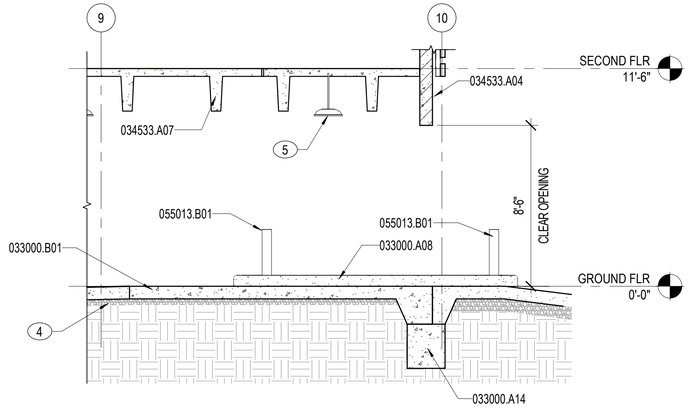

C3 WALL SECTION AT ENTRY
1/4" = 1'-0"
PAE401

NOTES:

SHEET NOTES:

A REFER TO SHEET PAE001 FOR ARCHITECTURAL ABBREVIATIONS AND SYMBOLS.

B ARCHITECTURAL ELEVATION FOR GROUND FLOOR TOP OF SLAB IS DEFINED AS 0'-0". REFER TO VOLUME 1, SHEETS CG101-CG102 FOR SLAB ELEVATIONS RELATIVE TO NORTH AMERICAN VERTICAL DATUM (NAVD) SYSTEM.

C FOR ALL ROOF INSULATION, PROVIDE AN R-VALUE EQUAL TO R-25 MINIMUM CONTINUOUS INSULATION. INSULATION FOR DESIGN PURPOSES IS BASED ON 1" POLYISOCYANURATE INSULATION = R-6.

D SLOPED ROOF COMPOSITION IS AN ALUMINUM STANDING SEAM METAL ROOFING PANEL ON 5/8" GLASS MAT COVER BOARD OVER AND BELOW THE 4" POLYISOCYANURATE RIGID BOARD INSULATION ON METAL DECK. REFER TO SPECIFICATION SECTION 07 61 15. REFER TO STRUCTURAL DRAWINGS FOR DECK INFORMATION.

E REFER TO SHEET PAE581 FOR STANDING SEAM METAL ROOFING DETAILS.

F REFER TO VOLUME 1, SHEETS CS101-CS102, CG101-CG102, AND CG105-CG106 FOR CIVIL SITE INFORMATION.

G REFER TO VOLUME 1, SHEET AS100 FOR OVERALL ARCHITECTURAL SITE PLAN INFORMATION.

H REFER TO SHEET PAE104Z FOR PLAN WITHOUT THE PHOTOVOLTAIC (PV) OPTION.

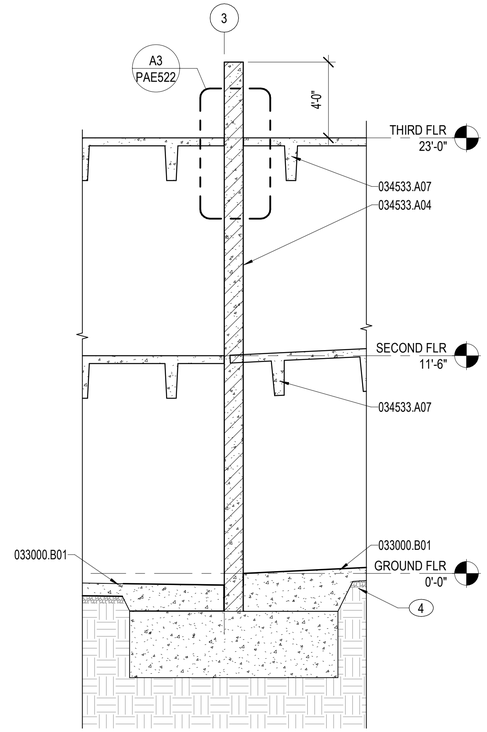

A2 WALL SECTION
1/4" = 1'-0"
PAE101, PAE102, PAE103

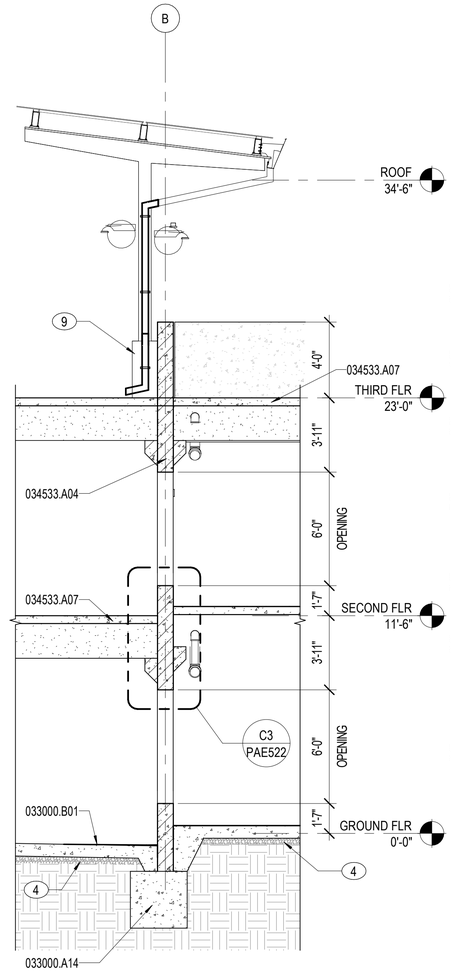

A3 WALL SECTION
1/4" = 1'-0"
PAE301

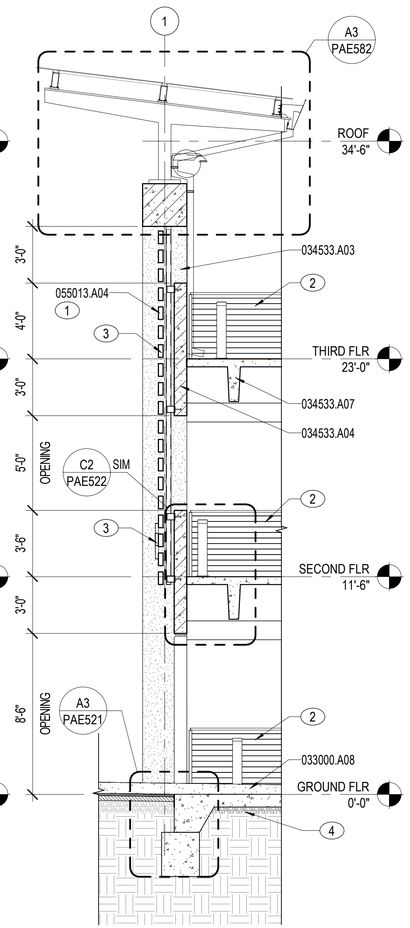

A4 WALL SECTION
1/4" = 1'-0"
PAE301

KEY NOTES (00)

1 SCREEN / VISION BARRIER WITH SIGNAGE LETTERS. REFER TO SHEET PAE551 FOR ADDITIONAL INFORMATION.

2 GUARDRAIL. REFER TO DETAIL D2/PAE421.

3 GARAGE AND ENTRY/EXIT SIGNAGE LETTERS. REFER TO SHEET PAE551.

4 4" POROUS FILL.

5 LIGHT FIXTURE. REFER TO SHEETS PEL101, PEL102, AND PEL103 FOR ADDITIONAL INFORMATION.

6 FLOOR TRENCH DRAIN, REFER TO PLUMBING DRAWINGS

7 CONCRETE SEALER.

8 4" POROUS FILL.

9 CONCRETE BASE 16"x24"x36" AT EVERY PV STRUCTURE BASE CENTER BAYS ONLY. REFER TO STRUCTURAL DRAWINGS FOR FURTHER INFORMATION.

MATERIAL NOTES

033000.A08	CONCRETE CURB
033000.A14	GRADE BEAM
033000.B01	CONCRETE SLAB
034533.A03	PRECAST/PRESTRESSED CONCRETE COLUMN
034533.A04	PRECAST/PRESTRESSED CONCRETE WALL PANEL
034533.A07	PRECAST/PRESTRESSED CONCRETE FLOOR DOUBLE TEE
055013.A04	EXTRUDED ALUMINUM TUBE
055013.B01	STEEL BOLLARD

INSULATION SCHEDULE

LOCATION	MATERIAL	TYPE	THICKNESS	MIN. R-VALUE
ROOF	072113.R10	RIGID	4"	R-24
WALL	PRECAST MFR.	RIGID	4"	R-24
WALL	072116.R10	BATT	0' - 3 5/8"	R-13.8
UNDERSLAB	072112.R02	RIGID	0' - 3 5/8"	R-18

NOTES:
1. THICKNESS VARIES WITH INSULATION TYPE
2. VALUE OF R-6 PER INCH USED FOR CALCULATION OF TOTAL MIN. R VALUE FOR RIGID INSULATION
3. VALUE OF R-3.8 PER INCH USED FOR CALCULATION OF TOTAL MIN. R VALUE FOR BATT INSULATION.
4 .CI = CONTINUOUS INSULATION
5. UNDERSLAB INSULATION BASED ON 24" LENGTH FROM PERIMETER.

0 1' 5' 10' 15'
1/4" = 1'-0" GRAPHIC SCALE

NOTE:
IF THIS DRAWING IS LESS THAN 34" X 22"
IT IS A REDUCED SIZE DRAWING

NO.	DESCRIPTION	DATE	APPR
1	MOD P00005	05/2023	
2	MOD P00006 AND P00007	10/2025	

NAVFAC

STATE OF FLORIDA
BILLY KEITH HOLLOWAY
AR93022
REGISTERED ARCHITECT
SEAL

BAMFORTH
ENGINEERS ARCHITECTS
AE INFO

APPROVED
FOR COMMANDER NAVFAC 11/6/2025
ACTIVITY
Approved by J. Scott Roberts,
Asset Management Branch Head &
Supervisory Facility Planner, PWD
Beaufort, SC via email.

SATISFACTORY TO DATE	12/15/2022
DES EAD DRW MCL CHK	BKH
PM/DM	KTB / RLH
BRANCH MANAGER	CGM
CHIEF ENG/ARCH	EJA
FP ENGINEER	DSN

DEPARTMENT OF THE NAVY
NAVAL FACILITIES ENGINEERING SYSTEMS COMMAND ~ MID-ATLANTIC
NORFOLK, VA
DC CODE:
MCAS BEAUFORT
BEAUFORT, SC
P-475 AIRCRAFT MAINTENANCE HANGAR -
VOLUME 4 (PARKING GARAGE OPTION)
PARKING GARAGE - WALL SECTIONS

SCALE:	As indicated
EPROJECT NO.:	1363603
CONSTR. CONTR. NO.	
NAVFAC DRAWING NO.	12860331
SHEET	1110 OF 1412

PAE312

DRAWFORM REVISION: 25 AUGUST 2020

Autodesk Docs://2024 1 MAFAT 102 F35 Maintenance Hangar/2024 2 F35 Maint Hangar_Parking Facility.rvt
11/4/2025 8:34:30 PM

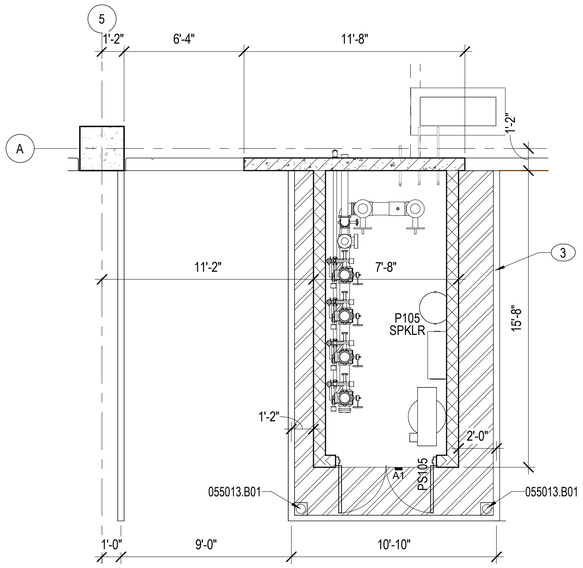

B1 SPRINKLER RM PLAN

1/4" = 1'-0"

PAE101

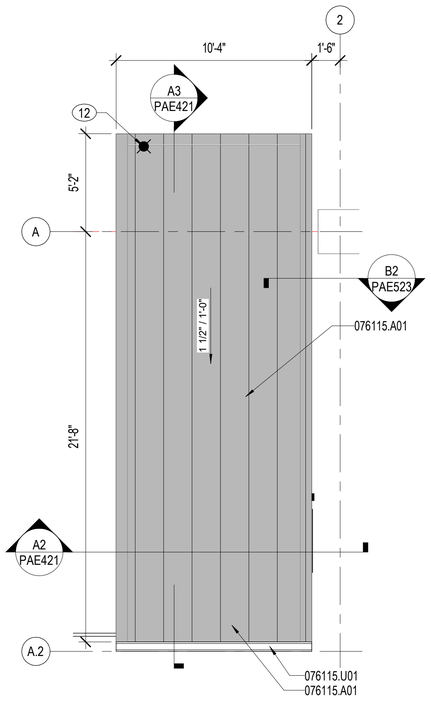

B2 TYPICAL STAIR ROOF PLAN

1/4" = 1'-0"

PAE104

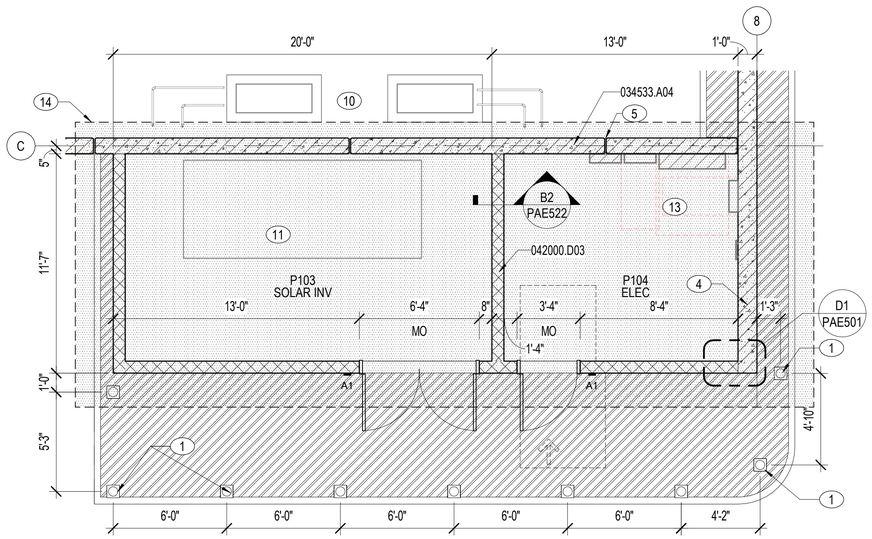

A1 ENLARGED PLAN

1/4" = 1'-0"

PAE101

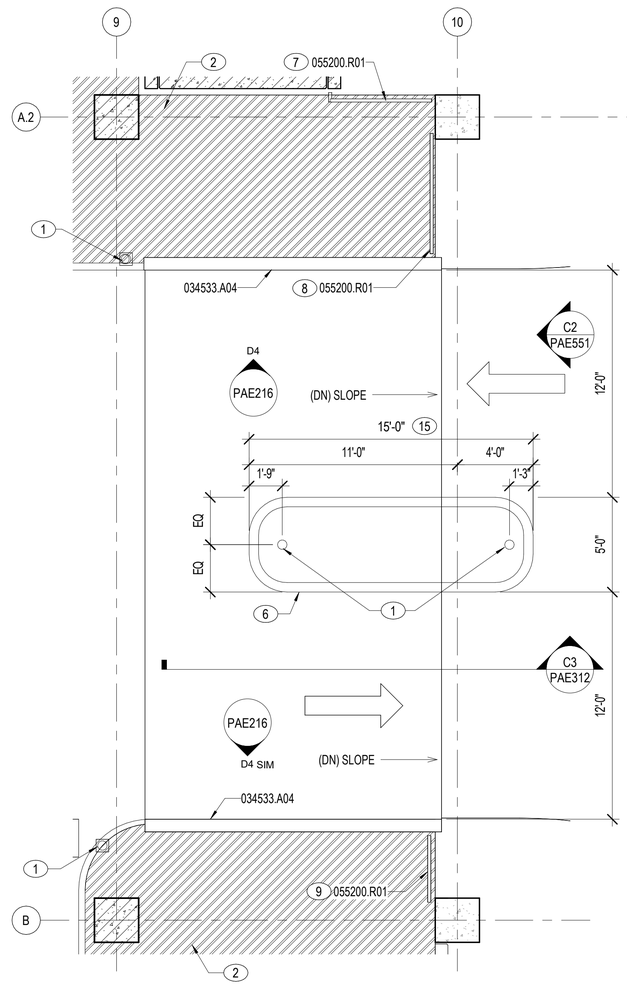

A3 EAST ENTRANCE

1/4" = 1'-0"

PAE101

NOTES:

SHEET NOTES:

A REFER TO SHEET PAE001 FOR ARCHITECTURAL ABBREVIATIONS AND SYMBOLS.

B DASHED LINES REPRESENT ITEMS ABOVE.

C DASHED LINES AND ARROWS AT DOORS INDICATE MINIMUM ADA CLEARANCES AND APPROACHES.

D PLUMBING FIXTURES SHOWN FOR REFERENCE ONLY. REFER TO PLUMBING SHEETS FOR MORE INFORMATION.

E REFER TO SHEET SERIES "PAG" FOR PARKING GARAGE SIGNAGE AND MISCELLANEOUS PARKING ACCESSORY INFORMATION.

F REFER TO VOLUME 2A FOR SIGNAGE ELEVATIONS. REFER TO SHEET PAE601 FOR SIGNAGE SCHEDULE.

KEY NOTES (00)

1 SURFACE MOUNTED, REMOVABLE, PEDESTAL BOLLARD, TYP. REFER TO DETAIL A2/PAE553.

2 PAINTED STRIPING. REFER TO SHEET PAG101 FOR ADDITIONAL INFORMATION.

3 4" WIDE PAINTED STRIPING. REFER TO SHEET PAG101 FOR ADDITIONAL INFORMATION.

4 SHEAR WALL.

5 PRECAST JOINT.

6 CONCRETE ISLAND. REFER TO VOLUME 1, SHEETS CS101-CS101 AND DETAIL A4/CS504 FOR ADDITIONAL INFORMATION.

7 GUARDRAIL. REFER TO DETAIL D2/PAE421.

8 GUARDRAIL. REFER TO DETAIL D3/PAE421.

9 GUARDRAIL. REFER TO DETAIL D4/PAE421.

10 MECHANICAL EQUIPMENT. REFER TO PMH101B FOR ADDITIONAL INFORMATION.

11 PV INVERTER AND CONCRETE PAD. PROVIDE IF PARKING GARAGE PV PANEL OPTION IS AWARDED. REFER TO SHEET PEP101 FOR ADDITIONAL INFORMATION.

12 LIGHT FIXTURE. REFER TO SHEETS PEL101, PEL102, AND PEL103 FOR ADDITIONAL INFORMATION.

13 ELECTRICAL EQUIPMENT. REFER TO SHEET PEP101 FOR ADDITIONAL INFORMATION.

14 HATCHED AREA DEPICTS EXTENTS OF BELOW SLAB VAPOR BARRIER (033000.V01) FOR ROOM P103 AND P104. EXTEND BARRIER A MINIMUM OF 3 FEET BEYOND THE EXTERIOR WALL PERIMETER BOUNDARY OF CONDITIONED ROOMS.

15 SECONDARY GROUND FLOOR VEHICLE ENTRY/EXIT.

MATERIAL NOTES

034533.A04	PRECAST/PRESTRESSED CONCRETE WALL PANEL
042000.D03	CMU 8"
055013.B01	STEEL BOLLARD
055200.R01	STEEL GUARDRAIL
076115.A01	STANDING-SEAM METAL ROOF PANEL
076115.U01	GUTTER

INTERIOR SIGN TYPES

A1	ROOM IDENTIFICATION WITH PAPER INSERT
A6	STAIR IDENTIFICATION
B2	EXIT SIGN

*REFER TO VOLUME 2A HANGAR FOR ABA INTERIOR ROOM SIGN TYPES.

PLAN NORTH

0 1' 5' 10' 15'

1/4" = 1'-0" GRAPHIC SCALE

NOTE:
IF THIS DRAWING IS LESS THAN 34" X 22"
IT IS A REDUCED SIZE DRAWING

NO	DESCRIPTION	DATE	APPR
1	MOD P00005	05/2023	
2	MOD P00006 AND P00007	10/2025	

NAVFAC

STATE OF FLORIDA
BILLY KEITH HOLLOWAY
AR93022
REGISTERED ARCHITECT
SEAL

BAMFORTH ENGINEERING ARCHITECTURE

AE INFO

APPROVED
FOR COMMANDER NAVFAC 11/21/2025

ACTIVITY
Approved by J. Scott Roberts, Asset Management Branch Head & Supervisory Facility Planner, PWD Beaufort, SC via email.

SATISFACTORY TO DATE	12/15/2022
DES EAD / DRW JAF / CHK BKH	
PMDM	KTB / RLH
BRANCH MANAGER	CGM
CHIEF ENGARCH	EJA
FP ENGINEER	DSN

NAVAL FACILITIES ENGINEERING SYSTEMS COMMAND - MID-ATLANTIC
NORFOLK, VA

DEPARTMENT OF THE NAVY
NAVAL FACILITIES ENGINEERING SYSTEMS COMMAND
DC CODE:
MCAS BEAUFORT
BEAUFORT, SC

P-475 AIRCRAFT MAINTENANCE HANGAR - VOLUME 4 (PARKING GARAGE OPTION)

PARKING GARAGE - ENLARGED PLANS

SCALE:	1/4" = 1'-0"
EPROJECT NO.:	1363603
CONSTR. CONTR. NO.	
NAVFAC DRAWING NO.	12860332
SHEET	1111 OF 1412

PAE401

DRAWFORM REVISION 25 AUGUST 2020

Autodesk Docs://2004 MAFAT 100 F05 Maintenance Hangar-2004B F05 Maint Hangar_Parking Facility_rvt
11/5/2025 12:02 PM

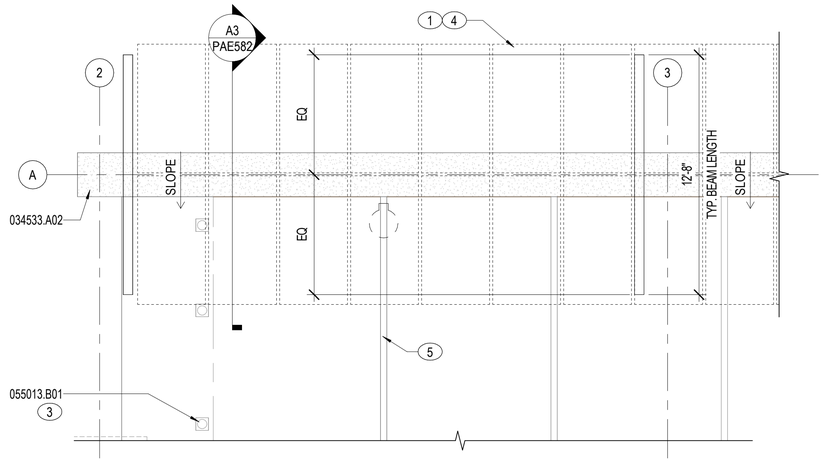

C3 PV SUPPORT STRUCTURE
1/4" = 1'-0"
PAE104

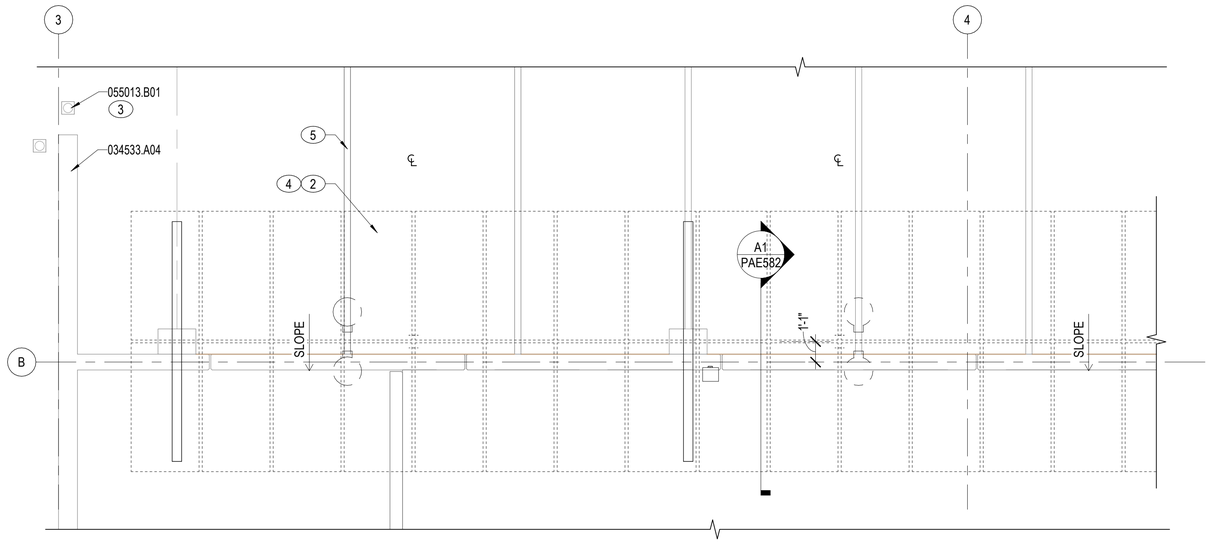

A2 PV SUPPORT STRUCTURE
1/4" = 1'-0"
PAE104

NOTES:

SHEET NOTES:

A REFER TO SHEET PAE001 FOR ARCHITECTURAL ABBREVIATIONS AND SYMBOLS.

B ARCHITECTURAL EXTERIOR DIMENSIONS ARE TO EXTERIOR FACE OF PRECAST PANEL OR CMU, UNO.

KEY NOTES (00)

1 ALUMINUM CANOPY SYSTEM WITH INTEGRAL DRAINAGE FOR PHOTOVOLTAIC PANEL. PROVIDE IF PARKING GARAGE PV PANEL OPTION IS AWARDED. REFER TO DETAIL A3/PAE582. REFER TO ELECTRICAL DRAWINGS PEP103A-PEP103B FOR PHOTOVOLTAIC PANEL SYSTEM INFORMATION.

2 ALUMINUM CANOPY SYSTEM WITH INTEGRAL DRAINAGE FOR PHOTOVOLTAIC PANEL. PROVIDE IF PARKING GARAGE PV PANEL OPTION IS AWARDED. REFER TO DETAIL A1/PAE582. REFER TO ELECTRICAL DRAWINGS PEP103A-PEP103B FOR PHOTOVOLTAIC PANEL SYSTEM INFORMATION.

3 SURFACE MOUNTED, REMOVABLE, PEDESTAL BOLLARD, TYP. REFER TO DETAIL A2/PAE553.

4 PHOTOVOLTAIC PANEL SYSTEM ABOVE. PROVIDE IF PARKING GARAGE PV PANEL OPTION IS AWARDED. REFER TO SHEET PEP103 FOR ADDITIONAL INFORMATION.

5 4" WIDE PAINTED PARKING STRIPING.

MATERIAL NOTES

034533.A02	PRECAST/PRESTRESSED CONCRETE BEAM
034533.A04	PRECAST/PRESTRESSED CONCRETE WALL PANEL
055013.B01	STEEL BOLLARD

NOTE:
PROVIDE **ONLY** IF PARKING GARAGE PV PANELS OPTION IS **ACCEPTED**.

***BASE BID / BID OPTION NOTE:**
IF REFERENCED OPTIONS ARE NOT SELECTED, REFER TO VOLUME 6 DRAWINGS FOR BASE BID ONLY INFORMATION.

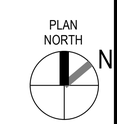

0 1' 5' 10' 15'
1/4" = 1'-0" GRAPHIC SCALE

NOTE:
IF THIS DRAWING IS LESS THAN 34" X 22"
IT IS A REDUCED SIZE DRAWING

SYM	DESCRIPTION	DATE	APPR
1	MOD P00005	05/2023	
2	MOD P00006 AND P00007	10/2025	

NAVFAC

STATE OF FLORIDA
BILLY KEITH HOLLOWAY
AR93022
REGISTERED ARCHITECT
11-13-23
SEAL

BAMFORTH
ENGINEERS + SURVEYORS

AE INFO

APPROVED
FOR COMMANDER NAVFAC 11/21/2025

ACTIVITY
Approved by J. Scott Roberts, Asset Management Branch Head & Supervisory Facility Planner, PWD Beaufort, SC via email.

SATISFACTORY TO DATE	12/15/2022
DES EAD	DRW JAF	CHK BKH
PM/DM	KTB / RLH
BRANCH MANAGER	CGM
CHIEF ENG/ARCH	EJA
FP ENGINEER	DSN

DEPARTMENT OF THE NAVY
NAVAL FACILITIES ENGINEERING SYSTEMS COMMAND ~ MID-ATLANTIC
NORFOLK, VA
DC CORE
MCAS BEAUFORT
BEAUFORT, SC
P-475 AIRCRAFT MAINTENANCE HANGAR - VOLUME 4 (PARKING GARAGE OPTION)
PARKING GARAGE - ENLARGED PLANS - ROOF PV SUPPORT STRUCTURE

SCALE:	As indicated
EPROJECT NO.:	1363603
CONSTR. CONTR. NO.	
NAVFAC DRAWING NO.	12860333
SHEET	1112 OF 1412

PAE402

DRAWFORM REVISION: 25 AUGUST 2020

Autodesk Docs://2024 NMFAT 502 F35 Maintenance Hangar/2024 F35 Maint Hangar_Parking Facility.rvt
11/4/2025 1:13:18 PM

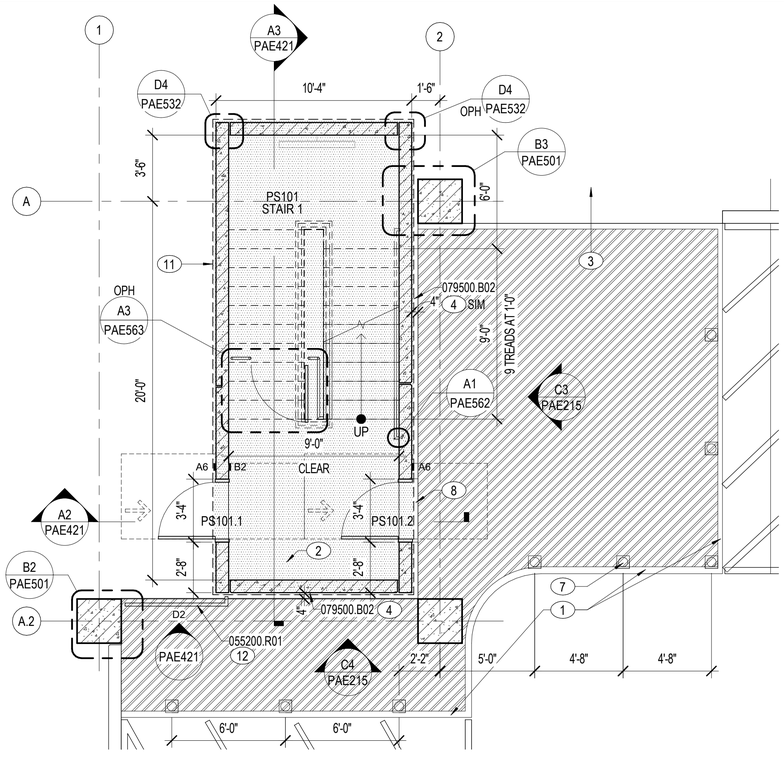

B1 STAIR 1 PLAN - GROUND FLOOR

1/4" = 1'-0" PAE101

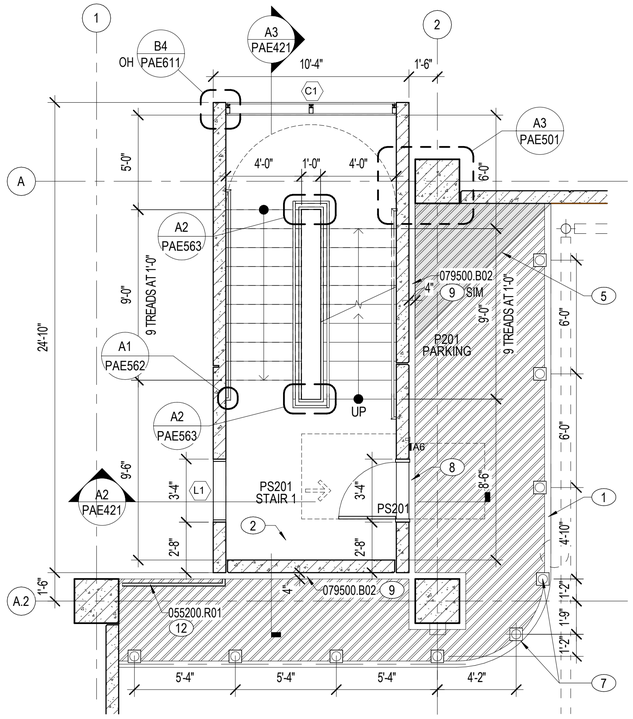

B3 STAIR 1 PLAN - SECOND FLOOR

1/4" = 1'-0" PAE102

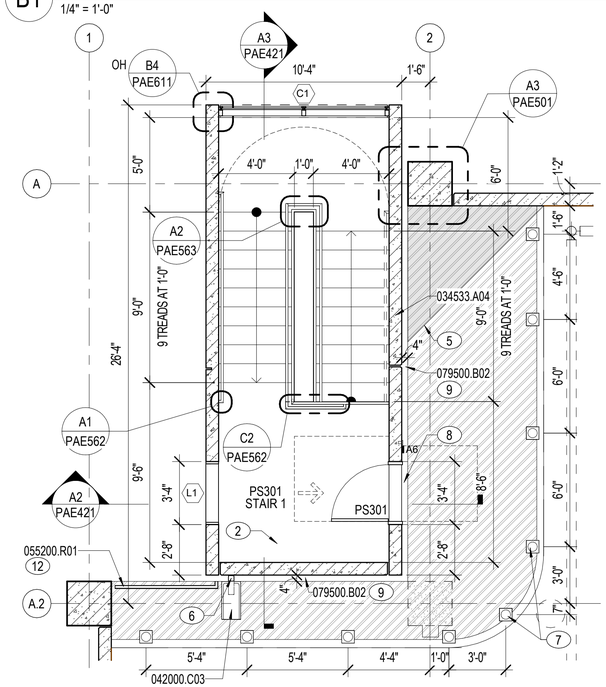

A1 STAIR 1 - THIRD FLOOR

1/4" = 1'-0" PA103

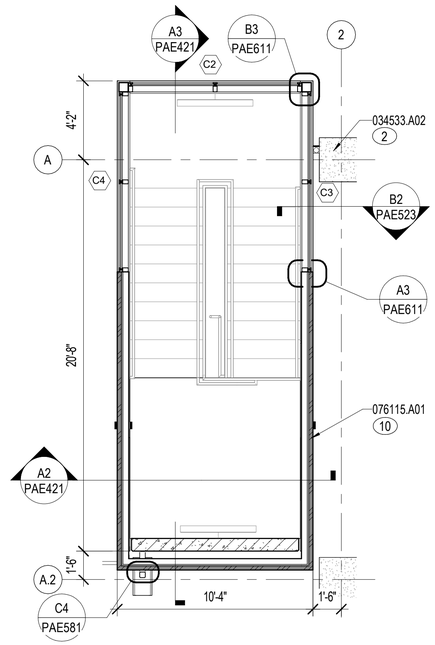

A3 STAIR 1 - CLERESTORY

1/4" = 1'-0" PAE104, PAE411

NOTES:

SHEET NOTES:

A REFER TO SHEET PAE001 FOR ARCHITECTURAL ABBREVIATIONS AND SYMBOLS.

B REFER TO SHEET PAE601 FOR DOOR SCHEDULE, DOOR AND FRAME TYPES, WINDOW AND LOUVER TYPES, DOOR DETAILS, AND SIGNAGE SCHEDULE.

C DESIGN OF THE STAIRS IS ASSIGNED TO A DELEGATED ENGINEER WHO IS RESPONSIBLE FOR SIZES AND THICKNESS OF STAIR COMPONENTS TO MEET THE SPECIFIED PERFORMANCE REQUIREMENTS. INFORMATION ON THIS SHEET IS PROVIDED FOR THE OVERALL DESIGN CONCEPT AND TO SHOW CERTAIN CODE REQUIRED DIMENSIONS.

KEY NOTES (00)

1 4" WIDE PAINTED STRIPING. REFER TO SHEETS PAG111-PAG121 FOR ADDITIONAL INFORMATION.
2 FIRE RISER. REFER TO SHEETS PFX101, PFX111, AND PFX121 FOR ADDITIONAL INFORMATION.
3 WALKWAY TO HANGAR.
4 4" BUILDING EXPANSION JOINT AROUND STAIRWELL GROUND LEVEL , TYP. REFER TO DETAIL A4/PAE524.
5 CRICKET IN CONCRETE SLAB TO MOVE WATER AROUND OBSTACLE TO FLOW TOWARDS DRAINS.
6 DOWNSPOUT.
7 SURFACE MOUNTED, REMOVABLE, PEDESTAL BOLLARD, TYP. REFER TO DETAIL A2/PAE553.
8 4" BUILDING EXPANSION JOINT AROUND STAIRWELL DOOR, TYP. REFER TO DETAIL B4/PAE524.
9 4" BUILDING EXPANSION JOINT AROUND STAIRWELL, TYP. REFER TO DETAIL C4/PAE524.
10 STANDING SEAM METAL ROOF PANEL IN VERTICAL APPLICATION.
11 HATCHED AREA DEPICTS EXTENTS OF BELOW SLAB VAPOR BARRIER (033000.V01) FOR STAIR WELL ONLY.
12 GUARDRAIL. REFER TO DETAIL D2/PAE421.

MATERIAL NOTES

034533.A02	PRECAST/PRESTRESSED CONCRETE BEAM
034533.A04	PRECAST/PRESTRESSED CONCRETE WALL PANEL
042000.C03	PRECAST CONCRETE SPLASH BLOCK
055200.R01	STEEL GUARDRAIL
076115.A01	STANDING-SEAM METAL ROOF PANEL
079500.B02	SEISMIC JOINT SYSTEM, FLOOR

INTERIOR SIGN TYPES

A1 ROOM IDENTIFICATION WITH PAPER INSERT
A6 STAIR IDENTIFICATION
B2 EXIT SIGN

*REFER TO VOLUME 2A HANGAR FOR ABA INTERIOR ROOM SIGN TYPES.

PLAN NORTH

0 1' 5' 10' 15'

1/4" = 1'-0" GRAPHIC SCALE

NOTE:
IF THIS DRAWING IS LESS THAN 34" X 22"
IT IS A REDUCED SIZE DRAWING

NUM	DESCRIPTION	DATE	APPR
1	MOD P00005	05/2023	
2	MOD P00006 AND P00007	10/2025	

NAVFAC

STATE OF FLORIDA BILLY KEITH HOLLOWAY AR93022 REGISTERED ARCHITECT SEAL

BAMFORTH

AE INFO

APPROVED

FOR COMMANDER NAVFAC

ACTIVITY
Approved by J. Scott Roberts, Asset Management Branch Head & Supervisory Facility Planner, PWD Beaufort, SC via email.

SATISFACTORY TO DATE 12/15/2022

DES	EAD	DRW	RWR	CHK	BKH
PMDM					KTB / RLH
BRANCH MANAGER					CGM
CHIEF ENG/ARCH					EJA
FP ENGINEER					DSN

DEPARTMENT OF THE NAVY
NAVAL FACILITIES ENGINEERING SYSTEMS COMMAND
DC CORE

NAVAL FACILITIES ENGINEERING SYSTEMS COMMAND ~ MID-ATLANTIC
NORFOLK, VA

MCAS BEAUFORT
BEAUFORT, SC

P-475 AIRCRAFT MAINTENANCE HANGAR -
VOLUME 4 (PARKING GARAGE OPTION)

PARKING GARAGE - ENLARGED PLANS - STAIR 1

SCALE: 1/4" = 1'-0"
EPROJECT NO.: 1363603
CONSTR. CONTR. NO.
NAVFAC DRAWING NO. 12860334
SHEET 1113 OF 1412

PAE411

DRAWFORM REVISION: 25 AUGUST 2020

Autodesk Docs://20042 MAFAT 502 735 Maintenance Hangar 20042 F35 Maint Hangar_Parking Facility.rvt
11/4/2025 11:22:2 PM

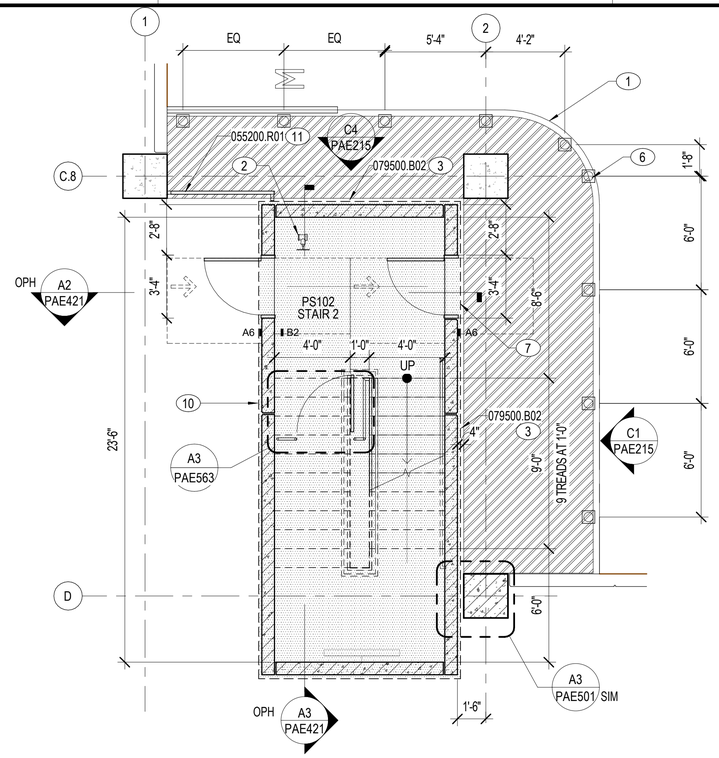

C1 STAIR 2 - GROUND FLOOR (STAIR 3 OPH)

1/4" = 1'-0" PAE101

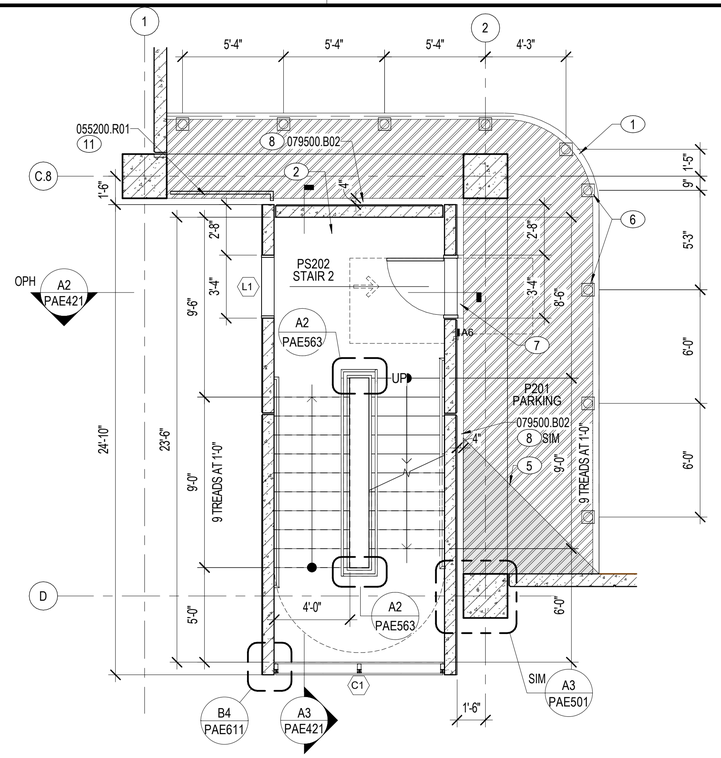

C3 STAIR 2 PLAN - SECOND FLOOR (STAIR 3 OPH)

1/4" = 1'-0" PAE102

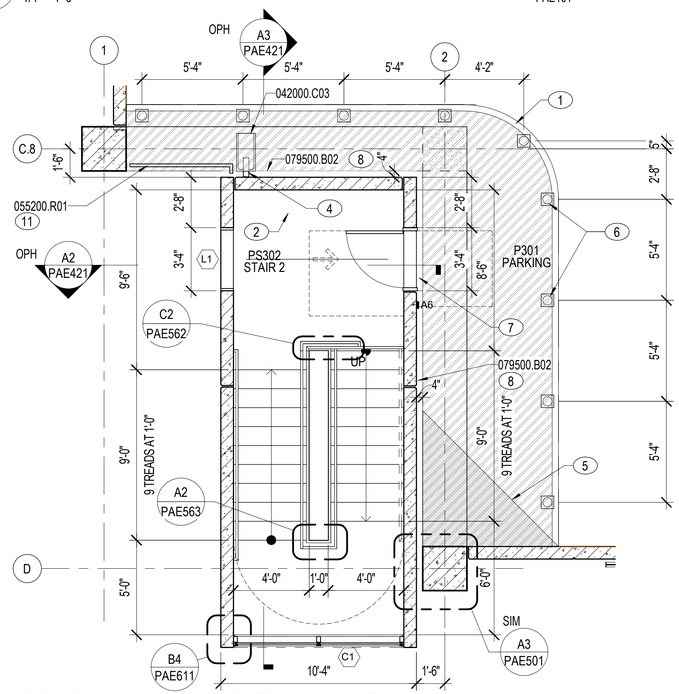

A1 STAIR 2 PLAN - THIRD FLOOR (STAIR 3 OPH)

1/4" = 1'-0" PAE103

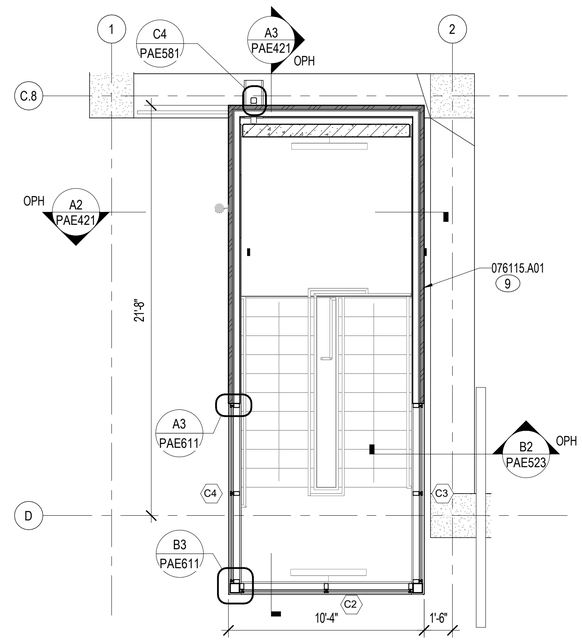

A3 STAIR 2 - CLERESTORY (STAIR 3 OPH)

1/4" = 1'-0" PAE104

NOTES:

SHEET NOTES:

A REFER TO SHEET PAE001 FOR ARCHITECTURAL ABBREVIATIONS AND SYMBOLS.

B REFER TO SHEET PAE601 FOR DOOR SCHEDULE, DOOR AND FRAME TYPES, WINDOW AND LOUVER TYPES, DOOR DETAILS, AND SIGNAGE SCHEDULE.

C DESIGN OF THE STAIRS IS ASSIGNED TO A DELEGATED ENGINEER WHO IS RESPONSIBLE FOR SIZES AND THICKNESS OF STAIR COMPONENTS TO MEET THE SPECIFIED PERFORMANCE REQUIREMENTS. INFORMATION ON THIS SHEET IS PROVIDED FOR THE OVERALL DESIGN CONCEPT AND TO SHOW CERTAIN CODE REQUIRED DIMENSIONS.

KEY NOTES (00)

1 4" WIDE PAINTED STRIPING. REFER TO SHEETS PAG111-PAG121 FOR ADDITIONAL INFORMATION.
2 FIRE RISER. REFER TO SHEETS PFX101, PFX111, AND PFX121 FOR ADDITIONAL INFORMATION.
3 4" BUILDING EXPANSION JOINT AROUND STAIRWELL ON GROUND LEVEL, TYP. REFER TO DETAIL A4/PAE524.
4 DOWNSPOUT.
5 CRICKET IN CONCRETE SLAB TO MOVE WATER AROUND OBSTACLE TO FLOW TOWARDS DRAINS.
6 SURFACE MOUNTED, REMOVABLE, PEDESTAL BOLLARD, TYP. REFER TO DETAIL A2/PAE553.
7 4" BUILDING EXPANSION JOINT AT STAIRWELL DOOR, TYP. REFER TO DETAIL B4/PAE524.
8 4" BUILDING EXPANSION JOINT AROUND STAIRWELL, TYP. REFER TO DETAIL C4/PAE524.
9 STANDING SEAM METAL ROOF PANEL IN VERTICAL APPLICATION.
10 HATCHED AREA DEPICTS EXTENTS OF BELOW SLAB VAPOR BARRIER (033000.V01) FOR STAIR WELL ONLY.
11 GUARDRAIL. REFER TO DETAIL D2/PAE421.

MATERIAL NOTES

042000.C03	PRECAST CONCRETE SPLASH BLOCK
055200.R01	STEEL GUARDRAIL
076115.A01	STANDING-SEAM METAL ROOF PANEL
079500.B02	SEISMIC JOINT SYSTEM, FLOOR

INTERIOR SIGN TYPES

A1	ROOM IDENTIFICATION WITH PAPER INSERT
A6	STAIR IDENTIFICATION
B2	EXIT SIGN

*REFER TO VOLUME 2A HANGAR FOR ABA INTERIOR ROOM SIGN TYPES.

PLAN NORTH

0 1' 5' 10' 15'

1/4" = 1'-0" GRAPHIC SCALE

NOTE:
IF THIS DRAWING IS LESS THAN 34" X 22"
IT IS A REDUCED SIZE DRAWING

NO	DESCRIPTION	DATE	APPR
1	MOD P00005	05/2023	
2	MOD P00006 AND P00007	10/2025	

NAVFAC

STATE OF FLORIDA
BILLY KEITH HOLLOWAY
AR93022
REGISTERED ARCHITECT
SEAL

BAMFORTH
ENGINEERING ARCHITECTURE
AE INFO

APPROVED
FOR COMMANDER NAVFAC 11/21/2025

ACTIVITY
Approved by J. Scott Roberts,
Asset Management Branch Head &
Supervisory Facility Planner, PWD
Beaufort, SC via email.

SATISFACTORY TO DATE 12/15/2022

DES	EAD	DRW	RWR	CHK	BKH
PM/IM					KTB / RLH
BRANCH MANAGER					CGM
CHIEF ENG/ARCH					EJA
FP ENGINEER					DSN

DEPARTMENT OF THE NAVY
NAVAL FACILITIES ENGINEERING SYSTEMS COMMAND
DC CODE
MCAS BEAUFORT

NAVAL FACILITIES ENGINEERING SYSTEMS COMMAND - MID-ATLANTIC
NORFOLK, VA

BEAUFORT, SC

P-475 AIRCRAFT MAINTENANCE HANGAR - VOLUME 4 (PARKING GARAGE OPTION)

PARKING GARAGE - ENLARGED PLANS - STAIR 2 AND STAIR 3

SCALE:	1/4" = 1'-0"
EPROJECT NO.:	1363603
CONSTR. CONTR. NO.	
NAVFAC DRAWING NO.	12860335
SHEET	1114 OF 1412

PAE412

DRAWFORM REVISION: 25 AUGUST 2020

Autodesk Docs://20043 MRAF 502 F35 Maintenance Hangar/20043 F35 Maint Hangar_Parking Facility.rvt
11/4/2025 1:13:27 PM

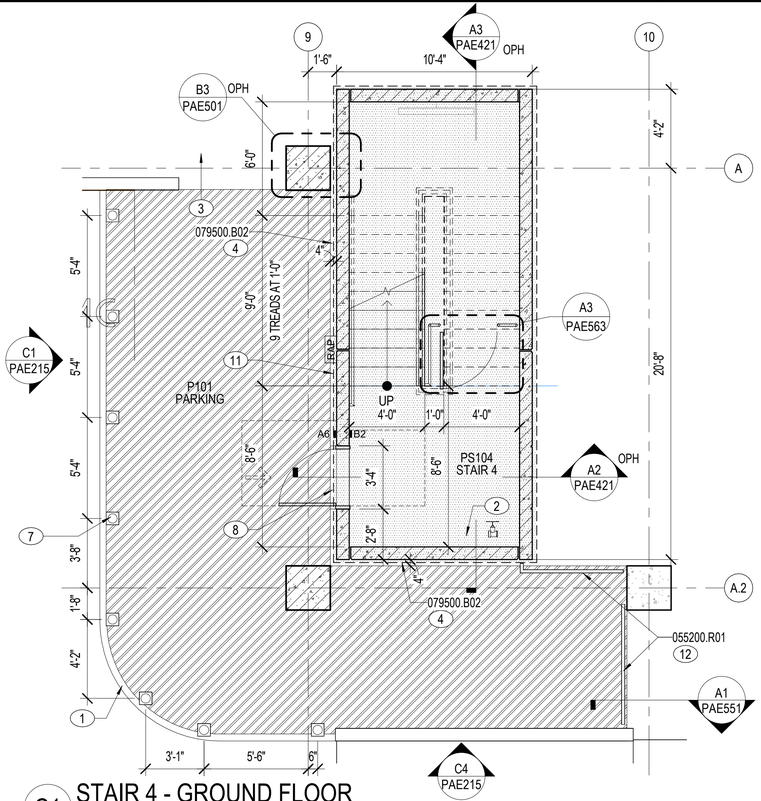

C1 STAIR 4 - GROUND FLOOR

1/4" = 1'-0"

PAE101

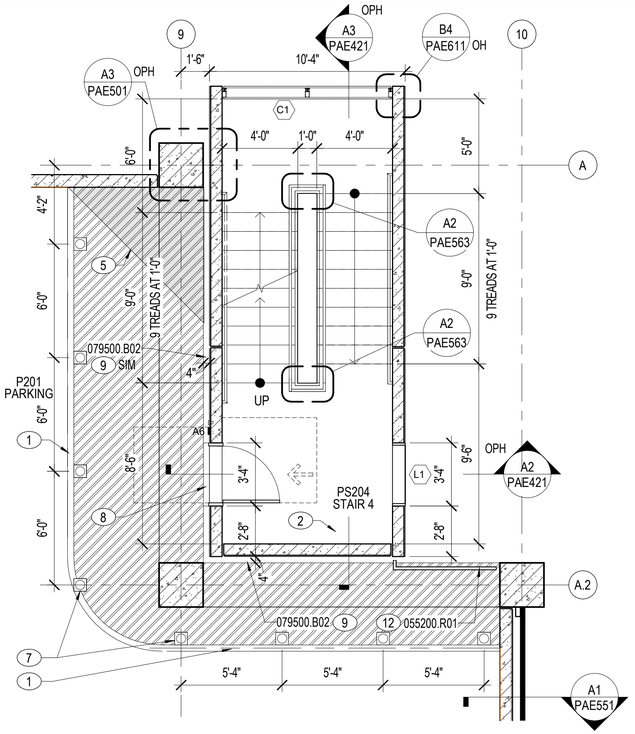

C3 STAIR 4 PLAN - SECOND FLOOR

1/4" = 1'-0"

PAE102

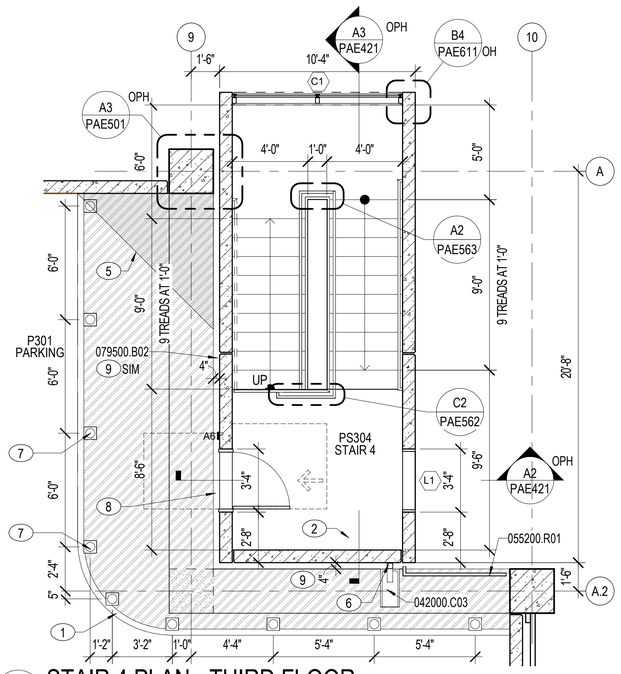

A1 STAIR 4 PLAN - THIRD FLOOR

1/4" = 1'-0"

PAE103

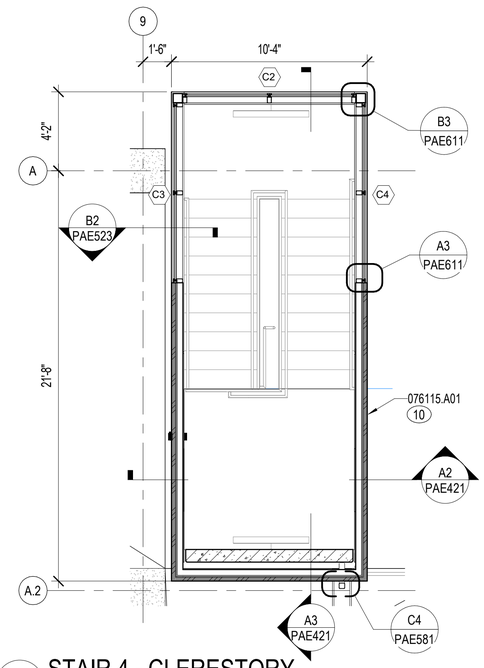

A3 STAIR 4 - CLERESTORY

1/4" = 1'-0"

PAE104

NOTES:

SHEET NOTES:

A REFER TO SHEET PAE001 FOR ARCHITECTURAL ABBREVIATIONS AND SYMBOLS.

B REFER TO SHEET PAE601 FOR DOOR SCHEDULE, DOOR AND FRAME TYPES, WINDOW AND LOUVER TYPES, DOOR DETAILS, AND SIGNAGE SCHEDULE.

C DESIGN OF THE STAIRS IS ASSIGNED TO A DELEGATED ENGINEER WHO IS RESPONSIBLE FOR SIZES AND THICKNESS OF STAIR COMPONENTS TO MEET THE SPECIFIED PERFORMANCE REQUIREMENTS. INFORMATION ON THIS SHEET IS PROVIDED FOR THE OVERALL DESIGN CONCEPT AND TO SHOW CERTAIN CODE REQUIRED DIMENSIONS.

KEY NOTES (00)

1 4" WIDE PAINTED STRIPING. REFER TO SHEETS PAG111-PAG121 FOR ADDITIONAL INFORMATION.

2 FIRE RISER. REFER TO SHEETS PFX101, PFX111, AND PFX121 FOR ADDITIONAL INFORMATION.

3 WALKWAY TO HANGAR.

4 4" BUILDING EXPANSION JOINT AROUND STAIRWELL, TYP. REFER TO DETAIL A4/PAE524.

5 CRICKET IN CONCRETE SLAB TO MOVE WATER AROUND OBSTACLE TO FLOW TOWARDS DRAINS.

6 DOWNSPOUT.

7 SURFACE MOUNTED, REMOVABLE, PEDESTAL BOLLARD, TYP. REFER TO DETAIL A2/PAE553.

8 4" BUILDING EXPANSION JOINT AROUND STAIRWELL, TYP. REFER TO DETAIL B4/PAE524.

9 4" BUILDING EXPANSION JOINT AROUND STAIRWELL, TYP. REFER TO DETAIL C4/PAE524.

10 STANDING SEAM METAL ROOF PANEL IN VERTICAL APPLICATION.

11 HATCHED AREA DEPICTS EXTENTS OF BELOW SLAB VAPOR BARRIER (033000.V01) FOR STAIR WELL ONLY.

12 GUARDRAIL. REFER TO DETAIL D2/PAE421.

MATERIAL NOTES

042000.C03	PRECAST CONCRETE SPLASH BLOCK
055200.R01	STEEL GUARDRAIL
076115.A01	STANDING-SEAM METAL ROOF PANEL
079500.B02	SEISMIC JOINT SYSTEM, FLOOR

INTERIOR SIGN TYPES

A1	ROOM IDENTIFICATION WITH PAPER INSERT
A6	STAIR IDENTIFICATION
B2	EXIT SIGN

*REFER TO VOLUME 2A HANGAR FOR ABA INTERIOR ROOM SIGN TYPES.

PLAN NORTH

0 1' 5' 10' 15'

1/4" = 1'-0" GRAPHIC SCALE

NOTE:
IF THIS DRAWING IS LESS THAN 34" X 22"
IT IS A REDUCED SIZE DRAWING

NUM	DESCRIPTION	DATE	APPR
1	MOD P00005	05/2023	
2	MOD P00006 AND P00007	10/2025	

NAVFAC

STATE OF FLORIDA
BILLY KEITH HOLLOWAY
AR93022
REGISTERED ARCHITECT
SEAL

BAMFORTH
ENGINEERING ARCHITECTURE

AE INFO

APPROVED
FOR COMMANDER NAVFAC 11/21/2025

ACTIVITY
Approved by J. Scott Roberts,
Asset Management Branch Head &
Supervisory Facility Planner, PWD
Beaufort, SC via email

SATISFACTORY TO DATE: 12/15/2022

DES	EAD	DRW RWR	CHK BKH
PM/CM			KTB / RLH
BRANCH MANAGER			CGM
CHIEF ENG/ARCH			EJA
FP ENGINEER			DSN

DEPARTMENT OF THE NAVY
NAVAL FACILITIES ENGINEERING SYSTEMS COMMAND
DC CODE:
NAVAL FACILITIES ENGINEERING SYSTEMS COMMAND – MID-ATLANTIC
NORFOLK, VA
MCAS BEAUFORT
BEAUFORT, SC
P-475 AIRCRAFT MAINTENANCE HANGAR -
VOLUME 4 (PARKING GARAGE OPTION)
PARKING GARAGE - ENLARGED PLANS - STAIR 4

SCALE:	1/4" = 1'-0"
EPROJECT NO.:	1363603
CONSTR. CONTR. NO.	
NAVFAC DRAWING NO.	12860336
SHEET	1115 OF 1412

PAE413

DRAWFORM REVISION: 25 AUGUST 2020

Autodesk Docs://20043 MAF 530 Maintenance Hangar/20043 F35 Maint Hangar_Parking Facility.rvt
11/4/2025 1:13:32 PM

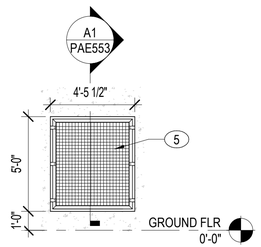

D1 ELEVATION
1/4" = 1'-0" PAE215

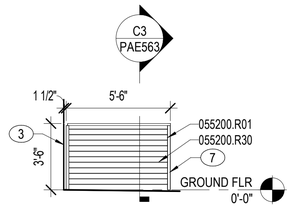

D2 TYP GUARDRAIL AT STAIRS
1/4" = 1'-0" PAE101, PAE102, PAE103, PAE215, PAE301 PAE401, PAE411

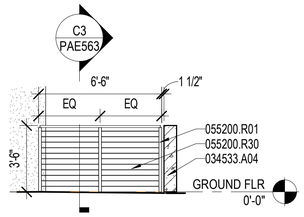

D3 GUARDRAIL AT ENTRY
1/4" = 1'-0" PAE401

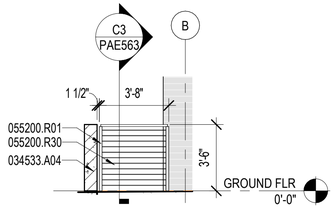

D4 GUARDRAIL AT ENTRY
1/4" = 1'-0" PAE401

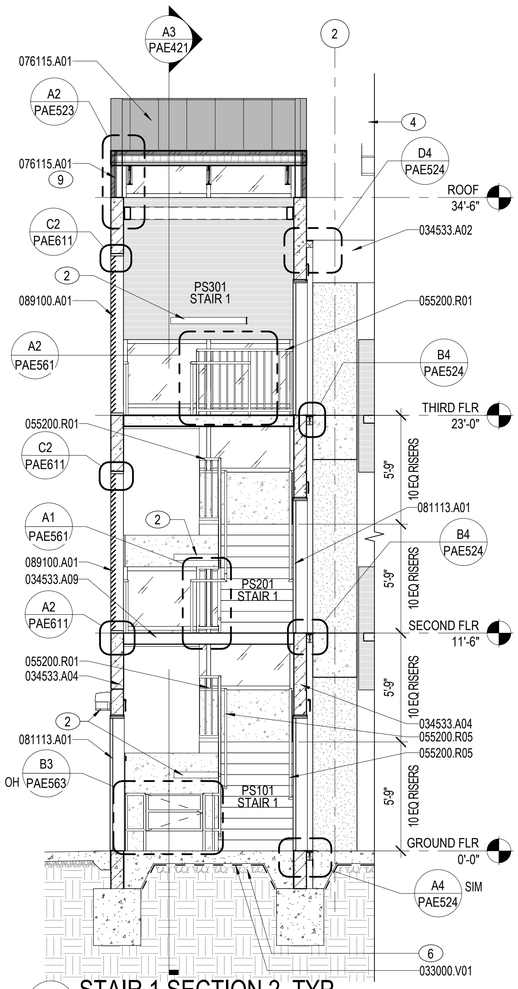

A2 STAIR 1 SECTION 2, TYP
1/4" = 1'-0" PAE401, PAE411, PAE412, PAE413, PAE421

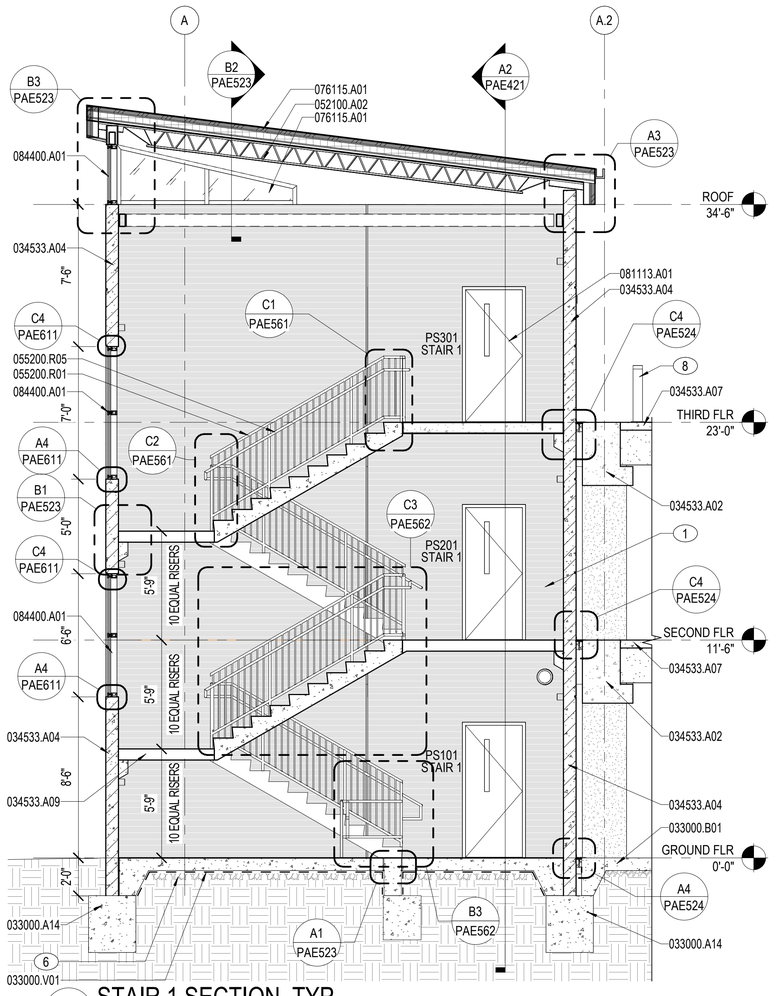

A3 STAIR 1 SECTION, TYP
1/4" = 1'-0" PAE401, PAE411, PAE412, PAE413, PAE421

NOTES:

SHEET NOTES:

A REFER TO SHEET PAE001 FOR ARCHITECTURAL ABBREVIATIONS AND SYMBOLS.

B REFER TO SHEET PAE601 FOR DOOR SCHEDULE, DOOR AND FRAME TYPES, WINDOW AND LOUVER TYPES, DOOR DETAILS, AND SIGNAGE SCHEDULE.

C DESIGN OF THE STAIRS IS ASSIGNED TO A DELEGATED ENGINEER WHO IS RESPONSIBLE FOR SIZES AND THICKNESS OF STAIR COMPONENTS TO MEET THE SPECIFIED PERFORMANCE REQUIREMENTS. INFORMATION ON THIS SHEET IS PROVIDED FOR THE OVERALL DESIGN CONCEPT AND TO SHOW CERTAIN CODE REQUIRED DIMENSIONS.

KEY NOTES (00)

1 FIRE RISER. REFER TO SHEETS PFX101, PFX111, AND PFX121 FOR ADDITIONAL INFORMATION.

2 SURFACE MOUNTED LIGHT FIXTURE. REFER TO SHEETS PEL101-PEL103 FOR ADDITIONAL INFORMATION.

3 COLUMN.

4 ALUMINUM CANOPY SYSTEM WITH INTEGRAL DRAINAGE FOR PHOTOVOLTAIC PANEL. PROVIDE IF PARKING GARAGE PV PANEL OPTION IS AWARDED. REFER TO DETAIL C3/PAE582. REFER TO STRUCTURAL DRAWINGS PSF411-PSF412 FOR ADDITIONAL INFORMATION. REFER TO ELECTRICAL DRAWINGS PEP103A-PEP103B FOR PHOTOVOLTAIC PANEL SYSTEM INFORMATION.

5 WIRE MESH 2" ON CENTER.

6 4" POROUS FILL.

7 RETURN HANDRAIL TO WALL AND MAINTAIN A GAP OF 3 1/2" MAX.

8 SURFACE MOUNTED, REMOVABLE, PEDESTAL BOLLARD, TYP. REFER TO DETAIL A2/PAE553.

9 STANDING SEAM METAL ROOF PANEL IN VERTICAL APPLICATION.

MATERIAL NOTES

033000.A14	GRADE BEAM
033000.B01	CONCRETE SLAB
033000.V01	VAPOR RETARDER
034533.A02	PRECAST/PRESTRESSED CONCRETE BEAM
034533.A04	PRECAST/PRESTRESSED CONCRETE WALL PANEL
034533.A07	PRECAST/PRESTRESSED CONCRETE FLOOR DOUBLE TEE
034533.A09	PRECAST/PRESTRESSED CONCRETE STAIR
052100.A02	OPEN WEB STEEL JOIST
055200.R01	STEEL GUARDRAIL
055200.R05	STEEL HANDRAIL
055200.R30	ROD 3/8" DIA
076115.A01	STANDING-SEAM METAL ROOF PANEL
081113.A01	STEEL DOOR
084400.A01	GLAZED ALUMINUM CURTAIN WALL ASSEMBLY
089100.A01	EXTRUDED ALUMINUM WALL LOUVER

INSULATION SCHEDULE

LOCATION	MATERIAL	TYPE	THICKNESS	MIN. R-VALUE
ROOF	072113.R01	RIGID	4 INCHES	R-24

NOTES:
1. THICKNESS VARIES WITH INSULATION TYPE.
2. VALUE OF R-6 PER INCH USED FOR CALCULATION OF TOTAL MIN. R-VALUE FOR RIGID INSULATION.
3. VALUE OF R-3.8 PER INCH USED FOR CALCULATION OF TOTAL MIN. R-VALUE FOR BATT INSULATION.
4. ci = CONTINUOUS INSULATION.

0 1' 5' 10' 15'
1/4" = 1'-0" GRAPHIC SCALE

NOTE:
IF THIS DRAWING IS LESS THAN 34" X 22"
IT IS A REDUCED SIZE DRAWING

NUM	DESCRIPTION	DATE	APPR
1	MOD P00005	05/2023	
2	MOD P00006 AND P00007	10/2025	

NAVFAC

STATE OF FLORIDA
BILLY KEITH HOLLOWAY
AR93022
REGISTERED ARCHITECT
SEAL

BAMFORTH
ENGINEERING ARCHITECTURE
AE INFO

APPROVED
FOR COMMANDER NAVFAC
ACTIVITY
Approved by J. Scott Roberts,
Asset Management Branch Head &
Supervisory Facility Planner, PWD
Beaufort, SC via email.
SATISFACTORY TO DATE 12/15/2022

DES	EAD	DRW RWR	CHK BKH
PM/DM			KTB / RLH
BRANCH MANAGER			CGM
CHIEF ENG/ARCH			EJA
FP ENGINEER			DSN

DEPARTMENT OF THE NAVY
NAVAL FACILITIES ENGINEERING SYSTEMS COMMAND
DC CODE
MCAS BEAUFORT
NAVAL FACILITIES ENGINEERING SYSTEMS COMMAND – MID-ATLANTIC
NORFOLK, VA
BEAUFORT, SC
P-475 AIRCRAFT MAINTENANCE HANGAR -
VOLUME 4 (PARKING GARAGE OPTION)
PARKING GARAGE - STAIR SECTIONS - STAIR 1

SCALE:	1/4" = 1'-0"
EPROJECT NO.:	1363603
CONSTR. CONTR. NO.	
NAVFAC DRAWING NO.	12860337
SHEET	1116 OF 1412

PAE421

DRAWFORM REVISION: 26 AUGUST 2020

Autodesk Docs://20043 MFAX 500 750 Maintenance Hangar/20042 F58 Maint Hangar_Parking Facility.rvt
11/5/2025 1:03:08 PM

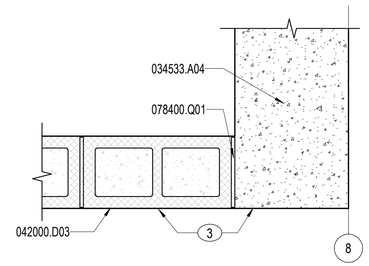

D1 PLAN DETAIL
1 1/2" = 1'-0"
PAE401

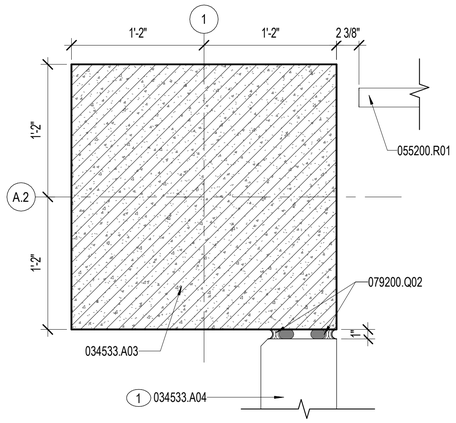

B2 EXTERIOR PLAN DETAIL
1 1/2" = 1'-0"
PAE411

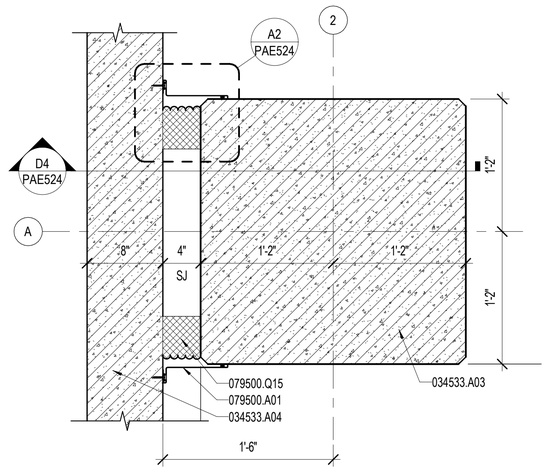

B3 EXTERIOR PLAN DETAIL
1 1/2" = 1'-0"
PAE411, PAE413

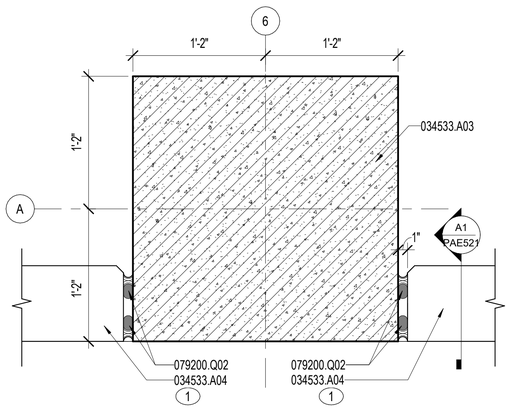

A2 EXTERIOR PLAN DETAIL
1 1/2" = 1'-0"
PAE101, PAE102, PAE103, PAE411

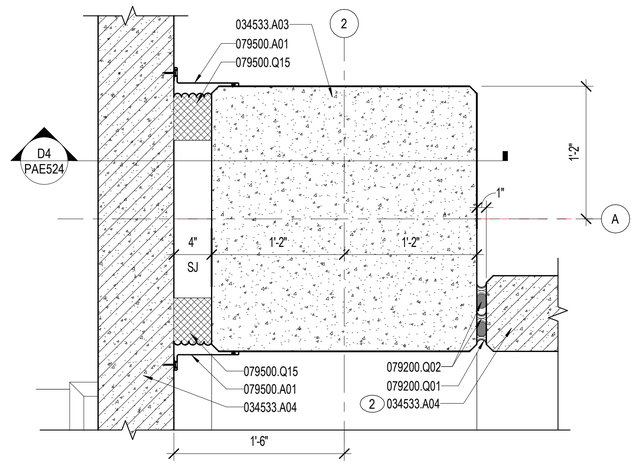

A3 EXTERIOR PLAN DETAIL
1 1/2" = 1'-0"
PAE411, PAE412, PAE413

NOTES:

SHEET NOTES:

A REFER TO SHEET PAE001 FOR ARCHITECTURAL ABBREVIATIONS AND SYMBOLS.
B REFER TO SHEETS PAE531-PAE532 FOR TYPICAL PRECAST JOINT SEALANT, REVEAL/JOINT TYPES AND DIMENSIONS, AND SEALANT WEEP DETAILS.
C REFER TO SHEET PAE601 FOR EXTERIOR DOOR DETAILS AND SHEET PAE611 FOR CURTAINWALL AND LOUVER DETAILS.
D ARCHITECTURAL EXTERIOR DIMENSIONS ARE TO EXTERIOR FACE OF PRECAST PANEL, FACE OF METAL STUD, AND FACE OF CMU, UNO.

KEY NOTES (00)

1 TOP OF PRECAST WALL 3'-6" FROM CONCRETE FLOOR.
2 TOP OF PRECAST WALL 3'-6" AFF AT SECOND FLR AND 4'-0" AT THIRD FLOOR.
3 ALIGN.

MATERIAL NOTES

034533.A03	PRECAST/PRESTRESSED CONCRETE COLUMN
034533.A04	PRECAST/PRESTRESSED CONCRETE WALL PANEL
042000.D03	CMU 8"
055200.R01	STEEL GUARDRAIL
078400.Q01	FIRESTOPPING SEALANT
079200.Q01	JOINT SEALANT
079200.Q02	BACKSTOP AND SEALANT
079500.A01	EXPANSION JOINT, EXTERIOR METAL FRAME AND COVER
079500.Q15	WEATHER-FACED PREFORMED FOAM EXPANSION JOINT

0 2" 10" 20" 30"
1½" = 1'-0" GRAPHIC SCALE

NOTE:
IF THIS DRAWING IS LESS THAN 34" X 22"
IT IS A REDUCED SIZE DRAWING

SYM	DESCRIPTION	DATE	APPR
1	MOD P00005	05/2023	
2	MOD P00006 AND P00007	10/2025	

NAVFAC

STATE OF FLORIDA
BILLY KEITH HOLLOWAY
AR93022
REGISTERED ARCHITECT
SEAL

BAMFORTH
ENGINEERS + SURVEYORS
A/E INFO

APPROVED
FOR COMMANDER NAVFAC 11/21/2025

ACTIVITY
Approved by J. Scott Roberts, Asset Management Branch Head & Supervisory Facility Planner, PWD Beaufort, SC via email.

SATISFACTORY TO DATE	12/15/2022
DES EAD	DRW JAF CHK BKH
PM/DM	KTB / RLH
BRANCH MANAGER	CGM
CHIEF ENG/ARCH	EJA
FP ENGINEER	DSN

DEPARTMENT OF THE NAVY
NAVAL FACILITIES ENGINEERING SYSTEMS COMMAND
DC CORE
NAVAL FACILITIES ENGINEERING SYSTEMS COMMAND ~ MID-ATLANTIC
NORFOLK, VA

MCAS BEAUFORT
BEAUFORT, SC
P-475 AIRCRAFT MAINTENANCE HANGAR - VOLUME 4 (PARKING GARAGE OPTION)
PARKING GARAGE - PLAN DETAILS

SCALE:	1 1/2" = 1'-0"
EPROJECT NO.:	1363603
CONSTR. CONTR. NO.	
NAVFAC DRAWING NO.	12860338
SHEET	1117 OF 1412

PAE501

DRAWFORM REVISION 26 AUGUST 2020

Autodesk Docs://20042 VMFAT 502 F35 Maintenance Hangar/20042 F35 Maint Hangar_Parking Facility.rvt
11/4/2025 1:13:42 PM

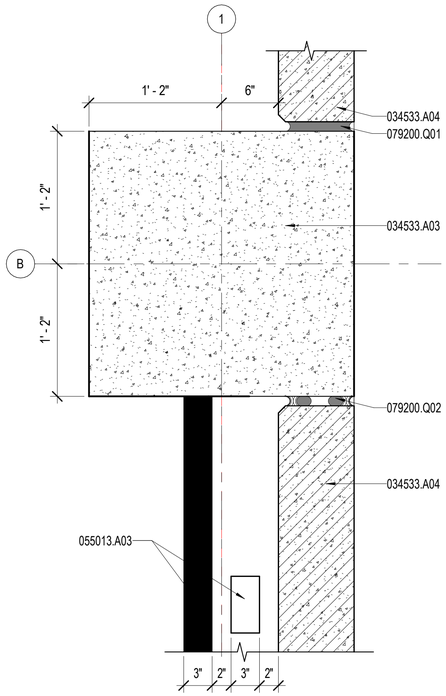

C3 PLAN DETAIL
1 1/2" = 1'-0" PAE102

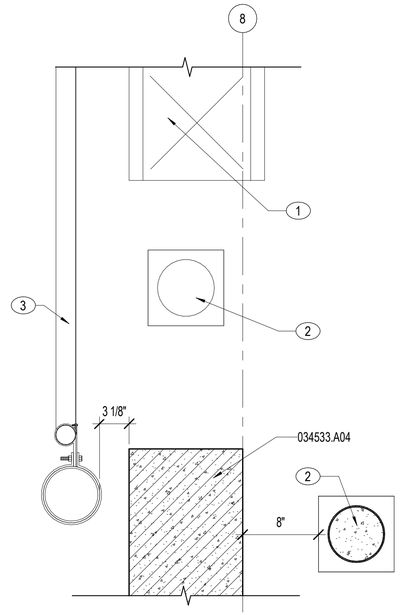

C4 PLAN DETAIL @ CHAIN-LINK FENCE
1 1/2" = 1'-0" PAE101

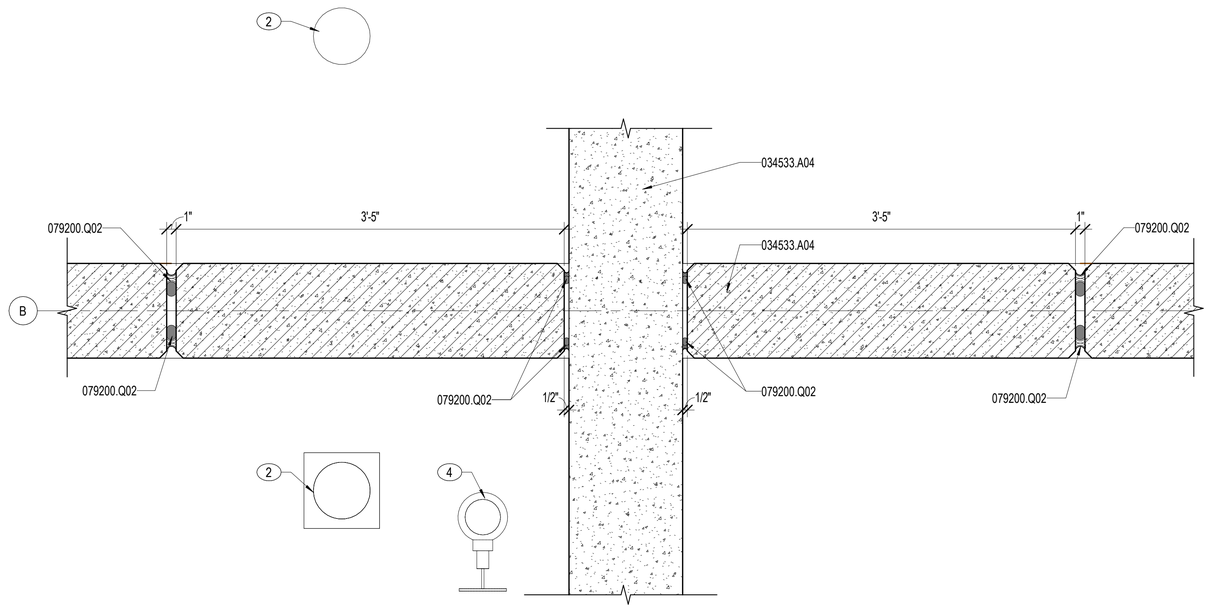

A2 EXTERIOR PLAN DETAIL - CONNECTION @ SHEAR CONC. WALL & LITE CONC. WALL
1 1/2" = 1'-0" PAE101, PAE102, PAE103, PAE412

NOTES:

SHEET NOTES:

A REFER TO SHEET PAE001 FOR ARCHITECTURAL ABBREVIATIONS AND SYMBOLS.
B REFER TO SHEETS PAE531-PAE532 FOR TYPICAL PRECAST JOINT SEALANT, REVEAL/JOINT TYPES AND DIMENSIONS, AND SEALANT WEEP DETAILS.
C REFER TO SHEET PAE601 FOR EXTERIOR DOOR DETAILS AND SHEET PAE611 FOR CURTAINWALL AND LOUVER DETAILS.
D ARCHITECTURAL EXTERIOR DIMENSIONS ARE TO EXTERIOR FACE OF PRECAST PANEL, FACE OF METAL STUD, AND FACE OF CMU, UNO.

KEY NOTES (00)

1 12" LINEAR DRAIN.
2 SURFACE MOUNTED, REMOVABLE, PEDESTAL BOLLARD, TYP. REFER TO DETAIL A2/PAE553.
3 CHAIN LINK FENCE WITH 6' DOUBLE GATE OPENING.
4 DRY STANDPIPE. REFER TO SHEET PFX101 FOR ADDITIONAL INFORMATION. PROVIDE PIPE GUARDS FOR PIPE PROTECTION PER DETAIL B2/PAE553.

MATERIAL NOTES

034533.A03	PRECAST/PRESTRESSED CONCRETE COLUMN
034533.A04	PRECAST/PRESTRESSED CONCRETE WALL PANEL
055013.A03	STEEL TUBE
079200.Q01	JOINT SEALANT
079200.Q02	BACKSTOP AND SEALANT

0 2" 10" 20" 30"
1½" = 1'-0" GRAPHIC SCALE

NOTE:
IF THIS DRAWING IS LESS THAN 34" X 22"
IT IS A REDUCED SIZE DRAWING

NUM	DESCRIPTION	DATE	APPR
1	MOD P00005	05/2023	
2	MOD P00006 AND P00007	10/2025	

NAVFAC

STATE OF FLORIDA
BILLY KEITH HOLLOWAY
AR93022
REGISTERED ARCHITECT
SEAL

BAMFORTH
ENGINEERING ARCHITECTURE
AE INFO

APPROVED
FOR COMMANDER NAVFAC 11/6/2025
ACTIVITY
Approved by J. Scott Roberts,
Asset Management Branch Head &
Supervisory Facility Planner, PWD
Beaufort, SC via email.

SATISFACTORY TO DATE	12/15/2022
DES EAD / DRW JAF / CHK BKH	
PM/DM	KTB / RLH
BRANCH MANAGER	CGM
CHIEF ENG/ARCH	EJA
FP ENGINEER	DSN

DEPARTMENT OF THE NAVY
NAVAL FACILITIES ENGINEERING SYSTEMS COMMAND
DC CO/RE
MCAS BEAUFORT

NAVAL FACILITIES ENGINEERING SYSTEMS COMMAND – MID-ATLANTIC
NORFOLK, VA

BEAUFORT, SC

P-475 AIRCRAFT MAINTENANCE HANGAR - VOLUME 4 (PARKING GARAGE OPTION)

PARKING GARAGE - PLAN DETAILS

SCALE:	1 1/2" = 1'-0"
EPROJECT NO.:	1363603
CONSTR. CONTR. NO.	
NAVFAC DRAWING NO.	12860339
SHEET	1118 OF 1412

PAE502

DRAWFORM REVISION: 25 AUGUST 2020

Autodesk Docs://20043 MWAT 502 F3S Maint Hangar_Parking Facility.rvt
11/4/2025 1:13:48 PM

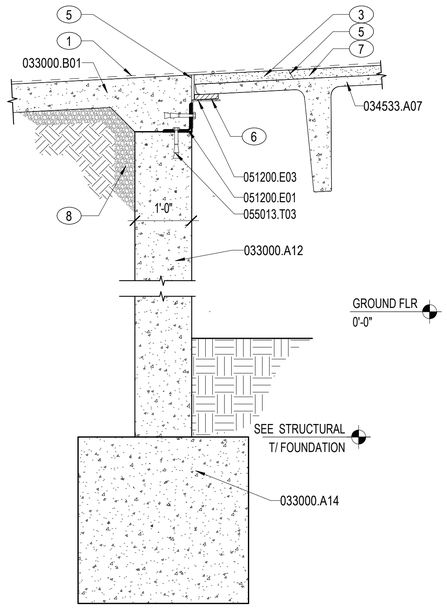

C2 RAMP SECTION

3/4" = 1'-0" PAE301

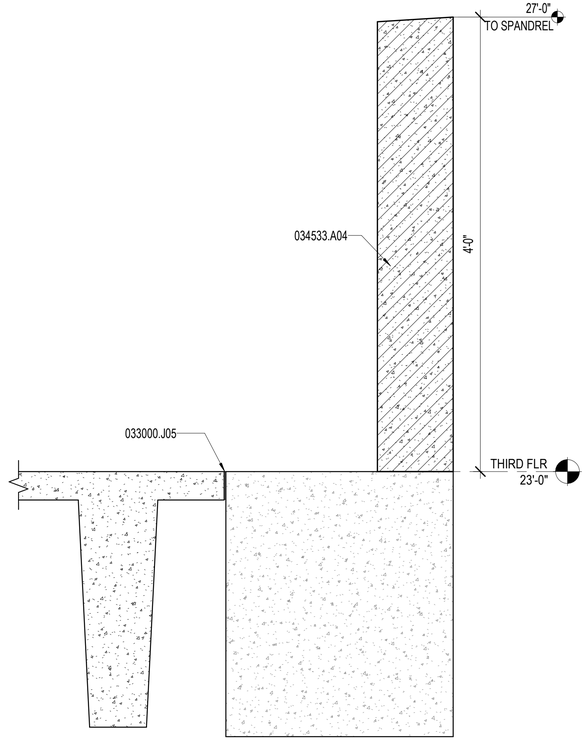

C3 SECTION DETAIL

1 1/2" = 1'-0" PAE104, PAE301

NOTES:

SHEET NOTES:

A REFER TO SHEET PAE001 FOR ARCHITECTURAL ABBREVIATIONS AND SYMBOLS.
B REFER TO VOLUME 1, SHEETS CS101-CS102 FOR CIVIL SITE INFORMATION.
C REFER TO SHEETS PAE531-PAE532 FOR TYPICAL PRECAST JOINT SEALANT, REVEAL/JOINT TYPES AND DIMENSIONS, AND SEALANT WEEP DETAILS.
D REFER TO SHEETS PAE581 FOR STANDING SEAM ROOFING DETAILS AND PAE582 FOR ROOF PV TRELLIS CANOPY SYSTEM ROOFING DETAILS.
E REFER TO SHEET PAE601 FOR EXTERIOR DOOR DETAILS AND SHEET PAE611 FOR CURTAINWALL AND LOUVER DETAILS.
F ARCHITECTURAL EXTERIOR DIMENSIONS ARE TO EXTERIOR FACE OF PRECAST PANEL, FACE OF METAL STUD, AND FACE OF CMU, UNO.

KEY NOTES (00)

1 CONCRETE SEALER.
2 MOUNTING CLIP, TYP.
3 CONCRETE POUR STRIP.
4 WELDED WIRE PANEL PLANT SUPPORT SYSTEM. REFER TO SHEET PAE552 FOR ADDITIONAL INFORMATION.
5 TOOLED JOINT WITH SEALANT.
6 NEOPRENE BEARING PAD EPOXY ADHERED TO BENT PLATE. REFER TO SHEET PSF501 FOR ADDITIONAL INFORMATION.
7 TOPPING SLAB. REFER TO STRUCTURAL DRAWINGS FOR ADDITIONAL INFORMATION.
8 4" POROUS FILL.
9 8" POROUS FILL.
10 1 1/2" (MIN.) BITUMINOUS CONCRETE SURFACE COURSE. REFER TO CIVIL DRAWINGS.
11 3" (MIN.) BITUMINOUS CONCRETE BASE COURSE. REFER TO CIVIL DRAWINGS.

MATERIAL NOTES

033000.A12	CONCRETE RETAINING WALL
033000.A14	GRADE BEAM
033000.B01	CONCRETE SLAB
033000.J05	PREFORMED JOINT FILLER
034533.A04	PRECAST/PRESTRESSED CONCRETE WALL PANEL
034533.A07	PRECAST/PRESTRESSED CONCRETE FLOOR DOUBLE TEE
051200.E01	STEEL ANGLE
051200.E03	STEEL PLATE, BENT
055013.T03	EXPANSION BOLT
055913.M13	EXTERIOR TRELLIS

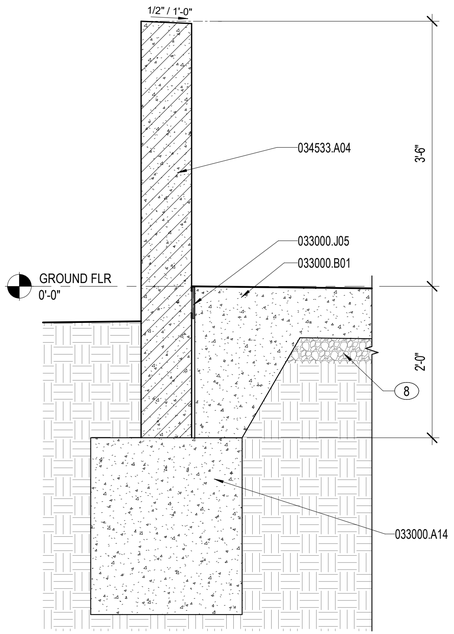

A1 SECTION DETAIL

1" = 1'-0" PAE311

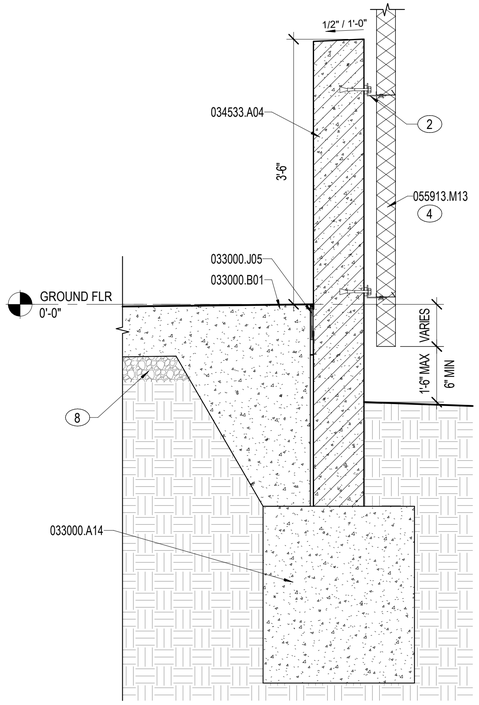

A2 SECTION DETAIL

1" = 1'-0" PAE211, PAE214, PAE311, PAE552

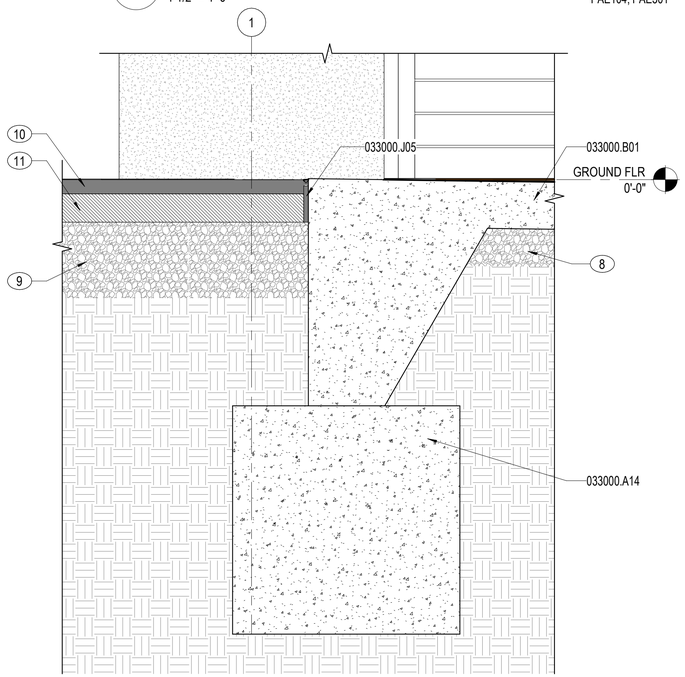

A3 SECTION DETAIL

1 1/2" = 1'-0" PAE312

0 4" 1' 2' 3' 4' 5'
3/4" = 1'-0" GRAPHIC SCALE

0 6" 1' 2' 3' 4'
1" = 1'-0" GRAPHIC SCALE

0 2" 10" 20" 30"
1½" = 1'-0" GRAPHIC SCALE

NOTE:
IF THIS DRAWING IS LESS THAN 34" X 22"
IT IS A REDUCED SIZE DRAWING

NUM	DESCRIPTION	DATE	APPR
1	MOD P00005	05/2023	
2	MOD P00006 AND P00007	10/2025	

NAVFAC

STATE OF FLORIDA
BILLY KEITH HOLLOWAY
AR93022
REGISTERED ARCHITECT
SEAL

BAMFORTH
ENGINEERING ARCHITECTURE
AE INFO

APPROVED
FOR COMMANDER NAVFAC
ACTIVITY
Approved by J. Scott Roberts,
Asset Management Branch Head &
Supervisory Facility Planner, PWD
Beaufort, SC via email.
SATISFACTORY TO DATE 12/15/2022

DES	EAD	DRW	MCL	CHK	BKH
PMDM					KTB / RLH
BRANCH MANAGER					CGM
CHIEF ENG/ARCH					EJA
FP ENGINEER					DSN

DEPARTMENT OF THE NAVY
NAVAL FACILITIES ENGINEERING SYSTEMS COMMAND
DC CORE
MCAS BEAUFORT
NAVAL FACILITIES ENGINEERING SYSTEMS COMMAND ~ MID-ATLANTIC
NORFOLK, VA
BEAUFORT, SC
P-475 AIRCRAFT MAINTENANCE HANGAR -
VOLUME 4 (PARKING GARAGE OPTION)
PARKING GARAGE - SECTION DETAILS

SCALE: As indicated
EPROJECT NO.: 1363603
CONSTR. CONTR. NO.
NAVFAC DRAWING NO. 12860340
SHEET 1119 OF 1412

PAE521

DRAWFORM REVISION: 25 AUGUST 2020

Autodesk Docs://20042 MAFA 502 735 Maintenance Hangar 20042 F35 Maint Hangar_Parking Facility.rvt
11/4/2025 11:15:01 PM

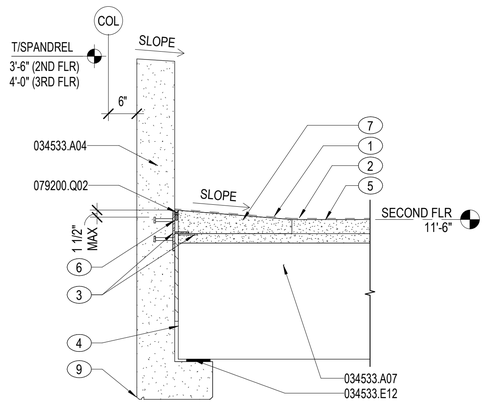

C1 DOUBLE TEE TO SPANDREL CONNECTION

3/4" = 1'-0" PAE311

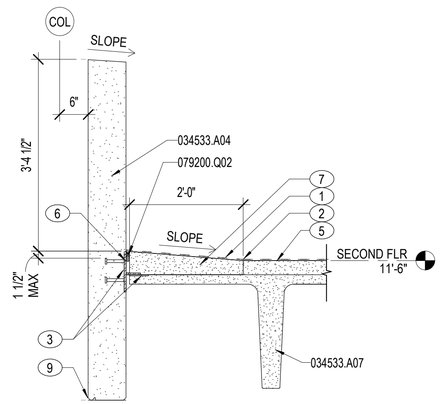

C2 CLOSURE SPANDREL CONNECTION

3/4" = 1'-0" PAE312

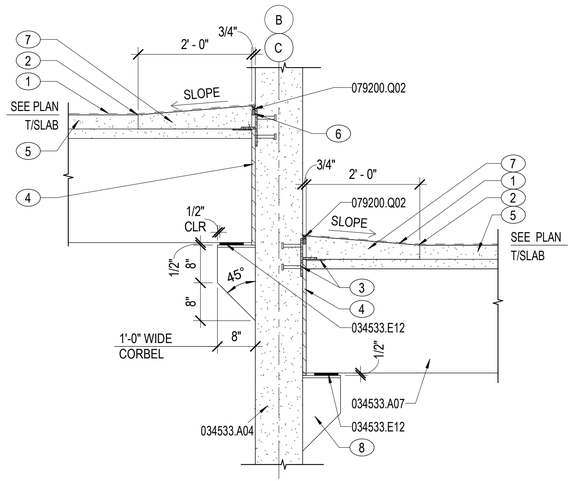

C3 DOUBLE TEE TO LITEWALL CONNECTION

3/4" = 1'-0" PAE312

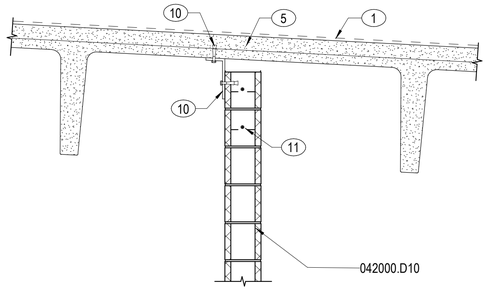

PROVIDE CONNECTION AT 8'-0" OC MAX.

B2 CMU WALL BRACE

3/4" = 1'-0" PAE101, PAE215, PAE311, PAE401

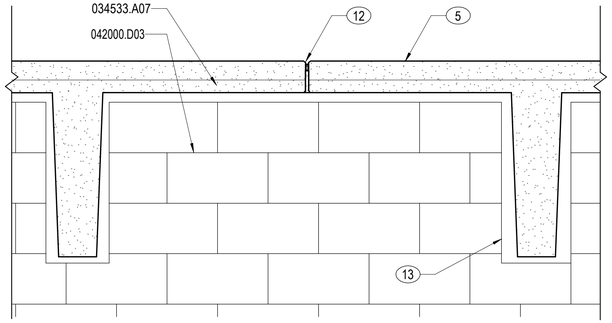

B3 TOP OF CMU WALL

1" = 1'-0"

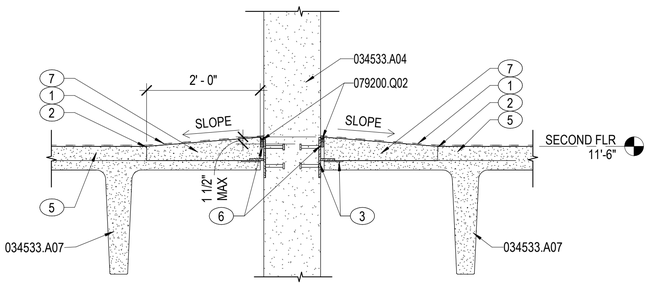

A3 CLOSURE SHEAR WALL CONNECTION

3/4" = 1'-0" PAE312

NOTES:

SHEET NOTES:

A REFER TO SHEET PAE001 FOR ARCHITECTURAL ABBREVIATIONS AND SYMBOLS.
B REFER TO VOLUME 1, SHEETS CS101-CS102 FOR CIVIL SITE INFORMATION.
C REFER TO SHEETS PAE531-PAE532 FOR TYPICAL PRECAST JOINT SEALANT, REVEAL/JOINT TYPES AND DIMENSIONS, AND SEALANT WEEP DETAILS.
D REFER TO SHEETS PAE581 FOR STANDING SEAM ROOFING DETAILS AND PAE582 FOR ROOF PV TRELLIS CANOPY SYSTEM ROOFING DETAILS.
E REFER TO SHEET PAE601 FOR EXTERIOR DOOR DETAILS AND SHEET PAE611 FOR CURTAINWALL AND LOUVER DETAILS.
F ARCHITECTURAL EXTERIOR DIMENSIONS ARE TO EXTERIOR FACE OF PRECAST PANEL, FACE OF METAL STUD, AND FACE OF CMU, UNO.

KEY NOTES (00)

1 CONCRETE SEALER.
2 TOOLED JOINT WITH SEALANT.
3 EMBED PLATE AND CONNECTION BY PRECAST PROVIDER.
4 BACKER ROD AND SEALANT AT ALL PRECAST TO PRECAST INTERSECTIONS.
5 MINIMUM TOPPING SLAB THICKNESS TO BE 3 1/2", SEE STRUCTURAL DRAWINGS FOR ADDITIONAL INFORMATION.
6 BOND BREAKER.
7 CONCRETE POUR STRIP.
8 CONCRETE CORBEL BY PRECAST MANUFACTURER.
9 PROVIDE DRIP REVEAL AT HEAD OF OPENINGS, TYPICAL.
10 REFER TO STRUCTURAL DETAIL FOR ANCHORING OF CMU WALL TO STRUCTURAL "T" SLOPE.
11 BOND BEAM, REFER TO STRUCTURAL DETAILS.
12 GROUT ALONG FULL LENGTH OF JOINT ABOVE 1 HOUR RATED STORAGE. REFER TO UL DESIGN NO. J804 FOR COMPLETE INFORMATION.
13 CMU TO WITHIN 1" OF PRECAST DOUBLE T.

MATERIAL NOTES

034533.A04	PRECAST/PRESTRESSED CONCRETE WALL PANEL
034533.A07	PRECAST/PRESTRESSED CONCRETE FLOOR DOUBLE TEE
034533.E12	PRECAST/PRESTRESSED CONCRETE BEARING PAD
042000.D03	CMU 8"
042000.D10	FIRE-RATED CMU
079200.Q02	BACKSTOP AND SEALANT

0 6" 1' 2' 3' 4'
1" = 1'-0" GRAPHIC SCALE

0 4" 1' 2' 3' 4' 5'
3/4" = 1'-0" GRAPHIC SCALE

NOTE:
IF THIS DRAWING IS LESS THAN 34" X 22"
IT IS A REDUCED SIZE DRAWING

NO.	DESCRIPTION	DATE	APPR
1	MOD P00005	05/2023	
2	MOD P00006 AND P00007	10/2025	

NAVFAC

STATE OF FLORIDA
BILLY KEITH HOLLOWAY
AR93022
REGISTERED ARCHITECT
SEAL

BAMFORTH
ENGINEERING ARCHITECTURE

AE INFO

APPROVED
FOR COMMANDER NAVFAC 11/26/2025
ACTIVITY
Approved by J. Scott Roberts,
Asset Management Branch Head &
Supervisory Facility Planner, PWD
Beaufort, SC via email.

SATISFACTORY TO DATE	12/15/2022
DES EAD DRW RWR CHK	BKH
PMDM	KTB / RLH
BRANCH MANAGER	CGM
CHIEF ENG/ARCH	EJA
FP ENGINEER	DSN

DEPARTMENT OF THE NAVY
NAVAL FACILITIES ENGINEERING SYSTEMS COMMAND
DC CO/DE:
MCAS BEAUFORT

NAVAL FACILITIES ENGINEERING SYSTEMS COMMAND – MID-ATLANTIC
NORFOLK, VA

BEAUFORT, SC

P-475 AIRCRAFT MAINTENANCE HANGAR - VOLUME 4 (PARKING GARAGE OPTION)

PARKING GARAGE - SECTION DETAILS

SCALE:	As indicated
EPROJECT NO.:	1363603
CONSTR. CONTR. NO.	
NAVFAC DRAWING NO.	12860341
SHEET	1120 OF 1412

PAE522

DRAWFORM REVISION: 25 AUGUST 2020

Autodesk Docs://20043 MWA 543 F39 Maintenance Hangar/20043 F39 Maint Hangar_Parking Facility.rvt
11/4/2025 1:13:32 PM

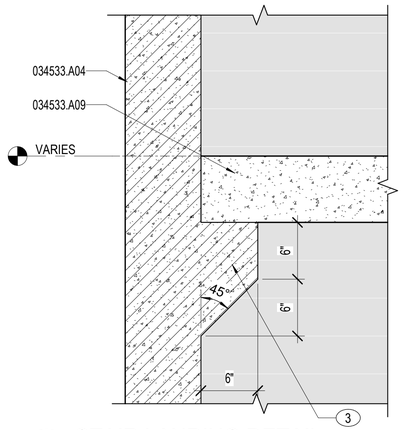

B1 STAIR LANDING DETAIL

1 1/2" = 1'-0" PAE421

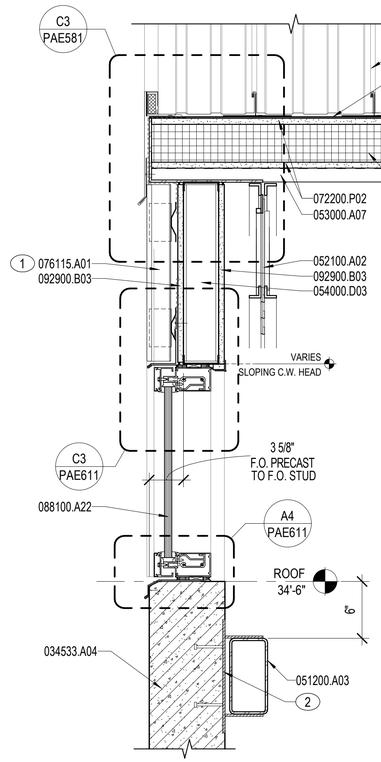

B2 SECTION DETAIL

1 1/2" = 1'-0" PAE401, PAE411, PAE412, PAE413, PAE601

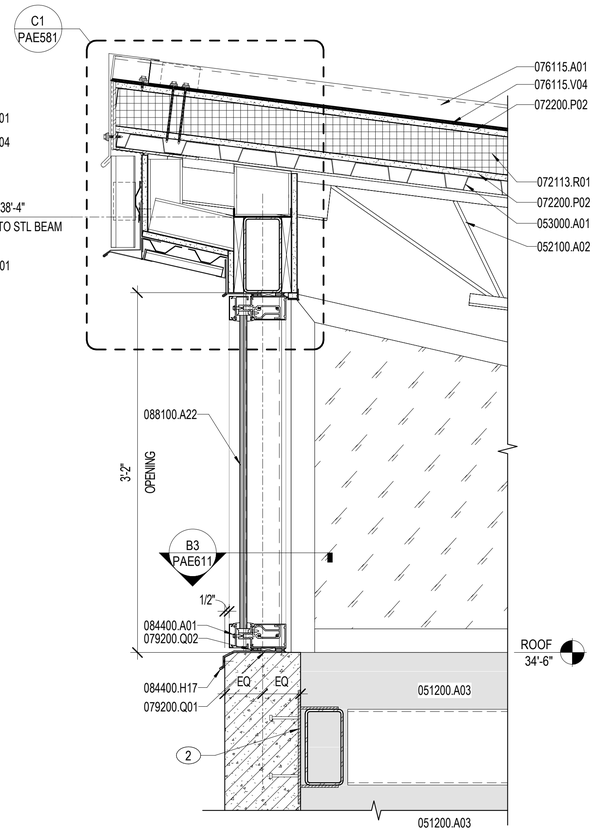

B3 SECTION DETAIL

1 1/2" = 1'-0" PAE421, PAE601

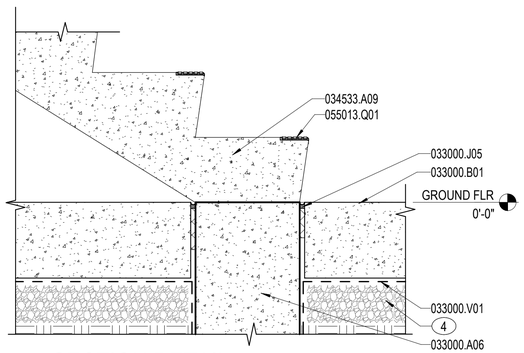

A1 SECTION DETAIL

1 1/2" = 1'-0" PAE421

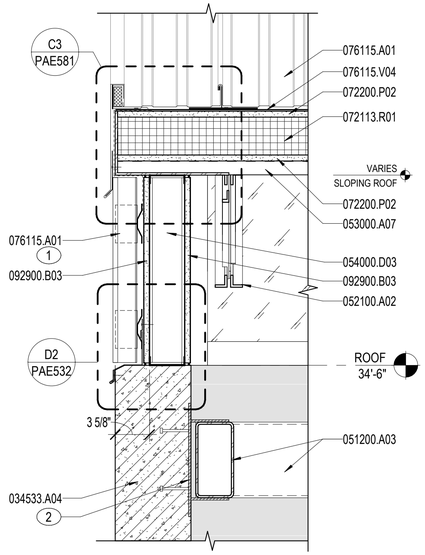

A2 SECTION DETAIL

1 1/2" = 1'-0" PAE421

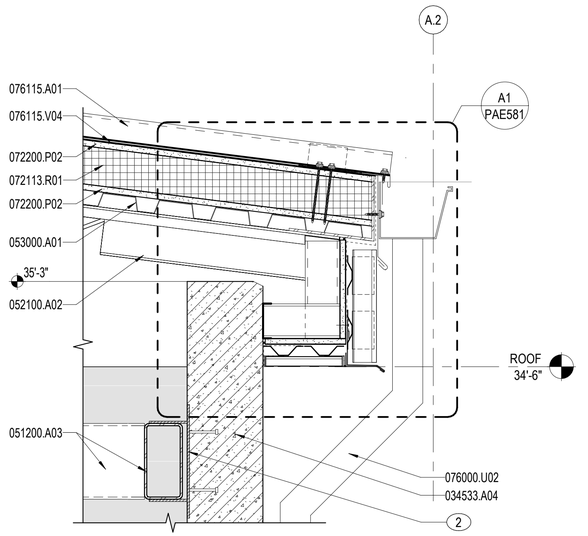

A3 SECTION DETAIL

1 1/2" = 1'-0" PAE421

NOTES:

SHEET NOTES:

A REFER TO SHEET PAE001 FOR ARCHITECTURAL ABBREVIATIONS AND SYMBOLS.
B REFER TO VOLUME 1, SHEETS CS101-CS102 FOR CIVIL SITE INFORMATION.
C REFER TO SHEETS PAE531-PAE532 FOR TYPICAL PRECAST JOINT SEALANT, REVEAL/JOINT TYPES AND DIMENSIONS, AND SEALANT WEEP DETAILS.
D REFER TO SHEETS PAE581 FOR STANDING SEAM ROOFING DETAILS AND PAE582 FOR ROOF PV TRELLIS CANOPY SYSTEM ROOFING DETAILS.
E REFER TO SHEET PAE601 FOR EXTERIOR DOOR DETAILS AND SHEET PAE611 FOR CURTAINWALL AND LOUVER DETAILS.
F ARCHITECTURAL EXTERIOR DIMENSIONS ARE TO EXTERIOR FACE OF PRECAST PANEL, FACE OF METAL STUD, AND FACE OF CMU, UNO.

KEY NOTES (00)

1 STANDING SEAM METAL ROOF PANEL IN VERTICAL APPLICATION.
2 EMBED PLATE BY PRECAST MANUFACTURER. REFER TO SHEET PSF411 FOR ADDITIONAL INFORMATION.
3 CONTINUOUS CONCRETE CORBEL BY PRECAST PROVIDER.
4 4" POROUS FILL.

MATERIAL NOTES

033000.A06	CONCRETE FOOTING
033000.B01	CONCRETE SLAB
033000.J05	PREFORMED JOINT FILLER
033000.V01	VAPOR RETARDER
034533.A04	PRECAST/PRESTRESSED CONCRETE WALL PANEL
034533.A09	PRECAST/PRESTRESSED CONCRETE STAIR
051200.A03	STEEL TUBE BEAM
052100.A02	OPEN WEB STEEL JOIST
053000.A01	STEEL DECK
053000.A07	STEEL ROOF DECK
054000.D03	METAL STUD 3 5/8"
055013.Q01	ABRASIVE SAFETY NOSING
072113.R01	BOARD INSULATION
072200.P02	GLASS MAT GYPSUM PROTECTION BOARD
076000.U02	DOWNSPOUT
076115.A01	STANDING-SEAM METAL ROOF PANEL
076115.V04	HIGH TEMPERATURE RESISTANT UNDERLAYMENT
079200.Q01	JOINT SEALANT
079200.Q02	BACKSTOP AND SEALANT
084400.A01	GLAZED ALUMINUM CURTAIN WALL ASSEMBLY
084400.H17	SILL FLASHING WITH END DAMS
088100.A22	INSULATING-LAMINATED GLASS UNIT
092900.B03	GLASS MAT FACED EXTERIOR GYPSUM SHEATHING 5/8"

0 2" 10" 20" 30"
1½" = 1'-0" GRAPHIC SCALE

NOTE:
IF THIS DRAWING IS LESS THAN 34" X 22"
IT IS A REDUCED SIZE DRAWING

NUM	DESCRIPTION	DATE	APPR
1	MOD P00005	05/2023	
2	MOD P00006 AND P00007	10/2025	

NAVFAC

STATE OF FLORIDA
BILLY KEITH HOLLOWAY
AR93022
REGISTERED ARCHITECT
SEAL

BAMFORTH ENGINEERING ARCHITECTURE
AE INFO

APPROVED
FOR COMMANDER NAVFAC 11/21/2025
ACTIVITY Approved by J. Scott Roberts, Asset Management Branch Head & Supervisory Facility Planner, PWD Beaufort, SC via email.
SATISFACTORY TO DATE 12/15/2022
DES EAD | DRW MCL | CHK BKH
PM/DM KTB / RLH
BRANCH MANAGER CGM
CHIEF ENG/ARCH EJA
FP ENGINEER DSN

DEPARTMENT OF THE NAVY
NAVAL FACILITIES ENGINEERING SYSTEMS COMMAND
DC CORE
NAVAL FACILITIES ENGINEERING SYSTEMS COMMAND - MID-ATLANTIC
NORFOLK, VA
MCAS BEAUFORT
BEAUFORT, SC
P-475 AIRCRAFT MAINTENANCE HANGAR - VOLUME 4 (PARKING GARAGE OPTION)
PARKING GARAGE - SECTION DETAILS

SCALE: 1 1/2" = 1'-0"
EPROJECT NO.: 1363603
CONSTR. CONTR. NO.
NAVFAC DRAWING NO. 12860342
SHEET 1121 OF 1412

PAE523

DRAWFORM REVISION: 25 AUGUST 2020

Autodesk Docs://20042 MAFA1 500 735 Maintenance Hangar/20042 735 Maint Hangar_Parking Facility.rvt
11/4/2025 1:13:57 PM

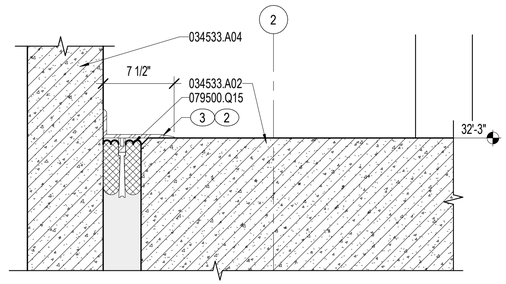

D4 SECTION DETAIL - SEISMIC JOINT

1 1/2" = 1'-0"

PAE421, PAE501

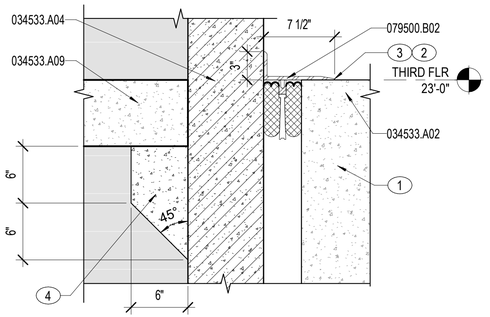

C4 SECTION DETAIL - SEISMIC JOINT

1 1/2" = 1'-0"

PAE411, PAE412, PAE413, PAE421

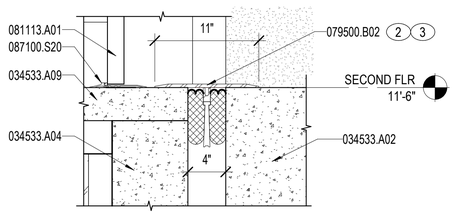

B4 SECTION DETAIL - SEISMIC JOINT

1 1/2" = 1'-0"

PAE411, PAE412, PAE413, PAE421

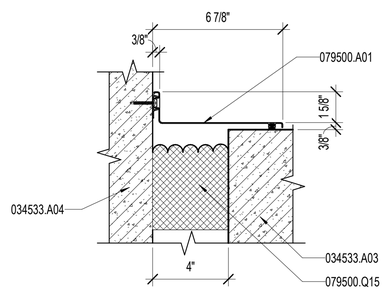

A2 PLAN DETAIL - VERTICAL S.J. COVER

3" = 1'-0"

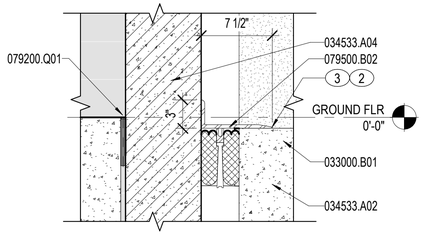

A4 SECTION DETAIL - SEISMIC JOINT

1 1/2" = 1'-0"

PAE101, PAE411, PAE412, PAE413, PAE421

NOTES:

SHEET NOTES:

A REFER TO SHEET PAE001 FOR ARCHITECTURAL ABBREVIATIONS AND SYMBOLS.

B REFER TO VOLUME 1, SHEETS CS101-CS102 FOR CIVIL SITE INFORMATION.

C REFER TO SHEETS PAE531-PAE532 FOR TYPICAL PRECAST JOINT SEALANT, REVEAL/JOINT TYPES AND DIMENSIONS, AND SEALANT WEEP DETAILS.

D REFER TO SHEETS PAE581 FOR STANDING SEAM ROOFING DETAILS AND PAE582 FOR ROOF PV TRELLIS CANOPY SYSTEM ROOFING DETAILS.

E REFER TO SHEET PAE601 FOR EXTERIOR DOOR DETAILS AND SHEET PAE611 FOR CURTAINWALL AND LOUVER DETAILS.

F ARCHITECTURAL EXTERIOR DIMENSIONS ARE TO EXTERIOR FACE OF PRECAST PANEL, FACE OF METAL STUD, AND FACE OF CMU, UNO.

KEY NOTES (00)

1 CONCRETE SLAB BEAMS. REFER TO STRUCTURAL DRAWINGS.

2 SEISMIC JOINT MANUFACTURER'S TO PROVIDE AN ADDITIONAL COAT TO MATCH CONCRETE SLAB AND CONCEAL THE SEISMIC JOINT FROM PUBLIC VIEW AT CONCRETE SLAB EXTERIOR EDGES.

3 DECK TO DECK SEISMIC JOINT COVER TO LINE UP WITH DECK TO WALL SEISMIC JOINT COVER EDGE.

4 CONTINUOUS CONCRETE CORBEL BY PRECAST.

MATERIAL NOTES

033000.B01	CONCRETE SLAB
034533.A02	PRECAST/PRESTRESSED CONCRETE BEAM
034533.A03	PRECAST/PRESTRESSED CONCRETE COLUMN
034533.A04	PRECAST/PRESTRESSED CONCRETE WALL PANEL
034533.A09	PRECAST/PRESTRESSED CONCRETE STAIR
079200.Q01	JOINT SEALANT
079500.A01	EXPANSION JOINT, EXTERIOR METAL FRAME AND COVER
079500.B02	SEISMIC JOINT SYSTEM, FLOOR
079500.Q15	WEATHER-FACED PREFORMED FOAM EXPANSION JOINT
081113.A01	STEEL DOOR
087100.S20	THRESHOLD

0 2" 10" 20" 30"

1½" = 1'-0" GRAPHIC SCALE

NOTE:
IF THIS DRAWING IS LESS THAN 34" X 22"
IT IS A REDUCED SIZE DRAWING

NUM	DESCRIPTION	DATE	APPR
1	MOD P00005	05/2023	
2	MOD P00006 AND P00007	10/2025	

NAVFAC

STATE OF FLORIDA
BILLY KEITH HOLLOWAY
AR93022
REGISTERED ARCHITECT
SEAL

BAMFORTH ENGINEERING ARCHITECTURE
AE INFO

APPROVED
FOR COMMANDER NAVFAC 11/26/2025

ACTIVITY: Approved by J. Scott Roberts, Asset Management Branch Head & Supervisory Facility Planner, PWD Beaufort, SC via email.

SATISFACTORY TO DATE 12/15/2022

DES	EAD	DRW	MEC	CHK	BKH
PM/DM					KTB / RLH
BRANCH MANAGER					CGM
CHIEF ENG/ARCH					EJA
FP ENGINEER					DSN

DEPARTMENT OF THE NAVY
NAVAL FACILITIES ENGINEERING SYSTEMS COMMAND
DC CORE

NAVAL FACILITIES ENGINEERING SYSTEMS COMMAND - MID-ATLANTIC
NORFOLK, VA

MCAS BEAUFORT
BEAUFORT, SC

P-475 AIRCRAFT MAINTENANCE HANGAR - VOLUME 4 (PARKING GARAGE OPTION)

PARKING GARAGE - SECTION DETAILS

SCALE: As indicated

EPROJECT NO.: 1363603

CONSTR. CONTR. NO.

NAVFAC DRAWING NO. 12860343

SHEET 1122 OF 1412

PAE524

DRAWFORM REVISION: 25 AUGUST 2020

Autodesk Docs://20042 MAFA 1503 F35 Maintenance Hangar/20042 F35 Maint Hangar - Parking Facility.rvt
11/4/2025 1:14:01 PM

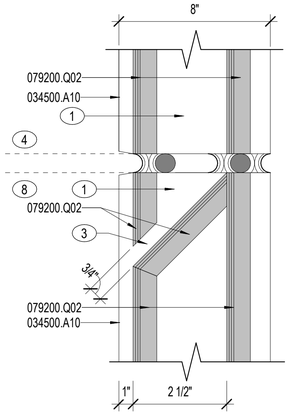

C2 SECTION AT MID-JOINT
3" = 1'-0"

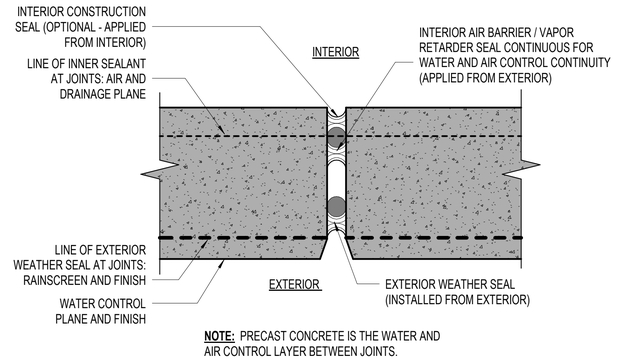

NOTE: PRECAST CONCRETE IS THE WATER AND AIR CONTROL LAYER BETWEEN JOINTS.

C3 TWO-STAGE JOINT SYSTEM
3" = 1'-0"

NOTES:

SHEET NOTES:

A REFER TO SHEET PAE001 FOR ARCHITECTURAL ABBREVIATIONS AND SYMBOLS.
B REFER TO SHEETS PAE211-PAE216 FOR PANEL JOINT AND REVEAL LOCATIONS.
C REFER TO SHEETS PAE221-PAE229 FOR PRECAST PANEL ELEVATIONS.
D PRECAST PANELS ARE BASED ON A 1" JOINT BETWEEN PANELS. PRECAST PANEL REVEALS ARE BASED ON A 3/4" REVEAL. PRECAST PANEL REVEALS DIMENSIONED TO THE TOP OF REVEAL, UNO.

KEY NOTES (00)

1 DRAINAGE SPACE.
2 PROVIDE SEALANT BEAD ON INTERIOR SIDE OF PRECAST PANEL WHEN INTERIOR FACE IS TO BE LEFT EXPOSED.
3 DRAINAGE OPENING. 1/2 MIN.
4 TOP OF REVEAL.
5 WEEP.
6 LINE OF GRADE.
7 WHEN BACK SIDE OF PRECAST PANEL IS EXPOSED TO THE EXTERIOR AT TOP OF PARAPETS, REVERSE BACKER ROD & SEALANT SUCH THAT SEALANT IS ALWAYS TO THE EXTERIOR SIDE OF PRECAST PANEL.
8 BOTTOM OF REVEAL.

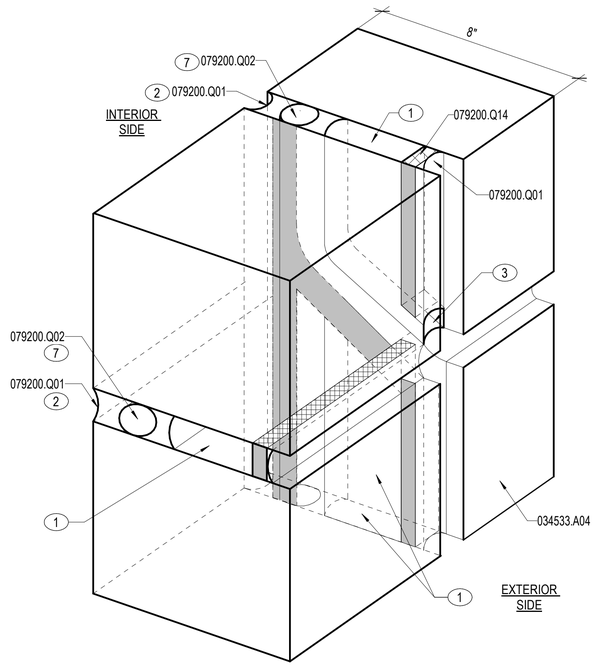

A1 TWO-STAGE JOINT SYSTEM
3" = 1'-0"

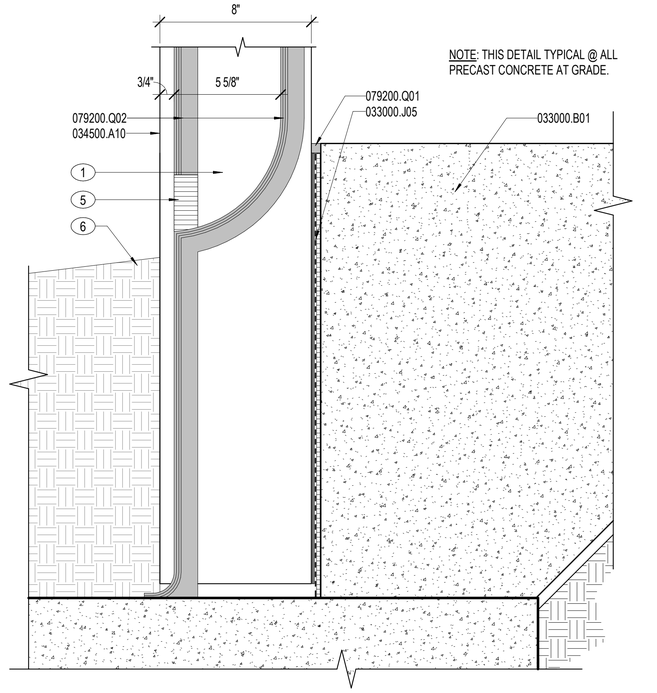

NOTE: THIS DETAIL TYPICAL @ ALL PRECAST CONCRETE AT GRADE.

A3 DOUBLE SEALANT AT GRADE - TYP
3" = 1'-0"

MATERIAL NOTES

033000.B01	CONCRETE SLAB
033000.J05	PREFORMED JOINT FILLER
034500.A10	PRECAST CONCRETE INSULATED WALL PANEL
034533.A04	PRECAST/PRESTRESSED CONCRETE WALL PANEL
079200.Q01	JOINT SEALANT
079200.Q02	BACKSTOP AND SEALANT
079200.Q14	PREFORMED FOAM JOINT FILLER

0 1" 5" 10" 15"
3" = 1'-0" GRAPHIC SCALE

NOTE:
IF THIS DRAWING IS LESS THAN 34" X 22"
IT IS A REDUCED SIZE DRAWING

NO.	DESCRIPTION	DATE	APPR
1	MOD P00005	05/2023	
2	MOD P00006 AND P00007	10/2025	

NAVFAC

STATE OF FLORIDA
BILLY KEITH HOLLOWAY
AR93022
REGISTERED ARCHITECT
SEAL

BAMFORTH
ENGINEERING ARCHITECTURE
AE INFO

APPROVED
FOR COMMANDER NAVFAC 11/21/2025

ACTIVITY
Approved by J. Scott Roberts,
Asset Management Branch Head &
Supervisory Facility Planner, PWD
Beaufort, SC via email.

SATISFACTORY TO DATE	12/15/2022
DES EAD / DRW MEC / CHK BKH	
PMDM	KTB / RLH
BRANCH MANAGER	CGM
CHIEF ENGARCH	EJA
FP ENGINEER	DSN

DEPARTMENT OF THE NAVY
NAVAL FACILITIES ENGINEERING SYSTEMS COMMAND
DC CODE:
NAVAL FACILITIES ENGINEERING SYSTEMS COMMAND – MID-ATLANTIC
NORFOLK, VA
MCAS BEAUFORT
BEAUFORT, SC
P-475 AIRCRAFT MAINTENANCE HANGAR - VOLUME 4 (PARKING GARAGE OPTION)
PARKING GARAGE - TYPICAL PRECAST CONCRETE PANEL DETAILS - TWO-STAGE JOINT SYSTEM

SCALE:	3" = 1'-0"
EPROJECT NO.:	1363603
CONSTR. CONTR. NO.	
NAVFAC DRAWING NO.	12860344
SHEET	1123 OF 1412

PAE531

DRAWFORM REVISION 25 AUGUST 2020

Autodesk Docs://20042 MFAT 102 F35 Maintenance Hangar 20042 735 Maint Hangar_Parking Facility.rvt
11/4/2025 1:14:01 PM

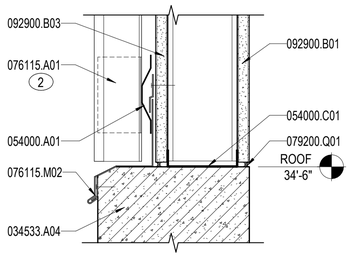

D2 SECTION DETAIL
3" = 1'-0" PAE523

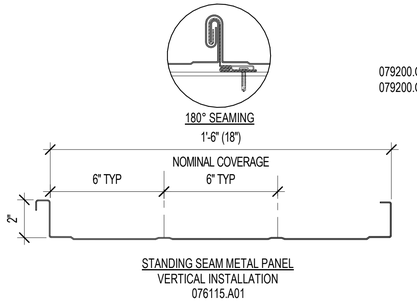

D3 METAL WALL PANEL PROFILES
3" = 1'-0"

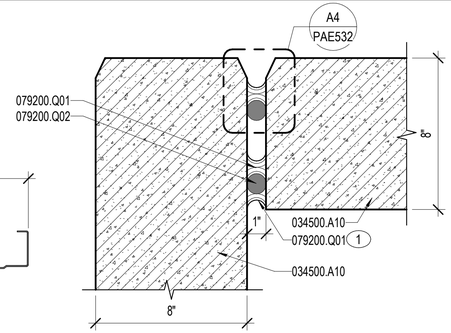

D4 BUTT CORNER JOINT - TYP
3" = 1'-0" PAE411

NOTES:

SHEET NOTES:

A REFER TO SHEET PAE001 FOR ARCHITECTURAL ABBREVIATIONS AND SYMBOLS.
B REFER TO SHEETS PAE211-PAE216 FOR PANEL JOINT AND REVEAL LOCATIONS.
C REFER TO SHEETS PAE221-PAE229 FOR PRECAST PANEL ELEVATIONS.
D PRECAST PANELS ARE BASED ON A 1" JOINT BETWEEN PANELS. PRECAST PANEL REVEALS ARE BASED ON A 3/4" REVEAL. PRECAST PANEL REVEALS DIMENSIONED TO THE TOP OF REVEAL, UNO.

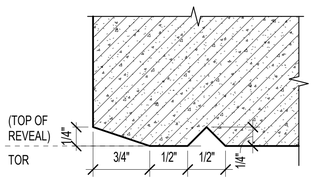

C2 DRIP EDGE - TYP
12" = 1'-0"

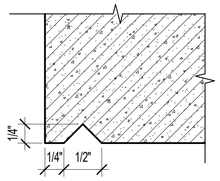

C3 DRIP EDGE - TYP
12" = 1'-0"

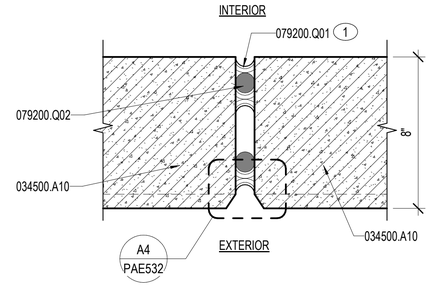

C4 PANEL JOINT - CHAMFER - TYP
3" = 1'-0"

KEY NOTES (00)

1 PROVIDE SEALANT BEAD ON INTERIOR SIDE OF PRECAST PANEL WHEN INTERIOR FACE IS TO BE LEFT EXPOSED.
2 STANDING SEAM METAL ROOF PANEL IN VERTICAL APPLICATION.

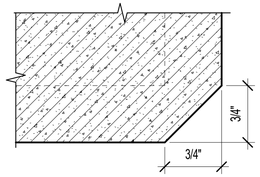

B3 CHAMFER - TYP
12" = 1'-0"

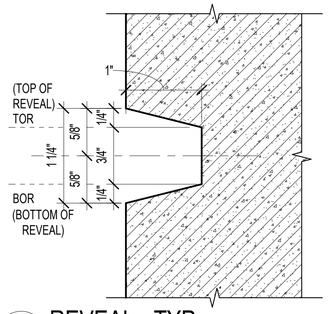

B4 REVEAL - TYP
12" = 1'-0" PAE221-PAE229

MATERIAL NOTES

034500.A10	PRECAST CONCRETE INSULATED WALL PANEL
034533.A04	PRECAST/PRESTRESSED CONCRETE WALL PANEL
054000.A01	METAL FRAMING
054000.C01	METAL STUD RUNNER TRACK
076115.A01	STANDING-SEAM METAL ROOF PANEL
076115.M02	DRIP EDGE
079200.Q01	JOINT SEALANT
079200.Q02	BACKSTOP AND SEALANT
092900.B01	GYPSUM BOARD, GLASS MAT FACED 5/8"
092900.B03	GLASS MAT FACED EXTERIOR GYPSUM SHEATHING 5/8"

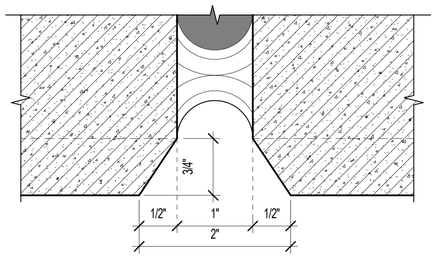

A4 PANEL JOINT - CHAMFER - TYP
12" = 1'-0" PAE532

0 2" 4" 8" 1'
3" = 1'-0" GRAPHIC SCALE

0 ½" 1" 2" 3" 4"
1'-0" = 1'-0" GRAPHIC SCALE

NOTE:
IF THIS DRAWING IS LESS THAN 34" X 22"
IT IS A REDUCED SIZE DRAWING

NO.	DESCRIPTION	DATE	APPR
1	MOD P00005	05/2023	
2	MOD P00006 AND P00007	10/2025	

NAVFAC

STATE OF FLORIDA
BILLY KEITH HOLLOWAY
AR93022
REGISTERED ARCHITECT
SEAL

BAMFORTH
ENGINEERING CONSULTANTS
AE INFO

APPROVED
FOR COMMANDER NAVFAC 11/6/2025
ACTIVITY
Approved by J. Scott Roberts,
Asset Management Branch Head &
Supervisory Facility Planner, PWD
Beaufort, SC via email.

SATISFACTORY TO DATE	12/15/2022
DES EAD / DRW MEC / CHK BKH	
PM/DM	KTB / RLH
BRANCH MANAGER	CGM
CHIEF ENG/ARCH	EJA
FP ENGINEER	DSN

DEPARTMENT OF THE NAVY
NAVAL FACILITIES ENGINEERING SYSTEMS COMMAND
DC CODE:
MCAS BEAUFORT
NAVAL FACILITIES ENGINEERING SYSTEMS COMMAND ~ MID-ATLANTIC
NORFOLK, VA
BEAUFORT, SC
P-475 AIRCRAFT MAINTENANCE HANGAR - VOLUME 4 (PARKING GARAGE OPTION)
PARKING GARAGE - TYPICAL PRECAST CONCRETE AND METAL WALL PANEL DETAILS

SCALE:	As indicated
EPR/PROJECT NO.:	1363603
CONSTR. CONTR. NO.	
NAVFAC DRAWING NO.:	12860345
SHEET	1124 OF 1412

PAE532

DRAWFORM REVISION: 25 AUGUST 2020

Autodesk Docs://20043 MAFAT 103 F35 Maintenance Hangar/20043 F35 Maint Hangar_Parking Facility.rvt
11/4/2025 1:14:03 PM

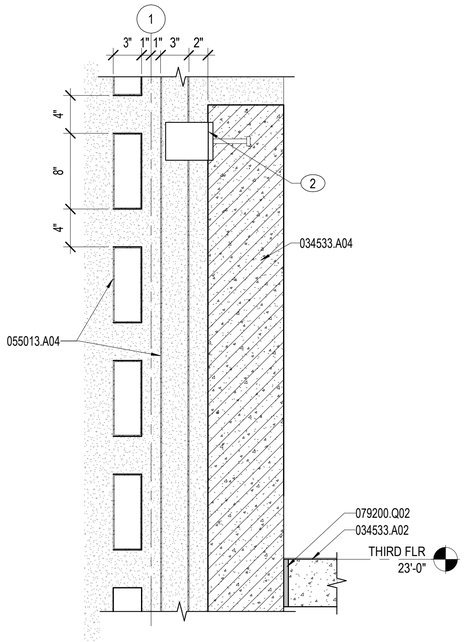

C1 SECTION DETAIL
1 1/2" = 1'-0"
PAE551

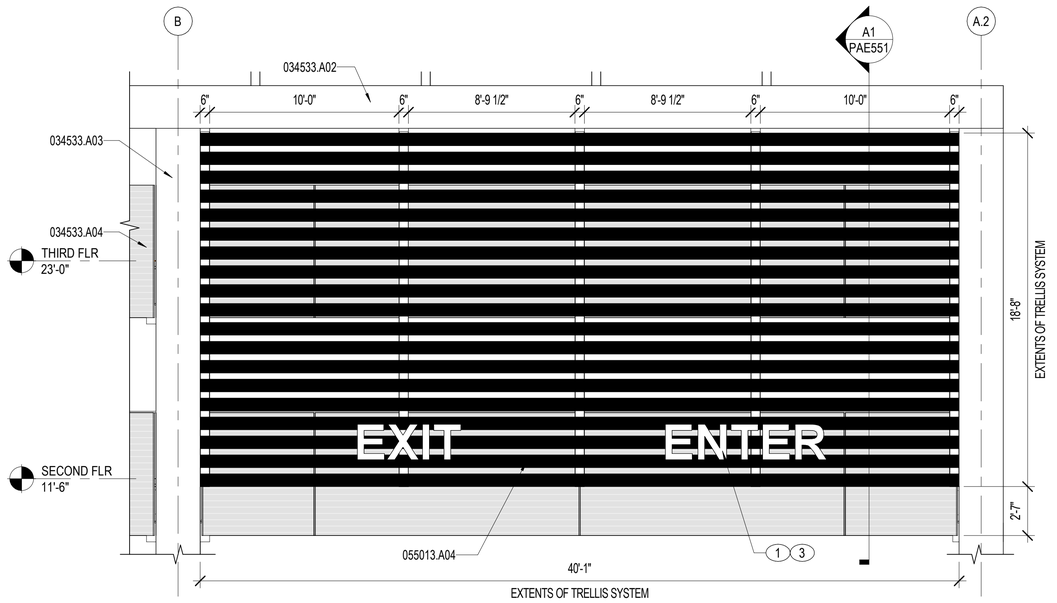

C2 SCREEN / VISION BARRIER ELEVATION - EAST ENTRANCE
1/4" = 1'-0"
PAE201, PAE213, PAE401

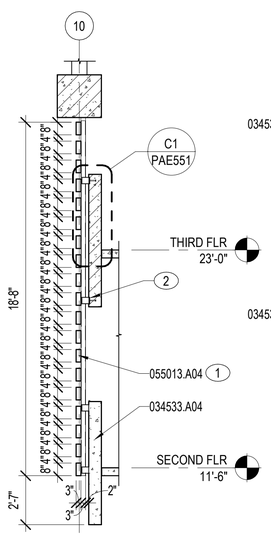

A1 SECTION
1/4" = 1'-0"
PAE413, PAE551

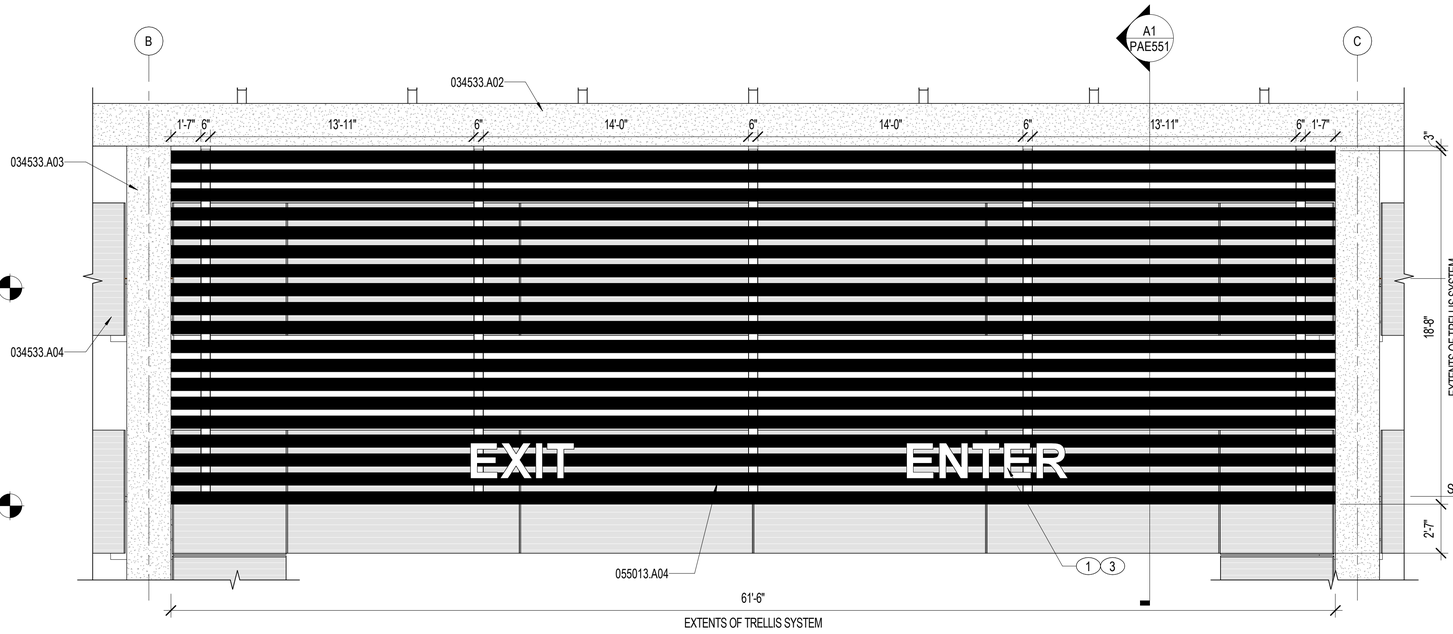

A2 SCREEN / VISION BARRIER ELEVATION - WEST ENTRANCE
1/4" = 1'-0"
PAE201, PAE211

NOTES:

SHEET NOTES:

A REFER TO SHEET PAE001 FOR ARCHITECTURAL ABBREVIATIONS AND SYMBOLS.

B ARCHITECTURAL EXTERIOR DIMENSIONS ARE TO EXTERIOR FACE OF PRECAST PANEL, FACE OF METAL STUD, AND FACE OF CMU, UNO.

KEY NOTES (00)

1 SCREEN / VISION BARRIER WITH SIGNAGE LETTERS.

2 EMBED PLATE BY PRECAST MANUFACTURER. REFER TO SHEET PSF411 FOR ADDITIONAL INFORMATION.

3 GARAGE AND ENTRY/EXIT SIGNAGE LETTERS.

MATERIAL NOTES

034533.A02	PRECAST/PRESTRESSED CONCRETE BEAM
034533.A03	PRECAST/PRESTRESSED CONCRETE COLUMN
034533.A04	PRECAST/PRESTRESSED CONCRETE WALL PANEL
055013.A04	EXTRUDED ALUMINUM TUBE
079200.Q02	BACKSTOP AND SEALANT

0 6" 1' 2'
1½" = 1'-0" GRAPHIC SCALE

0 1' 5' 10' 15'
1/4" = 1'-0" GRAPHIC SCALE

NOTE:
IF THIS DRAWING IS LESS THAN 34" X 22"
IT IS A REDUCED SIZE DRAWING

SYM	DESCRIPTION	DATE	APPR
1	MOD P00005	05/2023	
2	MOD P00006 AND P00007	10/2025	

NAVFAC

STATE OF FLORIDA
BILLY KEITH HOLLOWAY
AR93022
REGISTERED ARCHITECT
SEAL

BAMFORTH
ENGINEERS + SURVEYORS

A/E INFO

APPROVED
FOR COMMANDER NAVFAC 11/21/2025

ACTIVITY
Approved by J. Scott Roberts, Asset Management Branch Head & Supervisory Facility Planner, PWD Beaufort, SC via email.

SATISFACTORY TO DATE	12/15/2022
DES EAD	DRW MEC CHK BKH
PM/DM	KTB / RLH
BRANCH MANAGER	CGM
CHIEF ENG/ARCH	EJA
FP ENGINEER	DSN

DEPARTMENT OF THE NAVY
NAVAL FACILITIES ENGINEERING SYSTEMS COMMAND
NAVAL FACILITIES ENGINEERING SYSTEMS COMMAND ~ MID-ATLANTIC
NORFOLK, VA
DC CORE
MCAS BEAUFORT
BEAUFORT, SC
P-475 AIRCRAFT MAINTENANCE HANGAR - VOLUME 4 (PARKING GARAGE OPTION)
PARKING GARAGE - SCREEN / VISION BARRIER ELEVATIONS AND DETAILS

SCALE: As indicated
EPROJECT NO.: 1363603
CONSTR. CONTR. NO.
NAVFAC DRAWING NO. 12860346
SHEET 1125 OF 1412

PAE551

DRAWFORM REVISION: 25 AUGUST 2020

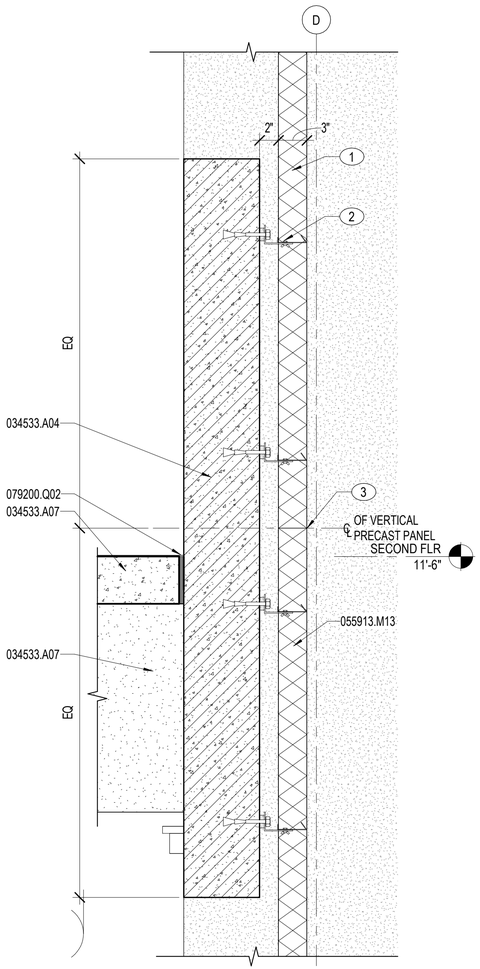

A1 WELDED WIRE PANEL SECTION
1 1/2" = 1'-0"
PAE311, PAE552

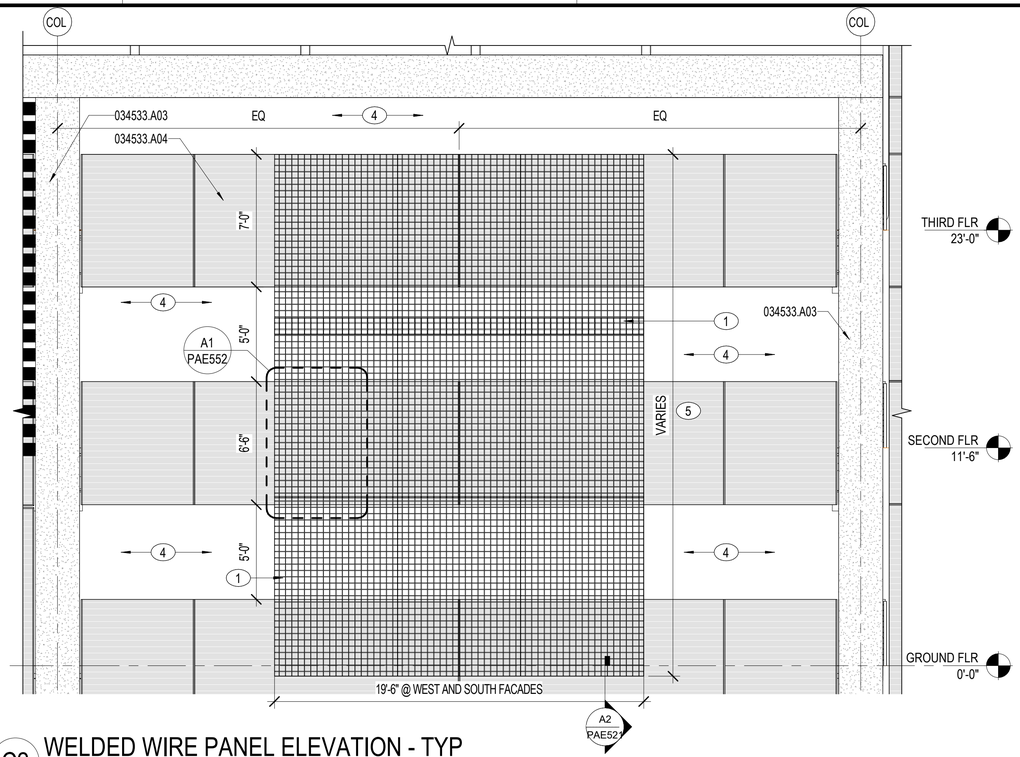

C2 WELDED WIRE PANEL ELEVATION - TYP
1/4" = 1'-0"
PAE201, PAE214

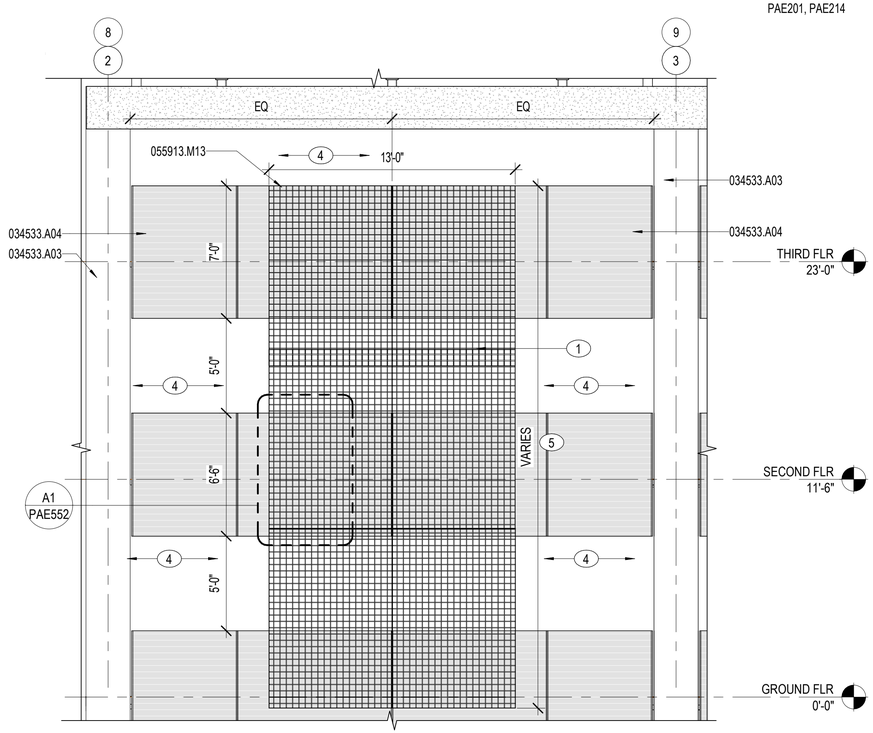

A3 WELDED WIRE PANEL ELEVATION @ SOUTH FACADE
1/4" = 1'-0"
PAE201, PAE214

NOTES:

SHEET NOTES:

A REFER TO SHEET PAE001 FOR ARCHITECTURAL ABBREVIATIONS AND SYMBOLS.

B ARCHITECTURAL EXTERIOR DIMENSIONS ARE TO EXTERIOR FACE OF PRECAST PANEL, FACE OF METAL STUD, AND FACE OF CMU, UNO.

KEY NOTES (00)

1 WELDED WIRE PANEL PLANT SUPPORT SYSTEM.
2 MOUNTING CLIP, TYP.
3 PANEL JOINT.
4 OPEN.
5 FOR HEIGHT SEE ENLARGED ELEVATIONS PAE211 AND PAE214.

MATERIAL NOTES

034533.A03	PRECAST/PRESTRESSED CONCRETE COLUMN
034533.A04	PRECAST/PRESTRESSED CONCRETE WALL PANEL
034533.A07	PRECAST/PRESTRESSED CONCRETE FLOOR DOUBLE TEE
055913.M13	EXTERIOR TRELLIS
079200.Q02	BACKSTOP AND SEALANT

0 ½" 1" 2" 3" 4"
1'-0" = 1'-0" GRAPHIC SCALE

NOTE:
IF THIS DRAWING IS LESS THAN 34" X 22"
IT IS A REDUCED SIZE DRAWING

SYM	DESCRIPTION	DATE	APPR
1	MOD P00005	05/2023	
2	MOD P00006 AND P00007	10/2025	

NAVFAC

STATE OF FLORIDA
BILLY KEITH HOLLOWAY
AR93022
REGISTERED ARCHITECT
11-13-23
SEAL

BAMFORTH
ENGINEERS + SURVEYORS

AE INFO

APPROVED
FOR COMMANDER NAVFAC 11/21/2025

ACTIVITY
Approved by J. Scott Roberts, Asset Management Branch Head & Supervisory Facility Planner, PWD Beaufort, SC via email.

SATISFACTORY TO DATE	12/15/2022
DES EAD	DRW MEC CHK BKH
PM/DM	KTB / RLH
BRANCH MANAGER	CGM
CHIEF ENG/ARCH	EJA
FP ENGINEER	DSN

DEPARTMENT OF THE NAVY
NAVAL FACILITIES ENGINEERING SYSTEMS COMMAND
DC CORE
NAVAL FACILITIES ENGINEERING SYSTEMS COMMAND ~ MID-ATLANTIC
NORFOLK, VA

MCAS BEAUFORT
BEAUFORT, SC
P-475 AIRCRAFT MAINTENANCE HANGAR - VOLUME 4 (PARKING GARAGE OPTION)
PARKING GARAGE - WELDED WIRE PANEL ELEVATIONS AND SECTION

SCALE:	As indicated
EPROJECT NO.:	1363603
CONSTR. CONTR. NO.	
NAVFAC DRAWING NO.	12860347
SHEET	1126 OF 1412

PAE552

DRAWFORM REVISION: 25 AUGUST 2020

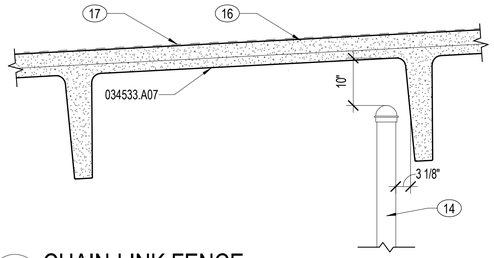

D3 CHAIN-LINK FENCE
3/4" = 1'-0" PAE301

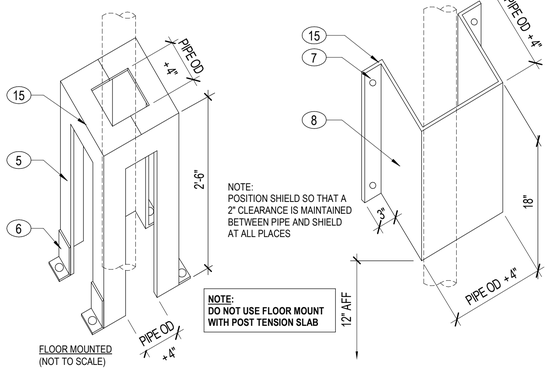

NOTE: FINISH AFTER FABRICATION ; HOT-DIP GALVANIZE

B2 PIPE GUARD DETAIL
1" = 1'-0" PAE101, PAE102, PAE103, PAE502

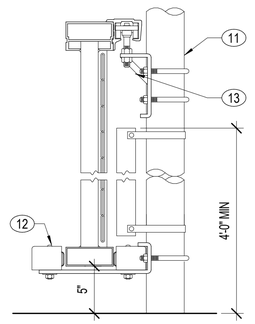

B3 CHAIN-LINK FENCE GATE SECTION
1 1/2" = 1'-0"

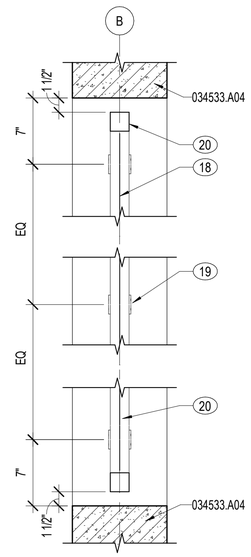

A1 SHEAR WALL MESH PANEL
1 1/2" = 1'-0" PAE421

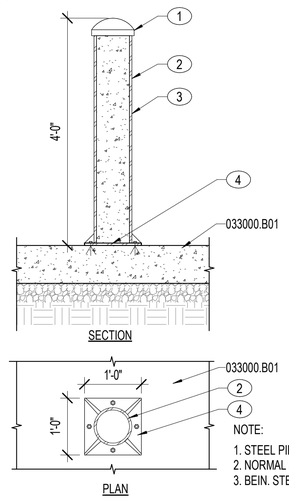

A2 BOLLARD, SURFACE-MOUNTED
3/4" = 1'-0" PAE101, PAE102, PAE103, PAE213, PAE215, PAE301, PAE401, PAE402 PAE411, PAE412, PAE413, PAE502

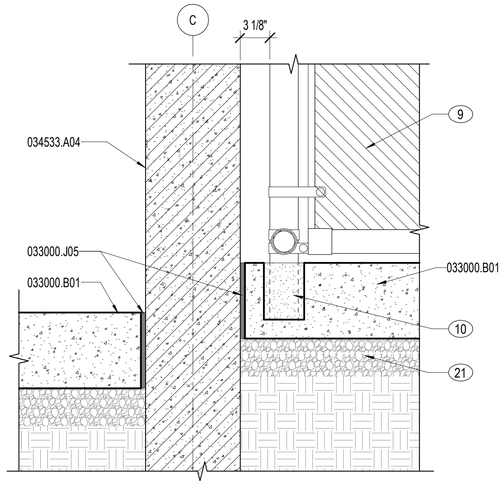

A3 CHAIN-LINK FENCE BASE
1 1/2" = 1'-0" PAE101

NOTES:

SHEET NOTES:

A REFER TO SHEET PAE001 FOR ARCHITECTURAL ABBREVIATIONS AND SYMBOLS.

B ARCHITECTURAL EXTERIOR DIMENSIONS ARE TO EXTERIOR FACE OF PRECAST PANEL, FACE OF METAL STUD, AND FACE OF CMU, UNO.

KEY NOTES (00)

1 3" DOME CAP OVER END OF PIPE-FILL POST CAP WITH CONCRETE.
2 6" DIA SCHEDULE 80 STEEL PIPE FILLED WITH CONCRETE.
3 PAINT PIPE WITH 4" WIDE HORIZONTAL STRIPS-ALTERNATING BETWEEN "FLAT BLACK" AND "GLOSSY SAFETY YELLOW". GALVANIZE-COAT CUT ENDS PRIOR TO INSTALLATION AND PAINTING.
4 12"X12"X1/2" STEEL BASE PLATE WITH 4-3/8" DIA. EXPANSION ANCHORS WITH 2 1/2" MINIMUM EMBEDMENT
5 ALL MEMBERS TO BE ANGLES 3"X3"X1/4" WITH ALL ANGLES TO ANGLE CONNECTIONS WELDED.
6 ATTACH TO FLOOR WITH ANGLE 3"X3"X1/4"X0'-3" CLIPS WITH 1/2" DIA EXPANSION BOLTS WITH 2 1/4" MINIMUM EMBEDMENT.
7 ATTACH TO WALL WITH 1/2" DIAMETER EXPANSION BOLTS EACH SIDE.
8 1/4" STEEL PLATE BENT TO FORM A PROTECTIVE PIPE GUARD.
9 CHAIN LINK FENCE WITH 6' DOUBLE GATE OPENING.
10 CHAIN LINK FENCE POST FOUNDATION ANCHOR AS RECOMMENDED BY SELECTED FENCE MFR, TYP.
11 FENCE POST.
12 BOTTOM GUIDE.
13 GATE HANGER.
14 8' HIGH GALVANIZED CHAIN LINK FENCE, SPACE POSTS AT 8'-0" OC MAX.
15 GRIND SMOOTH ALL CORNERS, NO SHARP EDGES ALLOWED.
16 TOPPING SLAB, SEE STRUCTURAL DRAWINGS FOR ADDITIONAL INFORMATION.
17 CONCRETE SEALER.
18 WIRE MESH 2" ON CENTER.
19 METAL CLIP ATTACHED TO PRECAST PANEL.
20 2"x2" METAL FENCE FRAME.
21 4" POROUS FILL.

MATERIAL NOTES

033000.B01 CONCRETE SLAB
033000.J05 PREFORMED JOINT FILLER
034533.A04 PRECAST/PRESTRESSED CONCRETE WALL PANEL
034533.A07 PRECAST/PRESTRESSED CONCRETE FLOOR DOUBLE TEE

0 6" 1' 2' 3' 4'
1" = 1'-0" GRAPHIC SCALE

0 6" 1' 2'
1½" = 1'-0" GRAPHIC SCALE

0 4" 1' 2' 3' 4' 5'
3/4" = 1'-0" GRAPHIC SCALE

NOTE:
IF THIS DRAWING IS LESS THAN 34" X 22"
IT IS A REDUCED SIZE DRAWING

NO.	DESCRIPTION	DATE	APPR
1	MOD P00005	05/2023	
2	MOD P00006 AND P00007	10/2025	

NAVFAC

STATE OF FLORIDA
BILLY KEITH HOLLOWAY
AR93022
REGISTERED ARCHITECT
SEAL

BAMFORTH
ENGINEERING ARCHITECTURE
AE INFO

APPROVED
FOR COMMANDER NAVFAC 11/21/2025
ACTIVITY
Approved by J. Scott Roberts,
Asset Management Branch Head &
Supervisory Facility Planner, PWD
Beaufort, SC via email.

SATISFACTORY TO DATE 12/15/2022

DES	EAD	DRW	RWR	CHK	BKH
PMDM					KTB / RLH
BRANCH MANAGER					CGM
CHIEF ENG/ARCH					EJA
FP ENGINEER					DSN

DEPARTMENT OF THE NAVY
NAVAL FACILITIES ENGINEERING SYSTEMS COMMAND
DC CORE:
NAVAL FACILITIES ENGINEERING SYSTEMS COMMAND ~ MID-ATLANTIC
NORFOLK, VA
MCAS BEAUFORT
BEAUFORT, SC
P-475 AIRCRAFT MAINTENANCE HANGAR - VOLUME 4 (PARKING GARAGE OPTION)
PARKING GARAGE - MISCELLANEOUS DETAILS

SCALE: As indicated
EPROJECT NO.: 1363603
CONSTR. CONTR. NO.
NAVFAC DRAWING NO.: 12860348
SHEET 1127 OF 1412

PAE553

DRAWFORM REVISION: 25 AUGUST 2020

Autodesk Docs://20043 MFAT 103 F35 Maintenance Hangar/20043 F35 Maint Hangar_Parking Facility.rvt
11/4/2025 1:14:14 PM

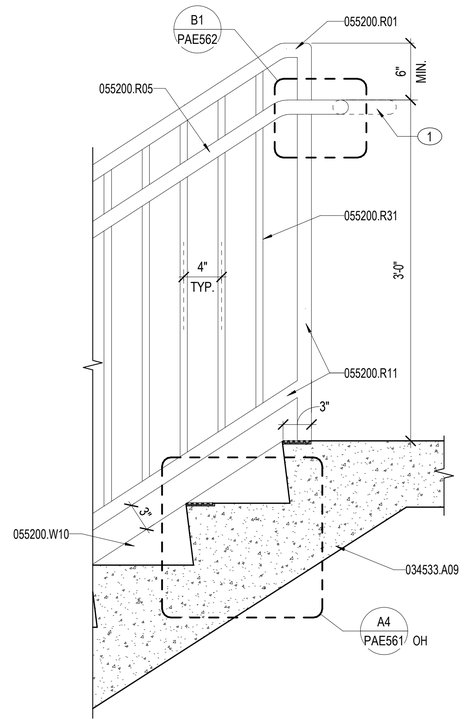

C1 TOP LANDING, TYP

1 1/2" = 1'-0" PAE421

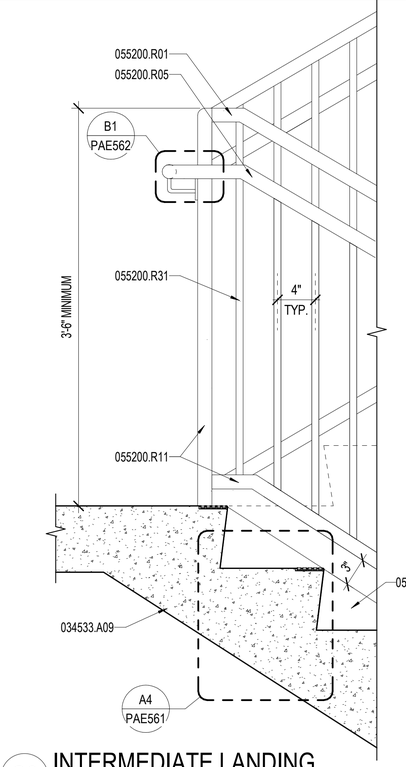

C2 INTERMEDIATE LANDING

1 1/2" = 1'-0" PAE421

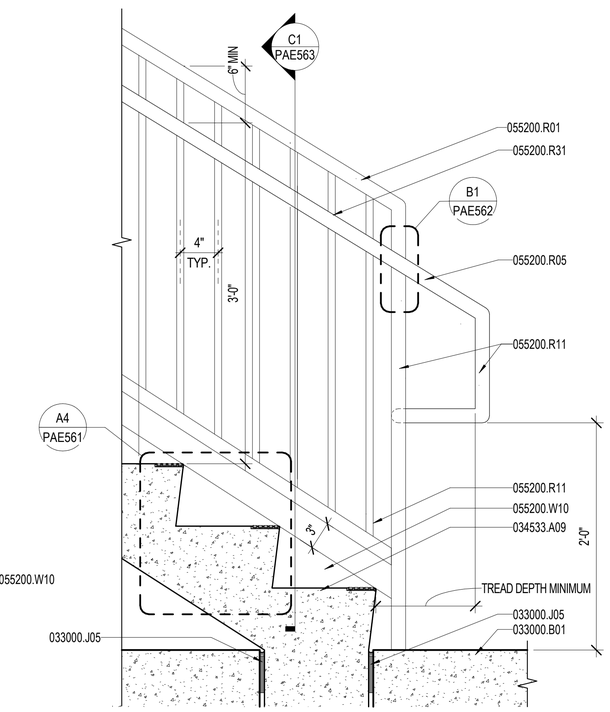

C3 BOTTOM LANDING, TYP

1 1/2" = 1'-0"

NOTES:

SHEET NOTES:

A REFER TO SHEET PAE001 FOR ARCHITECTURAL ABBREVIATIONS AND SYMBOLS.

B DESIGN OF THE STAIRS IS ASSIGNED TO A DELEGATED ENGINEER WHO IS RESPONSIBLE FOR SIZES AND THICKNESS OF STAIR COMPONENTS TO MEET THE SPECIFIED PERFORMANCE REQUIREMENTS. INFORMATION ON THIS SHEET IS PROVIDED FOR THE OVERALL DESIGN CONCEPT AND TO SHOW CERTAIN CODE REQUIRED DIMENSIONS.

C ALL VERTICAL 1/2" DIAMETER PICKETS TO BE SPACED 4" OC MAX.

D SPACE 1-1/2" OD HANDRAIL POSTS 5'-0" OC MAX.

E ALL HANDRAILS ARE 3'-0" ABOVE THE STAIR TREAD NOSING, UNO.

KEY NOTES (00)

1 4" OC MAX.

2 BOLTED CONNECTION AT EDGE OF PRECAST TO ATTACH RAILINGS, TYPICAL.

3 MAX RISER HEIGHT 7" PER CODE.

4 PRECAST CONCRETE STAIR.

5 WHERE HANDRAILS ARE SUPPORTED BY GUARDRAILS - ALL HANDRAIL TERMINATIONS WILL BE TO A VERTICAL GUARDRAIL POST.

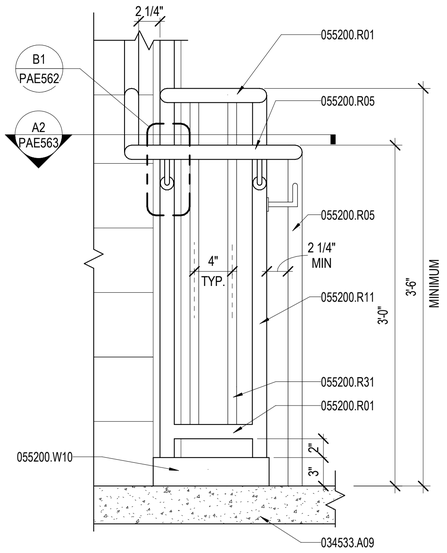

A1 INTERMEDIATE LANDING

1 1/2" = 1'-0" PAE421

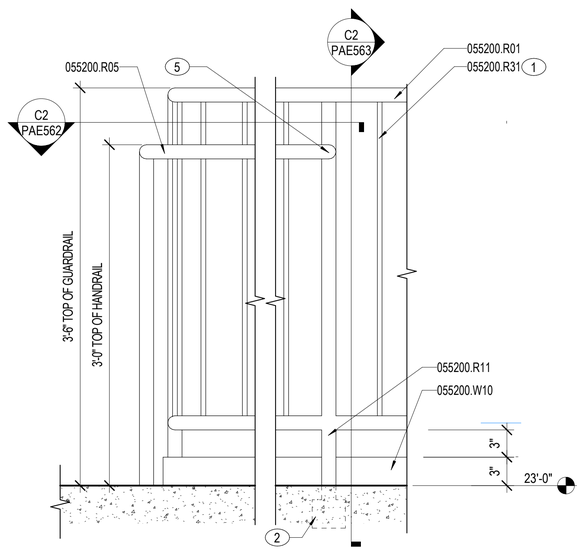

A2 TOP LANDING GUARDRAIL/HANDRAIL

1 1/2" = 1'-0" PAE421

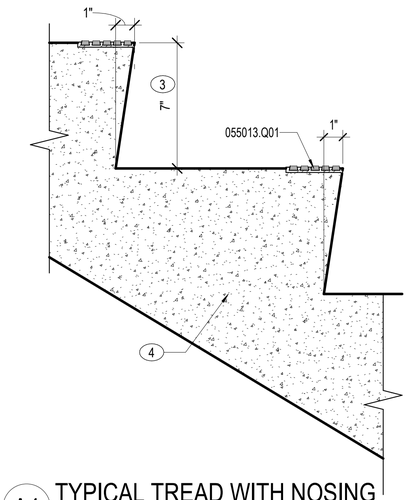

A4 TYPICAL TREAD WITH NOSING

3" = 1'-0" PAE561, PAE562

MATERIAL NOTES

033000.B01	CONCRETE SLAB
033000.J05	PREFORMED JOINT FILLER
034533.A09	PRECAST/PRESTRESSED CONCRETE STAIR
055013.Q01	ABRASIVE SAFETY NOSING
055200.R01	STEEL GUARDRAIL
055200.R05	STEEL HANDRAIL
055200.R11	STEEL PIPE 1 1/2" OD NOM
055200.R31	ROD 1/2" DIA
055200.W10	STEEL TOE PLATE

0 6" 1' 2'
1½" = 1'-0" GRAPHIC SCALE

0 1" 5" 10" 15"
3" = 1'-0" GRAPHIC SCALE

NOTE:
IF THIS DRAWING IS LESS THAN 34" X 22"
IT IS A REDUCED SIZE DRAWING

APPR	DATE	DESCRIPTION
1	05/2023	MOD P00005
2	10/2025	MOD P00006 AND P00007

NAVFAC

STATE OF FLORIDA
BILLY KEITH HOLLOWAY
AR93022
REGISTERED ARCHITECT
SEAL

BAMFORTH
AE INFO

APPROVED
FOR COMMANDER NAVFAC 11/21/2025
ACTIVITY
Approved by J. Scott Roberts,
Asset Management Branch Head &
Supervisory Facility Planner, PWD
Beaufort, SC via email.
SATISFACTORY TO DATE 12/15/2022

DES	EAD	DRW	RWR	CHK	BKH
PM/CM					KTB / RLH
BRANCH MANAGER					CGM
CHIEF ENG/ARCH					EJA
FP ENGINEER					DSN

DEPARTMENT OF THE NAVY
NAVAL FACILITIES ENGINEERING SYSTEMS COMMAND
DC CORE
MCAS BEAUFORT

NAVAL FACILITIES ENGINEERING SYSTEMS COMMAND - MID-ATLANTIC
NORFOLK, VA

BEAUFORT, SC

P-475 AIRCRAFT MAINTENANCE HANGAR -
VOLUME 4 (PARKING GARAGE OPTION)

PARKING GARAGE - STAIR DETAILS

SCALE:	As indicated
EPROJECT NO.:	1363603
CONSTR. CONTR. NO.	
NAVFAC DRAWING NO.	12860349
SHEET	1128 OF 1412

PAE561

DRAWFORM REVISION: 25 AUGUST 2020

Autodesk Docs://2042 MAX 520 730 Maintenance Hangar/2042 730 Maint Hangar_Parking Facility.rvt
11/4/2025 1:14:17 PM

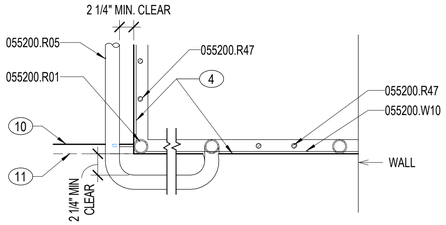

C2 HANDRAIL AND GUARDRAIL - TOP LANDING

1 1/2" = 1'-0" PAE411, PAE412, PAE413, PAE561

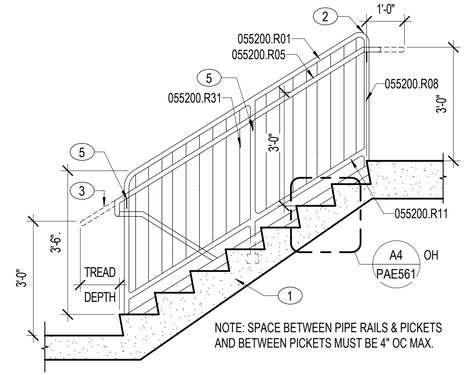

C3 INTERMEDIATE LANDING, TYP

1/2" = 1'-0" PAE421

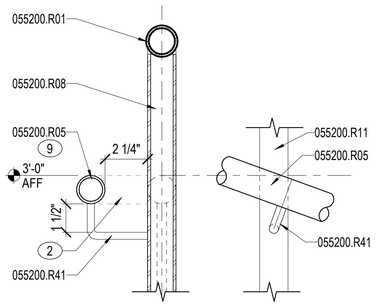

B1 GUARDRAIL MOUNTED HANDRAIL

3" = 1'-0" PAE561

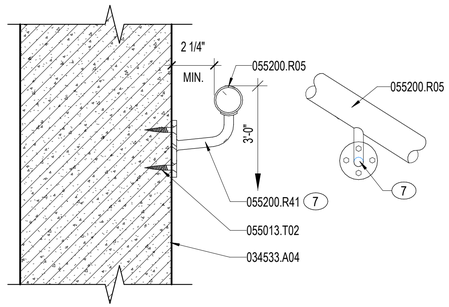

B2 WALL MOUNTED HANDRAIL

3" = 1'-0" PAE562

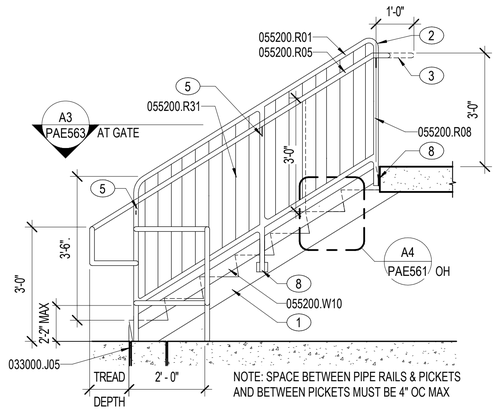

B3 BOTTOM LANDING, TYP

1/2" = 1'-0" PAE421

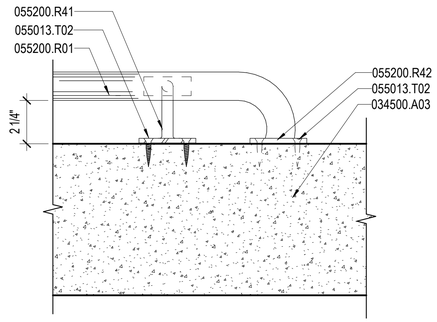

A1 STAIR WALL RAILING PLAN

3" = 1'-0"

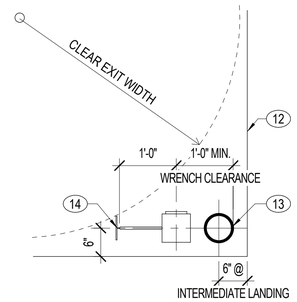

A2 TYPICAL STANDPIPE

3/4" = 1'-0"

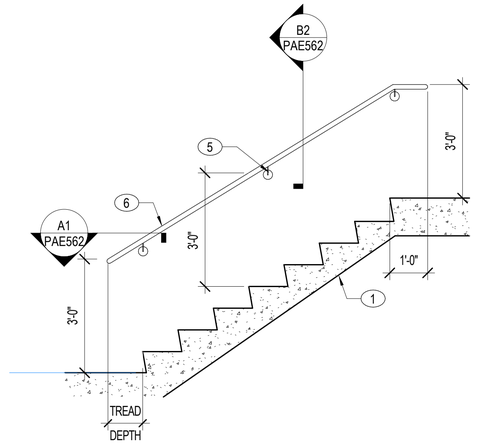

A3 HANDRAIL ELEVATION AT WALL

1/2" = 1'-0"

NOTES:

SHEET NOTES:

A REFER TO SHEET PAE001 FOR ARCHITECTURAL ABBREVIATIONS AND SYMBOLS.

B DESIGN OF THE STAIRS IS ASSIGNED TO A DELEGATED ENGINEER WHO IS RESPONSIBLE FOR SIZES AND THICKNESS OF STAIR COMPONENTS TO MEET THE SPECIFIED PERFORMANCE REQUIREMENTS. INFORMATION ON THIS SHEET IS PROVIDED FOR THE OVERALL DESIGN CONCEPT AND TO SHOW CERTAIN CODE REQUIRED DIMENSIONS.

C ALL VERTICAL 1/2" DIAMETER PICKETS TO BE SPACED 4" OC MAX.

D SPACE 1-1/2" OD HANDRAIL POSTS 5'-0" OC MAX.

E ALL HANDRAILS ARE 3'-0" ABOVE THE STAIR TREAD NOSING, UNO.

KEY NOTES (00)

1 PRECAST CONCRETE STAIR.

2 ALL RAIL INTERSECTIONS TO BE RADIUSED (TYP).

3 HANDRAIL AT WALL SIDE OF STAIR (SHOWN DASHED) SEE ELEVATION A3/PAE562 FOR INFORMATION.

4 FACE OF PRECAST BELOW.

5 LOCATE BRACKETS AT SPACING REQ'D TO SUPPORT STRUCTURAL LOAD, NOT TO EXCEED 5'-0" OC.

6 HANDRAIL AT WALL SIDE OF STAIR.

7 BRACKET SUPPORT 60" OC MAX.

8 BOLTED CONNECTION AT EDGE OF PRECAST TO ATTACH RAILINGS, TYPICAL.

9 EXTEND WRAP AROUND HANDRAIL A MINIMUM OF 12" PAST FACE OF GUARDRAIL.

10 FRONT EDGE OF STAIR TREAD BELOW.

11 LINE OF STAIR RISER.

12 INTERIOR FACE OF STAIR ENCLOSURE.

13 VERIFY DIMENSIONS AND CLEARANCE FOR STANDPIPE AND VALVE.

14 5" DIAMETER.

MATERIAL NOTES

033000.J05	PREFORMED JOINT FILLER
034500.A03	PRECAST CONCRETE WALL PANEL
034533.A04	PRECAST/PRESTRESSED CONCRETE WALL PANEL
055013.T02	ANCHOR BOLT
055200.R01	STEEL GUARDRAIL
055200.R05	STEEL HANDRAIL
055200.R08	STEEL GUARDRAIL POST
055200.R11	STEEL PIPE 1 1/2" OD NOM
055200.R31	ROD 1/2" DIA
055200.R41	BRACKET SUPPORT 60" OC MAX
055200.R42	WALL BRACKET FILLER PLATE
055200.R47	BALUSTERS
055200.W10	STEEL TOE PLATE

0 1' 2' 4' 6' 8'
1/2" = 1'-0" GRAPHIC SCALE

0 4" 1' 2' 3' 4' 5'
3/4" = 1'-0" GRAPHIC SCALE

0 6" 1' 2'
1½" = 1'-0" GRAPHIC SCALE

0 1" 5" 10" 15"
3" = 1'-0" GRAPHIC SCALE

NOTE:
IF THIS DRAWING IS LESS THAN 34" X 22"
IT IS A REDUCED SIZE DRAWING

MARK	DESCRIPTION	DATE	APPR
1	MOD P00005	05/2023	
2	MOD P00006 AND P00007	10/2025	

NAVFAC

STATE OF FLORIDA
BILLY KEITH HOLLOWAY
AR93022
REGISTERED ARCHITECT
SEAL

BAMFORTH
ENGINEERS ARCHITECTS

AE INFO

APPROVED
FOR COMMANDER NAVFAC 11/6/2025
ACTIVITY
Approved by J. Scott Roberts,
Asset Management Branch Head &
Supervisory Facility Planner, PWD
Beaufort, SC via email.

SATISFACTORY TO DATE	12/15/2022
DES EAD	DRW RWR CHK BKH
PMDM	KTB / RLH
BRANCH MANAGER	CGM
CHIEF ENG/ARCH	EJA
FP ENGINEER	DSN

DEPARTMENT OF THE NAVY
NAVAL FACILITIES ENGINEERING SYSTEMS COMMAND
DC CODE:
MCAS BEAUFORT
NAVAL FACILITIES ENGINEERING SYSTEMS COMMAND ~ MID-ATLANTIC
NORFOLK, VA
BEAUFORT, SC
P-475 AIRCRAFT MAINTENANCE HANGAR -
VOLUME 4 (PARKING GARAGE OPTION)
PARKING GARAGE - RAILING DETAILS

SCALE:	As indicated
EPROJECT NO.:	1363603
CONSTR. CONTR. NO.	
NAVFAC DRAWING NO.	12860350
SHEET	1129 OF 1412

PAE562

DRAWFORM REVISION 25 AUGUST 2020

Autodesk Docs://2024/1/NFAT 102 F35 Maintenance Hangar/20042 F35 Maint Hangar_Parking Facility.rvt
11/4/2025 1:14:19 PM

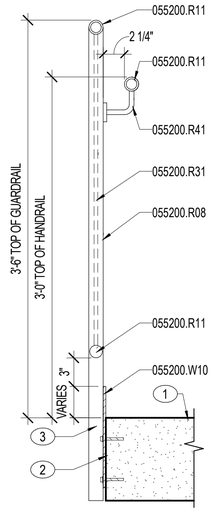

C1 GUARDRAIL WITH HANDRAIL
1 1/2" = 1'-0" PAE561

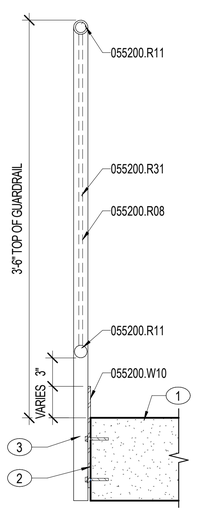

C2 GUARDRAIL SECTION
1 1/2" = 1'-0" PAE561

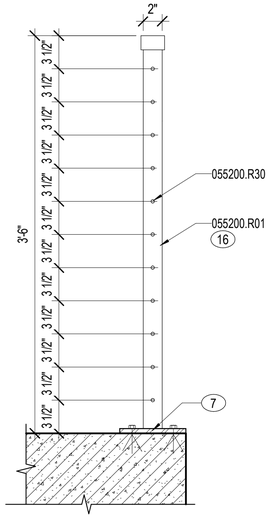

C3 CABLE GUARDRAIL
1 1/2" = 1'-0" PAE421

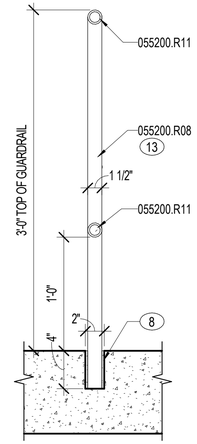

C4 STAIR GATE RAIL SECTION
1 1/2" = 1'-0" PAE563

NOTES:

SHEET NOTES:

A REFER TO SHEET PAE001 FOR ARCHITECTURAL ABBREVIATIONS AND SYMBOLS.

B DESIGN OF THE STAIRS IS ASSIGNED TO A DELEGATED ENGINEER WHO IS RESPONSIBLE FOR SIZES AND THICKNESS OF STAIR COMPONENTS TO MEET THE SPECIFIED PERFORMANCE REQUIREMENTS. INFORMATION ON THIS SHEET IS PROVIDED FOR THE OVERALL DESIGN CONCEPT AND TO SHOW CERTAIN CODE REQUIRED DIMENSIONS.

C ALL VERTICAL 1/2" DIAMETER PICKETS TO BE SPACED 4" OC MAX.

D SPACE 1-1/2" OD HANDRAIL POSTS 5'-0" OC MAX.

E ALL HANDRAILS ARE 3'-0" ABOVE THE STAIR TREAD NOSING, UNO.

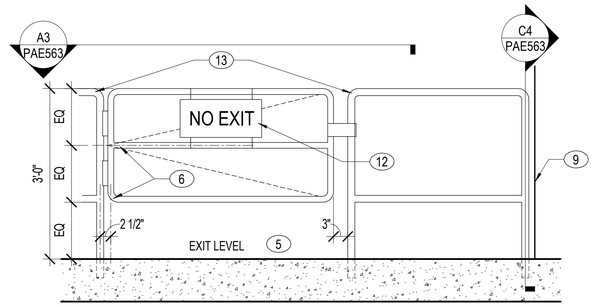

B3 TYPICAL STAIR GATE ELEVATION
3/4" = 1'-0" PAE421, PAE563

KEY NOTES (00)

1 PRECAST CONCRETE STAIR.
2 1/2" THICK STEEL PLATE.
3 1 1/2" DIA., 13 GA. STL. TUBING WELDED TO 1/2 " STL. PLATE. W/ BOLTED CONNECTION TO CONCRETE STAIR.
4 LOCATE BRACKETS AT SPACING REG'D TO SUPPORT STRUCTURAL LOAD, NOT TO EXCEED 5'-0" OC.
5 REFER TO DETAIL A3/PAE563 FOR PLAN DETAIL.
6 1 1/2" OD STEEL PIPE W/SPRING HINGES.
7 12"X12"X1/2" STEEL BASE PLATE WITH 4-3/8" DIA. EXPANSION ANCHORS WITH 2 1/2" MINIMUM EMBEDMENT
8 GROUT POST INTO CONCRETE SLAB.
9 INTERIOR FACE OF STAIR ENCLOSURE.
10 VERTICAL GATE POST AND GUARDRAIL POST.
11 CLOSURE PLATE.
12 NO EXIT SIGN.
13 GATE POSTS.
14 LINE OF RISER
15 FRONT EDGE OF TREAD BELOW
16 1 1/2" SQ. STL. TUBE W/BOLTED CONNECTION TO CONCRETE SLAB.

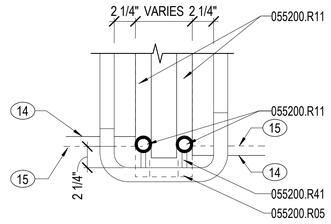

A2 HANDRAIL AND GUARDRAIL AT LANDING PLAN
1 1/2" = 1'-0" PAE411, PAE412, PAE413, PAE561

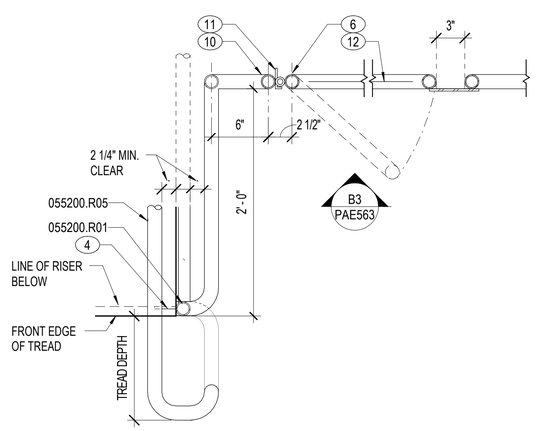

A3 HANDRAIL RETURN AND STAIR GATE PLAN
1 1/2" = 1'-0" PAE411, PAE412, PAE413, PAE561, PAE563

MATERIAL NOTES

055200.R01	STEEL GUARDRAIL
055200.R05	STEEL HANDRAIL
055200.R08	STEEL GUARDRAIL POST
055200.R11	STEEL PIPE 1 1/2" OD NOM
055200.R30	ROD 3/8" DIA
055200.R31	ROD 1/2" DIA
055200.R41	BRACKET SUPPORT 60" OC MAX
055200.W10	STEEL TOE PLATE

0 4" 1' 2' 3' 4' 5'
3/4" = 1'-0" GRAPHIC SCALE

0 2" 10" 20" 30"
1½" = 1'-0" GRAPHIC SCALE

NOTE:
IF THIS DRAWING IS LESS THAN 34" X 22"
IT IS A REDUCED SIZE DRAWING

NO	DESCRIPTION	DATE	APPR
1	MOD P00005	05/2023	
2	MOD P00006 AND P00007	10/2025	

NAVFAC

STATE OF FLORIDA
BILLY KEITH HOLLOWAY
AR93022
REGISTERED ARCHITECT
SEAL

BAMFORTH
ENGINEERING ARCHITECTURE
AE INFO

APPROVED
FOR COMMANDER NAVFAC
ACTIVITY
Approved by J. Scott Roberts,
Asset Management Branch Head &
Supervisory Facility Planner, PWD
Beaufort, SC via email.
SATISFACTORY TO DATE 12/15/2022

DES	EAD	DRW MEC	CHK BKH
PM/DM			KTB / RLH
BRANCH MANAGER			CGM
CHIEF ENG/ARCH			EJA
FP ENGINEER			DSN

DEPARTMENT OF THE NAVY
NAVAL FACILITIES ENGINEERING SYSTEMS COMMAND
DC CODE
MCAS BEAUFORT
NAVAL FACILITIES ENGINEERING SYSTEMS COMMAND – MID-ATLANTIC
NORFOLK, VA
BEAUFORT, SC
P-475 AIRCRAFT MAINTENANCE HANGAR - VOLUME 4 (PARKING GARAGE OPTION)
PARKING GARAGE - RAILING DETAILS

SCALE:	As indicated
EPROJECT NO.:	1363603
CONSTR. CONTR. NO.	
NAVFAC DRAWING NO.	12860351
SHEET	1130 OF 1412

PAE563

DRAWFORM REVISION: 29 AUGUST 2020

Autodesk Docs://20043 MFAT 500 750 Maintenance Hangar/20043 F35 Maint Hangar_Parking Facility.rvt
11/4/2025 1:14:22 PM

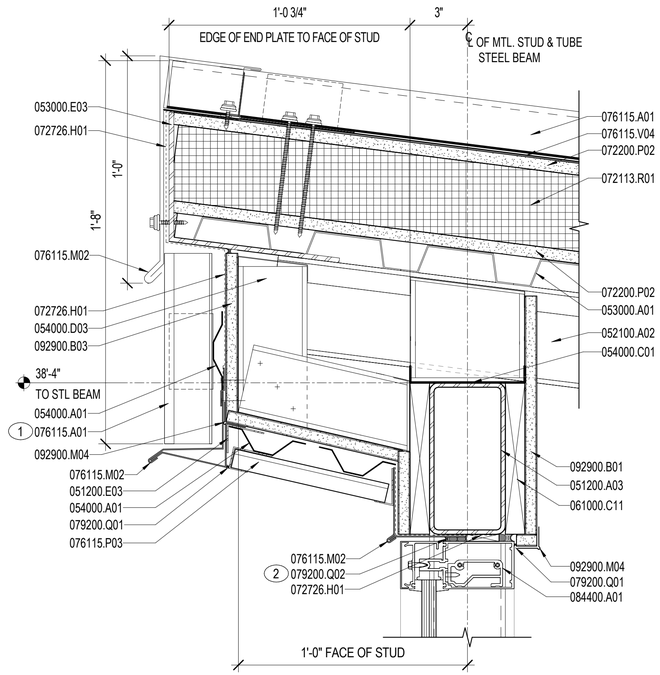

C1 SECTION DETAIL
3" = 1'-0" PAE523, PAE601

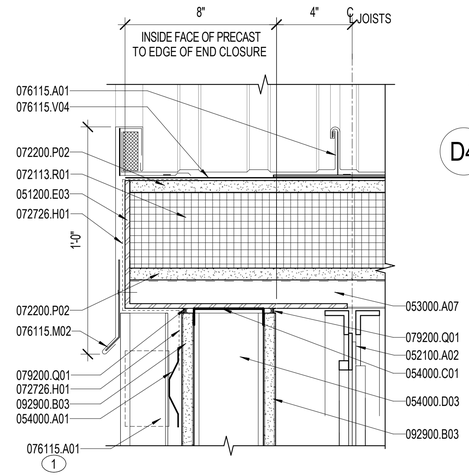

C3 SECTION DETAIL
3" = 1'-0" PAE523

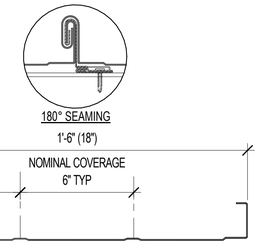

D4 ROOF PANEL PROFILE
3" = 1'-0"

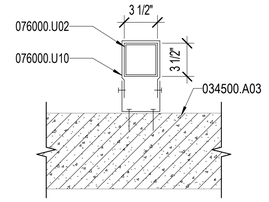

C4 DOWNSPOUT DETAIL
1 1/2" = 1'-0" PAE411, PAE412, PAE413

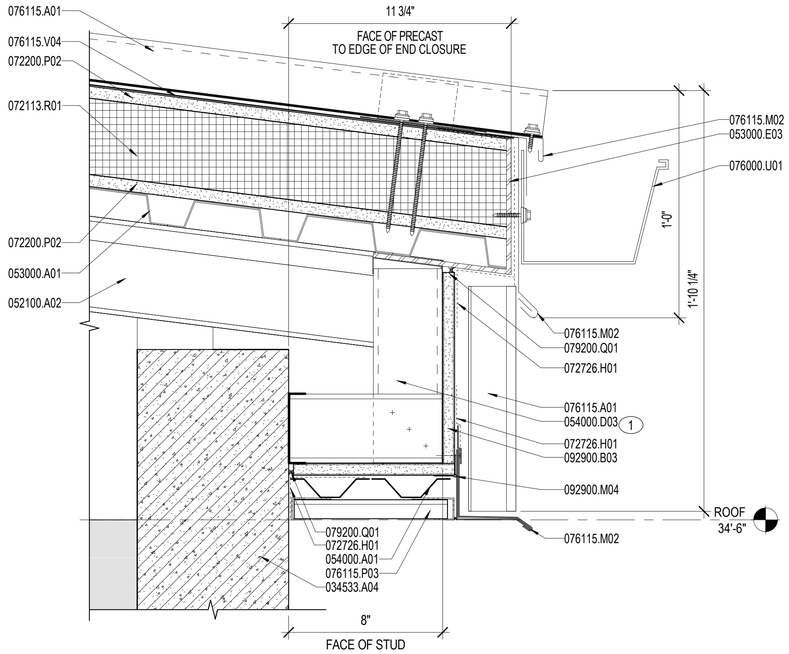

A1 LOW EAVE WITH GUTTER
3" = 1'-0" PAE523

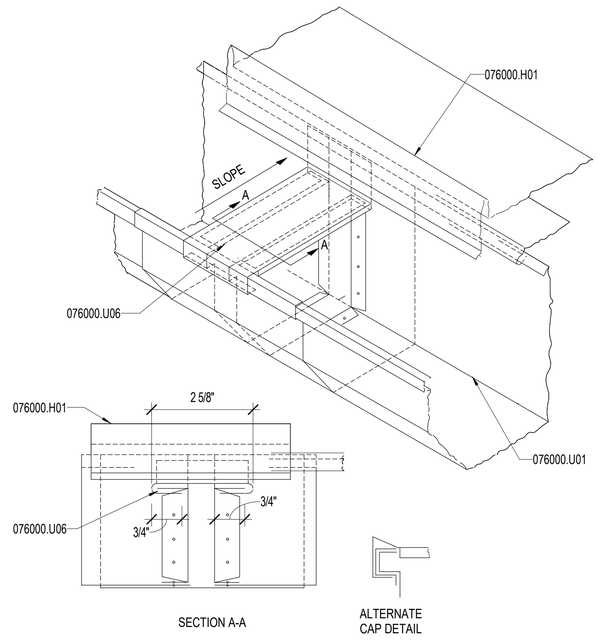

A3 GUTTER EXPANSION JOINT
6" = 1'-0"

NOTES:

SHEET NOTES:

A REFER TO SHEET PAE001 FOR ARCHITECTURAL ABBREVIATIONS AND SYMBOLS.

B FOR ALL ROOF INSULATION, PROVIDE AN R-VALUE EQUAL TO R-25 MINIMUM CONTINUOUS INSULATION. INSULATION FOR DESIGN PURPOSES IS BASED ON 1" POLYISOCYANURATE INSULATION = R-6.

C SLOPED ROOF COMPOSITION IS AN ALUMINUM STANDING SEAM METAL ROOFING PANEL ON 5/8" GLASS MAT COVER BOARD OVER AND BELOW THE 4" POLYISOCYANURATE RIGID BOARD INSULATION ON METAL DECK. REFER TO SPECIFICATION SECTION 07 61 15. REFER TO STRUCTURAL DRAWINGS FOR DECK INFORMATION.

D ARROWS INDICATE ROOF SLOPE. PROVIDE 1-1/2" PER FOOT MINIMUM SLOPE AT STANDING SEAM METAL ROOF.

E REFER TO STRUCTURAL DRAWINGS FOR TOP OF STEEL HEIGHTS.

F ARCHITECTURAL EXTERIOR DIMENSIONS ARE TO EXTERIOR FACE OF PRECAST PANEL, FACE OF METAL STUD, AND FACE OF CMU, UNO.

KEY NOTES (00)

1 STANDING SEAM METAL ROOF PANEL IN VERTICAL APPLICATION.

2 DOUBLE.

MATERIAL NOTES

034500.A03	PRECAST CONCRETE WALL PANEL
034533.A04	PRECAST/PRESTRESSED CONCRETE WALL PANEL
051200.A03	STEEL TUBE BEAM
051200.E03	STEEL PLATE, BENT
052100.A02	OPEN WEB STEEL JOIST
053000.A01	STEEL DECK
053000.A07	STEEL ROOF DECK
053000.E03	END CLOSURE
054000.A01	METAL FRAMING
054000.C01	METAL STUD RUNNER TRACK
054000.D03	METAL STUD 3 5/8"
061000.C11	PRESSURE TREATED WOOD BLOCKING
072113.R01	BOARD INSULATION
072200.P02	GLASS MAT GYPSUM PROTECTION BOARD
072726.H01	MEMBRANE FLASHING STRIP
076000.H01	METAL FLASHING
076000.U01	GUTTER
076000.U02	DOWNSPOUT
076000.U06	GUTTER EXPANSION JOINT
076000.U10	METAL DOWNSPOUT STRAP
076115.A01	STANDING-SEAM METAL ROOF PANEL
076115.M02	DRIP EDGE
076115.P03	METAL SOFFIT PANEL SYSTEM
076115.V04	HIGH TEMPERATURE RESISTANT UNDERLAYMENT
079200.Q01	JOINT SEALANT
079200.Q02	BACKSTOP AND SEALANT
084400.A01	GLAZED ALUMINUM CURTAIN WALL ASSEMBLY
092900.B01	GYPSUM BOARD, GLASS MAT FACED 5/8"
092900.B03	GLASS MAT FACED EXTERIOR GYPSUM SHEATHING 5/8"
092900.M04	CORNERBEAD

0 6" 1' 2"
1½" = 1'-0" GRAPHIC SCALE

0 2" 4" 8" 1'
3" = 1'-0" GRAPHIC SCALE

0 1" 2" 4" 6" 8"
6" = 1'-0" GRAPHIC SCALE

NOTE:
IF THIS DRAWING IS LESS THAN 34" X 22"
IT IS A REDUCED SIZE DRAWING

NO	DESCRIPTION	DATE	APPR
1	MOD P00005	05/2023	
2	MOD P00006 AND P00007	10/2025	

NAVFAC

STATE OF FLORIDA
BILLY KEITH HOLLOWAY
AR93022
REGISTERED ARCHITECT
SEAL

BAMFORTH ENGINEERS ARCHITECTS
AE INFO

APPROVED
FOR COMMANDER NAVFAC 11/26/2025

ACTIVITY: Approved by J. Scott Roberts, Asset Management Branch Head & Supervisory Facility Planner, PWD Beaufort, SC via email.

SATISFACTORY TO DATE: 12/15/2022

DES	EAD	DRW	MEC	CHK	BKH
PMDM					KTB / RLH
BRANCH MANAGER					CGM
CHIEF ENGARCH					EJA
FP ENGINEER					DSN

DEPARTMENT OF THE NAVY
NAVAL FACILITIES ENGINEERING SYSTEMS COMMAND
DC CODE:
NAVAL FACILITIES ENGINEERING SYSTEMS COMMAND ~ MID-ATLANTIC
NORFOLK, VA
MCAS BEAUFORT
BEAUFORT, SC
P-475 AIRCRAFT MAINTENANCE HANGAR - VOLUME 4 (PARKING GARAGE OPTION)
PARKING GARAGE - ROOF DETAILS - STANDING SEAM

SCALE:	As indicated
EPROJECT NO.:	1363603
CONSTR. CONTR. NO.	
NAVFAC DRAWING NO.	12860352
SHEET	1131 OF 1412

PAE581

DRAWFORM REVISION 25 AUGUST 2020

Autodesk Docs://2024 MEAT 102 F05 Maintenance Hangar-20048.735 Maint Hangar_Parking Facility.rvt
11/4/2025 1:14:25 PM

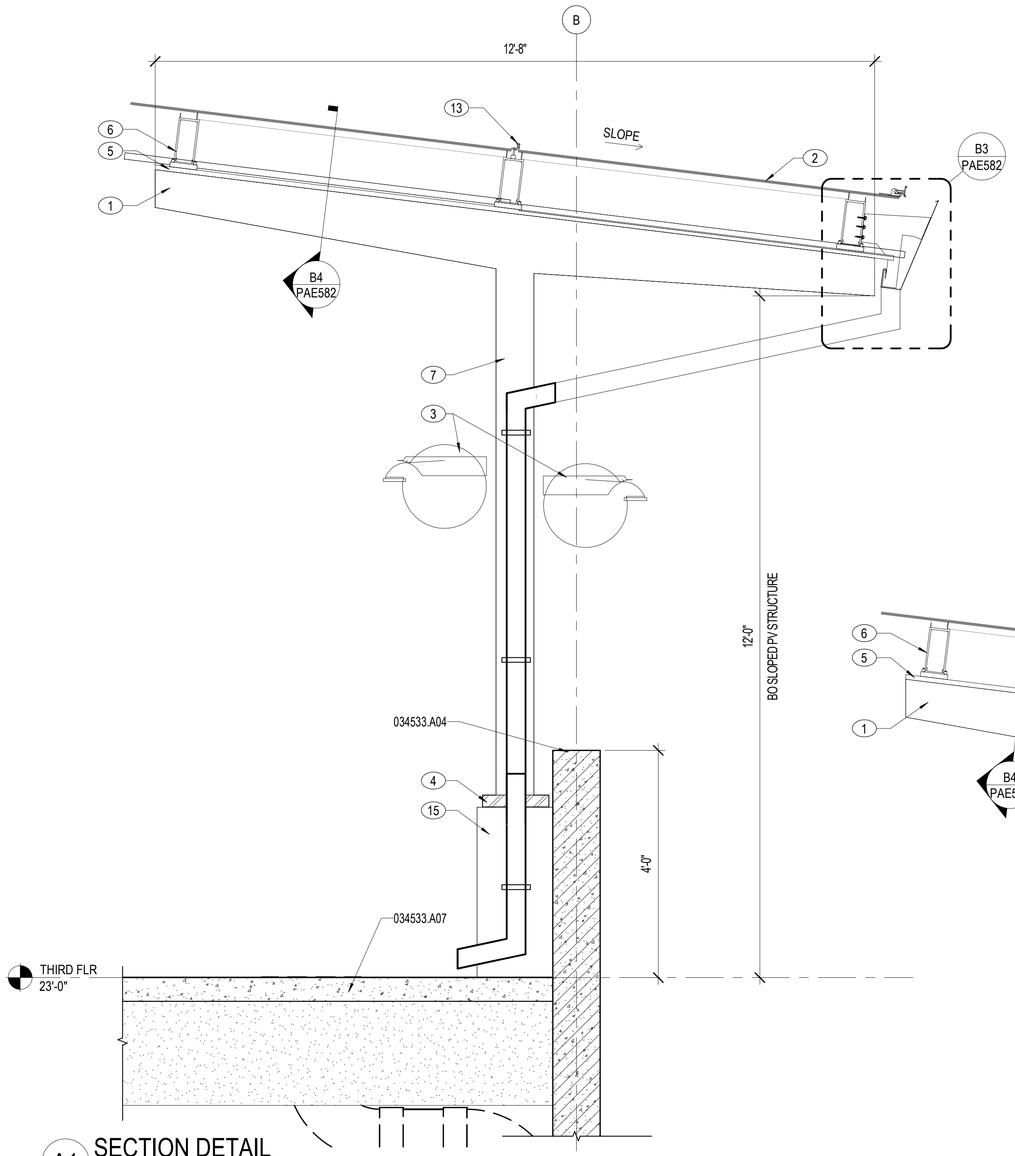

A1 SECTION DETAIL
3/4" = 1'-0"
PAE104, PAE216, PAE301, PAE312, PAE402

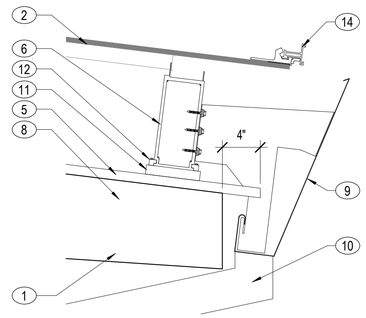

B3 SECTION DETAIL
1 1/2" = 1'-0"
PAE582

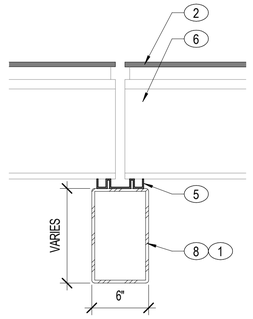

B4 SECTION DETAIL
1 1/2" = 1'-0"
PAE582

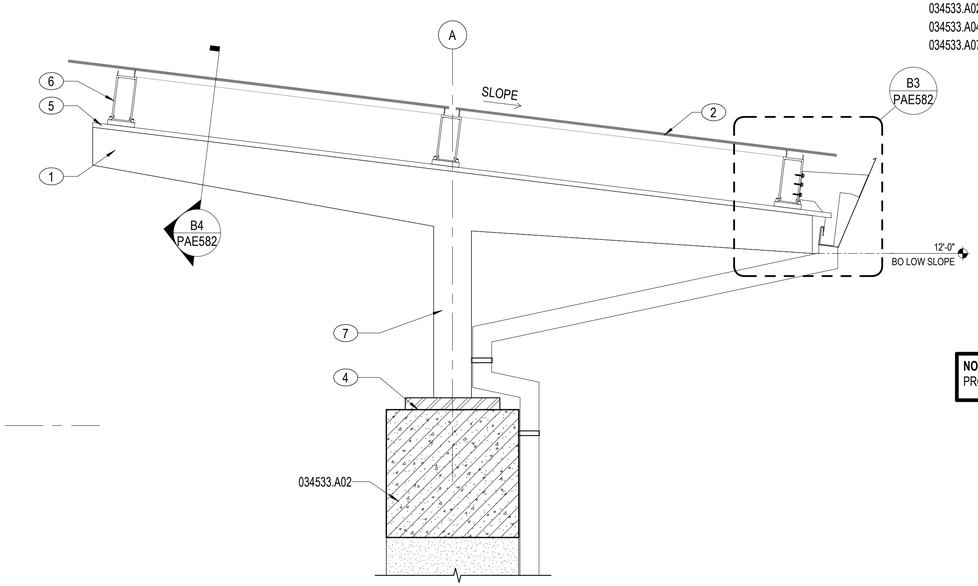

A3 SECTION DETAIL
3/4" = 1'-0"
PAE104, PAE201, PAE212, PAE214, PAE301, PAE311, PAE312, PAE402, PAE421

NOTES:

SHEET NOTES:

A REFER TO SHEET PAE001 FOR ARCHITECTURAL ABBREVIATIONS AND SYMBOLS.

B ARCHITECTURAL EXTERIOR DIMENSIONS ARE TO EXTERIOR FACE OF PRECAST PANEL, FACE OF METAL STUD, AND FACE OF CMU, UNO.

KEY NOTES (00)

1 BID OPTION. ALUMINUM CANOPY SYSTEM WITH INTEGRAL DRAINAGE FOR PHOTOVOLTAIC PANEL. PROVIDE IF PARKING GAGRAGE PV PANEL OPTION IS AWARDED. REFER TO DETAIL C3/PAE582. REFER TO STRUCTURAL DRAWINGS PSF411 - PSF412 FOR ADDITIONAL INFORMATION. REFER TO ELECTRICAL DRAWINGS PEP103A - PEP103B FOR PHOTOVOLTAIC PANEL SYSTEM INFORMATION.

2 PHOTOVOLTAIC PANEL SYSTEM. PROVIDE IF PARKING GARAGE PV PANEL OPTION IS AWARDED. REFER TO SHEET PEP103 FOR ADDITIONAL INFORMATION.

3 LIGHT FIXTURE. REFER TO SHEETS PEL101-PEL103 FOR ADDITIONAL INFORMATION.

4 ALUMINUM CANOPY SYSTEM BASE PLATE.

5 ALUMINUM CANOPY SYSTEM GIRDER GUTTER.

6 ALUMINUM CANOPY SYSTEM RAIL.

7 ALUMINUM CANOPY SYSTEM TUBE POST.

8 ALUMINUM CANOPY SYSTEM GIRDER.

9 ALUMINUM CANOPY SYSTEM CUSTOM GUTTER.

10 ALUMINUM CANOPY SYSTEM DOWNSPOUT.

11 ALUMINUM CANOPY SYSTEM SHIM WELDED TO STRUCTURE.

12 ALUMINUM CANOPY SYSTEM RAIL CLAMP.

13 PAD-STYLE SNOW GUARD, 6" WIDE, 2 PER PANEL, IMPLEMENTED BETWEEN PV PANELS IN THE HORIZONTAL JOINT UPSLOPE IN THE ARRAY.

14 FENCE-STYLE SNOW SYSTEM, 2" HIGH, INSTALLED AT THE LOWEST EDGE OF THE SOLAR ARRAY.

15 CONCRETE BASE 16"x24"x36" AT EVERY PV STRUCTURE BASE CENTER BAYS ONLY. REFER TO STRUCTURAL DRAWINGS FOR FURTHER INFORMATION.

MATERIAL NOTES

034533.A02	PRECAST/PRESTRESSED CONCRETE BEAM
034533.A04	PRECAST/PRESTRESSED CONCRETE WALL PANEL
034533.A07	PRECAST/PRESTRESSED CONCRETE FLOOR DOUBLE TEE

NOTE:
PROVIDE **ONLY** IF PARKING GARAGE PV PANELS OPTION IS **ACCEPTED**.

***BASE BID / BID OPTION NOTE:**
IF REFERENCED OPTIONS ARE NOT SELECTED, REFER TO VOLUME 6 DRAWINGS FOR BASE BID ONLY INFORMATION.

0 6" 1' 2'
1½" = 1'-0" GRAPHIC SCALE

0 4" 1' 2' 3' 4' 5'
3/4" = 1'-0" GRAPHIC SCALE

NOTE:
IF THIS DRAWING IS LESS THAN 34" X 22"
IT IS A REDUCED SIZE DRAWING

NO	DESCRIPTION	DATE	APPR
1	MOD P00005	05/2023	
2	MOD P00006 AND P00007	10/2025	

NAVFAC

STATE OF FLORIDA
BILLY KEITH HOLLOWAY
AR93022
REGISTERED ARCHITECT
SEAL

BAMFORTH ENGINEERING ARCHITECTURE
AE INFO

APPROVED
FOR COMMANDER NAVFAC
ACTIVITY
Approved by J. Scott Roberts, Asset Management Branch Head & Supervisory Facility Planner, PWD Beaufort, SC via email.
SATISFACTORY TO DATE: 12/15/2022

DES	EAD	DRW MEC	CHK BKH
PMDM			KTB / RLH
BRANCH MANAGER			CGM
CHIEF ENG/ARCH			EJA
FP ENGINEER			DSN

DEPARTMENT OF THE NAVY
NAVAL FACILITIES ENGINEERING SYSTEMS COMMAND
DC CORE
NAVAL FACILITIES ENGINEERING SYSTEMS COMMAND - MID-ATLANTIC
NORFOLK, VA
MCAS BEAUFORT
BEAUFORT, SC
P-475 AIRCRAFT MAINTENANCE HANGAR - VOLUME 4 (PARKING GARAGE OPTION)
PARKING GARAGE - ROOF PV CANOPY SYSTEM DETAILS

SCALE: As indicated
EPROJECT NO.: 1363603
CONSTR. CONTR. NO.
NAVFAC DRAWING NO.: 12860353
SHEET 1132 OF 1412

PAE582

DRAWFORM REVISION: 25 AUGUST 2020

Autodesk Docs://20021 MAF 102 735 Maintenance Hangar 20048 735 Maint Hangar_Parking Facility.rvt
11/4/2025 8:33:33 PM

D1 DOOR FRAMES
1/4" = 1'-0"

D2 DOOR PANELS
1/4" = 1'-0"

B1 CURTAIN WALL TYPES
1/4" = 1'-0"

B3 LOUVER TYPE
1/4" = 1'-0"

B4 SIGNAGE LAYOUT
1/4" = 1'-0"

DOOR SCHEDULE - PARKING GARAGE

	DOOR						FRAME				DETAILS			
DR NO		WD	WD/ SEC	HT	MAT	TYPE	MAT	TYPE	RATING (MIN)	HDWR SET	HEAD	JAMB	RMK	ROOM STC
GROUND FLR														
P103	Pr	3'-0"		7'-0"	HM	F	HM	3	--	2.12	A1/PAE601	A2/PAE601	1, 2, 3, 5	--
P104		3'-0"		7'-0"	HM	F	HM	2	--	1.17	A1/PAE601	A2/PAE601	1, 2, 3, 5	--
PS101.1		3'-0"		7'-0"	HM	N	HM	1	--	5.03	A3/PAE601	A4/PAE601	1, 2, 3, 4, 5	--
PS101.2		3'-0"		7'-0"	HM	N	HM	1	--	1.18	A3/PAE601	A4/PAE601	1, 2, 5	--
PS101.3		3'-0"		3'-0"	STL	G3	STL		--	--	--	--	6	--
PS102.1		3'-0"		7'-0"	HM	N	HM	1	--	5.03	A3/PAE601	A4/PAE601	1, 2, 3, 4, 5	--
PS102.2		3'-0"		7'-0"	HM	N	HM	1	--	1.18	A3/PAE601	A4/PAE601	1, 2, 5	--
PS102.3		3'-0"		3'-0"	STL	G3	STL		--	--	--	--	6	--
PS103.1		3'-0"		7'-0"	HM	N	HM	1	--	5.03	A3/PAE601	A4/PAE601	1, 2, 3, 4, 5	--
PS103.2		3'-0"		7'-0"	HM	N	HM	1	--	1.18	A3/PAE601	A4/PAE601	1, 2, 5	--
PS103.3		3'-0"		3'-0"	STL	G3	STL		--	--	--	--	6	--
PS104.1		3'-0"		7'-0"	HM	N	HM	1	--	1.18	A3/PAE601	A4/PAE601	1, 2, 5	--
PS104.2		3'-0"		3'-0"	STL	G3	STL		--	--	--	--	6	--
PS105	Pr	2'-6"		7'-0"	HM	F	HM	3	--	2.12	A1/PAE601	A2/PAE601	1, 2, 3, 5	--
SECOND FLR														
PS201		3'-0"		7'-0"	HM	N	HM	1	--	1.18	A3/PAE601	A4/PAE601	1, 2, 5	--
PS202		3'-0"		7'-0"	HM	N	HM	1	--	1.18	A3/PAE601	A4/PAE601	1, 2, 5	--
PS203		3'-0"		7'-0"	HM	N	HM	1	--	1.18	A3/PAE601	A4/PAE601	1, 2, 5	--
PS204		3'-0"		7'-0"	HM	N	HM	1	--	1.18	A3/PAE601	A4/PAE601	1, 2, 5	--
THIRD FLR														
PS301		3'-0"		7'-0"	HM	N	HM	1	--	1.18	A3/PAE601	A4/PAE601	1, 2, 5	--
PS302		3'-0"		7'-0"	HM	N	HM	1	--	1.18	A3/PAE601	A4/PAE601	1, 2, 5	--
PS303		3'-0"		7'-0"	HM	N	HM	1	--	1.18	A3/PAE601	A4/PAE601	1, 2, 5	--
PS304		3'-0"		7'-0"	HM	N	HM	1	--	1.18	A3/PAE601	A4/PAE601	1, 2, 5	--

ROOM FINISH SCHEDULE

ROOM NAME & NUMBER	FLOOR	WALLS	CEILING	REMARKS	PROJECT REVISION
PS10# / STAIRS	CONCS-1	PRECAST	P-3a		
P103 / SOLAR INV	CONCS-1	P-1e	EXP		
P104 / ELEC	CONCS-1	P-1e	EXP		
P105 / SPKLR	CONCS-1	P-1e	EXP		

INTERIOR ROOM SIGN SCHEDULE - A1

ROOM NUMBER	ROOM NAME	SIGN TYPE	SIGN MESSAGE	REMARKS	PROJECT REVISION
P103	SOLAR INV	A1	SOLAR INVERTER		
P104	ELEC	A1	ELECTRICAL		
P105	SPKLR	A1	SPRINKLER ROOM		

INTERIOR SIGN SCHEDULE - B2

ROOM NUMBER	ROOM NAME	SIGN TYPE	SIGN MESSAGE	REMARKS	PROJECT REVISION
PS101	STAIR 1	B2	EXIT		
PS102	STAIR 2	B2	EXIT		
PS103	STAIR 3	B2	EXIT		
PS104	STAIR 4	B2	EXIT		

NOTES:

SHEET NOTES:

A REFER TO SHEET PAE001 FOR ARCHITECTURAL ABBREVIATIONS AND SYMBOLS.
B DOOR HARDWARE SETS ARE SPECIFIED IN SPECIFICATION SECTION 08 71 00.
C PROVIDE DRIP STRIP AT ALL EXTERIOR DOORS NOT PROTECTED FROM WEATHER.
D DOOR FRAME PROFILES ARE GENERIC. REFER TO SPECIFICATIONS FOR PERFORMANCE REQUIREMENTS.
E ALUMINUM CURTAINWALL PROFILES ARE GENERIC. REFER TO SPECIFICATIONS FOR PERFORMANCE REQUIREMENTS.
F LOUVER PROFILES ARE GENERIC. REFER TO SPECIFICATIONS FOR PERFORMANCE REQUIREMENTS.
G ALL EXTERIOR DOOR GLAZING TO BE LAMINATED (088100.A08) UNO. REFER TO SPECIFICATIONS FOR GLAZING CRITERIA.
H ALL EXTERIOR GLAZING TO BE TINTED, INSULATING LAMINTED GLASS (088100.A22) UNO.
I REFER TO SPECIFICATION SECTION 08 11 00 FOR GLAZING SCHEDULES AND DESCRIPTION.
J DOOR DIMENSIONS ARE NOMINAL. FIELD VERIFY ALL DIMENSIONS AND COORDINATE ROUGH OPENING SIZES.
K REFER TO PAE100 SERIES PARKING GARAGE OVERALL FLOOR PLANS FOR ABA INTERIOR ROOM SIGN TYPE LOCATIONS.
L REFER TO VOL 2A HANGAR, AF610 FINISH IDENTIFICATION SERIES FOR ROOM FINISHES.
M REFER TO VOLUME 2A FOR SIGNAGE ELEVATIONS. SIGN FABRICATOR TO VERIFY THE MESSAGE SCHEDULE WITH THE CONTRACTING OFFICER PRIOR TO FABRICATION.

DOOR REMARKS

1 SURFACE CLOSER.
2 PERIMETER DOOR GASKETING.
3 DOOR SWEEP.
4 RAIN GUARD.
5 EXIT DEVICE.
6 GATE INSIDE STAIRWELL. REFER TO DETAILS A3/PAE563 AND B3/PAE563.

KEY NOTES (00)

1 PRECAST PANEL DRIP EDGE.
2 REFER TO C4 / PAG701 MESSAGE LAYOUT FOR GRAPHIC LAYOUT

MATERIAL NOTES

033000.G01	GROUT SOLID
033000.W01	REINFORCING STEEL
034500.A03	PRECAST CONCRETE WALL PANEL
042000.D03	CMU 8"
042000.D05	CMU BOND BEAM
042000.G10	GROUT SOLID
079200.Q01	JOINT SEALANT
081113.A01	STEEL DOOR
081113.D01	STEEL DOOR FRAME
081113.T01	MASONRY ANCHOR
084400.A01	GLAZED ALUMINUM CURTAIN WALL ASSEMBLY
088100.A04	CLEAR TEMPERED GLASS
088100.A22	INSULATING-LAMINATED GLASS UNIT
089100.A01	EXTRUDED ALUMINUM WALL LOUVER

INTERIOR SIGN SCHEDULE - A6

ROOM NUMBER	ROOM NAME	SIGN TYPE	SIGN MESSAGE 1	SYMBOL	SIGN MESSAGE 2	REMARKS	PROJECT REVISION
PS101	STAIR 1	A6	STAIR 1	STAIR ADA	EXIT		
PS101	STAIR 1	A6	STAIR 1	STAIR ADA	EXIT		
PS102	STAIR 2	A6	STAIR 2	STAIR ADA	EXIT		
PS102	STAIR 2	A6	STAIR 2	STAIR ADA	EXIT		
PS103	STAIR 3	A6	STAIR 3	STAIR ADA	EXIT		
PS103	STAIR 3	A6	STAIR 3	STAIR ADA	EXIT		
PS104	STAIR 4	A6	STAIR 4	STAIR ADA	EXIT		
PS201	STAIR 1	A6	STAIR 1	STAIR ADA	EXIT		
PS202	STAIR 2	A6	STAIR 2	STAIR ADA	EXIT		
PS203	STAIR 3	A6	STAIR 3	STAIR ADA	EXIT		
PS204	STAIR 4	A6	STAIR 4	STAIR ADA	EXIT		
PS301	STAIR 1	A6	STAIR 1	STAIR ADA	EXIT		
PS302	STAIR 2	A6	STAIR 2	STAIR ADA	EXIT		
PS303	STAIR 3	A6	STAIR 3	STAIR ADA	EXIT		
PS304	STAIR 4	A6	STAIR 4	STAIR ADA	EXIT		

A1 DOOR HEAD @ CMU
3" = 1'-0" PAE601

A2 DOOR JAMB @ CMU
3" = 1'-0" PAE601

A3 DOOR HEAD @ PRECAST
3" = 1'-0" PAE601

A4 DOOR JAMB @ PRECAST
3" = 1'-0" PAE601

0 2" 4" 8" 1'
3" = 1'-0" GRAPHIC SCALE
0 1' 5' 10' 15'
1/4" = 1'-0" GRAPHIC SCALE

NOTE:
IF THIS DRAWING IS LESS THAN 34" X 22"
IT IS A REDUCED SIZE DRAWING

SYM	DESCRIPTION	DATE	APPR
1	MOD P00005	05/2023	
2	MOD P00006 AND P00007	10/2025	

STATE OF FLORIDA
BILLY KEITH HOLLOWAY
AR93022
REGISTERED ARCHITECT
SEAL

BAMFORTH ENGINEERS + SURVEYORS
A/E INFO

APPROVED
FOR COMMANDER NAVFAC 11/21/2025
ACTIVITY
Approved by J. Scott Roberts, Asset Management Branch Head & Supervisory Facility Planner, PWD Beaufort, SC via email.
SATISFACTORY TO DATE 12/15/2022
DES EAD DRW RWR CHK BKH
PM/DM KTB / RLH
BRANCH MANAGER CGM
CHIEF ENG/ARCH EJA
FP ENGINEER DSN

DEPARTMENT OF THE NAVY
NAVAL FACILITIES ENGINEERING SYSTEMS COMMAND
NAVAL FACILITIES ENGINEERING SYSTEMS COMMAND ~ MID-ATLANTIC
NORFOLK, VA
DC CORE
MCAS BEAUFORT
BEAUFORT, SC
P-475 AIRCRAFT MAINTENANCE HANGAR - VOLUME 4 (PARKING GARAGE OPTION)
PARKING GARAGE - DOOR SCHEDULE / DOOR/DOOR FRAME, CURTAINWALL, AND LOUVER ELEVATIONS / DOOR DETAILS

SCALE: As indicated
EPROJECT NO.: 1363603
CONSTR. CONTR. NO.
NAVFAC DRAWING NO. 12860354
SHEET 1133 OF 1412
PAE601

DRAWFORM REVISION: 25 AUGUST 2020

Autodesk Docs://20042 VMFAT 502 F35 Maint Hangar/20042 F35 Maintenance Hangar_Parking Facility.rvt
11/4/2025 1:14:34 PM

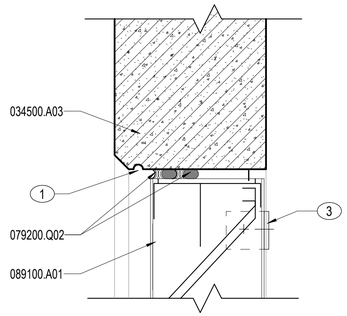

C2 LOUVER HEAD DETAIL
3" = 1'-0" PAE421, PAE601

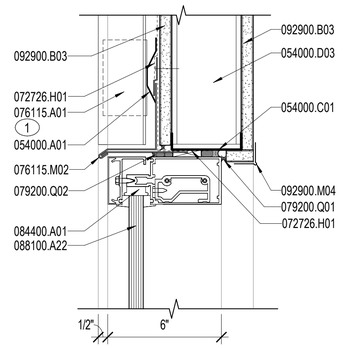

C3 HEAD DETAIL
3" = 1'-0" PAE523, PAE601

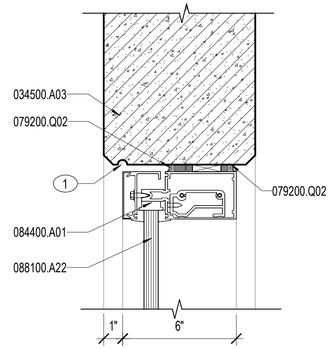

C4 HEAD DETAIL
3" = 1'-0" PAE421, PAE601

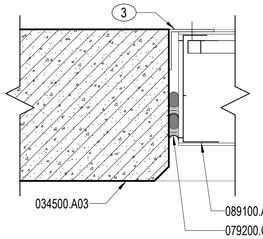

B2 LOUVER JAMB DETAIL
3" = 1'-0" PAE601

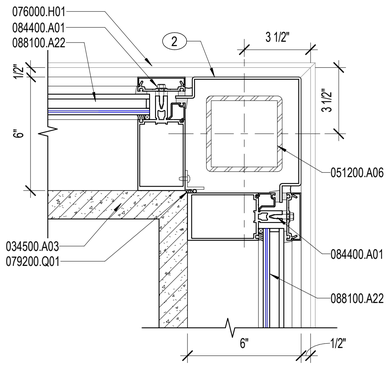

B3 CURTAINWALL CORNER MULLION
3" = 1'-0" PAE411, PAE413, PAE523, PAE601

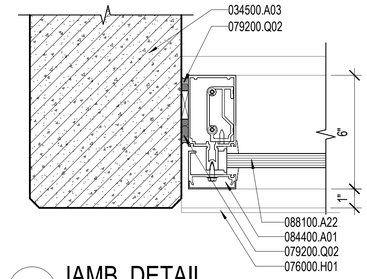

B4 JAMB DETAIL
3" = 1'-0" PAE411, PAE412, PAE601

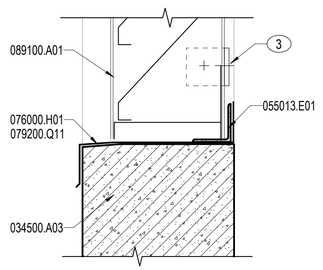

A2 LOUVER SILL DETAIL
3" = 1'-0" PAE601

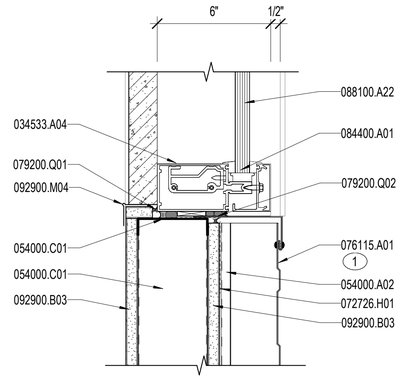

A3 CURTAINWALL JAMB MULLION
3" = 1'-0" PAE411, PAE412, PAE413

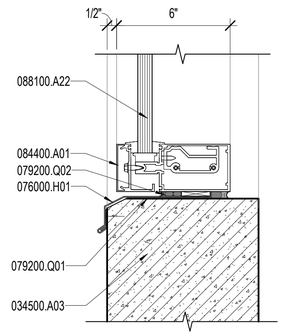

A4 SILL DETAIL
3" = 1'-0" PAE421, PAE523, PAE601

NOTES:

SHEET NOTES:

A REFER TO SHEET PAE001 FOR ARCHITECTURAL ABBREVIATIONS AND SYMBOLS.
B ALUMINUM CURTAINWALL PROFILES ARE GENERIC. REFER TO SPECIFICATIONS FOR PERFORMANCE REQUIREMENTS.
C LOUVER PROFILES ARE GENERIC. REFER TO SPECIFICATIONS FOR PERFORMANCE REQUIREMENTS.
D ALL EXTERIOR GLAZING TO BE TINTED, INSULATING LAMINTED GLASS (088100.A22) UNO.
E REFER TO SPECIFICATION SECTION 08 11 00 FOR GLAZING SCHEDULES AND DESCRIPTION.
F DIMENSIONS ARE NOMINAL. FIELD VERIFY ALL DIMENSIONS AND COORDINATE ROUGH OPENING SIZES.
G REFER TO SHEET PAE601 FOR CURTAINWALL AND LOUVER ELEVATIONS.

KEY NOTES (00)

1 STANDING SEAM METAL ROOF PANEL IN VERTICAL APPLICATION.
2 CURTAIN WALL ASSEMBLY CORNER COVER.
3 SUPPORT CLIP ANGLES BY LOUVER MANUFACTURER.

MATERIAL NOTES

034500.A03	PRECAST CONCRETE WALL PANEL
034533.A04	PRECAST/PRESTRESSED CONCRETE WALL PANEL
051200.A06	STEEL TUBE
054000.A01	METAL FRAMING
054000.A02	METAL CHANNEL
054000.C01	METAL STUD RUNNER TRACK
054000.D03	METAL STUD 3 5/8"
055013.E01	STEEL ANGLE
072726.H01	MEMBRANE FLASHING STRIP
076000.H01	METAL FLASHING
076115.A01	STANDING-SEAM METAL ROOF PANEL
076115.M02	DRIP EDGE
079200.Q01	JOINT SEALANT
079200.Q02	BACKSTOP AND SEALANT
079200.Q11	SEALANT BED
084400.A01	GLAZED ALUMINUM CURTAIN WALL ASSEMBLY
088100.A22	INSULATING-LAMINATED GLASS UNIT
089100.A01	EXTRUDED ALUMINUM WALL LOUVER
092900.B03	GLASS MAT FACED EXTERIOR GYPSUM SHEATHING 5/8"
092900.M04	CORNERBEAD

0 1" 5" 10" 15"
3" = 1'-0" GRAPHIC SCALE

NOTE:
IF THIS DRAWING IS LESS THAN 34" X 22"
IT IS A REDUCED SIZE DRAWING

APPR	DATE	DESCRIPTION
1	05/2023	MOD P00005
2	10/2025	MOD P00006 AND P00007

NAVFAC

STATE OF FLORIDA
BILLY KEITH HOLLOWAY
AR93022
REGISTERED ARCHITECT
SEAL

BAMFORTH
ENGINEERS + SURVEYORS
AE INFO

APPROVED
FOR COMMANDER NAVFAC 11/6/2025
ACTIVITY
Approved by J. Scott Roberts,
Asset Management Branch Head &
Supervisory Facility Planner, PWD
Beaufort, SC via email.

SATISFACTORY TO DATE	12/15/2022
DES EAD / DRW RWR / CHK BKH	
PMDM	KTB / RLH
BRANCH MANAGER	CGM
CHIEF ENG/ARCH	EJA
FP ENGINEER	DSN

DEPARTMENT OF THE NAVY
NAVAL FACILITIES ENGINEERING SYSTEMS COMMAND
DC CODE:
NAVAL FACILITIES ENGINEERING SYSTEMS COMMAND ~ MID-ATLANTIC
NORFOLK, VA
MCAS BEAUFORT
BEAUFORT, SC
P-475 AIRCRAFT MAINTENANCE HANGAR - VOLUME 4 (PARKING GARAGE OPTION)
PARKING GARAGE - CURTAINWALL AND LOUVER DETAILS

SCALE:	3" = 1'-0"
EPROJECT NO.:	1363603
CONSTR. CONTR. NO.	
NAVFAC DRAWING NO.	12860355
SHEET	1134 OF 1412

PAE611

DRAWFORM REVISION: 25 AUGUST 2020

Autodesk Docs://20042 MAFAT 022 F5 Maintenance Hangar/20042 F5 Maint Hangar_Parking Facility.rvt
11/4/2025 1:14:37 PM

NOTES:

SHEET NOTES:

A REFER TO SHEETS PAE001 FOR GENERAL ABBREVIATIONS AND ARCHITECTURAL SYMBOLS.

B THE 3D AXONOMETRIC VIEWS PROVIDED ARE FOR REFERENCE ONLY AND ARE NOT MEANT TO REPLACE THE INFORMATION PROVIDED IN THE CONSTRUCTION DOCUMENTS. THIS SHEET IS NOT FOR CONSTRUCTION BUT IS INCLUDED AS AN AIDE FOR VISUALIZATION TOOL.

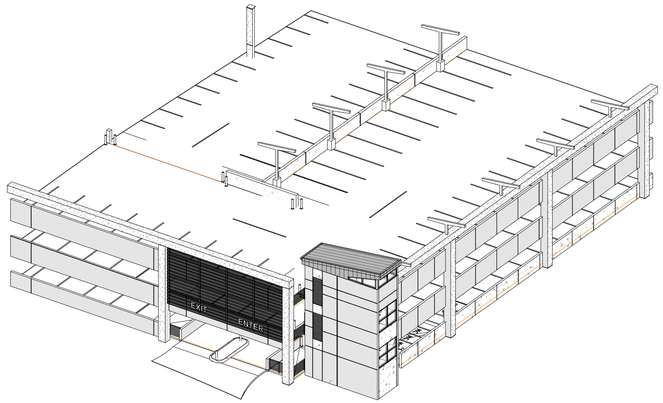

C1 AXONOMETRIC - NE VIEW

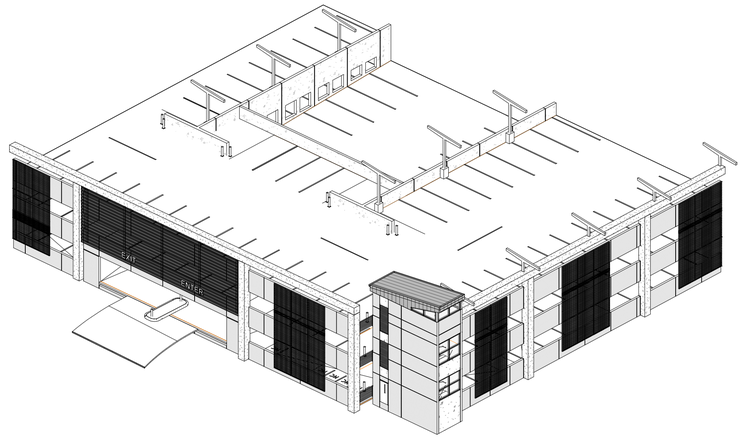

C3 AXONOMETRIC - PARTIAL SW VIEW

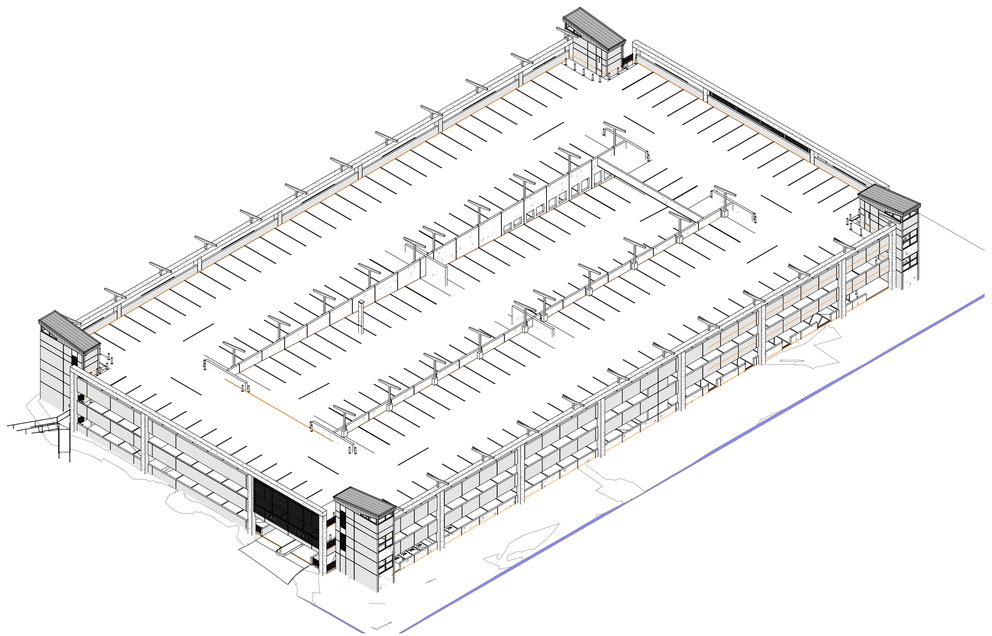

A1 AXONOMETRIC - NE VIEW

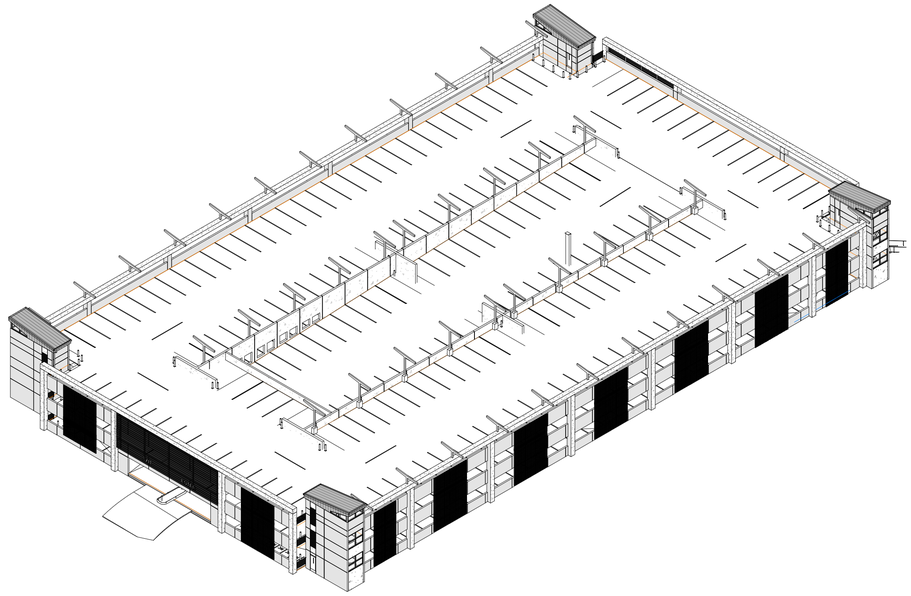

A3 AXONOMETRIC - SW VIEW

NOTE:
IF THIS DRAWING IS LESS THAN 34" X 22"
IT IS A REDUCED SIZE DRAWING

NUM	DESCRIPTION	DATE	APPR
1	MOD P00005	05/2023	
2	MOD P00006 AND P00007	10/2025	

NAVFAC

STATE OF FLORIDA
BILLY KEITH HOLLOWAY
AR93022
REGISTERED ARCHITECT
SEAL

BAMFORTH
ENGINEERING ARCHITECTURE
AE INFO

APPROVED
FOR COMMANDER NAVFAC 11/6/2025

ACTIVITY
Approved by J. Scott Roberts,
Asset Management Branch Head &
Supervisory Facility Planner, PWD
Beaufort, SC via email.

SATISFACTORY TO DATE	12/15/2022
DES EAD / DRW JUP / CHK BKH	
PMDM	KTB / RLH
BRANCH MANAGER	CGM
CHIEF ENG/ARCH	EJA
FP ENGINEER	DSN

DEPARTMENT OF THE NAVY
NAVAL FACILITIES ENGINEERING SYSTEMS COMMAND
DC CORE:
MCAS BEAUFORT

NAVAL FACILITIES ENGINEERING SYSTEMS COMMAND ~ MID-ATLANTIC
NORFOLK, VA

BEAUFORT, SC

P-475 AIRCRAFT MAINTENANCE HANGAR - VOLUME 4 (PARKING GARAGE OPTION)

PARKING GARAGE - AXONOMETRIC VIEWS

SCALE:	
EPROJECT NO.:	1363603
CONSTR. CONTR. NO.	
NAVFAC DRAWING NO.	12860356
SHEET	1135 OF 1412

PAE901

DRAWFORM REVISION: 25 AUGUST 2020

Autodesk Docs://20043 MWAT 102 F35 Maintenance Hangar/20043 F35 Maint Hangar_Parking Facility.rvt
11/4/2025 1:15:26 PM