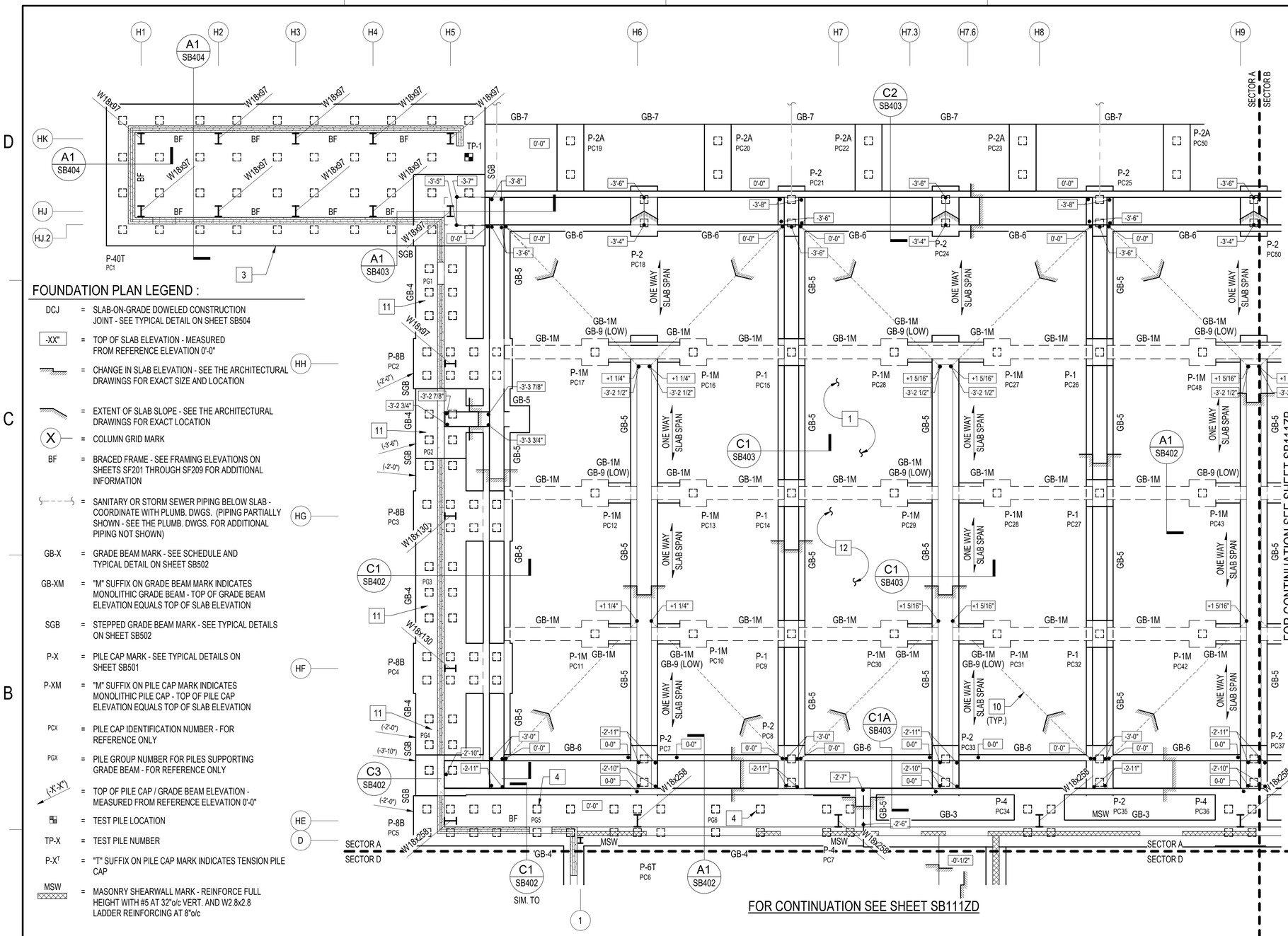

FOUNDATION PLAN LEGEND :

DCJ	=	SLAB-ON-GRADE DOWELED CONSTRUCTION JOINT - SEE TYPICAL DETAIL ON SHEET SB504
-XX"	=	TOP OF SLAB ELEVATION - MEASURED FROM REFERENCE ELEVATION 0'-0"
	=	CHANGE IN SLAB ELEVATION - SEE THE ARCHITECTURAL DRAWINGS FOR EXACT SIZE AND LOCATION
	=	EXTENT OF SLAB SLOPE - SEE THE ARCHITECTURAL DRAWINGS FOR EXACT LOCATION
X	=	COLUMN GRID MARK
BF	=	BRACED FRAME - SEE FRAMING ELEVATIONS ON SHEETS SF201 THROUGH SF209 FOR ADDITIONAL INFORMATION
	=	SANITARY OR STORM SEWER PIPING BELOW SLAB - COORDINATE WITH PLUMB. DWGS. (PIPING PARTIALLY SHOWN - SEE THE PLUMB. DWGS. FOR ADDITIONAL PIPING NOT SHOWN)
GB-X	=	GRADE BEAM MARK - SEE SCHEDULE AND TYPICAL DETAIL ON SHEET SB502
GB-XM	=	"M" SUFFIX ON GRADE BEAM MARK INDICATES MONOLITHIC GRADE BEAM - TOP OF GRADE BEAM ELEVATION EQUALS TOP OF SLAB ELEVATION
SGB	=	STEPPED GRADE BEAM MARK - SEE TYPICAL DETAILS ON SHEET SB502
P-X	=	PILE CAP MARK - SEE TYPICAL DETAILS ON SHEET SB501
P-XM	=	"M" SUFFIX ON PILE CAP MARK INDICATES MONOLITHIC PILE CAP - TOP OF PILE CAP ELEVATION EQUALS TOP OF SLAB ELEVATION
PCX	=	PILE CAP IDENTIFICATION NUMBER - FOR REFERENCE ONLY
PGX	=	PILE GROUP NUMBER FOR PILES SUPPORTING GRADE BEAM - FOR REFERENCE ONLY
(-X-X")	=	TOP OF PILE CAP / GRADE BEAM ELEVATION - MEASURED FROM REFERENCE ELEVATION 0'-0"
	=	TEST PILE LOCATION
TP-X	=	TEST PILE NUMBER
P-X^T	=	"T" SUFFIX ON PILE CAP MARK INDICATES TENSION PILE CAP
MSW	=	MASONRY SHEARWALL MARK - REINFORCE FULL HEIGHT WITH #5 AT 32"o/c VERT. AND W2.8x2.8 LADDER REINFORCING AT 8"o/c

GENERAL NOTES:

A. SEE THE CIVIL DRAWINGS FOR ACTUAL FINISHED FLOOR ELEVATION. TOP OF SLAB EQUALS FINISHED FLOOR ELEVATION AND MUST SERVE AS THE REFERENCE ELEVATION 0'-0".

B. FOR THE STRUCTURAL NOTES AND ABBREVIATIONS SEE SHEETS S-001 THROUGH S-003.

C. SEE THE DIMENSION PLANS ON SHEETS SB101A THROUGH SB101F AND THE ARCHITECTURAL DRAWINGS FOR DIMENSIONS NOT SHOWN. SEE THE ARCHITECTURAL DRAWINGS FOR LOCATIONS OF MASONRY CONTROL JOINTS AND PRECAST CONCRETE DETAILS.

E. GRADE BEAMS MUST BE CENTERED ON TOTAL WIDTH OF THE FOUNDATION WALL, UNLESS OTHERWISE NOTED.

D. COLUMNS AND COLUMN FOOTINGS MUST BE CENTERED ON GRIDS IN BOTH DIRECTIONS, UNLESS OTHERWISE NOTED OR UNLESS OTHERWISE INDICATED TO BE MONOLITHIC.

F. TOP OF ALL PILE CAPS AND GRADE BEAMS MUST BE 2'-0" BELOW REFERENCE ELEVATION 0'-0", UNLESS OTHERWISE NOTED.

G. PILE CAP AND GRADE BEAM CENTERLINES MUST COINCIDE WITH COLUMN CENTERLINES, UNLESS OTHERWISE NOTED.

X FOUNDATION PLAN KEYNOTES:

1. FIRST FLOOR AT HANGAR MUST BE A 12" THICK STRUCTURAL SLAB REINFORCED WITH #6 AT 9" ON-CENTER MAXIMUM, TOP AND BOTTOM (OUTER LAYER) AND #5 AT 12" ON-CENTER, TOP AND BOTTOM (INNER LAYER), OVER 15 MIL. VAPOR RETARDER MINIMUM (SEE SPECIFICATIONS FOR ADDITIONAL INFORMATION), OVER 4" DEPTH POROUS FILL.
2. FIRST FLOOR MUST BE A 12" THICK STRUCTURAL SLAB REINFORCED WITH #6 AT 12" ON-CENTER MAXIMUM, EACH WAY, TOP AND BOTTOM, OVER 15 MIL. VAPOR RETARDER MINIMUM (SEE SPECIFICATIONS FOR ADDITIONAL INFORMATION), OVER 4" DEPTH POROUS FILL.
3. 64" THICK CONCRETE PILE CAP WITH 40 PILES AND REINFORCED WITH #10 AT 8" ON-CENTER ADDITIONAL PILE CAP REIFORCING WITH 180° HOOKS EACH END, E ACH WAY, TOP AND BOTTOM.
4. FOUR PILES BETWEEN PILE CAPS. LOCATED AT DIMENSIONS INDICATED ON DIMENSION PLAN.
5. SUMP PIT - SEE 'TYPICAL SUMP PIT DETAIL' ON SHEET SB505 AND THE PLUMBING DRAWINGS FOR ADDITIONAL INFORMATION.
6. ELEVATOR PIT - SEE TYPICAL DETAIL ON SHEET SB505.
7. CONCRETE CURB AT SHOWERS - SEE DETAIL ON SHEET SB505.
8. CONDUCT STATIC LOAD TEST ON PILE IN ADDITION TO PDA TESTING.
9. PRECAST MANUFACTURER MUST PROVIDE PANEL BOXOUTS AT THE BOTTOM OF THE PANEL TO ALLOW SPACE FOR BASE PLATES AND ANCHOR RODS IN ADDITON CONNECTITONS TO FOUNDATION BELOW MUST BE PROVIDED SO THEY DO NOT INTERFERE WITH COLUMN BASE PLATES AND ANCHOR RODS.FOR BASE PLATE AND ANCHOR ROD DETAILS SEE SHEETS SB504 AND SF701.
10. REGION OF SLAB SURFACE WARP AND DIRECTION FROM HIGH POINT TO LOW POINT. MAINTAIN SPECIFIED SLAB THICKNESS THROUGHOUT WARP REGION.
11. SIX PILES BETWEEN PILE CAPS. LOCATE AT DIMENSIONS INDICATED ON DIMENSION PLAN.
12. SLAB REINFORCEMENT AND BOTTOM OF SLAB MAY BE HORIZONTAL TO EARTH AND VARY THE TOP REINFORCEMENT CLEARANCE TO MAINTAIN SLOPE.

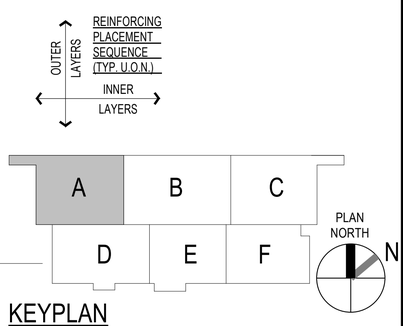

KEYPLAN

0 5' 10' 20' 30'
1/8" = 1'-0" GRAPHIC SCALE

NOTE:
IF THIS DRAWING IS LESS THAN 34" X 22"
IT IS A REDUCED SIZE DRAWING

ALL COLUMNS INDICATED ON THIS PLAN ARE PART OF SFRS.

SPEIGHT-MARSHALL-FRANCIS
STRUCTURAL ENGINEERS
1228 PERIMETER PARKWAY, SUITE 201
VIRGINIA BEACH, VIRGINIA 23454
P: 757.427.1020
7814 CAROUSEL LANE SUITE 200
RICHMOND, VIRGINIA 23294
P: 804.464.4111
SMF Job No: 20.009-B
WWW.SMANDF.CO

A1 FOUNDATION - BID OPTION - Sector A

1/8" = 1'-0"

STM	DESCRIPTION	DATE	APPR
	MOD P00006 AND MOD P00007	10/2025	
	MOD P00005	05/2023	

NAVFAC

COMMONWEALTH OF VIRGINIA
EARL H. INGE, JR.
Lic. No. 035522
1/13/2023
PROFESSIONAL ENGINEER

BAMFORTH ENGINEERS + SURVEYORS

AE INFO

APPROVED
FOR COMMANDER NAVFAC 11/21/2022

ACTIVITY
Approved by J. Scott Roberts, Asset Management Branch Head & Supervisory Facility Planner, PWD Beaufort, SC via email.

SATISFACTORY TO DATE			12/15/2022
DES EHI	DRW NAA	CHK DWS	
PMDM			KTB / RLH
BRANCH MANAGER			NEK
CHIEF ENG/ARCH			EJA
FP ENGINEER			DSN

DEPARTMENT OF THE NAVY
NAVAL FACILITIES ENGINEERING SYSTEMS COMMAND
DC CORE

NAVAL FACILITIES ENGINEERING SYSTEMS COMMAND – MID-ATLANTIC NORFOLK, VA

MCAS BEAUFORT BEAUFORT, SC

P-475 AIRCRAFT MAINTENANCE HANGAR - VOLUME 6
SITE BASED BID AND ADDITIONAL OPTIONS

HANGAR - FOUNDATION PLAN - SECTOR A

SCALE:	As indicated
EPROJECT NO.:	1363603
CONSTR. CONTR. NO.	
NAVFAC DRAWING NO.	12871458
SHEET	1363 OF 1412

SB111ZA

DRAWFORM REVISION: 25 AUGUST 2020

Autodesk Docs://0042 VMFAT 100 F35 Maintenance Hangar/BLDG F475 1363603-S-r4
11/11/2025 6:53:41 PM

CUI

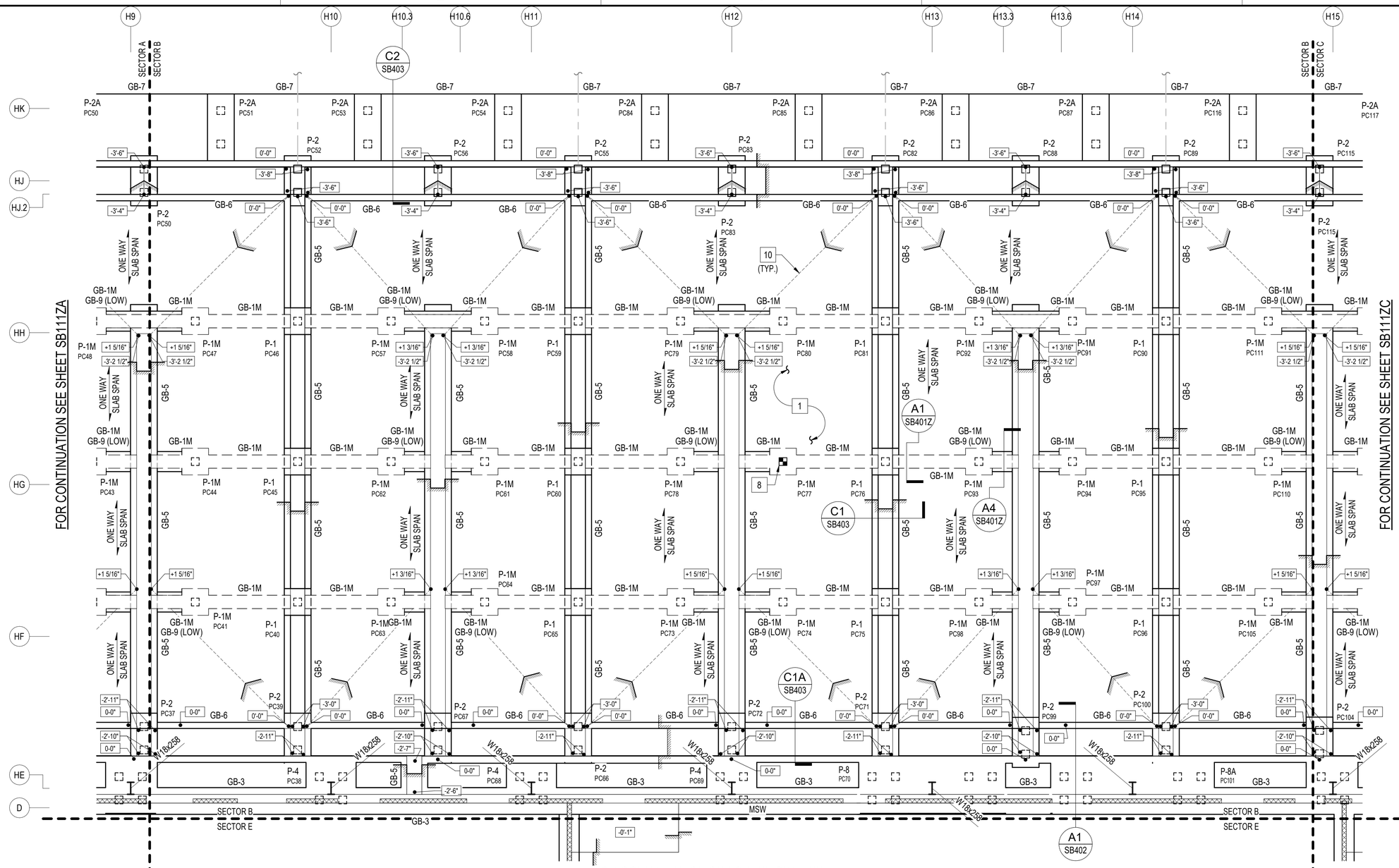

A1 FOUNDATION - BID OPTION - Sector B

1/8" = 1'-0"

(FOR PLAN NOTES AND LEGEND SEE SHEET SB111A)

REINFORCING PLACEMENT SEQUENCE (TYP. U.O.N.)

OUTER LAYERS

INNER LAYERS

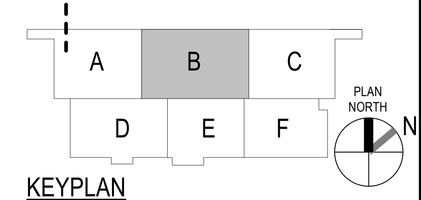

KEYPLAN

0 5' 10' 20' 30'

1/8" = 1'-0" GRAPHIC SCALE

ALL COLUMNS INDICATED ON THIS PLAN ARE PART OF SFRS.

SPEIGHT·MARSHALL·FRANCIS
STRUCTURAL ENGINEERS
1228 PERIMETER PARKWAY, SUITE 201
VIRGINIA BEACH, VIRGINIA 23454
P: 757.427.1020
7814 CAROUSEL LANE SUITE 200
RICHMOND, VIRGINIA 23294
P: 804.464.4111
SMF Job No. 20.009-B
WWW.SMANDF.CO

NOTE:
IF THIS DRAWING IS LESS THAN 34" X 22"
IT IS A REDUCED SIZE DRAWING

STM	DESCRIPTION	DATE	APPR
	MOD P00006 AND MOD P00007	10/2025	
	MOD P00005	05/2023	

NAVFAC

COMMONWEALTH OF VIRGINIA
EARL H. INGE, JR.
Lic. No. 035522
1/13/2023
PROFESSIONAL ENGINEER

BAMFORTH ENGINEERS + SURVEYORS

AE INFO

APPROVED

FOR COMMANDER NAVFAC 11/21/2025

ACTIVITY: Approved by J. Scott Roberts, Asset Management Branch Head & Supervisory Facility Planner, PWD Beaufort, SC via email.

SATISFACTORY TO DATE	12/15/2022
DES EHI / DRW NAA / CHK DWS	
PMDM	KTB / RLH
BRANCH MANAGER	NEK
CHIEF ENG/ARCH	EJA
FP ENGINEER	DSN

DEPARTMENT OF THE NAVY
NAVAL FACILITIES ENGINEERING SYSTEMS COMMAND
DC CORE
NAVAL FACILITIES ENGINEERING SYSTEMS COMMAND – MID-ATLANTIC NORFOLK, VA
MCAS BEAUFORT BEAUFORT, SC

P-475 AIRCRAFT MAINTENANCE HANGAR - VOLUME 6
SITE BASED BID AND ADDITIONAL OPTIONS

HANGAR - FOUNDATION PLAN - SECTOR B

SCALE:	As indicated
EPROJECT NO.:	1363603
CONSTR. CONTR. NO.	
NAVFAC DRAWING NO.	12871459
SHEET	1364 OF 1412

SB111ZB

DRAWFORM REVISION: 25 AUGUST 2020

Autodesk Docs://2042 VMFA1 F35 Maintenance Hangar/BLDG P475 1363603-S.rvt
11/11/2025 6:57:44 PM

CUI

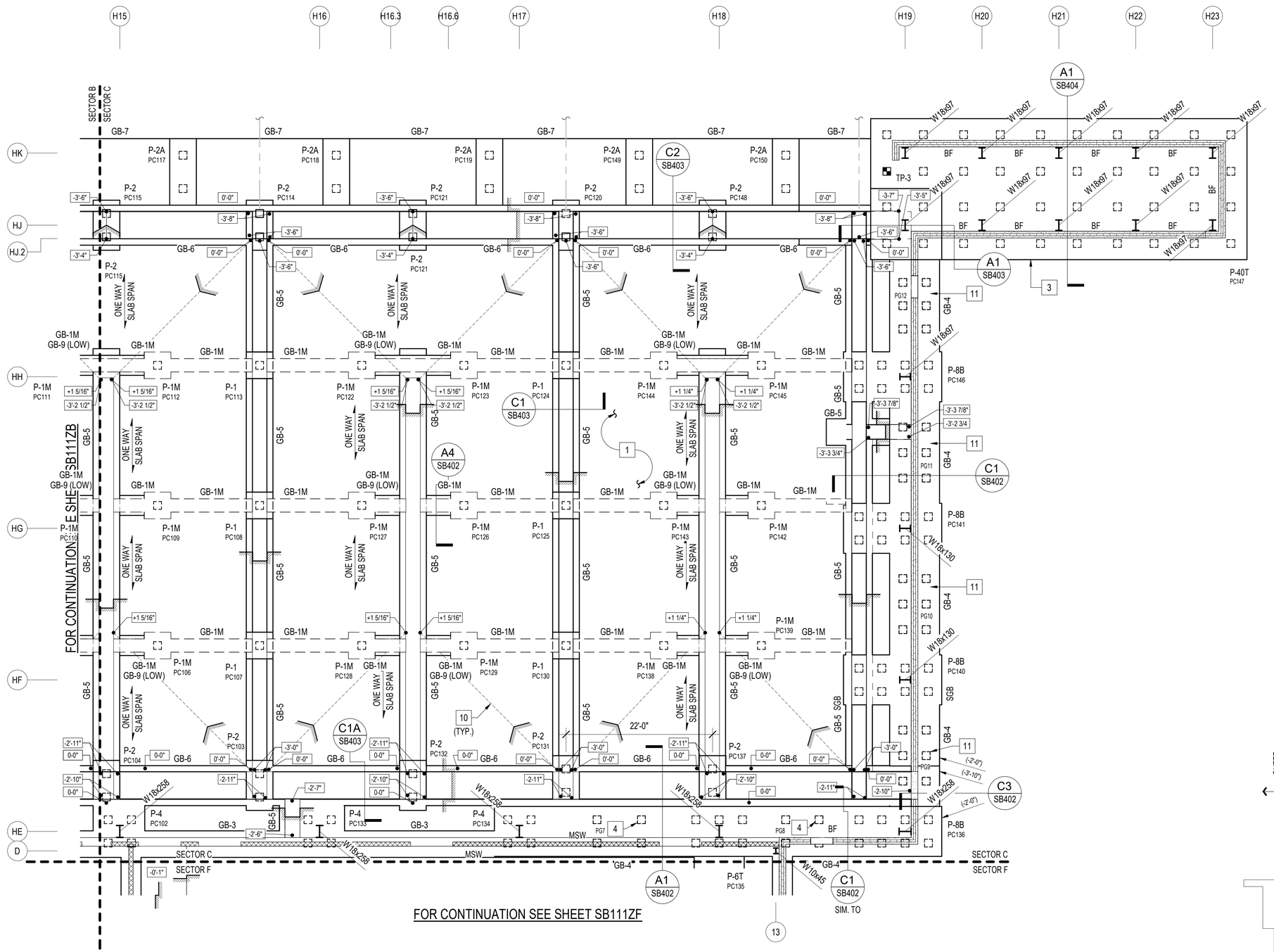

A1 FOUNDATION - BID OPTION - Sector C

1/8" = 1'-0"

(FOR PLAN NOTES AND LEGEND SEE SHEET SB111A)

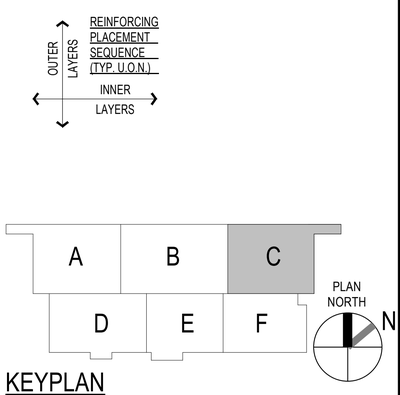

KEYPLAN

0 5' 10' 20' 30'

1/8" = 1'-0" GRAPHIC SCALE

ALL COLUMNS INDICATED ON THIS PLAN ARE PART OF SFRS.

SPEIGHT-MARSHALL-FRANCIS STRUCTURAL ENGINEERS
1228 PERIMETER PARKWAY, SUITE 201
VIRGINIA BEACH, VIRGINIA 23454
P: 757.427.1020
7914 CAROUSEL LANE SUITE 200
RICHMOND, VIRGINIA 23294
P: 804.464.4111
WWW.SMANDF.CO
SMAF Job No: 20.009-B

NOTE:
IF THIS DRAWING IS LESS THAN 34" X 22"
IT IS A REDUCED SIZE DRAWING

STM	DESCRIPTION	DATE	APPR
	MOD P00006 AND MOD P00007	10/2025	
	MOD P00005	05/2023	

NAVFAC

COMMONWEALTH OF VIRGINIA
EARL H. INGE, JR.
Lic. No. 035522
1/13/2023
PROFESSIONAL ENGINEER

BAMFORTH ENGINEERS + SURVEYORS

AE INFO

APPROVED
FOR COMMANDER NAVFAC 11/21/2025

ACTIVITY
Approved by J. Scott Roberts
Asset Management Branch Head &
Supervisory Facility Planner, PWD
Beaufort, SC via email.

SATISFACTORY TO DATE 12/15/2022

DES	EHI	DRW NAA	CHK DWS
PMDM	KTB / RLH		
BRANCH MANAGER	NEK		
CHIEF ENG/ARCH	EJA		
FP ENGINEER	DSN		

NAVAL FACILITIES ENGINEERING SYSTEMS COMMAND
NAVAL FACILITIES ENGINEERING SYSTEMS COMMAND ~ MID-ATLANTIC
NORFOLK, VA

DEPARTMENT OF THE NAVY
DC CORE

MCAS BEAUFORT
BEAUFORT, SC

P-475 AIRCRAFT MAINTENANCE HANGAR - VOLUME 6
SITE BASED BID AND ADDITIONAL OPTIONS

HANGAR - FOUNDATION PLAN - SECTOR C

SCALE: As indicated
EPROJECT NO.: 1363603
CONSTR. CONTR. NO.
NAVFAC DRAWING NO. 12871460
SHEET 1365 OF 1412

SB111ZC

DRAWFORM REVISION: 20 AUGUST 2020

Autodesk Docs://2042 \ MFAT 502 F35 Maintenance Hangar/BLDG F475 13630S S.rvt
11/11/2025 6:57:47 PM

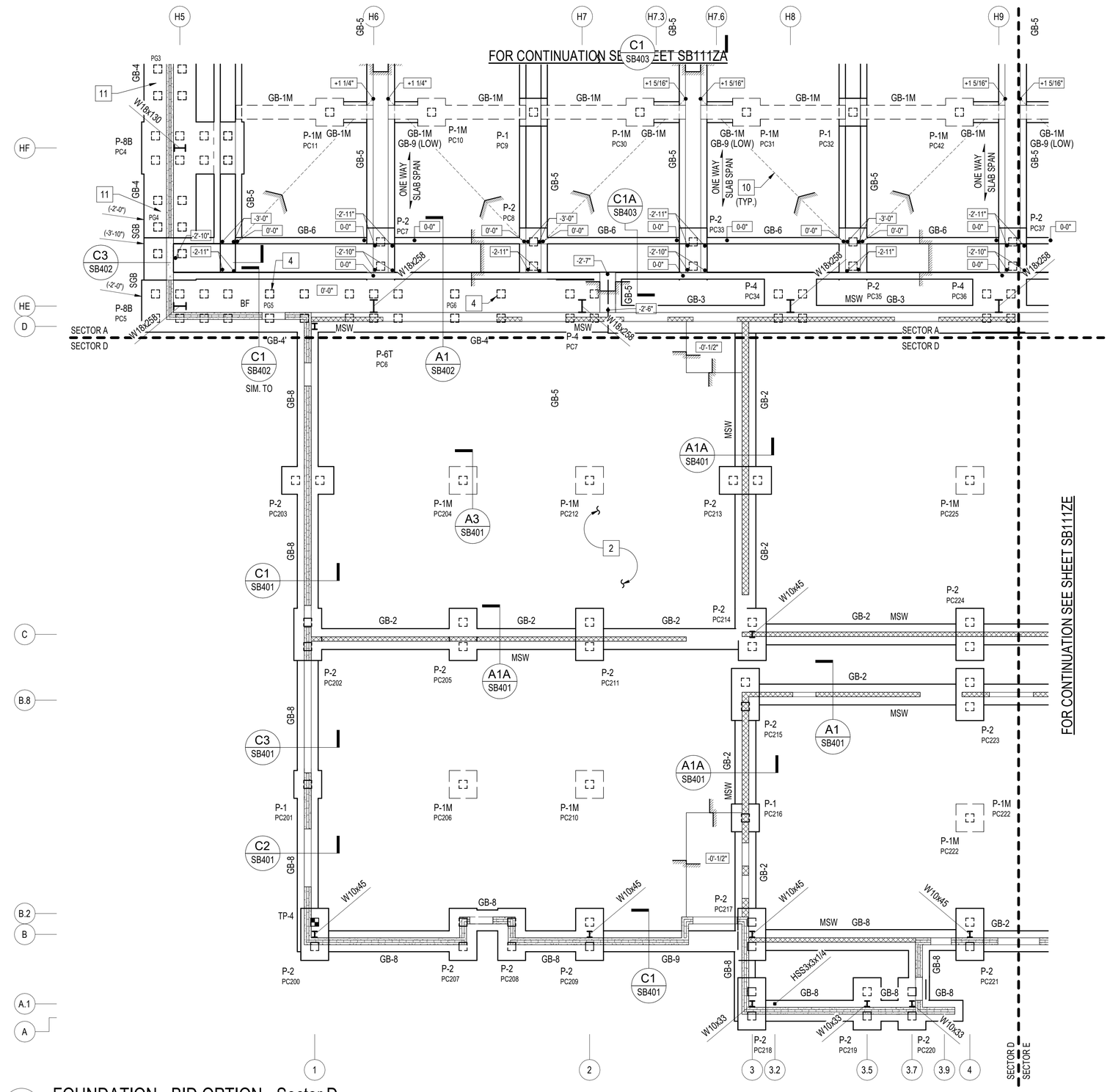

A1 FOUNDATION - BID OPTION - Sector D

1/8" = 1'-0" (FOR PLAN NOTES AND LEGEND SEE SHEET SB111A)

KEYPLAN

0 5' 10' 20' 30'

1/8" = 1'-0" GRAPHIC SCALE

NOTE:
IF THIS DRAWING IS LESS THAN 34" X 22"
IT IS A REDUCED SIZE DRAWING

SPEIGHT·MARSHALL·FRANCIS
STRUCTURAL ENGINEERS
1228 PERIMETER PARKWAY, SUITE 201
VIRGINIA BEACH, VIRGINIA 23454
P: 757.427.1020
7814 CAROUSEL LANE SUITE 200
RICHMOND, VIRGINIA 23294
P: 804.464.4111
SMF Job No: 20.009-B
WWW.SMANDF.CO

STM	DESCRIPTION	DATE	APPR
	MOD P00006 AND MOD P00007	10/2025	
	MOD P00005	05/2023	

NAVFAC

COMMONWEALTH OF VIRGINIA
EARL H. INGE, JR.
Lic. No. 035522
1/13/2023
PROFESSIONAL ENGINEER

BAMFORTH
ENGINEERS + SURVEYORS

AE INFO

APPROVED
FOR COMMANDER NAVFAC 11/21/2025

ACTIVITY: Approved by J. Scott Roberts, Asset Management Branch Head & Supervisory Facility Planner, PWD Beaufort, SC via email.

SATISFACTORY TO DATE 12/15/2022

DES	EHI	DRW	NAA	CHK	DWS
PM/DM	KTB / RLH				
BRANCH MANAGER	NEK				
CHIEF ENG/ARCH	EJA				
FP ENGINEER	DSN				

DEPARTMENT OF THE NAVY
NAVAL FACILITIES ENGINEERING SYSTEMS COMMAND
DC CORE
NAVAL FACILITIES ENGINEERING SYSTEMS COMMAND – MID-ATLANTIC
NORFOLK, VA
MCAS BEAUFORT
BEAUFORT, SC
P-475 AIRCRAFT MAINTENANCE HANGAR - VOLUME 6
SITE BASED BID AND ADDITIONAL OPTIONS
HANGAR - FOUNDATION PLAN - SECTOR D

SCALE: As indicated
EPROJECT NO.: 1363603
CONSTR. CONTR. NO.
NAVFAC DRAWING NO. 12871461
SHEET 1366 OF 1412

SB111ZD

DRAWFORM REVISION: 25 AUGUST 2020

Autodesk Docs://20042 MFA1 920 735 Maintenance Hangar/BLDG P475 1363603.5.rvt
11/11/2025 5:57:49 PM

CUI

1 2 3 4 5

D C B A

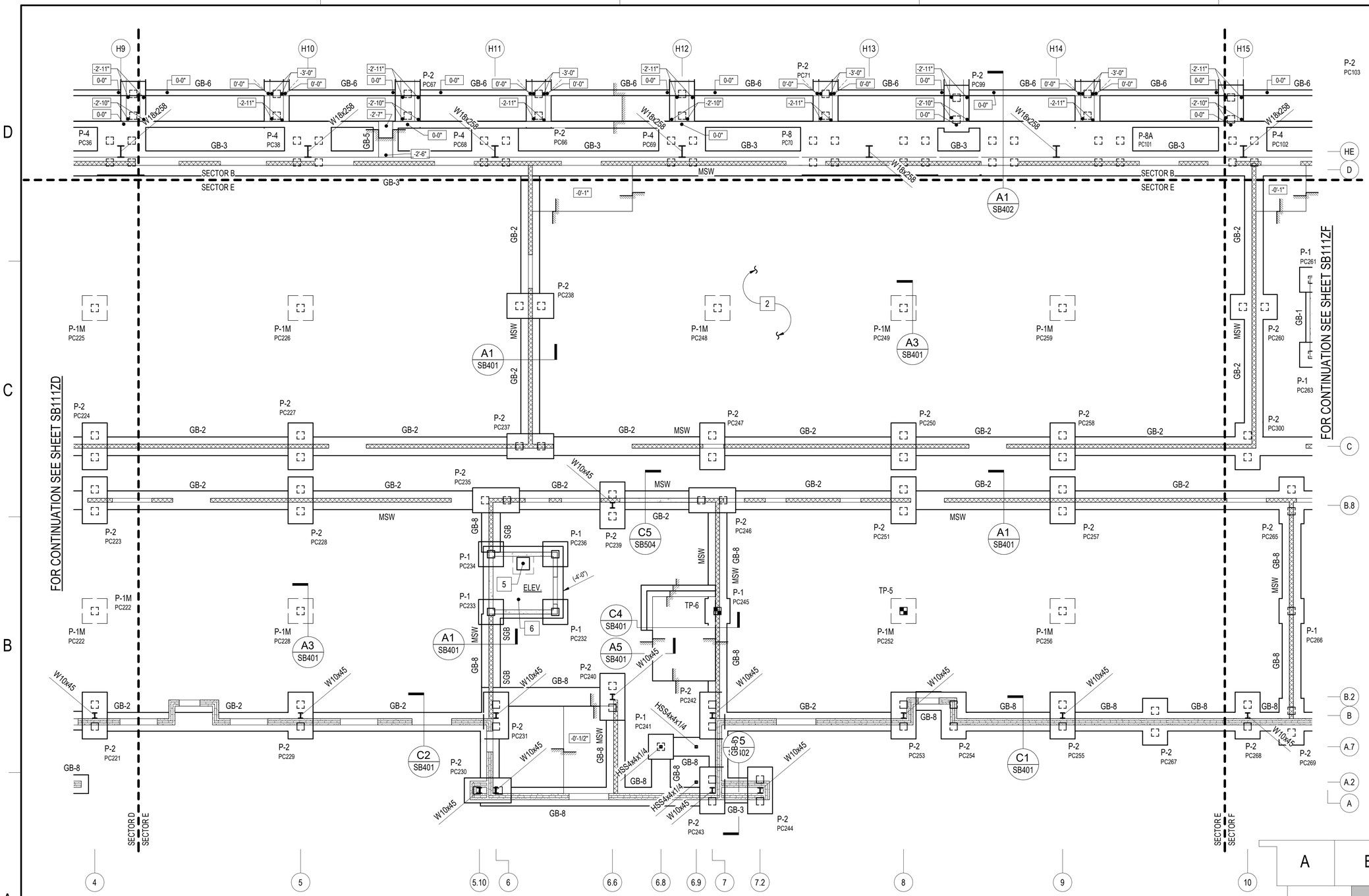

A1 FOUNDATION - BID OPTION - Sector E

1/8" = 1'-0" (FOR PLAN NOTES AND LEGEND SEE SHEET SB111A)

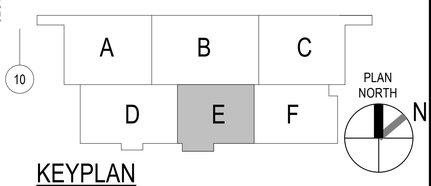

KEYPLAN

0 5' 10' 20' 30'

1/8" = 1'-0" GRAPHIC SCALE

SPEIGHT·MARSHALL·FRANCIS STRUCTURAL ENGINEERS
1228 PERIMETER PARKWAY, SUITE 201
VIRGINIA BEACH, VIRGINIA 23454
P: 757.427.1020
7814 CAROUSEL LANE SUITE 200
RICHMOND, VIRGINIA 23294
P: 804.464.4111
SMF Job No: 20.009-B
WWW.SMANDF.CO

NOTE:
IF THIS DRAWING IS LESS THAN 34" X 22"
IT IS A REDUCED SIZE DRAWING

STM	DESCRIPTION	DATE	APPR
	MOD P00006 AND MOD P00007	10/2025	
	MOD P00005	05/2023	

NAVFAC

COMMONWEALTH OF VIRGINIA
EARL H. INGE, JR.
Lic. No. 035522
1/13/2023
PROFESSIONAL ENGINEER

BAMFORTH ENGINEERS + SURVEYORS

A/E INFO

APPROVED
FOR COMMANDER NAVFAC 11/21/2025

ACTIVITY
Approved by J. Scott Roberts, Asset Management Branch Head & Supervisory Facility Planner, PWD Beaufort, SC via email.

SATISFACTORY TO DATE	12/15/2022		
DES	EHI	DRW NAA	CHK DWS
PM/DM	KTB / RLH		
BRANCH MANAGER	NEK		
CHIEF ENG/ARCH	EJA		
FP ENGINEER	DSN		

DEPARTMENT OF THE NAVY
NAVAL FACILITIES ENGINEERING SYSTEMS COMMAND
DC CORE
MCAS BEAUFORT

NAVAL FACILITIES ENGINEERING SYSTEMS COMMAND – MID-ATLANTIC
NORFOLK, VA

P-475 AIRCRAFT MAINTENANCE HANGAR - VOLUME 6
SITE BASED BID AND ADDITIONAL OPTIONS

BEAUFORT, SC

HANGAR - FOUNDATION PLAN -SECTOR E

SCALE:	As indicated
EPROJECT NO.:	1363603
CONSTR. CONTR. NO.	
NAVFAC DRAWING NO.	12871462
SHEET	1367 OF 1412

SB111ZE

DRAWFORM REVISION: 25 AUGUST 2020

Autodesk Docs://20062 MFA1 S02 F35 Maintenance Hangar/BLDG P475 1363603-S-v1
11/11/2025 5:57:52 PM

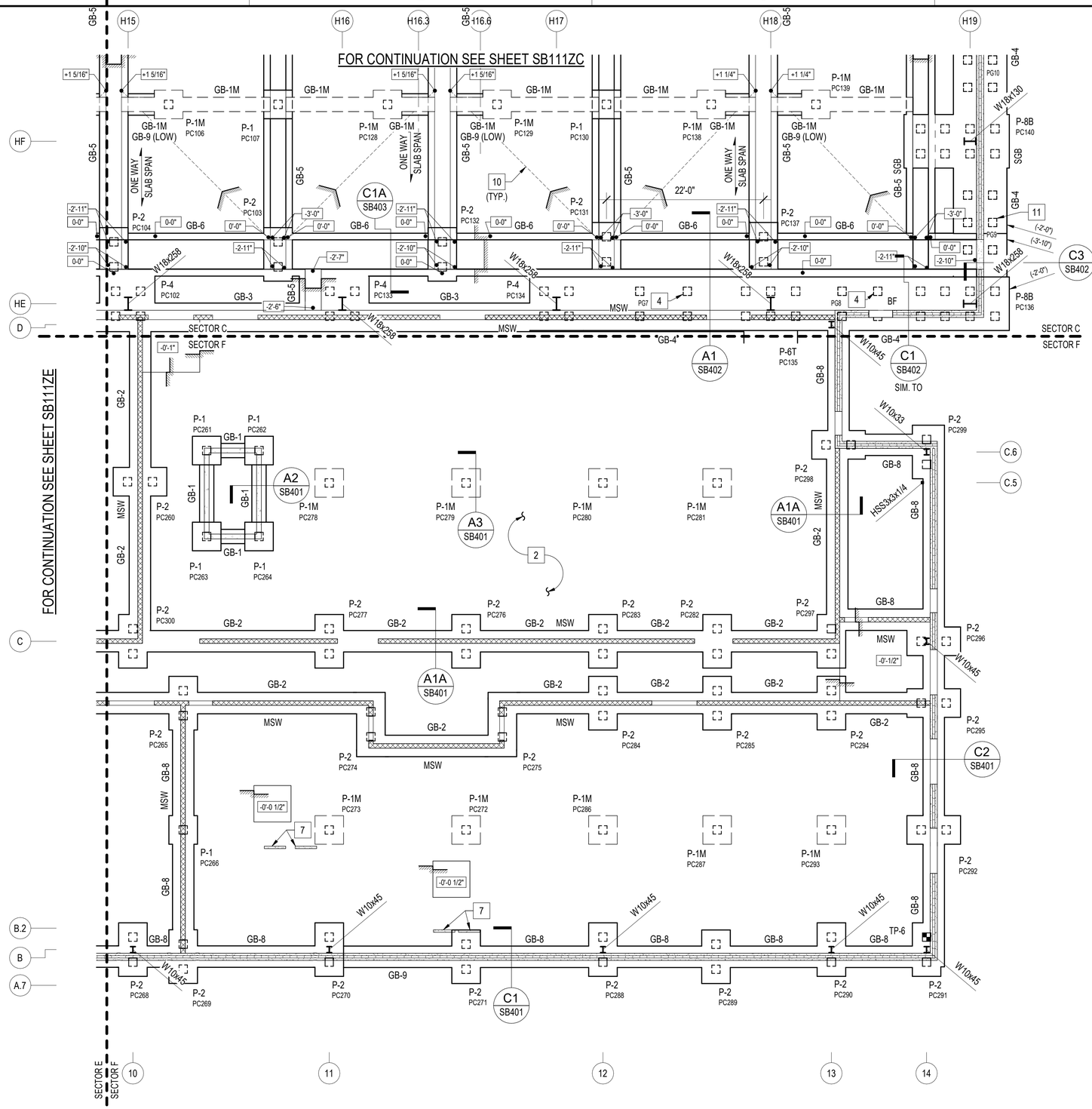

A1 FOUNDATION - BID OPTION - Sector F

1/8" = 1'-0" (FOR PLAN NOTES AND LEGEND SEE SHEET SB111A)

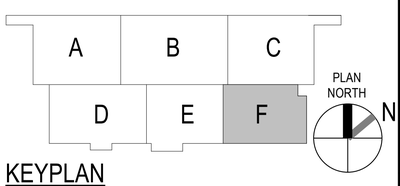

KEYPLAN

0 5' 10' 20' 30'

1/8" = 1'-0" GRAPHIC SCALE

NOTE:
IF THIS DRAWING IS LESS THAN 34" X 22"
IT IS A REDUCED SIZE DRAWING

SPEIGHT-MARSHALL-FRANCIS STRUCTURAL ENGINEERS
1228 PERIMETER PARKWAY, SUITE 201
VIRGINIA BEACH, VIRGINIA 23454
P: 757.427.1020
7914 CAROUSEL LANE SUITE 200
RICHMOND, VIRGINIA 23294
P: 804.464.4111
SMMF Job No: 20.009-B
WWW.SMANDF.CO

APPR	DATE	DESCRIPTION	STM
	10/2025	MOD P00006 AND MOD P00007	
	05/2023	MOD P00005	

NAVFAC

COMMONWEALTH OF VIRGINIA
EARL H. INGE, JR.
Lic. No. 035522
1/13/2023
PROFESSIONAL ENGINEER

BAMFORTH ENGINEERS + SURVEYORS

AE INFO

APPROVED
FOR COMMANDER NAVFAC 11/21/2025

ACTIVITY
Approved by J. Scott Roberts
Asset Management Branch Head &
Supervisory Facility Planner, PWD
Beaufort, SC via email.

SATISFACTORY TO DATE	12/15/2022
DES EHI / DRW NAA / CHK DWS	
PM/DM	KTB / RLH
BRANCH MANAGER	NEK
CHIEF ENG/ARCH	EJA
FP ENGINEER	DSN

NAVAL FACILITIES ENGINEERING SYSTEMS COMMAND
NORFOLK, VA

DEPARTMENT OF THE NAVY
NAVAL FACILITIES ENGINEERING SYSTEMS COMMAND ~ MID-ATLANTIC
DC CORE
MCAS BEAUFORT
BEAUFORT, SC
P-475 AIRCRAFT MAINTENANCE HANGAR - VOLUME 6
SITE BASED BID AND ADDITIONAL OPTIONS
HANGAR - FOUNDATION PLAN - SECTOR F

SCALE: As indicated
EPROJECT NO.: 1363603
CONSTR. CONTR. NO.
NAVFAC DRAWING NO. 12871463
SHEET 1368 OF 1412

SB111ZF

DRAWFORM REVISION: 25 AUGUST 2020

Autodesk Docs://2042 \ MFAT 502 F35 Maintenance Hangar/BLDG F475 \ SB\SB\S-S.rvt
11/11/2025 4:27:55 PM

CUI

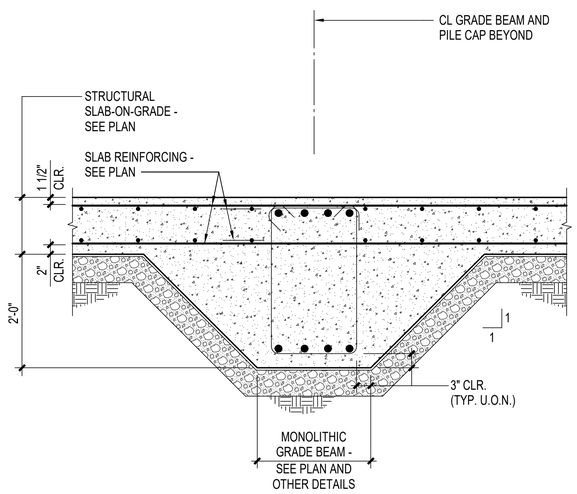

TYPICAL

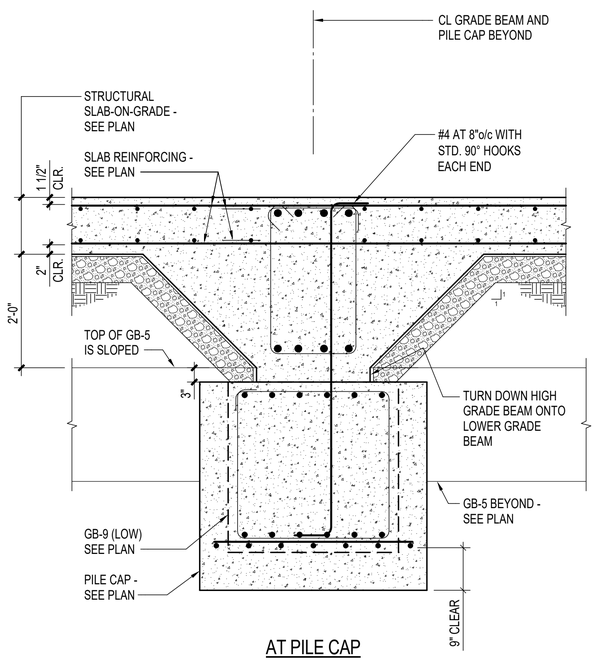

AT PILE CAP

A1 SECTION
3/4" = 1'-0"

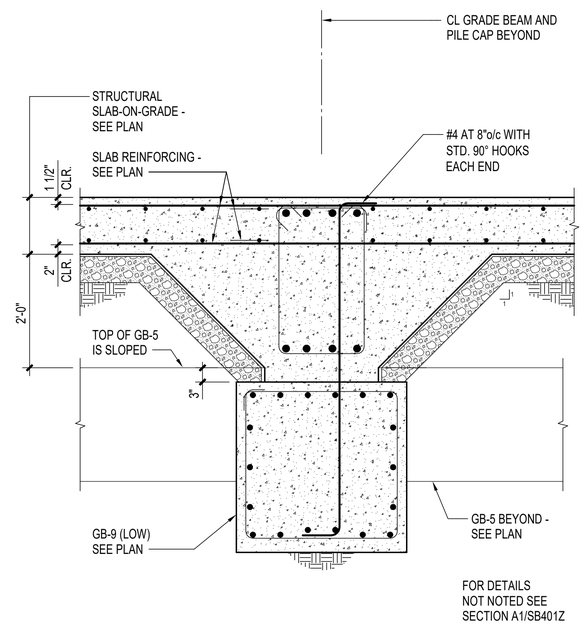

FOR DETAILS
NOT NOTED SEE
SECTION A1/SB401Z

A4 SECTION
3/4" = 1'-0"

0 4" 1' 2' 3' 4' 5'
3/4" = 1'-0" GRAPHIC SCALE

NOTE:
IF THIS DRAWING IS LESS THAN 34" X 22"
IT IS A REDUCED SIZE DRAWING

STM	DESCRIPTION	DATE	APPR
	MOD P00006 AND MOD P00007	10/2025	
	MOD P00005	05/2023	

NAVFAC

COMMONWEALTH OF VIRGINIA
EARL H. INGE, JR.
Lic. No. 035522
1/13/2023
PROFESSIONAL ENGINEER

BAMFORTH
ENGINEERS + SURVEYORS

AE INFO

APPROVED
FOR COMMANDER NAVFAC 11/21/2025

ACTIVITY
Approved by J. Scott Roberts,
Asset Management Branch Head &
Supervisory Facility Planner, PWD
Beaufort, SC via email.

SATISFACTORY TO DATE 12/15/2022

DES	EHI	DRW NAA	CHK DWS
PM/DM			KTB / RLH
BRANCH MANAGER			NEK
CHIEF ENG/ARCH			EJA
FP ENGINEER			DSN

DEPARTMENT OF THE NAVY
NAVAL FACILITIES ENGINEERING SYSTEMS COMMAND
DC-CORE
NAVAL FACILITIES ENGINEERING SYSTEMS COMMAND ~ MID-ATLANTIC NORFOLK, VA
MCAS BEAUFORT
BEAUFORT, SC
P-475 AIRCRAFT MAINTENANCE HANGAR - VOLUME 2A (BASE BID)
HANGAR - FOUNDATION SECTIONS

SCALE: 3/4" = 1'-0"
EPROJECT NO.: 1363603
CONSTR. CONTR. NO.
NAVFAC DRAWING NO. 12871464
SHEET 1369 OF 1412

SB401Z

DRAWFORM REVISION: 25 AUGUST 2020

Autodesk Docs://2042 UMF-FT 502 F35 Maintenance Hangar/BLDG F475 1363603-S.rvt
11/11/2025 6:57:55 PM

CUI

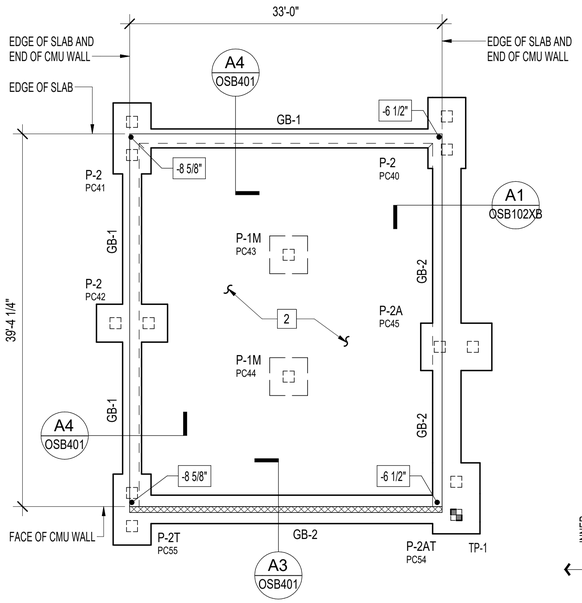

C1 FOUNDATION PLAN - MECHANICAL YARD

1/8" = 1'-0" (FOR PLAN NOTES AND LEGEND SEE VOLUME 3 SHEET SB102A)

GENERAL FOUNDATION PLAN NOTES :

1. SEE VOLUME 3 STRUCTURAL SHEETS FOR LEGEND, STRUCTURAL NOTES, ADDITIONAL GENERAL NOTES, PLAN NOTES, SECTIONS AND TYPCIAL DETAILS.
2. DRIVE 1 - 80 LONG TEST PILE AT LOCATION SHOWN ON THE FOUNDATION PLAN. TEST PILE LOCATIONS MAY BE RELOCATED TO DIFFERENT PILES IF APPROVED BY THE CONTRACTING OFFICER.

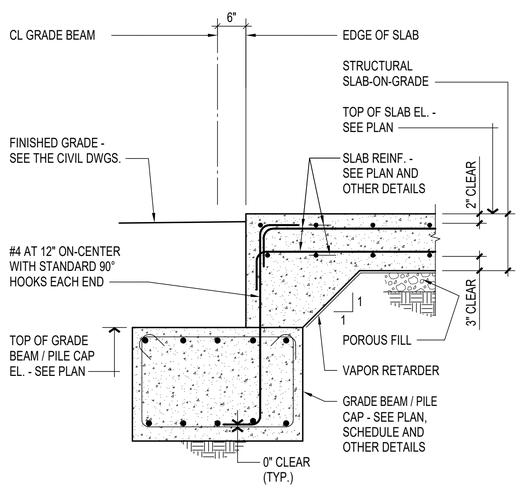

A1 SECTION

3/4" = 1'-0"

PLAN NORTH

0 ½" 1" 2" 3" 4"

1'-0" = 1'-0" GRAPHIC SCALE

NOTE:
IF THIS DRAWING IS LESS THAN 34" X 22"
IT IS A REDUCED SIZE DRAWING

STM	DESCRIPTION	DATE	APPR
	MOD P00006 AND MOD P00007	10/2025	
	MOD P00005	05/2023	

NAVFAC

COMMONWEALTH OF VIRGINIA
EARL H. INGE, JR.
Lic. No. 035522
1/13/2023
PROFESSIONAL ENGINEER

BAMFORTH ENGINEERS + SURVEYORS

AE INFO

APPROVED
FOR COMMANDER NAVFAC 11/21/2025

ACTIVITY: Approved by J. Scott Roberts, Asset Management Branch Head & Supervisory Facility Planner, PWD Beaufort, SC via email.

SATISFACTORY TO DATE 12/15/2022

DES	EHI	DRW	NAA	CHK	DWS
PM/DM	KTB / RLH				
BRANCH MANAGER					
CHIEF ENG/ARCH	EJA				
FP ENGINEER	DSN				

NAVAL FACILITIES ENGINEERING SYSTEMS COMMAND
NORFOLK, VA

DEPARTMENT OF THE NAVY
NAVAL FACILITIES ENGINEERING SYSTEMS COMMAND ~ MID-ATLANTIC

DC CORE:
MCAS BEAUFORT
BEAUFORT, SC

P-475 AIRCRAFT MAINTENANCE HANGAR - VOLUME 6
SITE BASED BID AND ADDITIONAL OPTIONS

FOUNDATION PLAN AND SECTION - MECHANICAL YARD

SCALE: As indicated
EPROJECT NO.: 1363603
CONSTR. CONTR. NO.
NAVFAC DRAWING NO. 12871465
SHEET 1370 OF 1412

OSB102XB

DRAWFORM REVISION: 25 AUGUST 2020

Autodesk Docs://20242 MF-FY 202 F25 Maintenance Hangar/BLDG P475_OSF 1363603.5.rvt
11/11/2025 6:59:34 PM

CUI

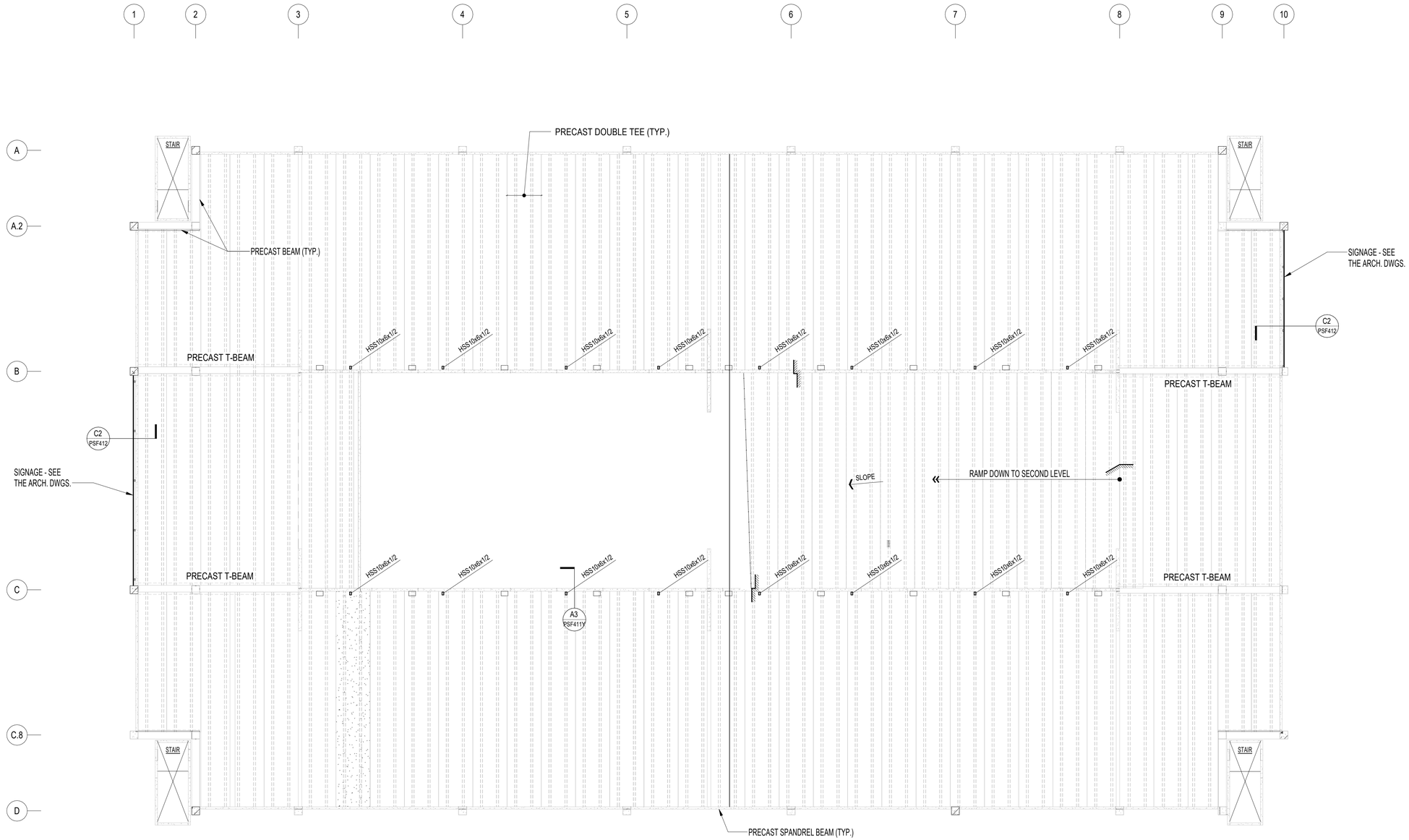

THIRD FLOOR FRAMING PLAN W/O PHOTOTAIC (PV) PANELS

1/16" = 1'-0" (FOR PLAN NOTES AND LEGEND SEE SHEET PSF401Y)

PLAN NORTH N

0 ½" 1" 2" 3" 4"
1'-0" = 1'-0" GRAPHIC SCALE

NOTE:
IF THIS DRAWING IS LESS THAN 34" X 22"
IT IS A REDUCED SIZE DRAWING

STM	DESCRIPTION	DATE	APPR
	MOD P00006 AND MOD P00007	10/2025	
	MOD P00005	05/2023	

NAVFAC

COMMONWEALTH OF VIRGINIA
EARL H. INGE, JR.
Lic. No. 035522
1/13/2023
PROFESSIONAL ENGINEER

BAMFORTH ENGINEERS + SURVEYORS

AE INFO

APPROVED
FOR COMMANDER NAVFAC 11/21/2025

ACTIVITY: Approved by J. Scott Roberts, Asset Management Branch Head & Supervisory Facility Planner, PWD Beaufort, SC via email.

SATISFACTORY TO DATE	12/15/2022
DES EHI / DRW JSC / CHK DWS	
PMDM	KTB / RLH
BRANCH MANAGER	CGM
CHIEF ENG/ARCH	EJA
FP ENGINEER	DSN

DEPARTMENT OF THE NAVY
NAVAL FACILITIES ENGINEERING SYSTEMS COMMAND
DC-CORE:
MCAS BEAUFORT
NAVAL FACILITIES ENGINEERING SYSTEMS COMMAND ~ MID-ATLANTIC
NORFOLK, VA
BEAUFORT, SC
P-475 AIRCRAFT MAINTENANCE HANGAR - VOLUME 6
SITE BASED BID AND ADDITIONAL OPTIONS
PARKING GARAGE - THIRD FLOOR FRAMING PLAN, BID OPTION W/O PANELS

SCALE:	1/16" = 1'-0"
EPROJECT NO.:	1363603
CONSTR. CONTR. NO.	
NAVFAC DRAWING NO.	12871466
SHEET	1371 OF 1412

PSF111Y

DRAWFORM REVISION: 25 AUGUST 2020

Autodesk Docs://0304_MF-X1 320 F35 Maintenance Hangar/P800-P475-1363603.rvt
11/11/2025 7:00:38 PM

CUI

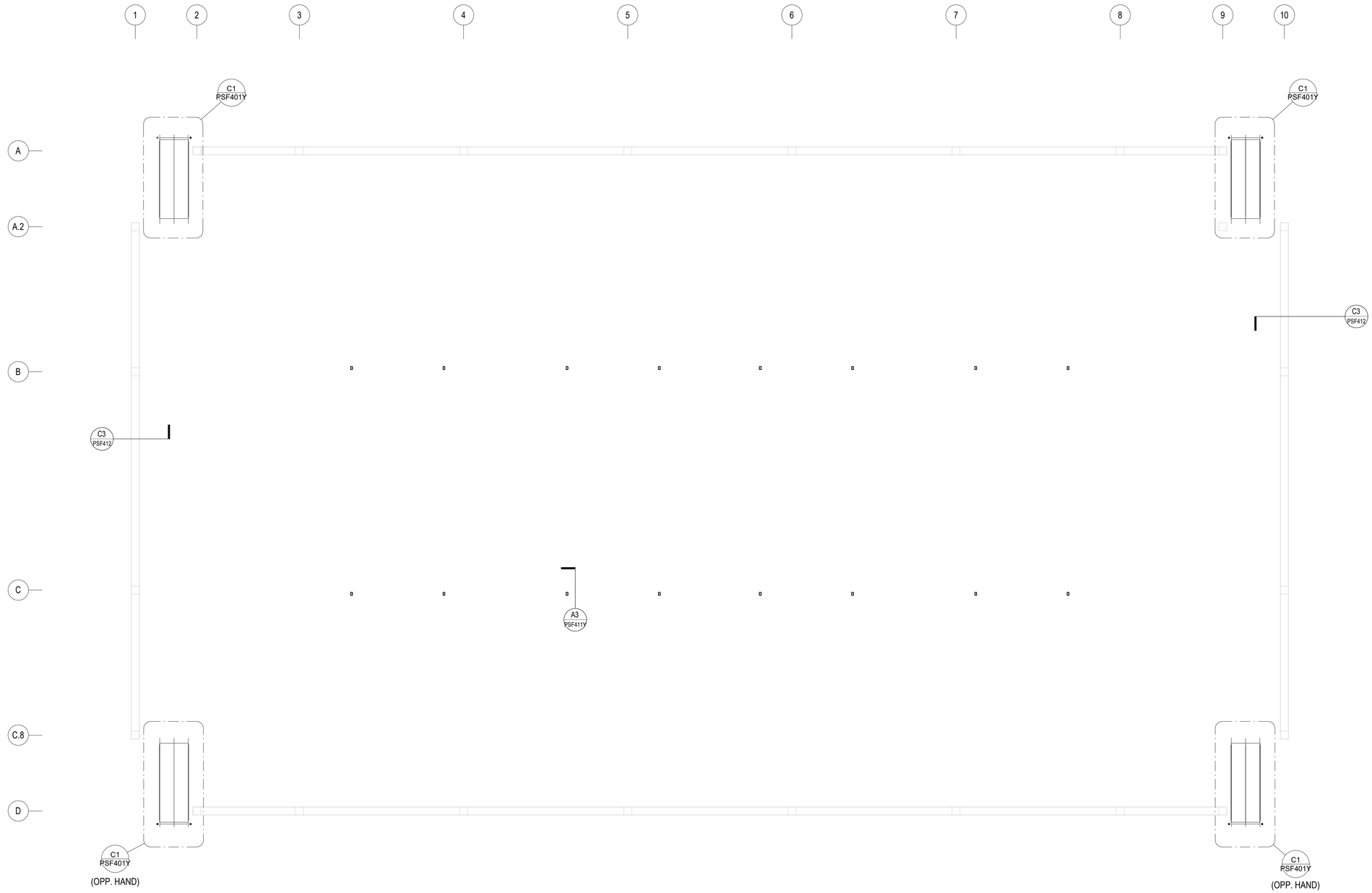

ROOF FRAMING PLAN W/O PHOTOTAIC (PV) PANELS

1/16" = 1'-0" (FOR PLAN NOTES AND LEGEND SEE SHEET PSF401Y)

PLAN NORTH

0 10' 20' 40' 60'

1/16" = 1'-0" GRAPHIC SCALE

NOTE:
IF THIS DRAWING IS LESS THAN 34" X 22"
IT IS A REDUCED SIZE DRAWING

STM	DESCRIPTION	DATE	APPR
	MOD P00006 AND MOD P00007	10/2025	
	MOD P00005	05/2023	

NAVFAC

COMMONWEALTH OF VIRGINIA
EARL H. INGE, JR.
Lic. No. 035522
1/13/2023
PROFESSIONAL ENGINEER

BAMFORTH
ENGINEERS + SURVEYORS

AE INFO

APPROVED
FOR COMMANDER NAVFAC 11/21/2025

ACTIVITY
Approved by J. Scott Roberts,
Asset Management Branch Head &
Supervisory Facility Planner, PWD
Beaufort, SC via email.

SATISFACTORY TO DATE 12/15/2022

DES	EHI	DRW	JSC	CHK	DWS
PM/DM	KTB / RLH				
BRANCH MANAGER					
CHIEF ENG/ARCH	EJA				
FP ENGINEER	DSN				

DEPARTMENT OF THE NAVY
NAVAL FACILITIES ENGINEERING SYSTEMS COMMAND
DC CODE:
NAVAL FACILITIES ENGINEERING SYSTEMS COMMAND ~ MID-ATLANTIC
NORFOLK, VA
MCAS BEAUFORT
BEAUFORT, SC
P-475 AIRCRAFT MAINTENANCE HANGAR - VOLUME 6
SITE BASE BID AND PARKING GARAGE PV PANELS OPTION
PARKING GARAGE - ROOF FRAMING PLAN, BID OPTION W/O PV PANELS

SCALE: 1/16" = 1'-0"
EPROJECT NO.: 1363603
CONSTR. CONTR. NO.
NAVFAC DRAWING NO. 12871467
SHEET 1372 OF 1412

PSF121Y

DRAWFORM REVISION: 25 AUGUST 2020

Autodesk Docs://0304_MF-A1 320 F35 Maintenance Hangar/P-475 13363603.rvt
11/11/2025 7:00:38 PM

CUI

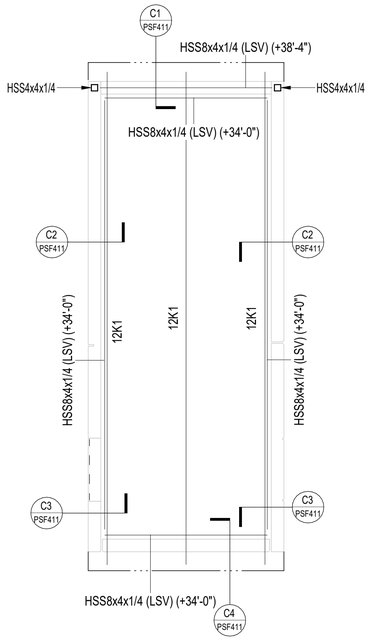

C1 TYPICAL STAIR ROOF FRAMING PLAN

1/4" = 1'-0"

GENERAL FRAMING PLAN NOTES :

A. SEE THE DIMENSION PLAN ON SHEET PSB101 AND THE ARCHITECTURAL DRAWINGS FOR DIMENSIONS NOT SHOWN.

B. FOR THE STRUCTURAL NOTES AND ABBREVIATIONS SEE SHEETS PS001 AND PS002.

C. ROOF JOISTS AND OTHER ROOF DECK SUPPORTS MUST BE SPACED EQUALLY BETWEEN GIVEN LOCATIONS, WITH A MAXIMUM SPACING OF 5'-0" ON-CENTER.

D. ROOF CONSTRUCTION MUST BE 1 1/2" STEEL ROOF DECK SPANNING BETWEEN SUPPORTS.

E. ALL PHOTOVOLTAIC PANEL TRELLIS FRAMING, PLATES AND CONNECTORS MUST BE HOT-DIPPED GALVANIZED.

F. SEE VOLUME 4 STRUCTURAL SHEETS FOR STRUCTURAL NOTES, SECTIONS, AND TYPICAL DETAILS

FRAMING PLAN LEGEND :

(+XX'-XX") = TOP OF STEEL (T.O.S.) ELEVATION - MEASURED FROM REFERENCE ELEVATION 0'-0" (HI = HIGH; LO = LOW; SL = SLOPE)

(X) = COLUMN GRID MARK

± = APPROXIMATE DIMENSION OR ELEVATION (FIELD VERIFY)

0 1' 5' 10' 15'

1/4" = 1'-0" GRAPHIC SCALE

NOTE:
IF THIS DRAWING IS LESS THAN 34" X 22"
IT IS A REDUCED SIZE DRAWING

STM	DESCRIPTION	DATE	APPR
	MOD P00006 AND MOD P00007	10/2025	
	MOD P00005	05/2023	

NAVFAC

COMMONWEALTH OF VIRGINIA
EARL H. INGE, JR.
Lic. No. 035522
1/13/2023
PROFESSIONAL ENGINEER

BAMFORTH ENGINEERS + SURVEYORS

AE INFO

APPROVED
FOR COMMANDER NAVFAC 11/21/2025

ACTIVITY: Approved by J. Scott Roberts, Asset Management Branch Head & Supervisory Facility Planner, PWD Beaufort, SC via email.

SATISFACTORY TO DATE 12/15/2022

DES	EHI	DRW	JSC	CHK	DWS

PM/DM KTB / RLH

BRANCH MANAGER

CHIEF ENG/ARCH EJA

FP ENGINEER DSN

DEPARTMENT OF THE NAVY
NAVAL FACILITIES ENGINEERING SYSTEMS COMMAND
DC CORE
NAVAL FACILITIES ENGINEERING SYSTEMS COMMAND ~ MID-ATLANTIC
NORFOLK, VA
MCAS BEAUFORT
BEAUFORT, SC
P-475 AIRCRAFT MAINTENANCE HANGAR - VOLUME 6
SITE BASE BID AND PARKING GARAGE PV PANELS OPTION
PARKING GARAGE - FRAMING PLAN DETAILS, BID OPTION W/O PV PANELS

SCALE: As indicated

EPROJECT NO.: 1363603

CONSTR. CONTR. NO.

NAVFAC DRAWING NO. 12871468

SHEET 1373 OF 1412

PSF401Y

DRAWFORM REVISION: 25 AUGUST 2020

Autodesk Docs://2024C VMFA T 505 739 Maintenance Hangar/PRNO P475 1363603-S.rvt
11/11/2025 7:00:38 PM

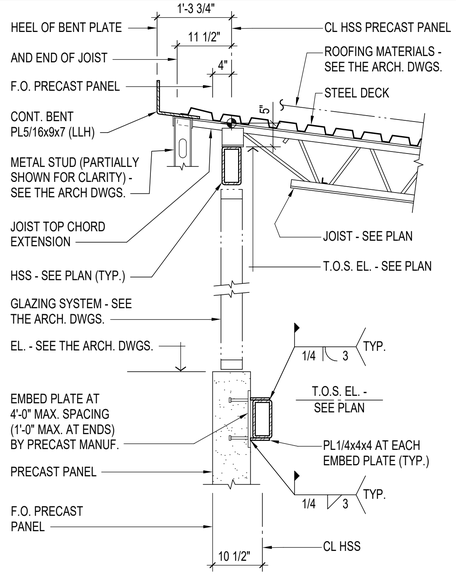

C1 SECTION
3/4" = 1'-0"

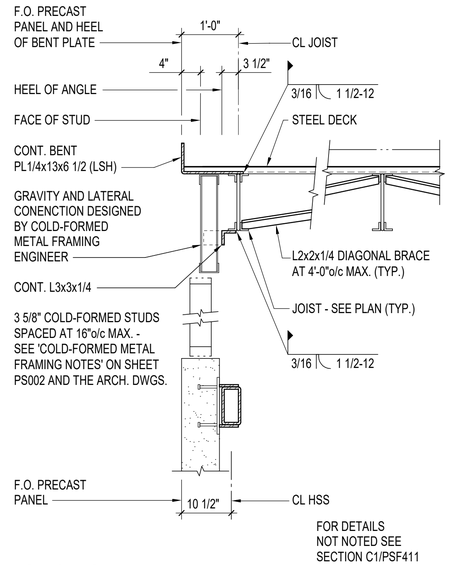

C2 SECTION
3/4" = 1'-0"

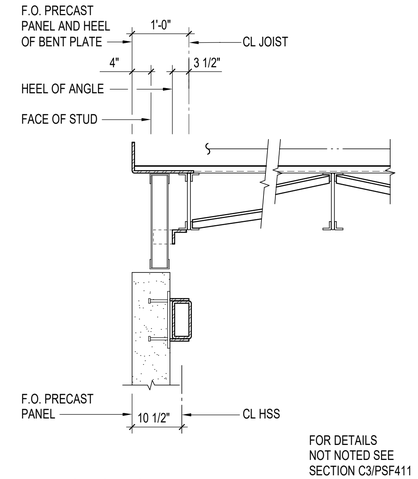

C3 SECTION
3/4" = 1'-0"

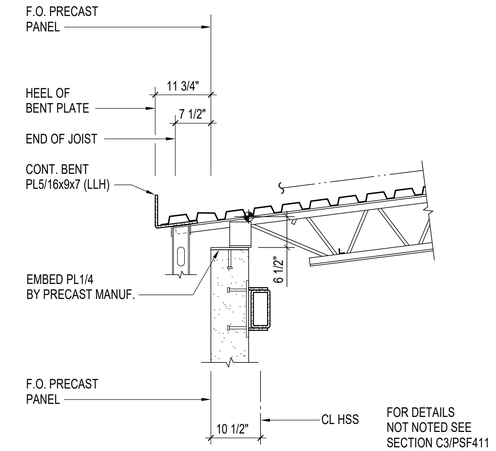

C4 SECTION
3/4" = 1'-0"

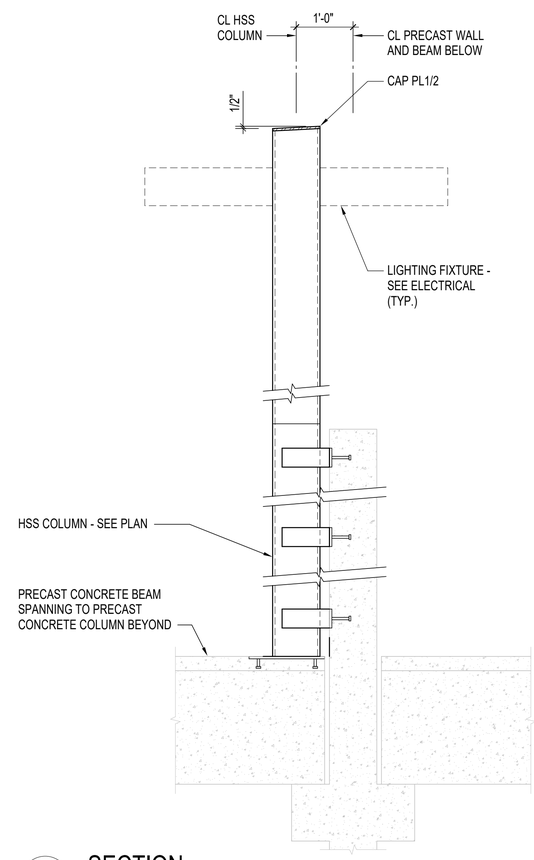

A3 SECTION
3/4" = 1'-0"

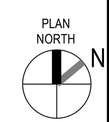

0 ½" 1" 2" 3" 4"
1'-0" = 1'-0" GRAPHIC SCALE

NOTE:
IF THIS DRAWING IS LESS THAN 34" X 22"
IT IS A REDUCED SIZE DRAWING

STM	DESCRIPTION	DATE	APPR
	MOD P00006 AND MOD P00007	10/2025	
	MOD P00005	05/2023	

NAVFAC

COMMONWEALTH OF VIRGINIA
EARL H. INGE, JR.
Lic. No. 035522
1/13/2023
PROFESSIONAL ENGINEER

BAMFORTH ENGINEERS + SURVEYORS

AE INFO

APPROVED
FOR COMMANDER NAVFAC 11/21/2025

ACTIVITY
Approved by J. Scott Roberts, Asset Management Branch Head & Supervisory Facility Planner, PWD Beaufort, SC via email.

SATISFACTORY TO DATE 12/15/2022

DES	EHI	DRW	JSC	CHK	DWS

PM/DM KTB / RLH
BRANCH MANAGER
CHIEF ENG/ARCH EJA
FP ENGINEER DSN

DEPARTMENT OF THE NAVY
NAVAL FACILITIES ENGINEERING SYSTEMS COMMAND
DC CORE
NAVAL FACILITIES ENGINEERING SYSTEMS COMMAND - MID-ATLANTIC NORFOLK, VA
MCAS BEAUFORT
BEAUFORT, SC
P-475 AIRCRAFT MAINTENANCE HANGAR - VOLUME 6
SITE BASE BID AND PARKING GARAGE PV PANELS OPTION
PARKING GARAGE - - FRAMING SECTIONS, BID OPTION W/O PV PANELS

SCALE: 3/4" = 1'-0"
EPROJECT NO.: 1363603
CONSTR. CONTR. NO.
NAVFAC DRAWING NO. 12871469
SHEET 1374 OF 1412

PSF411Y

DRAWFORM REVISION: 25 AUGUST 2020

Autodesk Docs://3D/AE VMFA F-35B Maintenance Hangar/PRKG F425 1363603-S.rvt
11/11/2025 7:00:29 PM