GENERAL NOTES:

1. THE STRUCTURAL DRAWINGS MUST BE USED IN CONJUNCTION WITH THE ARCHITECTURAL, CIVIL, MECHANICAL, PLUMBING, AND ELECTRICAL DRAWINGS AND THE SPECIFICATIONS. THE CONTRACTOR MUST VERIFY THE REQUIREMENTS OF OTHER TRADES FOR ITEMS TO BE PLACED OR SET IN THE STRUCTURAL WORK.

2. THIS STRUCTURE HAS BEEN DESIGNED IN ACCORDANCE WITH THE PROVISIONS OF THE INTERNATIONAL BUILDING CODE, 2018 EDITION, AS ADOPTED BY THE UNIFIED FACILITIES CRITERIA, AND AS FOLLOWS:

A.	UCF 1-200-01	DoD BUILDING CODE, OCTOBER 8, 2019 WITH CHANGE 1, OCTOBER 1, 2020
B.	UCF 3-220-01	GEOTECHNICAL ENGINEERING, NOVEMBER 1, 2012
C.	UFC 3-301-01	STRUCTURAL ENGINEERING, OCTOBER 1, 2019
D.	UFC 3-320-06A	CONCRETE FLOOR SLABS-ON-GRADE SUBJECTED TO HEAVY LOADS, MARCH 1, 2005
E.	UFC 4-010-01	DoD MINIMUM ANTITERRORISM STANDARDS FOR BUILDINGS, DECEMBER 8, 2018 WITH CHANGE 1, AUGUST 1, 2020

3. THE WORK UNDER THE FOLLOWING SPECIFICATION SECTIONS IS SUBJECT TO SPECIAL INSPECTIONS AND TESTS AS DESCRIBED IN SECTION 1704 OF THE INTERNATIONAL BUILDING CODE, 2018 EDITION:
   - A. 033000 - CAST-IN-PLACE CONCRETE
   - B. 033433 - PRECAST PRESTRESSED STRUCTURAL CONCRETE
   - C. 034100 - STRUCTURAL PRECAST CONCRETE
   - D. 034500 - PRECAST ARCHITECTURAL CONCRETE
   - E. 042000 - UNIT MASONRY
   - F. 051200 - STRUCTURAL STEEL
   - G. 052100 - STEEL JOIST FRAMING
   - H. 053000 - STEEL DECK
   - I. 054000 - COLD-FORMED METAL FRAMING
   - J. 312300.0020 - EXCAVATION AND FILL
   - K. 316213.20 - PRECAST / PRESTRESSED CONCRETE PILE

   THIS PROJECT IS SUBJECT TO IBC SPECIAL INSPECTION REQUIREMENTS AS MODIFIED BY UFC 3-301-01. THE STATEMENT AND SCHEDULE OF SPECIAL INSPECTIONS DEFINE THE SCOPE OF SPECIAL INSPECTIONS ARE INCLUDED WITH THE PROJECT SPECIFICATIONS. SPECIAL INSPECTIONS FOR WIND REQUIREMENTS AND SEISMIC RESISTANCE ARE NOT REQUIRED SINCE THE NOMINAL WIND SPEED FOR THE PROJECT LOCATION DOES NOT EXCEED 110 MPH AND THE RISK CATEGORY IS II. STRUCTURAL OBSERVATIONS FOR PROGRESSIVE COLLAPSE AVOIDANCE ARE NOT REQUIRED.

4. THE CONTRACTOR MUST BE RESPONSIBLE FOR TEMPORARY SHORING AND BRACING REQUIRED TO ERECT AND HOLD THE STRUCTURE IN PROPER ALIGNMENT UNTIL PERMANENT SUPPORTS AND LATERAL BRACING ARE IN PLACE.

5. REFER TO THE SPECIFICATIONS FOR ADDITIONAL REQUIREMENTS IN EACH SECTION.

6. SPECIFIC NOTES AND DETAILS ON THE DRAWINGS MUST TAKE PRECEDENCE OVER THE STRUCTURAL NOTES AND TYPICAL DETAILS.

7. CONSULTANTS' DRAWINGS, INCLUDING THE STRUCTURAL DRAWINGS, ARE CONSIDERED SUPPLEMENTARY TO THE ARCHITECTURAL DRAWINGS. ANY OMISSIONS OR CONFLICTS, INCLUDING DIMENSIONS, BETWEEN VARIOUS ELEMENTS OF THE CONSULTANTS' DRAWINGS AND/OR SPECIFICATIONS MUST BE BROUGHT TO THE ATTENTION OF THE ARCHITECT CONTRACTING OFFICER PRIOR TO PROCEEDING WITH THE WORK.

8. THE STRUCTURAL DOCUMENTS MUST NOT BE REPRODUCED, OR COPIED IN WHOLE OR IN PART BY THE CONTRACTOR OR SUBCONTRACTORS FOR PREPARATION OF SHOP DRAWINGS OR OTHER SUBMITTALS WITHOUT WRITTEN PERMISSION FROM THE ARCHITECT CONTRACTING OFFICER.

9. LOADS USED IN THE DESIGN OF THIS STRUCTURE ARE AS FOLLOWS:

A. LIVE LOADS:		
1.	STRUCTURAL SLAB-ON-GRADE	100 PSF
2.	LOBBIES	100 PSF
3.	STAIRWAYS	100 PSF
4.	GARAGE PARKING LEVELS	40 PSF
5.	ROOF (NON-PARKING)	20 PSF
B. SNOW DESIGN DATA:		
1.	GROUND SNOW LOAD	5 PSF
2.	RAIN-ON-SNOW SURCHARGE LOAD	5 PSF
C. WIND DESIGN DATA:		
1.	ULTIMATE DESIGN WIND SPEED	139 MPH
2.	NOMINAL DESIGN WIND SPEED	108 MPH
3.	RISK CATEGORY	II
4.	WIND EXPOSURE	C
5.	INTERNAL PRESSURE COEFFICIENT	±0.18
6.	SEE SHEET PS003 FOR 'COMPONENTS AND CLADDING ULTIMATE DESIGN' PRESSURE TABLE.	

GENERAL NOTES (CONTINUED):

D. SEISMIC DESIGN DATA:

1.	RISK CATEGORY	II
2.	SEISMIC IMPORTANCE FACTOR	1.0
3.	SS	(SITE SPECIFIC SDS VALUES)
4.	S1	(SITE SPECIFIC SD1 VALUES)
5.	SITE CLASS	F
6.	SDS	0.435g
7.	SD1	0.251g
8.	SEISMIC DESIGN CATEGORY	D
9.	DESIGN BASE SHEAR	1,809 KIPS
10.	SEISMIC RESPONSE COEFFICIENT	0.087g
11.	RESPONSE MODIFICATION FACTOR	5
12.	ANALYSIS PROCEDURE	EQUIVALENT LATERAL FORCE
13.	BASIC SEISMIC-FORCE-RESISTING SYSTEM IS SPECIAL REINFORCED CONCRETE SHEAR WALLS	

E. RAIN DESIGN DATA

1.	100 YEAR (1 HOUR RAINFALL)	4.25 INCHES

10. NO MECHANICAL UNITS HAVE BEEN CONSIDERED IN THE STRUCTURAL DESIGN. SUBMIT LOCATION, DIMENSIONS AND OPERATING WEIGHTS OF ANY UNITS WEIGHING MORE THAN 100 POUNDS TO THE STRUCTURAL ENGINEER FOR REVIEW, PRIOR TO PLACEMENT.

11. THE FIRST FLOOR IS A STRUCTURAL SLAB. ALL UTILITIES MUST BE SUPPORTED FROM THE SLAB AND UTILITIES MUST HAVE FLEXIBLE CONNECTIONS AS THE UTILITY ENTERS THE BUILDING. REFER TO OTHER DISCIPLINES DRAWINGS FOR SUPPORT DETAILS. AT LOCATIONS WHERE UTILITIES ENTER THE BUILDING, THE PENETRATION THROUGH THE FOUNDATION WALLS, PRECAST WALLS AND TURNDOWN SLAB EDGES MUST BE 6" LARGER THAN THE UTILITY TO ALLOW 3" OF SPACE AROUND THE UTILITY.

DRIVEN PILE NOTES:

1. PILING MUST COMPLY WITH PRECAST CONCRETE INSTITUTE MNL-116 AND SECTIONS 1808 AND 1810 OF THE 2018 INTERNATIONAL BUILDING CODE. PILING MUST BE 14 INCH SQUARE PRECAST, PRESTRESSED CONCRETE SECTIONS.

2. PILE FOUNDATIONS HAVE BEEN DESIGNED IN ACCORDANCE WITH THE RECOMMENDATIONS IN THE GEOTECHNICAL EXPLORATION REPORT PREPARED BY TERRACON CONSULTANTS, INC. DATED DECEMBER 14, 2020.

3. CONCRETE MUST BE NORMAL WEIGHT AND MUST OBTAIN 28 DAY COMPRESSIVE STRENGTH OF 7,000 PSI.

4. ALLOWABLE (UNLESS OTHERWISE NOTED) DESIGN CAPACITIES ARE AS FOLLOWS (SEE A1/SB502 'PILE DESIGN CRITERIA' FOR ADDITIONAL INFORMATION):

A.	COMPRESSION	98 TONS
B.	TENSION	65 TONS
C.	LATERAL (ULTIMATE FOR FREE HEAD CONNECTION)	4.5 TONS
D.	ULTIMATE DRIVING RESISTANCE	247 TONS
E.	DRIVING RESISTANCE IS BASED ON A FACTOR OF SAFETY OF 2.0 AND A 53 KIP ALLOWANCE FOR DOWNDRAG.	

5. BASE BID LENGTH ON DRIVING ALL PILES, EXCEPT TEST PILES, TO AN ACTUAL TIP ELEVATION PF -50 FEET.

6. THE CONTRACTOR MUST DRIVE 6 - 85 FOOT LONG TEST PILES IN LOCATIONS SHOWN ON THE FOUNDATION PLAN. TEST PILE LOCATOINS MAY BE RELOCATED TO DIFFERENT PILES IF APPROVED BY THE CONTRACTING OFFICER.

7. PILES SHOWN ON PLAN MUST BE TESTED IN USING PILE DRIVING ANALYZER (PDA) TO MEASURE DRIVING STRESSES, EVALUATE HAMMER PERFORMANCE, AND VERIFY CAPACITIES. THE TESTS MUST BE DONE IN ACCORDANCE WITH THE SPECIFICATIONS AND UNDER THE DIRECTION OF THE GEOTECHNICAL ENGINEER.

8. IN ADDITION TO PDA TESTING, CONDUCT STATIC LOAD TESTS ON ONE OF THE TEST PILES PER THE SPECIFICATIONS.

9. THE GENERAL CONTRACTOR MUST PROVIDE AN AS-INSTALLED PILE DRAWING FOR EACH PILE WITH PILE LOCATION DISCREPANCIES NOTED ON THE DRAWINGS.

10. EXISTING BUILDINGS ON THE SITE ARE PILE SUPPORTED AND GEOTHERMAL WELLS EXIST BENEATH THE EXISTING PARKING LOTS. EXISTING PILES AND GEOTHERMAL WELLS WILL REMAIN AND BE CUT OFF 2'-0" BELOW NEW BUILDING SLABS AND FOUNDATIONS. NEW PILES MUST BE PLACED 14" CLEAR FROM THE EXISTING PILES AND WELLS . THE EXACT LOCATION OF THE EXISTING PILES AND WELLS ARE UNKNOWN. THE EXISTING PILES AND WELLS MUST BE EXPOSED AND LOCATED DURING CONSTRUCTION. IN ORDER TO MAINTAIN THE 14" CLEARANCE BETWEEN NEW AND EXISTING, THE NEW PILES MUST BE FIELD ADJUSTED DURING PILE INSTALLATION. THE PROCESS FOR THIS FIELD ADJUSTMENT WILL BE TO UNCOVER THE EXISTING PILES AND WELLS. SURVEY THE LOCATION OF THE PILES AND WELLS AND SUBMIT THE SURVEY TO THE STRUCTURAL ENGINEER. THE STRUCTURAL ENGINEER WILL EVALUATE THE REQUIRED LOCATION OF NEW PILES RELATIVE TO THE EXISTING PILES AND WELLS AND PROVIDE DIRECTION TO THE CONTRACTOR ON WHERE TO DRIVE THE NEW PILES. AFTER THE EVALUATION OF EXISTING CONDITIONS AND FOUNDATION REDESIGN, THE STRUCTURAL ENGINEER WILL PROVIDE DIRECTION ON WHICH PILES NEED TO BE RELOCATED. THE REVIEW AND REDESIGN TIME FOR EACH SURVEY SUBMITTAL IS 30 DAYS.

11. PILING MUST BE DRIVEN TO A MAXIMUM TOLERANCE IN ANY DIRECTION OF THREE INCHES PER PILE. WHERE AN INDIVIDUAL PILE IS DRIVEN OUT OF POSITION MORE THAN THREE INCHES IN ANY DIRECTION AND/OR WHERE THE CENTER OF GRAVITY OF A PILE GROUP IS OUT OF POSITION MORE THAN TWO INCHES, THE CONTRACTOR MAY BE REQUIRED TO DRIVE AN ADDITONAL PILE OR PILES TO COMPENSATE FOR THE ECCENTRICITY OF THE PILE AND/OR PILE GROUP.

12. FOUNDATION HAVE BEEN DESIGNED FOR THE LOADS SHOWN ON THE 'PRECAST LOAD PLAN' ON SHEET PSB107. THE LOADS WERE CALCULATED BY SPEIGHT, MARSHALL AND FRANCIS, P.C. BASED ON THE SYSTEM PRESENTED WITHIN THESE DRAWINGS. IF THE ACTUAL LOADS VARY FROM THOSE INDICATED ON SHEET PSB107, MODIFICATIONS TO THE FOUNDATION DESIGN MAY BE NECESSARY. THE CONTRACTOR MUST PROVIDE ACTUAL LOADS (GRAVITY, SEISMIC AND WIND) TO THE ARCHITECT AS SOON AS POSSIBLE, SO THE VERIFICATION OF THE FOUNDATION AS SHOWN HEREIN IS ADEQUATE.

CAST-IN-PLACE CONCRETE NOTES:

1. CAST-IN-PLACE CONCRETE HAS BEEN DESIGNED IN ACCORDANCE WITH THE AMERICAN CONCRETE INSTITUTE (ACI) "BUILDING CODE REQUIREMENTS FOR STRUCTURAL CONCRETE (ACI 318-14) AND COMMENTARY (ACI 318R-14)".

2. CONCRETE MUST BE NORMAL WEIGHT AND MUST OBTAIN 28 DAY COMPRESSIVE STRENGTHS AS FOLLOWS:

A.	SLAB-ON-GRADE	4,500 PSI
2.	CONCRETE OTHERWISE NOTED	4,000 PSI

3. REINFORCING MATERIALS MUST BE AS FOLLOWS:
   - A. REINFORCING BARS - ASTM A615, GRADE 60, DEFORMED ALTERNATIVELY, USE GRADE 40 FOR TIES AND STIRRUPS

4. ALL REINFORCING STEEL AND EMBEDDED ITEMS MUST BE ACCURATELY PLACED IN THE POSITIONS SHOWN AND ADEQUATELY TIED AND SUPPORTED BEFORE CONCRETE IS PLACED TO PREVENT DISPLACEMENT BEYOND PERMITTED TOLERANCES.

5. MINIMUM CONCRETE COVER FOR REINFORCING STEEL AS INDICATED ON THE DRAWINGS MUST GOVERN WHEN IN CONFLICT WITH ACI 318-14 TABLE 20.6.1.3.1.

6. UNLESS OTHERWISE NOTED ON THE STRUCTURAL DRAWINGS:
   - A. LAP SPLICE LENGTHS MUST COMPLY WITH 'CAST-IN-PLACE CONCRETE REINFORCING BAR LAP SPLICE SCHEDULE' ON SHEET PSB003
   - B. USE TENSION BAR LAP SPLICE LENGTHS
   - C. SPLICES MAY BE MADE WITH MECHANICAL SPLICES (AT CONTRACTOR'S OPTION). MECHANICAL SPLICES MUST BE:
     1. CAPABLE OF RESISTING 125% OF THE TENSION CAPACITY OF THE SPLICED BAR
     2. POSITIVE-CONNECTING TYPE COUPLERS
     3. SUBMITTED FOR REVIEW
     4. STAGGERED A MINIMUM OF 24" ALONG THE LONGITUDINAL AXIS OF ADJACENT BARS

STRUCTURAL PRECAST CONCRETE NOTES:

1. STRUCTURAL PRECAST CONCRETE MUST BE DESIGNED IN ACCORDANCE WITH THE AMERICAN CONCRETE INSTITUTE (ACI) "BUILDING CODE REQUIREMENTS FOR REINFORCED CONCRETE" ACI 318-14.

2. THE CONTRACTOR MUST SUBMIT SHOP DRAWINGS PREPARED BY A REGISTERED PROFESSIONAL ENGINEER FOR THE DESIGN OF STRUCTURAL PRECAST CONCRETE, INCLUDING DESIGN LOADING AND REACTIONS APPLIED TO THE SUPPORTING STRUCTURE.

3. CONNECTION DETAILS SHOWN ARE SCHEMATIC ONLY. ALL CONNECTIONS MUST BE DEVELOPED BY THE PRECAST MANUFACTURER TO SUIT THE SPECIFIED LOADS AND CONNECTIONS MUST ACCOUNT FOR THERMAL MOVEMENT AND CREEP OF PRECAST MEMBERS. DETAIL ALL CONNECTIONS ON SHOP DRAWINGS.

4. IN ADDITION TO THEIR OWN DEAD WEIGHT AND THE DEAD LOADS SHOWN, PRECAST MEMBERS MUST BE DESIGNED TO SUPPORT THE LIVE LOADS INDICATED IN THE GENERAL NOTES.

5. CONCRETE MUST BE NORMAL WEIGHT AND MUST OBTAIN A 28 DAY COMPRESSIVE STRENGTH OF 5,000 PSI.

6. REINFORCING MATERIALS MUST BE AS FOLLOWS:
   - A. REINFORCING BARS: ASTM A615, GRADE 60, DEFORMED ALTERNATIVELY, USE GRADE 40 FOR TIES AND STIRRUPS
   - B. WELDED WIRE REINFORCEMENT: ASTM A185

7. PRESTRESSING TENDONS MUST COMPLY WITH ASTM A416 GRADE 270, UNCOATED, 7-WIRE STRESS-RELIEVED STRAND.

SPEIGHT·MARSHALL·FRANCIS
STRUCTURAL ENGINEERS
1228 PERIMETER PARKWAY, SUITE 201
VIRGINIA BEACH, VIRGINIA 23454
P: 757.427.1020
7814 CAROUSEL LANE SUITE 200
RICHMOND, VIRGINIA 23294
P: 804.464.4111
WWW.SMANDF.CO
SM&F Job No: 20.009-B

NOTE:
IF THIS DRAWING IS LESS THAN 34" X 22"
IT IS A REDUCED SIZE DRAWING

SYM	DESCRIPTION	DATE	APPR
	MOD P00006 AND MOD P00007	10/2025	
	MOD P00005	05/2023	

NAVFAC

COMMONWEALTH OF VIRGINIA
EARL H. INGE, JR.
Lic. No. 035522
1/13/2023
PROFESSIONAL ENGINEER

BAMFORTH
ENGINEERS + SURVEYORS

A/E INFO

APPROVED
FOR COMMANDER NAVFAC 11/21/2025

ACTIVITY
Approved by J. Scott Roberts, Asset Management Branch Head & Supervisory Facility Planner, PWD Beaufort, SC via email.

SATISFACTORY TO DATE	12/15/2022
DES EHI / DRW JSC / CHK DWS	
PM/DM	KTB / RLH
BRANCH MANAGER	NEK
CHIEF ENG/ARCH	EJA
FP ENGINEER	DSN

DEPARTMENT OF THE NAVY
NAVAL FACILITIES ENGINEERING SYSTEMS COMMAND
NAVAL FACILITIES ENGINEERING SYSTEMS COMMAND ~ MID-ATLANTIC
NORFOLK, VA
DC CORE
MCAS BEAUFORT BEAUFORT, SC
P-475 AIRCRAFT MAINTENANCE HANGAR - VOLUME 4 (PARKING GARAGE OPTION)
STRUCTURAL NOTES

SCALE:	12" = 1'-0"
EPROJECT NO.:	1363603
CONSTR. CONTR. NO.	
NAVFAC DRAWING NO.	12860285
SHEET	1064 OF 1412

PS001

DRAWFORM REVISION: 25 AUGUST 2020

Autodesk Docs://20042 VMFAT 502 F35 Maintenance Hangar/PRKG P475 1363603-S.rvt
11/11/2025 11:32:40 AM

CONCRETE MASONRY NOTES:

1. CONCRETE MASONRY HAS BEEN DESIGNED IN ACCORDANCE WITH THE AMERICAN CONCRETE INSTITUTE (ACI) "BUILDING CODE REQUIREMENTS AND SPECIFICATIONS FOR MASONRY STRUCTURES" TMS 402/602-16.
2. CONCRETE MASONRY CONSTRUCTION MUST CONFORM TO THE "BUILDING CODE REQUIREMENTS AND SPECIFICATIONS FOR MASONRY STRUCTURES" TMS 402/602-16.
3. CONCRETE MASONRY UNITS MUST CONFORM TO ASTM C90 AND BE MADE WITH LIGHTWEIGHT OR NORMAL WEIGHT AGGREGATE. THE COMPRESSIVE STRENGTH OF MASONRY, F'm, EXPRESSED AS FORCE PER UNIT OF NET CROSS-SECTIONAL AREA, MUST BE 2,000 PSI AT 28 DAYS.
4. REINFORCING STEEL MUST COMPLY WITH ASTM A615, GRADE 60. SHOP FABRICATE REINFORCING BARS SHOWN TO BE BENT OR HOOKED.
5. GROUT MUST COMPLY WITH ASTM C476, AND MUST BE PROPORTIONED TO OBTAIN A 28 DAY COMPRESSIVE STRENGTH OF 2,000 PSI.
6. MORTAR MUST COMPLY WITH ASTM C270, TYPE S OR M. AGGREGATE FOR MORTAR MUST COMPLY WITH ASTM C144. AGGREGATE FAILING TO COMPLY WITH ASTM C144 GRADATION REQUIREMENTS MAY BE USED PROVIDED THE MORTAR CAN BE PREPARED TO COMPLY WITH THE AGGREGATE RATIO, WATER RETENTION AND COMPRESSIVE STRENGTH REQUIREMENTS OF THE PROPERTY SPECIFICATIONS OF ASTM C270. USE TYPE M BELOW GRADE AND TYPE S ABOVE GRADE (UNLESS CELLS ARE GROUTED SOLID).
7. VERTICAL REINFORCING BARS MUST BE THE GIVEN SIZE AND SPACING SHOWN. LAP REINFORCING AT ALL SPLICES AS FOLLOWS:

A.	#3 - 19"	D.	#6 - 52"	G.	#9 - 119"
B.	#4 - 25"	E.	#7 - 67"	H.	#10 OR LARGER - 'MECHANICALLY SPLICED'
C.	#5 - 31"	F.	#8 - 93"		

8. REBAR DOWELS MUST BE THE SAME SIZE AND SPACING AS VERTICAL REINFORCING FROM FOUNDATION. DOWELS MUST HAVE STANDARD ACI HOOKS.
9. DISCONTINUE ALL HORIZONTAL REINFORCING AT CONTROL JOINTS.
10. HORIZONTAL JOINT REINFORCING MUST BE STANDARD 9 GAGE LADDER TYPE IN CMU WALLS AT 16" ON-CENTER. JOINT REINFORCING MUST COMPLY WITH ASTM A951 AND MUST BE HOT-DIPPED GALVANIZED ACCORDING TO ASTM A153, CLASS B.
11. GROUT ALL CELLS SOLID BELOW FINISHED FIRST FLOOR.
12. VERTICAL REINFORCING MUST HAVE BAR POSITIONERS AT SPACING NOT TO EXCEED 200 BAR DIAMETERS, AT GROUT LIFT HEIGHTS OR BAR SPLICE LOCATIONS, WHICHEVER IS LESS.
13. NON-LOAD BEARING MASONRY WALLS ARE INDICATED ON THE ARCHITECTURAL DRAWINGS AND MUST BE REINFORCED WITH #4 AT 48" ON-CENTER VERTICAL WALL REINFORCEMENT.
14. REFER TO THE PARTITION TYPES ON THE ARCHITECTURAL DRAWINGS FOR CONCRETE MASONRY WALLS THAT MUST BE GROUTED SOLID.

STRUCTURAL STEEL NOTES:

1. STRUCTURAL STEEL HAS BEEN DESIGNED IN ACCORDANCE WITH THE FOURTEENTH EDITION OF THE AMERICAN INSTITUTE OF STEEL CONSTRUCTION (AISC 360-10) "STEEL CONSTRUCTION MANUAL" - ALLOWABLE STRENGTH DESIGN.
2. STRUCTURAL STEEL MUST COMPLY WITH THE FOLLOWING SPECIFICATIONS:
   A. RECTANGULAR AND SQUARE HSS - ASTM A500, GRADE C, Fy=50 KSI
   B. HEADED STUDS - ASTM A 108, GRADES 1015 THROUGH 1020, TYPE B, Fu=65 KSI
   C. ALL OTHER STRUCTURAL STEEL SHAPES, PLATES AND BARS - ASTM A36, Fy=36 KSI (UNLESS OTHERWISE NOTED)
3. WELDING MUST BE IN ACCORDANCE WITH AWS D1.1, "STRUCTURAL WELDING CODE - STEEL". WELD ELECTRODES MUST BE E70XX. CONTINUOUS 1/4" FILLET WELDS ARE REQUIRED UNLESS OTHERWISE NOTED.
4. SEE THE ARCHITECTURAL, CIVIL, MECHANICAL, PLUMBING AND ELECTRICAL DRAWINGS FOR ADDITIONAL STEEL (IF ANY) NOT SHOWN ON THE STRUCTURAL DRAWINGS.
5. UNLESS OTHERWISE NOTED, THE TOP OF ALL STEEL COLUMNS MUST HAVE A STEEL CAP PLATE. UNLESS OTHERWISE DETAILED OR NOTED, MINIMUM CAP PLATE DIMENSIONS MUST MATCH COLUMN WIDTH AND DEPTH AND MINIMUM THICKNESS OF CAP PLATE MUST EQUAL COLUMN WEB THICKNESS (1/2" MINIMUM).
6. STRUCTURAL STEEL NOTED TO BE GALVANIZED MUST CONFORM TO ASTM A123 OR ASTM A153. GALVANIZE STRUCTURAL STEEL AFTER FABRICATION WHERE PRACTICAL. REPAIR DAMAGED GALVANIZED COATING USING ASTM A780 ZINC-RICH PAINT.

STEEL JOIST NOTES:

1. STEEL JOISTS MUST CONFORM TO THE LATEST EDITION OF THE STEEL JOIST INSTITUTE (SJI) STANDARD SPECIFICATIONS.
2. PREPARE AND SUBMIT FOR REVIEW SHOP DRAWINGS SHOWING THE LAYOUT OF JOIST MEMBERS, SPECIAL CONNECTIONS, JOINING AND ACCESSORIES. INCLUDE MARK, NUMBER, TYPE, LOCATION AND SPACING OF JOISTS AND BRIDGING.
3. THE JOIST MANUFACTURER MUST BE RESPONSIBLE FOR CONTINUOUS JOIST BRIDGING LINES SATISFYING THE REQUIREMENTS OF THE SJI SPECIFICATION FOR THE TOP AND BOTTOM CHORDS OF ALL STEEL JOISTS, AS WELL AS ANY ADDITIONAL BRIDGING/BRACING SHOWN OR REQUIRED FOR JOISTS SUBJECTED TO NET UPLIFT OR OTHER SPECIAL LOADS. ALL REQUIRED JOIST BRIDGING MUST BE CLEARLY INDICATED ON THE SHOP DRAWINGS. CROSS-BRIDGING IS REQUIRED AT CHANGES OF JOIST DEPTHS AND ENDS OF ALL BRIDGING LINES, UNLESS SUCH ENDS ARE PROPERLY ANCHORED INTO INTERSECTING INTERIOR OR END WALLS. ALL BRIDGING AND BRIDGING ANCHORS MUST BE COMPLETELY INSTALLED BEFORE PLACING OF ANY CONSTRUCTION LOADS ON THE JOISTS.
4. ROOF JOISTS MUST BE DESIGNED FOR A NET UPLIFT LOAD OF 56 PSF. ONE-THIRD STRESS INCREASE NOT PERMITTED FOR LOAD COMBINATIONS INVOLVING WIND PER IBC SECTION 1605.3.1.1.
5. ALL JOISTS ARE SPECIAL JOISTS AND THE JOIST MANUFACTURER MUST SUBMIT SIGNED AND SIGNED CALCULATIONS FOR DESIGN OF JOIST. IN ADDITION TO STEEL JOIST INSTITUTE (SJI) DESIGN CRITERIA, ALL JOIST MUST BE DESIGNED FOR THE FOLLOWING LOAD CRITERIA:
   A. UNIFORM LOAD INDICATED BY STEEL JOIST INSTITUTE (SJI) DESIGNATION.
   B. A LOAD COMBINATION OF TOTAL UNIFORM LOAD AND A SEISMIC AXIAL LOAD OF 1,600 POUNDS.

STEEL DECK NOTES:

1. STEEL DECK MUST CONFORM TO THE LATEST EDITION OF THE AMERICAN IRON AND STEEL INSTITUTE (AISI), "SPECIFICATION FOR THE DESIGN OF COLD-FORMED STEEL STRUCTURAL MEMBERS" AND THE STEEL DECK INSTITUTE (SDI), "DESIGN MANUAL FOR COMPOSITE DECKS, FORM DECKS, AND ROOF DECKS."
2. STEEL DECK UNITS MUST COMPLY WITH THE FOLLOWING:
   A. 1 1/2" ROOF DECK MUST BE 20 GAGE GALVANIZED TYPE B RIB DECK SPANNING PERPENDICULAR TO SUPPORTS UNLESS OTHERWISE NOTED. ATTACH DECK TO STRUCTURAL STEEL SUPPORTS WITH 5/8" DIAMETER PUDDLE WELDS AT EVERY RIB, INCLUDING RIBS WHERE SIDELAPS OCCUR. FASTEN ADJACENT DECK UNITS WITH #10 SELF-TAPPING HEX HEAD SCREWS AT 1/3 POINTS BETWEEN SUPPORTS ALONG SIDELAPS AND FASTEN EDGEMOST DECK PANEL TO STEEL FRAMING WITH 5/8" DIAMETER PUDDLE WELDS AT SAME SPACING AS SIDELAP FASTENERS.
3. WELDING MUST BE IN ACCORDANCE WITH AWS D1.3 "STRUCTURAL WELDING CODE - SHEET STEEL". FIELD WELDS MUST BE WIRE BRUSHED AND PRIMED PAINTED IN ACCORDANCE WITH THE SPECIFICATIONS.
4. PERMANENT SUSPENDED LOADS SUCH AS SUSPENDED CEILINGS, LIGHT FIXTURES, DUCTS, OR OTHER UTILITIES MUST NOT BE SUPPORTED BY STEEL ROOF DECK.
5. DURING STEEL DECK ERECTION AND ROOFING OPERATIONS DISTRIBUTE CONSTRUCTION LOADS TO PREVENT DAMAGE TO DECK. CONCENTRATED CONSTRUCTION LOADS OF 200 POUNDS OR LESS DISTRIBUTED OVER A 1'-0" WIDE SECTION OF DECK MUST NOT REQUIRE ANY FURTHER DISTRIBUTION. USE WORKING PLATFORMS FOR CONCENTRATED CONSTRUCTION LOADS OF OVER 200 POUNDS, SUCH THAT THE RESULTING UNIFORM CONSTRUCTION LOAD ON THE DECK DOES NOT EXCEED 50 PSF.
6. PREPARE AND SUBMIT SHOP DRAWINGS FOR REVIEW SHOWING THE LAYOUT AND TYPES OF DECK UNITS, ANCHORAGE DETAILS AND CONDITIONS REQUIRING CLOSURE STRIPS, SUPPLEMENTARY FRAMING AND OTHER ACCESSORIES.
7. TOUCH-UP ALL SCARRED, ABRADED AND RUST AREAS IN STEEL DECK IN ACCORDANCE WITH THE SPECIFICATIONS.

COLD-FORMED METAL FRAMING NOTES:

1. COLD-FORMED METAL FRAMING MUST BE DESIGNED IN ACCORDANCE WITH THE AMERICAN IRON AND STEEL INSTITUTE (AISI) "COLD-FORMED STEEL DESIGN MANUAL". THE CONTRACTOR MUST SUBMIT SHOP DRAWINGS PREPARED BY A REGISTERED PROFESSIONAL ENGINEER FOR THE DESIGN OF COLD-FORMED METAL FRAMING, INCLUDING DESIGN LOADINGS AND REACTIONS APPLIED TO THE SUPPORTING STRUCTURE.
2. COLD-FORMED METAL FRAMING (SIZES/GAGES) AND CONNECTIONS INDICATED ON DRAWINGS ARE FOR PRICING PURPOSES ONLY. COLD-FORMED ENGINEER MUST DESIGN AND DETAIL MEMBERS AND THEIR CONNECTIONS.
3. COLD-FORMED METAL FRAMING MEMBERS MUST BE FORMED OF CORROSION-RESISTANT STEEL CONFORMING TO ASTM A653 WITH A MINIMUM YIELD STRENGTH OF 33 KSI FOR TRACKS AND RUNNERS AND 33 KSI (50 KSI FOR 54 MILS 16 GAGE AND HEAVIER) FOR ALL OTHER MEMBERS.
4. WELDING MUST BE IN ACCORDANCE WITH AWS D1.3, "STRUCTURAL WELDING CODE - SHEET STEEL".
5. COLD-FORMED METAL FRAMING MEMBER SIZES AND GAGES INDICATED ARE IN ACCORDANCE WITH THE STEEL STUD MANUFACTURERS ASSOCIATION (SSMA) NOMENCLATURE.
6. COLD-FORMED METAL FRAMING MEMBERS MUST BE DESIGNED FOR THE LOADS GIVEN IN THE GENERAL NOTES. THE DESIGN LOADS ARE UNFACTORED SERVICE LOADS (ALL APPLICABLE FACTORS MUST BE APPLIED).
7. MAXIMUM LATERAL DEFLECTION OF COLD-FORMED FRAMING MEMBERS MUST BE DETERMINED BY THE FOLLOWING TABLE:

STUD USE	L/y RATIO (LIMIT)
BACKING UP METAL PANEL	L/360 (MANUF. RECOMMENDATION)

8. COLD-FORMED METAL FRAMING MEMBERS MUST BE DESIGNED FOR ALL FRAMING CONDITIONS FOUND IN THE STRUCTURE, INCLUDING WALLS, CORNERS, HEADERS, AND JAMBS. SOME CONDITIONS MAY REQUIRE MODIFICATION OF COLD-FORMED FRAMING MEMBERS (SUCH AS NOTCHING OR REVISING SIZES) OR MULTIPLE STUDS TO SUPPORT INCREASED LOADS. IT IS THE RESPONSIBILITY OF THE CONTRACTOR TO COORDINATE ALL CONDITIONS AND DETAILS.
9. CROSS BRIDGING OR FULL-DEPTH BLOCKING IS REQUIRED AT AND ROOF RAFTERS NOT RECEIVING CEILING SHEATHING AND AT WALL STUDS NOT RECEIVING SHEATHING ON BOTH FACES. UNLESS OTHERWISE INDICATED, CROSS BRIDGING MUST BE SIMPSON TB (OR EQUIVALENT); MAXIMUM BRIDGING/BLOCKING SPACING MUST BE 8'-0" ON-CENTER OR AT 1/3 POINTS OF MEMBER SPAN, WHICHEVER IS LESS. COORDINATE EXTENTS OF WALL AND CEILING SHEATHING WITH THE ARCHITECTURAL DRAWINGS.
10. COLD-FORMED METAL FRAMING CONNECTIONS TO THE STRUCTURE MUST BE DESIGNED FOR ALL FRAMING CONDITIONS. CONNECTIONS ARE SCHEMATICALLY SHOWN ON THE STRUCTURAL DRAWINGS. IT IS THE RESPONSIBILITY OF THE CONTRACTOR TO COORDINATE ALL CONNECTION CONDITIONS AND LOCATIONS.

POST-INSTALLED ANCHOR NOTES:

1. POST-INSTALLED ANCHORS MUST BE CAPABLE OF WITHSTANDING DESIGN LOADS INDICATED ON THE DRAWINGS. APPLICABLE POST-INSTALLED ANCHOR TYPE(S) ARE AS FOLLOWS:
   A. ANCHORAGE TO CRACKED AND/OR UNCRACKED CONCRETE:
      1. ADHESIVE ANCHORS OR MECHANICAL ANCHORS, AS INDICATED.
   B. REBAR DOWELING INTO CRACKED AND/OR UNCRACKED CONCRETE:
      1. ADHESIVE ANCHORS
   C. ANCHORAGE TO SOLID GROUTED MASONRY:
      1. ADHESIVE ANCHORS AS INDICATED
2. ANCHOR CAPACITY MUST BE BASED ON TECHNICAL DATA PUBLISHED BY THE ANCHOR MANUFACTURER OR SUCH OTHER METHOD AS APPROVED BY THE STRUCTURAL ENGINEER OF RECORD. CONTRACTOR MUST PROVIDE CALCULATIONS DEMONSTRATING THE CHOSEN ANCHOR IS CAPABLE OF ACHIEVING THE PERFORMANCE VALUES INDICATED. PRODUCTS SUBMITTED WILL BE EVALUATED BY SHOWING ICC ESR COMPLIANCE WITH THE RELEVANT BUILDING CODE FOR SEISMIC USES, LOAD RESISTANCE, INSTALLATION CATEGORY AND AVAILABILITY OF COMPREHENSIVE INSTALLATION INSTRUCTIONS. ADHESIVE ANCHOR EVALUATION WILL ALSO CONSIDER CREEP, IN-SERVICE TEMPERATURE AND INSTALLATION TEMPERATURE.
3. INSTALL ANCHORS PER THE MANUFACTURER INSTRUCTIONS INCLUDED IN ANCHOR PACKAGING.
4. OVERHEAD ADHESIVE ANCHORS MUST BE INSTALLED USING A PROPERLY TESTED AND APPROVED INSTALLATION METHOD.
5. THE CONTRACTOR MUST ARRANGE A REPRESENTATIVE OF THE ANCHOR MANUFACTURER TO PROVIDE ONSITE INSTALLATION TRAINING FOR ALL ANCHORING PRODUCTS. THE STRUCTURAL ENGINEER OF RECORD MUST RECEIVE DOCUMENTED CONFIRMATION THAT ALL OF THE CONTRACTOR'S PERSONNEL WHO INSTALL ANCHORS ARE TRAINED PRIOR TO THE COMMENCEMENT OF INSTALLING ANCHORS.
6. ANCHOR CAPACITY IS DEPENDENT UPON SPACING BETWEEN ADJACENT ANCHORS AND PROXIMITY OF ANCHORS TO EDGE OF CONCRETE. INSTALL ANCHORS IN ACCORDANCE WITH SPACING AND EDGE CLEARANCES INDICATED ON THE DRAWINGS.
7. EXISTING REINFORCING BARS IN THE CONCRETE STRUCTURE MAY CONFLICT WITH SPECIFIC ANCHOR LOCATIONS. UNLESS OTHERWISE NOTED, THE REINFORCING BARS CANNOT BE CUT. THE CONTRACTOR MUST REVIEW THE EXISTING STRUCTURAL DRAWINGS AND MUST LOCATE THE POSITION OF THE REINFORCING BARS AT THE LOCATIONS OF THE CONCRETE ANCHORS BY GPR X-RAY, CHIPPING OR OTHER MEANS.

NOTE:
IF THIS DRAWING IS LESS THAN 34" X 22"
IT IS A REDUCED SIZE DRAWING

SPEIGHT·MARSHALL·FRANCIS
STRUCTURAL ENGINEERS
1228 PERIMETER PARKWAY, SUITE 201
VIRGINIA BEACH, VIRGINIA 23454
P: 757.427.1020
7814 CAROUSEL LANE SUITE 200
RICHMOND, VIRGINIA 23294
P: 804.464.4111
WWW.SMANDF.CO
SM&F Job No: 20.009-B

SYM	DESCRIPTION	DATE	APPR
	MOD P00006 AND MOD P00007	10/2025	
	MOD P00005	05/2023	

COMMONWEALTH OF VIRGINIA
EARL H. INGE, JR.
Lic. No. 035522
1/13/2023
PROFESSIONAL ENGINEER

BAMFORTH ENGINEERS + SURVEYORS
A/E INFO

APPROVED
FOR COMMANDER NAVFAC 11/21/2025
ACTIVITY Approved by J. Scott Roberts, Asset Management Branch Head & Supervisory Facility Planner, PWD Beaufort, SC via email.
SATISFACTORY TO DATE 12/15/2022

DES	EHI
DRW	JSC
CHK	DWS
PM/DM	KTB / RLH
BRANCH MANAGER	NEK
CHIEF ENG/ARCH	EJA
FP ENGINEER	DSN

DEPARTMENT OF THE NAVY
NAVAL FACILITIES ENGINEERING SYSTEMS COMMAND
NAVAL FACILITIES ENGINEERING SYSTEMS COMMAND ~ MID-ATLANTIC
NORFOLK, VA
DC CORE
MCAS BEAUFORT BEAUFORT, SC
P-475 AIRCRAFT MAINTENANCE HANGAR - VOLUME 4 (PARKING GARAGE OPTION)
STRUCTURAL NOTES

SCALE:	12" = 1'-0"
EPROJECT NO.:	1363603
CONSTR. CONTR. NO.	
NAVFAC DRAWING NO.	12860286
SHEET	1065 OF 1412

PS002

CAST-IN-PLACE CONCRETE REINFORCING BAR LAP SPLICE SCHEDULE

BAR SIZE Fy = 60 KSI	TENSION BARS																COMPRESSION BARS
	f'c = 3,000 PSI				f'c = 3,500 PSI				f'c = 4,000 PSI				f'c = 5,000 PSI				f'c = ALL
	REGULAR CLASS		TOP CLASS		REGULAR CLASS		TOP CLASS		REGULAR CLASS		TOP CLASS		REGULAR CLASS		TOP CLASS		
	A	B	A	B	A	B	A	B	A	B	A	B	A	B	A	B	
#3	17"	22"	22"	28"	16"	21"	21"	26"	15"	19"	19"	25"	13"	17"	17"	22"	12"
#4	22"	29"	29"	38"	21"	27"	27"	36"	19"	25"	25"	33"	17"	23"	23"	29"	15"
#5	28"	36"	36"	47"	26"	34"	34"	44"	24"	31"	31"	41"	22"	28"	28"	36"	19"
#6	33"	43"	43"	56"	31"	40"	40"	52"	29"	37"	37"	49"	26"	34"	34"	44"	23"
#7	48"	63"	63"	81"	45"	59"	59"	75"	42"	54"	54"	71"	38"	49"	49"	63"	27"
#8	55"	72"	72"	93"	51"	67"	67"	87"	48"	62"	62"	81"	43"	56"	56"	72"	30"
#9	62"	81"	81"	105"	58"	75"	75"	98"	54"	70"	70"	91"	48"	63"	63"	81"	34"
#10	70"	91"	91"	118"	65"	85"	85"	110"	61"	79"	79"	102"	54"	71"	71"	92"	39"
#11	78"	101"	101"	131"	73"	94"	94"	122"	67"	87"	87"	114"	60"	78"	78"	102"	43"

CAST-IN-PLACE CONCRETE REINFORCING BAR LAP SPLICE SCHEDULE NOTES
(THESE NOTES MUST BE USED FOR ALL SPLICES UNLESS NOTED OTHERWISE ON DRAWINGS):

1. TOP BARS ARE HORIZONTAL BARS, SPLICED SO THAT 12" OR MORE OF FRESH CONCRETE IS CAST IN THE MEMBER BELOW THE REINFORCING BAR.
2. CLASS A SPLICES MAY BE USED ONLY WHEN 50% OR LESS OF THE BARS ARE SPLICED WITHIN THE LAP SPLICE LENGTH.
3. CLASS B SPLICES MUST BE USED FOR ALL SPLICES IN SLABS, BEAMS, JOISTS, WALLS, MOMENT RESISTING COLUMNS, AND JAMB COLUMNS, UNLESS THEY MEET THE REQUIREMENTS OF NOTE #2 ABOVE.
4. TIES AND STIRRUPS MUST NOT BE SPLICED UNLESS APPROVED BY THE ENGINEER OF RECORD. ROUND COLUMN TIES MAY BE SPLICED USING CLASS A LAPS.
5. FOR ALL LIGHTWEIGHT CONCRETE, LAP LENGTHS MUST BE MULTIPLIED BY 1.3.
6. THE BAR LAP SPLICE LENGTHS MUST BE MULTIPLIED BY 1.5 WHEN EITHER OF THE FOLLOWING IS TRUE:
   A. CLEAR SPACING OF BARS BEING DEVELOPED IS LESS THAN ONE BAR DIAMETER, CLEAR COVER IS LESS THAN ONE BAR DIAMETER AND STIRRUPS OR TIES ALONG THE LENGTH OF THE SPLICE ARE LESS THAN THE CODE MINIMUM.
   B. CLEAR SPACING OF BARS BEING DEVELOPED IS LESS THAN 2 BAR DIAMETERS AND CLEAR COVER IS LESS THAN ONE BAR DIAMETER.

STRUCTURAL ABBREVIATION LIST:

±	PLUS/MINUS	LLH	LONG LEG HORIZONTAL
Ø	DIAMETER	LLO	LONG LEG OUTSTANDING
CL	CENTERLINE	LLV	LONG LEG VERTICAL
o/c	ON CENTER	LSH	LONG SIDE HORIZONTAL
		LSV	LONG SIDE VERTICAL
A.B.	ANCHOR BOLT		
AESS	ARCHITECTURALLY EXPOSED STRUCTURAL STEEL	M.O.S.	MIDDLE OF SLAB
		M.O.W.	MIDDLE OF WALL
ACI	AMERICAN CONCRETE INSTITUTE	MANUF.	MANUFACTURER or MANUFACTURER'S
AISC	AMERICAN INSTITUTE OF STEEL CONSTRUCTION	MAS.	MASONRY
A.R.	ANCHOR ROD	MATL.	MATERIAL
ASTM	AMERICAN SOCIETY FOR TESTING AND MATERIALS	MAX.	MAXIMUM
		MECH.	MECHANICAL
ADJ.	ADJACENT	MIN.	MINIMUM
ARCH.	ARCHITECT or ARCHITECTURAL		
		N.T.S.	NOT TO SCALE
B.	BOTTOM		
B.E.J.	BUILDING EXPANSION JOINT	OSB	ORIENTED STRAND BOARD
B.D.	BAR DIAMETER	OPP.	OPPOSITE
BLDG.	BUILDING		
BRCG.	BRACING	P/T	POST-TENSIONED
BRDG.	BRIDGING	PAF	POWDER ACTUATED FASTENER
BRG.	BEARING	P.C.	PRECAST
BTWN.	BETWEEN	PEB	PRE-ENGINEERED BUILDING
		PLF	POUNDS PER LINEAR FOOT
C.G.	CENTER OF GRAVITY	P.S.	PRE-STRESSED
C.I.P.	CAST IN PLACE	PSF	POUNDS PER SQUARE FOOT
C.J.P.	COMPLETE JOINT PENETRATION	PSI	POUNDS PER SQUARE INCH
CANT.	CANTILEVER	P.T.	PRESSURE TREATED
CMU	CONCRETE MASONRY UNIT	PLUMB.	PLUMBING
COL.	COLUMN	PROJ.	PROJECTION
CONC.	CONCRETE		
CONN.	CONNECT or CONNECTION	R.	RADIUS
CONT.	CONTINUOUS	REF.	REFERENCE
COORD.	COORDINATE	REINF.	REINFORCED or REINFORCING
		REQD.	REQUIRED
DBL.	DOUBLE	REV.	REVISION
DET.	DETAIL		
DIA.	DIAMETER	SLO	SHORT LEG OUTSTANDING
DIAG.	DIAGONAL	S.D.I.	STEEL DECK INSTITUTE
DWG.	DRAWING	S.E.J.	SEISMIC EXPANSION JOINT
		S.J.I.	STEEL JOIST INSTITUTE
E.F.	EACH FACE	S.O.G.	SLAB-ON-GRADE
E.O.	EDGE OF	S.F.	STEPPED FOOTING
E.W.	EACH WAY	SFRS	SEISMIC FORCE RESISTING SYSTEM
EL.	ELEVATION		
ELEC.	ELECTRICAL	SCHED.	SCHEDULE
ELEV.	ELEVATOR or ELEVATION	SECT.	SECTION
EMB.	EMBED or EMBEDMENT	SIM.	SIMILAR
ENG.	ENGINEER	S.I.R.D.A.	SLOPED INTEGRAL ROOF DECK ASSEMBLY
EQUIV.	EQUIVALENT		
EXIST.	EXISTING	STD.	STANDARD
EXP.	EXPANSION	STIFF.	STIFFENER
		STIR.	STIRRUP
F.L.	FULL LENGTH	STRUCT.	STRUCTURAL
F.O.	FACE OF	SQ.	SQUARE
F.R.	FIRST RISER		
FIN.	FINISH or FINISHED	T.O.S.	TOP OF STEEL
FTG.	FOOTING	TEMP.	TEMPERATURE
		TYP.	TYPICAL
G.C.	GENERAL CONTRACTOR		
GALV.	GALVANIZED	U.O.N.	UNLESS OTHERWISE NOTED
H.C.	HOLLOW CORE	VERT.	VERTICAL
HORIZ.	HORIZONTAL		
		W.P.	WORKING POINT
J.B.E.	JOIST BEARING ELEVATION	W.W.R.	WELDED WIRE REINFORCEMENT
K.S.F.	KIPS PER SQUARE FOOT		
K.S.I.	KIPS PER SQUARE INCH		

COMPONENTS AND CLADDING DESIGN PRESSURES (PSF)						
ROOF ZONE	TRIBUTARY AREA (SQ. FT.)					
	10		50		250	
1	+21.0	-50.0	+17.0	-47.0	+16.0	-46.0
2	+46.0	-84.0	+41.0	-63.0	+37.0	-54.0
3	+46.0	-84.0	+41.0	-63.0	+37.0	-54.0
WALL ZONE	TRIBUTARY AREA (SQ. FT.)					
	10		50		250	
4	+46.0	-50.0	+41.0	-45.0	+37.0	-41.0
5	+46.0	-61.0	+41.0	-52.0	+37.0	-44.0

NOTES:
1. PLUS AND MINUS SIGNS SIGNIFY PRESSURES ACTING TOWARD OR AWAY FROM THE SURFACES, RESPECTIVELY.
2. WIDTH OF COEFFICIENT PRESSURE ZONE, a = 14 FEET. SEE 'COMPONENT AND CLADDING LEGEND' ON THIS SHEET FOR LOCATIONS.
3. ALL WIND PRESSURES ARE ULTIMATE LOADS. FOR SERVICE LOAD PRESSURES, MULTIPLY THE ABOVE VALUES BY 0.6 PER ASCE 7-16.

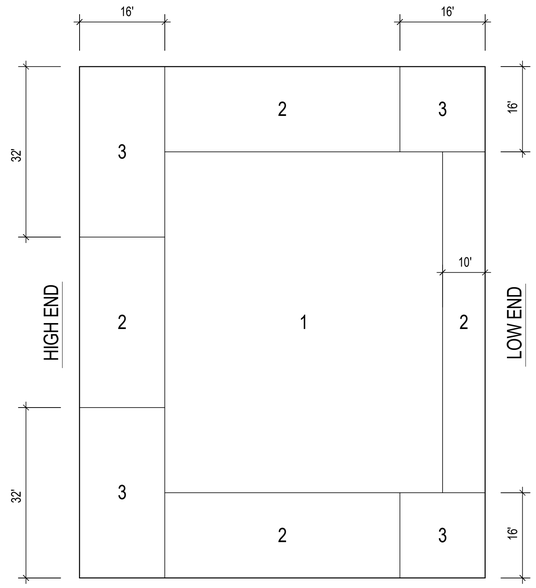

TYPICAL UNIT PLAN

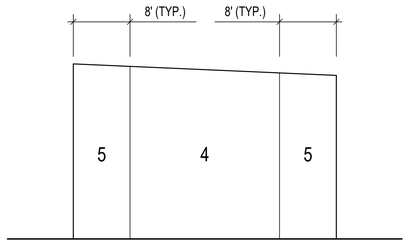

TYPICAL SIDE WALL

COMPONENT AND CLADDING LEGEND

SPEIGHT·MARSHALL·FRANCIS
STRUCTURAL ENGINEERS
1228 PERIMETER PARKWAY, SUITE 201
VIRGINIA BEACH, VIRGINIA 23454
P: 757.427.1020
7814 CAROUSEL LANE SUITE 200
RICHMOND, VIRGINIA 23294
P: 804.464.4111
WWW.SMANDF.CO
SMAF Job No: 20.009-B

NOTE:
IF THIS DRAWING IS LESS THAN 34" X 22"
IT IS A REDUCED SIZE DRAWING

APPR	DATE	DESCRIPTION	STM
	10/2025	MOD P00006 AND MOD P00007	
	05/2023	MOD P00005	

NAVFAC

COMMONWEALTH OF VIRGINIA
EARL H. INGE, JR.
Lic. No. 035522
1/13/2023
PROFESSIONAL ENGINEER

BAMFORTH
ENGINEERS + SURVEYORS
AE INFO

APPROVED
FOR COMMANDER NAVFAC

ACTIVITY
Approved by J. Scott Roberts,
Asset Management Branch Head &
Supervisory Facility Planner, PWD
Beaufort, SC via email.

SATISFACTORY TO DATE 12/15/2022

DES	EHI	DRW	JSC	CHK	DWS
PM/DM					KTB / RLH
BRANCH MANAGER					NEK
CHIEF ENG/ARCH					EJA
FP ENGINEER					DSN

DEPARTMENT OF THE NAVY
NAVAL FACILITIES ENGINEERING SYSTEMS COMMAND
DC CORE
NAVAL FACILITIES ENGINEERING SYSTEMS COMMAND ~ MID-ATLANTIC
NORFOLK, VA
MCAS BEAUFORT
BEAUFORT, SC
P-475 AIRCRAFT MAINTENANCE HANGAR - VOLUME 4 (PARKING GARAGE OPTION)
STRUCTURAL NOTES AND ABBREVIATIONS

SCALE:	12" = 1'-0"
EPROJECT NO.:	1363603
CONSTR. CONTR. NO.	
NAVFAC DRAWING NO.	12860287
SHEET	1066 OF 1412

PS003

DRAWFORM REVISION: 25 AUGUST 2020

Autodesk Docs://2042 VAFAT 1302 P3A Maintenance Hangar/PRNO.P475.1363603.S.rvt
11/11/2025 11:32:42 AM

GENERAL FOUNDATION AND GROUND FLOOR SLAB PLAN NOTES :

A. SEE THE CIVIL DRAWINGS FOR ACTUAL FINISHED FLOOR ELEVATION AND FINISHED GRADES. TOP OF SLAB VARIES (SEE SHEET PSB105). TOP OF SLAB EQUALS FINISHED FLOOR ELEVATION AND MUST SERVE AS THE REFERENCE ELEVATION 0'-0".

B. FOR THE STRUCTURAL NOTES AND ABBREVIATIONS SEE SHEETS PS001, PS002 AND PS003.

C. FOR DIMENSIONS NOT SHOWN SEE THE DIMENSION PLAN ON SHEET PSB102 AND THE ARCHITECTURAL DRAWINGS.

D. TOP OF ALL PILES CAPS AND GRADE BEAMS MUST BE AS INDICATED ON PLAN.

E. PILE CAP AND GRADE BEAM CENTERLINES MUST COINCIDE WITH COLUMN CENTERLINES, UNLESS OTHERWISE NOTED.

F. COORDINATE TOP OF CAST-IN-PLACE CONCRETE RAMP SLAB ELEVATION WITH THE PRECAST DRAWINGS AND ELEVATIONS.

G. SEE SHEETS PSB106 AND PSB107 FOR INFORMATION REGARDING PRECAST LOADS AND ADDITIONAL INFORMATION REGARDING OUR ASSUMPTIONS FOR THE PRECAST CONCRETE SYSTEM.

H. PRECAST CONCRETE ELEMENTS SHOWN THUS ON PLAN ( ).

J. CAST-IN-PLACE CONCRETE ELEMENTS SHOWN THUS ON PLAN ( ).

K. ALL UTILITIES (PIPES, CONDUITS, ETC.) BENEATH THE SLAB MUST BE STRUCTURALLY SUPPORTED BY THE STRUCTURAL SLAB. SEE THE PLUMBING, MECHANICAL AND ELECTRICAL DRAWINGS FOR THE APPROPRIATE MEANS OF ATTACHMENT.

X FOUNDATION AND GROUND FLOOR SLAB PLAN KEY NOTES :

1. GROUND FLOOR MUST BE A 8" THICK STRUCTURAL SLAB-ON-GRADE, REINFORCED AS SHOWN ON PLAN, OVER 15 MIL. VAPOR RETARDER MINIMUM OVER 4" DEPTH OF POROUS FILL.
2. GROUND FLOOR MUST BE A 8" THICK STRUCTURAL SLAB-ON-GRADE, REINFORCED AS SHOWN ON PLAN, OVER 4" DEPTH OF POROUS FILL.
3. REGION OF SLAB SURFACE WARP AND DIRECTION FROM HIGH POINT TO LOW POINT. MAINTAIN SPECIFIED SLAB THICKNESS THROUGHOUT WARP REGION.
4. EXISTING CREOSOTE TREATED TIMBER PILES TO REMAIN. CUT PILES OFF AT ELEVATION REQUIRED TO CLEAR BOTTOM OF SLABS AND FOUNDATIONS BY 2'-0". DISPOSE OF PILE CUT OFFS AS SPECIFIED.
5. TRENCH DRAIN - SEE THE PLUMBING AND ARCHITECTURAL DRAWINGS FOR ADDITIONAL INFORMATION.
6. DOWELED STRUCTURAL SLAB-ON-GRADE EXPANSION JOINT - SEE RELEVANT FOUNDATION SECTION.
7. CONDUCT STATIC LOAD TEST ON PILE IN ADDITION TO PDA TESTING.
8. EXISTING GEOTHERMAL WELLS TO REMAIN. COORDINATE PILE LOCATIONS WITH LOCATIONS OF WELLS. CUT WELLS OFF AT ELEVATION REQUIRED TO CLEAR BOTTOM OF SLAB AND FOUNDATIONS BY 2'-0". DISPOSE OF WELL CUT OFF AS REQUIRED.

FOUNDATION AND GROUND FLOOR SLAB PLAN LEGEND :

GB-X = GRADE BEAM MARK - SEE SCHEDULE AND TYPICAL DETAIL ON SHEET PSB502

P-X = PILE CAP MARK - SEE TYPICAL DETAILS ON SHEET PSB501

PCX = PILE CAP IDENTIFICATION NUMBER - FOR REFERENCE ONLY

SF = STEPPED FOUNDATION - SEE TYPICAL DETAIL ON SHEET PSB502

(X.X) = TOP OF PILE CAP / GRADE BEAM ELEVATION - MEASURED FROM REFERENCE ELEVATION 0'-0"

= PILE

= TEST PILE LOCATION

TP-X = TEST PILE NUMBER

P-X^{T} = "T" SUFFIX ON PILE CAP MARK INDICATES TENSION PILE CAP

X = COLUMN GRID MARK

= SANITARY OR STORM SEWER PIPING BELOW SLAB - COORDINATE WITH THE PLUMBING DRAWINGS (PIPING PARTIALLY SHOWN) SEE THE PLUMBING DRAWINGS FOR ADDITIONAL PIPING NOT SHOWN

<X'-X"> = TOP OF CONCRETE WALL ELEVATION - MEASURED FROM REFERENCE ELEVATION 0'-0"

FOUNDATION AND GROUND FLOOR SLAB PLAN LEGEND :

0'-0" = BUILDING FINISHED FLOOR ELEVATION

X'-X" = TOP OF SLAB ELEVATION

FD FD = FLOOR DRAIN - COORDINATE WITH THE ARCHITECTURAL AND PLUMBING DRAWINGS

SLOPE = DIRECTION OF SLAB SLOPE

= CHANGE IN SLAB SLOPE - SEE THE ARCHITECTURAL DRAWINGS FOR EXACT LOCATION

= EXTENT OF SLAB SLOPE - SEE THE ARCHITECTURAL DRAWINGS FOR EXACT LOCATION

RL = RAIN LEADER - SEE THE ARCHITECTURAL DRAWINGS

= SLAB-ON-GRADE WARP LINE

X = COLUMN GRID MARK

F/R = FIRST RISER - SEE THE ARCHITECTURAL DRAWINGS FOR DETAILS AND EXACT LOCATION

XX.X = APPROXIMATE ACTUAL FINISHED GRADE ELEVATION - FOR GRADING SEE THE CIVIL DRAWINGS

APPR	DATE	DESCRIPTION	SYM
	10/2025	MOD P00006 AND MOD P00007	
	05/2023	MOD P00005	

NAVFAC

COMMONWEALTH OF VIRGINIA
EARL H. INGE, JR.
Lic. No. 035522
1/13/2023
PROFESSIONAL ENGINEER

BAMFORTH ENGINEERS + SURVEYORS

AE INFO

APPROVED

FOR COMMANDER NAVFAC

ACTIVITY
Approved by J. Scott Roberts,
Asset Management Branch Head &
Supervisory Facility Planner, PWD
Beaufort, SC via email.

SATISFACTORY TO DATE 12/15/2022

DES	EHI	DRW	JSC	CHK	DWS
PM/DM					KTB / RLH
BRANCH MANAGER					NEK
CHIEF ENG/ARCH					EJA
FP ENGINEER					DSN

DEPARTMENT OF THE NAVY
NAVAL FACILITIES ENGINEERING SYSTEMS COMMAND
DC CORE

NAVAL FACILITIES ENGINEERING SYSTEMS COMMAND ~ MID-ATLANTIC
NORFOLK, VA

MCAS BEAUFORT
BEAUFORT, SC

P-475 AIRCRAFT MAINTENANCE HANGAR - VOLUME 4 (PARKING GARAGE OPTION)

FOUNDATION AND GROUND FLOOR SLAB PLAN NOTES AND LEGENDS

SCALE:	12" = 1'-0"
EPROJECT NO.:	1363603
CONSTR. CONTR. NO.	
NAVFAC DRAWING NO.	12860288
SHEET	1067 OF 1412

PSB100

DRAWFORM REVISION: 25 AUGUST 2020

SPEIGHT·MARSHALL·FRANCIS
STRUCTURAL ENGINEERS
1228 PERIMETER PARKWAY, SUITE 201
VIRGINIA BEACH, VIRGINIA 23454
P: 757.427.1020
7814 CAROUSEL LANE SUITE 200
RICHMOND, VIRGINIA 23294
P: 804.464.4111
WWW.SMANDF.CO
SMAF Job No: 20.009-B

NOTE:
IF THIS DRAWING IS LESS THAN 34" X 22"
IT IS A REDUCED SIZE DRAWING

Autodesk Docs://2042 VAFAT 100 P3A Maintenance Hangar/PROJ PATS 1363603.rvt
11/11/2025 11:24:42 AM

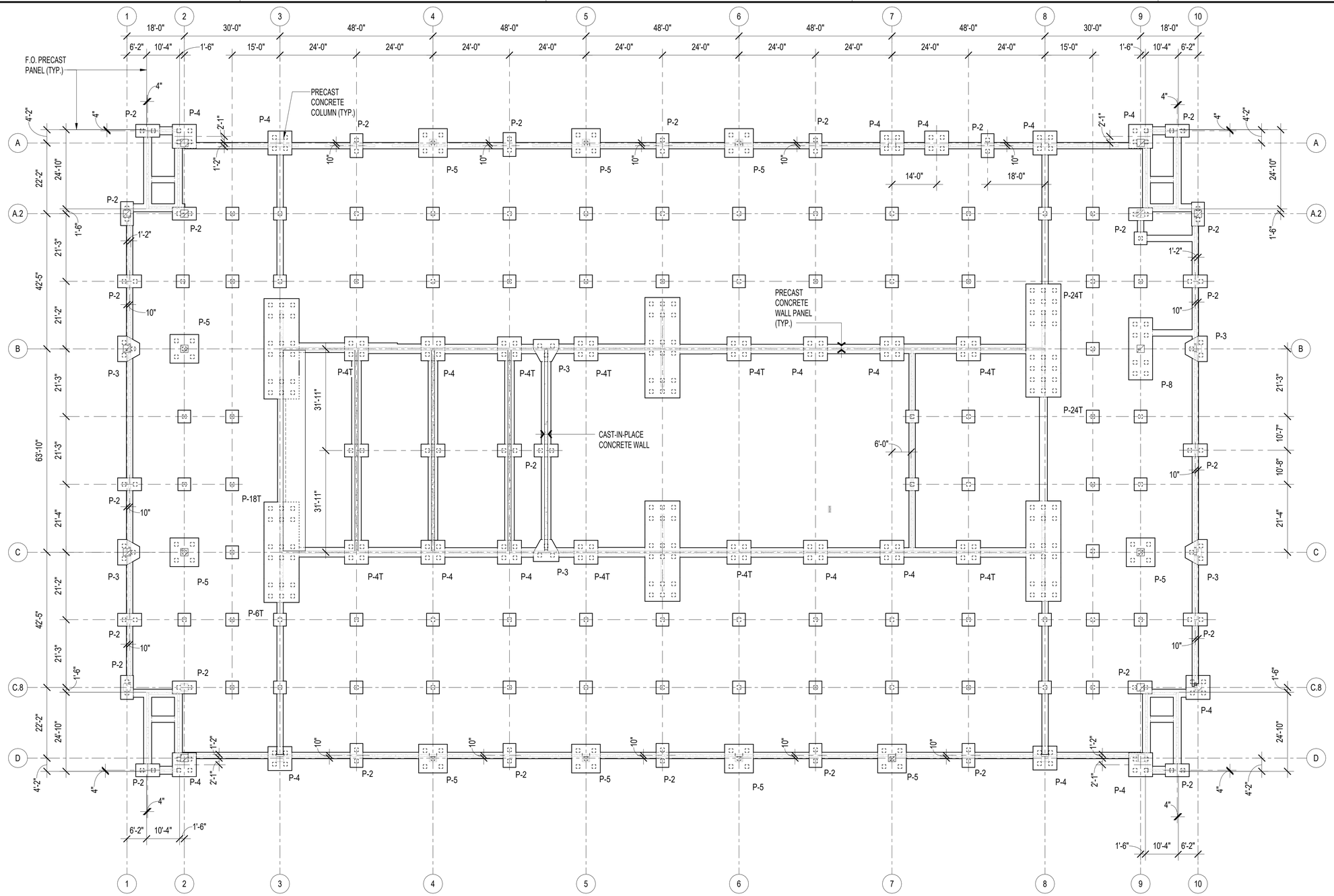

NOTE:
THE PURPOSE OF THE DRAWING IS TO PROVIDE DIMENSIONS LOCATING THE PILE CAPS, GRADE BEAMS AND OTHER PERTINENT ITEMS TO PLACE THE FOUNDATION. SEE SHEETS PSB103, PSB104 AND PSB105 FOR ADDITIONAL INFORMATION.

PLAN NORTH N

0 10' 20' 40' 60'
1/16" = 1'-0" GRAPHIC SCALE

NOTE:
IF THIS DRAWING IS LESS THAN 34" X 22"
IT IS A REDUCED SIZE DRAWING

FOUNDATION DIMENSION PLAN

1/16" = 1'-0" (FOR PLAN NOTES AND LEGEND SEE SHEET PSB100)

SPEIGHT·MARSHALL·FRANCIS
STRUCTURAL ENGINEERS
1228 PERIMETER PARKWAY, SUITE 201
VIRGINIA BEACH, VIRGINIA 23454
P: 757.427.1020
7814 CAROUSEL LANE SUITE 200
RICHMOND, VIRGINIA 23294
P: 804.464.4111
SMAF Job No: 20.009-B
WWW.SMANDF.CO

APPR	DATE	DESCRIPTION
	10/2025	MOD P00006 AND MOD P00007
	05/2023	MOD P00005

NAVFAC

COMMONWEALTH OF VIRGINIA
EARL H. INGE, JR.
Lic. No. 035522
1/13/2023
PROFESSIONAL ENGINEER

BAMFORTH ENGINEERS + SURVEYORS

APPROVED
FOR COMMANDER NAVFAC
ACTIVITY: Approved by J. Scott Roberts, Asset Management Branch Head & Supervisory Facility Planner, PWD Beaufort, SC via email.
SATISFACTORY TO DATE 12/15/2022

DES	EHI	DRW	JSC	CHK	DWS
PM/DM	KTB / RLH				
BRANCH MANAGER	NEK				
CHIEF ENG/ARCH	EJA				
FP ENGINEER	DSN				

DEPARTMENT OF THE NAVY
NAVAL FACILITIES ENGINEERING SYSTEMS COMMAND
DC CORE
MCAS BEAUFORT

NAVAL FACILITIES ENGINEERING SYSTEMS COMMAND ~ MID-ATLANTIC
NORFOLK, VA

BEAUFORT, SC
P-475 AIRCRAFT MAINTENANCE HANGAR - VOLUME 4 (PARKING GARAGE OPTION)

FOUNDATION DIMENSION PLAN

SCALE:	1/16" = 1'-0"
EPROJECT NO.:	1363603
CONSTR. CONTR. NO.	
NAVFAC DRAWING NO.	12860289
SHEET	1068 OF 1412

PSB101

DRAWFORM REVISION: 25 AUGUST 2020

Autodesk Docs://2042 NAVFAC SW P-475 Maintenance Hangar-PROJ.PATS.15938003-S.rvt
11/11/2025 11:12:41 AM

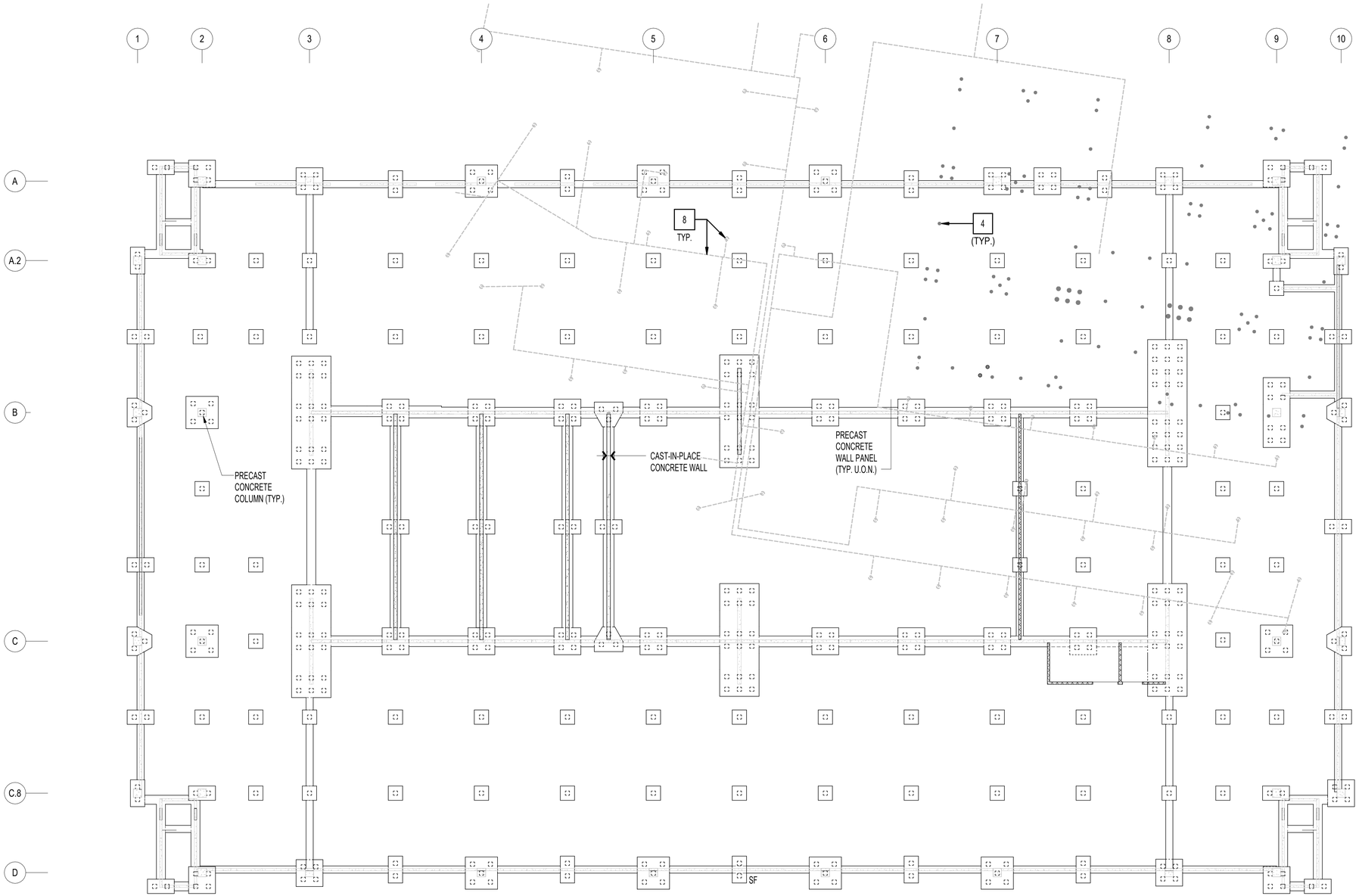

FOUNDATION PILE PLAN

1/16" = 1'-0" (FOR PLAN NOTES AND LEGEND SEE SHEET PSB100)

NOTE:
THE PURPOSE OF THIS DRAWING IS TO SHOW THE RELATIONSHIP OF EXISTING PILES AND GEOTHERMAL WELLS TO NEW PILES. THIS DRAWING IS FOR REFERENCE ONLY.
BASE BID ON THIS REFERENCED SHEET TO DETERMINE WHICH EXISTING PILES MUST BE CUT AND FOR MATERIAL QUANTITY OF PILE LENGTH TO BE REMOVED, BASE BID ON TOP OF PILE ELEVATION OF 2'-6" BELOW EXISTING FINIAHED FLOOR ELEVATION. FOR EFFORT AND LABOR TO CUT THE PILES AND SURVEY THE PILES, BASE BID ON TOP OF PILE ELEVATION OF 5'-6" BELOW EXISTING BUILDING FINISHED FLOOR ELEVATION. SEE CIVIL DRAWINGS FOR EXISTING BUILDING FINISH FLOOR ELEVATION.

PLAN NORTH N

0 10' 20' 40' 60'
1/16" = 1'-0" GRAPHIC SCALE

NOTE:
IF THIS DRAWING IS LESS THAN 34" X 22"
IT IS A REDUCED SIZE DRAWING

SPEIGHT·MARSHALL·FRANCIS
STRUCTURAL ENGINEERS
1228 PERIMETER PARKWAY, SUITE 201
VIRGINIA BEACH, VIRGINIA 23454
P: 757.427.1020
7814 CAROUSEL LANE SUITE 200
RICHMOND, VIRGINIA 23294
P: 804.464.4111
SMAF Job No: 20.009-B
WWW.SMANDF.CO

APPR	DATE	DESCRIPTION	MK
	10/2025	MOD P00006 AND MOD P00007	
	05/2023	MOD P00005	

NAVFAC

COMMONWEALTH OF VIRGINIA
EARL H. INGE, JR.
Lic. No. 035522
1/13/2023
PROFESSIONAL ENGINEER

BAMFORTH
ENGINEERS + SURVEYORS

AE INFO

APPROVED
FOR COMMANDER NAVFAC

ACTIVITY
Approved by J. Scott Roberts,
Asset Management Branch Head &
Supervisory Facility Planner, PWD
Beaufort, SC via email.

SATISFACTORY TO DATE	12/15/2022
DES EHI / DRW JSC / CHK DWS	
PM/DM	KTB / RLH
BRANCH MANAGER	NEK
CHIEF ENG/ARCH	EJA
FP ENGINEER	DSN

DEPARTMENT OF THE NAVY
NAVAL FACILITIES ENGINEERING SYSTEMS COMMAND
DC CORE

NAVAL FACILITIES ENGINEERING SYSTEMS COMMAND ~ MID-ATLANTIC
NORFOLK, VA

MCAS BEAUFORT
BEAUFORT, SC
P-475 AIRCRAFT MAINTENANCE HANGAR -
VOLUME 4 (PARKING GARAGE OPTION)

FOUNDATION PILE PLAN

SCALE:	1/16" = 1'-0"
EPROJECT NO.:	1363603
CONSTR. CONTR. NO.	
NAVFAC DRAWING NO.	12860290
SHEET	1069 OF 1412

PSB102

DRAWFORM REVISION: 25 AUGUST 2020

Autodesk Docs://2024] VAFAT 502 F25 Maintenance Hangar-PRNG Part1 13636O3-S.rvt
11/11/2025 11:24:4 AM

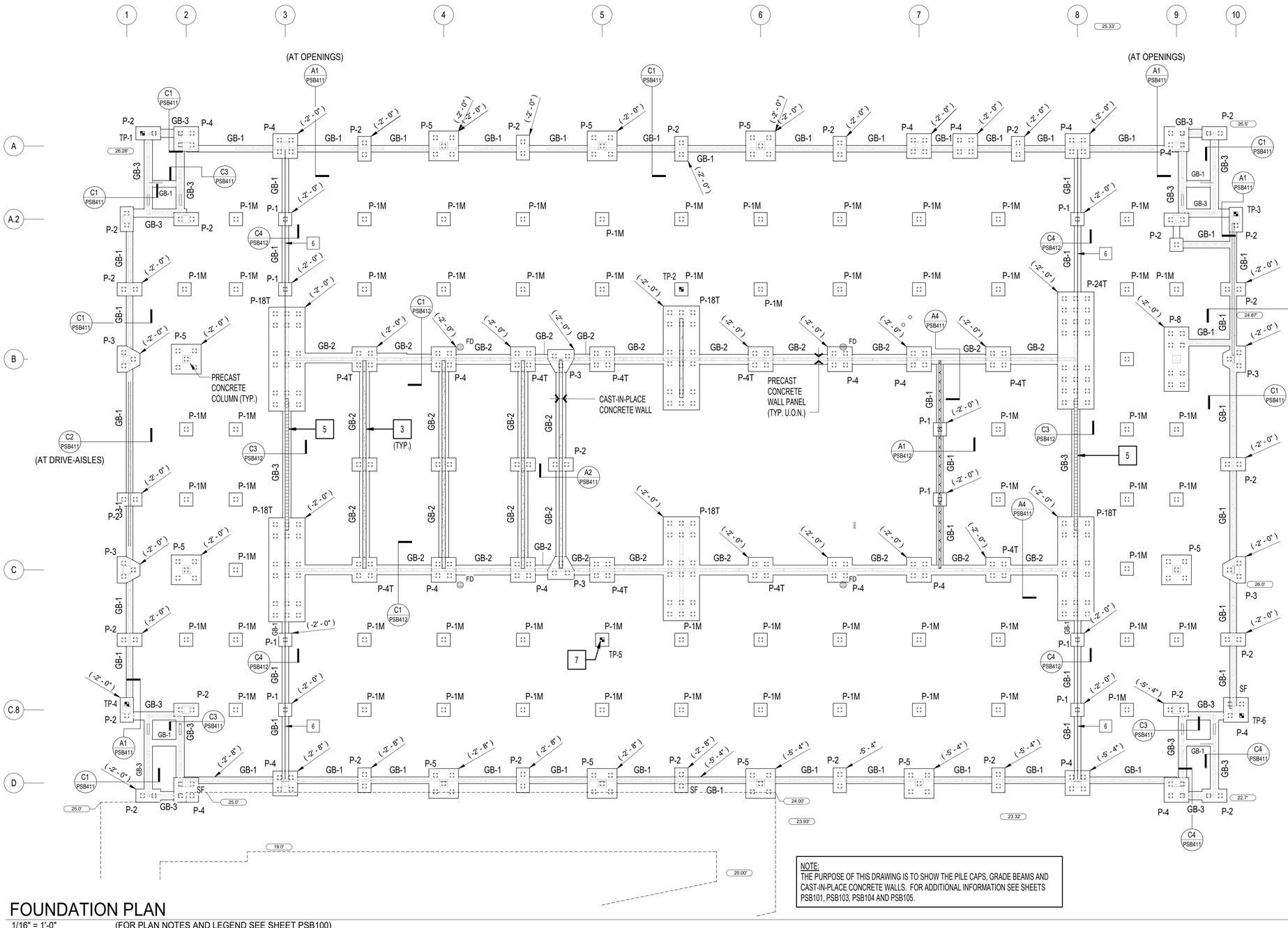

FOUNDATION PLAN

1/16" = 1'-0" (FOR PLAN NOTES AND LEGEND SEE SHEET PSB100)

NOTE:
THE PURPOSE OF THIS DRAWING IS TO SHOW THE PILE CAPS, GRADE BEAMS AND CAST-IN-PLACE CONCRETE WALLS. FOR ADDITIONAL INFORMATION SEE SHEETS PSB101, PSB103, PSB104 AND PSB105.

ALL UTILITIES (PIPES, CONDUITS, ETC.) BENEATH THE SLAB MUST BE STRUCTURALLY SUPPORTED BY THE STRUCTURAL SLAB. SEE THE PLUMBING, MECHANICAL AND ELECTRICAL DRAWINGS FOR THE APPROPRIATE MEANS OF ATTACHMENT.

PLAN NORTH

0 10' 20' 40' 60'
1/16" = 1'-0" GRAPHIC SCALE

NOTE:
IF THIS DRAWING IS LESS THAN 34" X 22"
IT IS A REDUCED SIZE DRAWING

SPEIGHT·MARSHALL·FRANCIS
STRUCTURAL ENGINEERS
1228 PERIMETER PARKWAY, SUITE 201
VIRGINIA BEACH, VIRGINIA 23454
P: 757.427.1020
7814 CAROUSEL LANE SUITE 200
RICHMOND, VIRGINIA 23294
P: 804.464.4111
SMAF Job No: 20.009-B
WWW.SMANDF.CO

APPR	DATE	DESCRIPTION	STM
	10/2025	MOD P00006 AND MOD P00007	
	05/2023	MOD P00005	

NAVFAC

COMMONWEALTH OF VIRGINIA
EARL H. INGE, JR.
Lic. No. 035522
1/13/2023
PROFESSIONAL ENGINEER

BAMFORTH
ENGINEERS + SURVEYORS

A/E INFO

APPROVED
FOR COMMANDER NAVFAC
ACTIVITY: Approved by J. Scott Roberts, Asset Management Branch Head & Supervisory Facility Planner, PWD Beaufort, SC via email.
SATISFACTORY TO DATE 12/15/2022

DES	EHI	DRW	JSC	CHK	DWS
PM/DM					KTB / RLH
BRANCH MANAGER					NEK
CHIEF ENG/ARCH					EJA
FP ENGINEER					DSN

DEPARTMENT OF THE NAVY
NAVAL FACILITIES ENGINEERING SYSTEMS COMMAND
DC CORE
NAVAL FACILITIES ENGINEERING SYSTEMS COMMAND ~ MID-ATLANTIC
NORFOLK, VA
MCAS BEAUFORT
BEAUFORT, SC
P-475 AIRCRAFT MAINTENANCE HANGAR - VOLUME 4 (PARKING GARAGE OPTION)
FOUNDATION PLAN

SCALE:	1/16" = 1'-0"
EPROJECT NO.:	1363603
CONSTR. CONTR. NO.	
NAVFAC DRAWING NO.	12860291
SHEET	1070 OF 1412

PSB103

DRAWFORM REVISION: 25 AUGUST 2020

Autodesk Docs://2024] VAFAT 502 F75 Maintenance Hangar/PRNG FAT1 13S3603-S.rvt
11/11/2025 11:32:43 AM

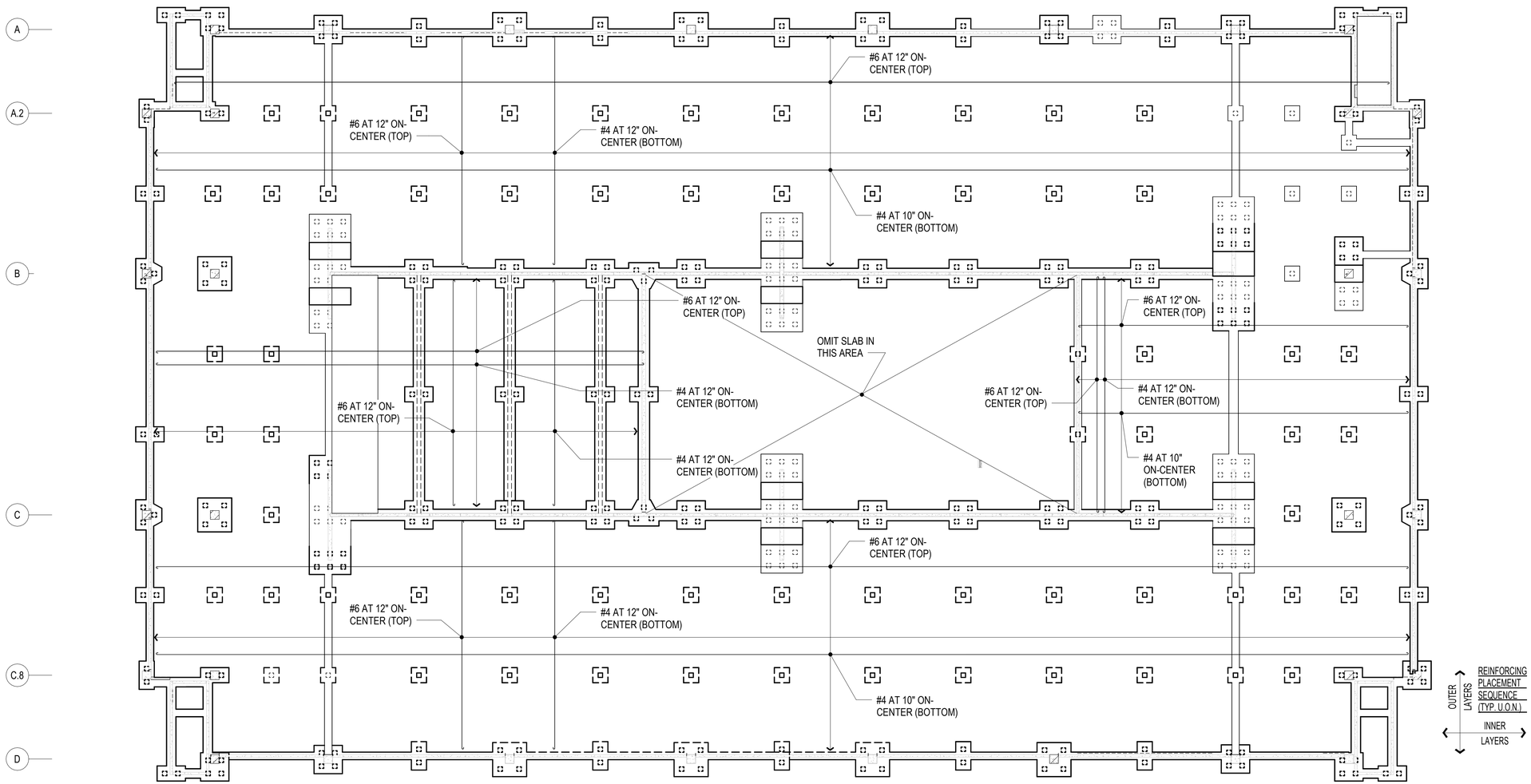

NOTE:
THE PURPOSE OF THIS DRAWING IS TO SHOW THE SLAB REINFORCING REQUIREMENTS. FOR ADDITIONAL INFORMATION SEE SHEETS PSB101, PSB103 AND PSB105.

GROUND FLOOR SLAB REINFORCEMENT PLAN

1/16" = 1'-0" (FOR PLAN NOTES AND LEGEND SEE SHEET PSB101)

PLAN NORTH

0 10' 20' 40' 60'

1/16" = 1'-0" GRAPHIC SCALE

NOTE:
IF THIS DRAWING IS LESS THAN 34" X 22"
IT IS A REDUCED SIZE DRAWING

SPEIGHT·MARSHALL·FRANCIS
STRUCTURAL ENGINEERS
1228 PERIMETER PARKWAY, SUITE 201
VIRGINIA BEACH, VIRGINIA 23454
P: 757.427.1020
7814 CAROUSEL LANE SUITE 200
RICHMOND, VIRGINIA 23294
P: 804.464.4111
SMF Job No: 20.009-B
WWW.SMANDF.CO

APPR	DATE	DESCRIPTION	MK
	10/2025	MOD P00006 AND MOD P00007	
	05/2023	MOD P00005	

NAVFAC

COMMONWEALTH OF VIRGINIA
EARL H. INGE, JR.
Lic. No. 035522
1/13/2023
PROFESSIONAL ENGINEER

BAMFORTH ENGINEERS + SURVEYORS

AE INFO

APPROVED
FOR COMMANDER NAVFAC

ACTIVITY
Approved by J. Scott Roberts, Asset Management Branch Head & Supervisory Facility Planner, PWD Beaufort, SC via email.

SATISFACTORY TO DATE	12/15/2022
DES EHI / DRW JSC / CHK DWS	
PM/DM	KTB / RLH
BRANCH MANAGER	NEK
CHIEF ENG/ARCH	EJA
FP ENGINEER	DSN

DEPARTMENT OF THE NAVY
NAVAL FACILITIES ENGINEERING SYSTEMS COMMAND
DC CORE
NAVAL FACILITIES ENGINEERING SYSTEMS COMMAND – MID-ATLANTIC
NORFOLK, VA
MCAS BEAUFORT
BEAUFORT, SC
P-475 AIRCRAFT MAINTENANCE HANGAR - VOLUME 4 (PARKING GARAGE OPTION)
GROUND FLOOR SLAB REINFORCEMENT PLAN

SCALE:	1/16" = 1'-0"
EPROJECT NO.:	1363603
CONSTR. CONTR. NO.	
NAVFAC DRAWING NO.	12860292
SHEET	1071 OF 1412

PSB104

DRAWFORM REVISION: 25 AUGUST 2020

Autodesk Docs://20042 MAFAT 520 F35 Maintenance Hangar/FINO1-FAT1-1363603-S.rvt
11/11/2025 11:12:43 AM

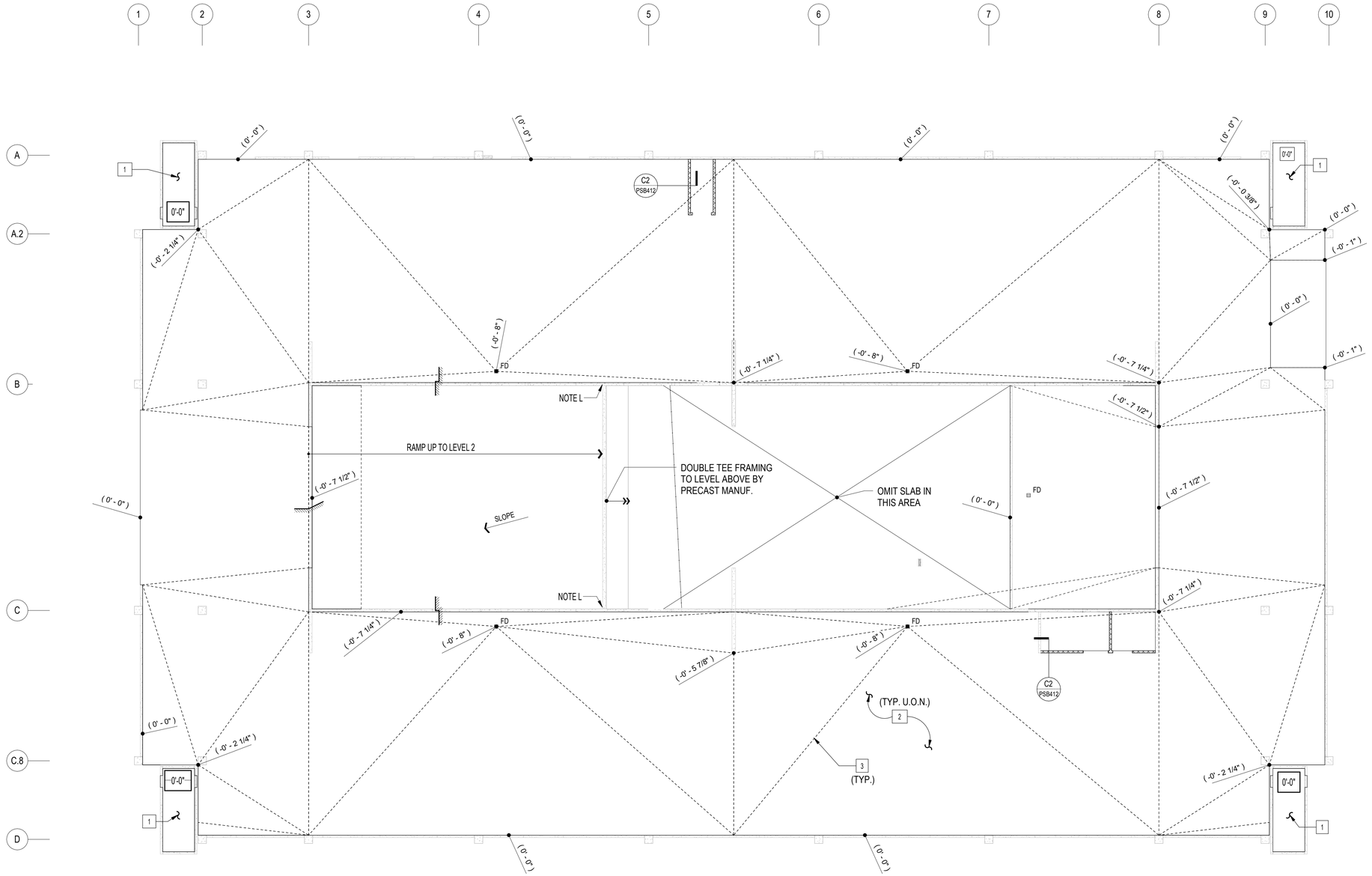

NOTE:
THE PURPOSE OF THIS DRAWING IS FOR THE DESIGN AND CONSTRUCTION OF THE CONCRETE SLAB-ON-GRADE AT THE GROUND LEVEL. THIS PLAN INDICATES THE LOCATION OF FLOOR DRAINS, SLOPES AND SLAB ELEVATIONS. THIS DRAWING MUST BE USED IN CONJUNCTION WITH SHEET PSB104. FOR ADDITIONAL INFORMATION SEE SHEETS PSB101, PSB102, PSB103 AND PSB104.

GROUND FLOOR SLAB ELEVATIONS PLAN

1/16" = 1'-0" (FOR PLAN NOTES AND LEGEND SEE SHEET PSB101)

PLAN NORTH

0 10' 20' 40' 60'
1/16" = 1'-0" GRAPHIC SCALE

NOTE:
IF THIS DRAWING IS LESS THAN 34" X 22"
IT IS A REDUCED SIZE DRAWING

SPEIGHT·MARSHALL·FRANCIS
STRUCTURAL ENGINEERS
1228 PERIMETER PARKWAY, SUITE 201
VIRGINIA BEACH, VIRGINIA 23454
P: 757.427.1020
7814 CAROUSEL LANE SUITE 200
RICHMOND, VIRGINIA 23294
P: 804.464.4111
SM&F Job No: 20.009-B
WWW.SMANDF.CO

SYM	DESCRIPTION	DATE	APPR
	MOD P00006 AND MOD P00007	10/2025	
	MOD P00005	05/2023	

NAVFAC

COMMONWEALTH OF VIRGINIA
EARL H. INGE, JR.
Lic. No. 035522
1/13/2023
PROFESSIONAL ENGINEER

BAMFORTH
ENGINEERS + SURVEYORS

AE INFO

APPROVED
FOR COMMANDER NAVFAC 11/21/2025

ACTIVITY
Approved by J. Scott Roberts, Asset Management Branch Head & Supervisory Facility Planner, PWD Beaufort, SC via email.

SATISFACTORY TO DATE	12/15/2022		
DES EHI	DRW JSC	CHK DWS	
PM/DM	KTB / RLH		
BRANCH MANAGER	NEK		
CHIEF ENG/ARCH	EJA		
FP ENGINEER	DSN		

DEPARTMENT OF THE NAVY
NAVAL FACILITIES ENGINEERING SYSTEMS COMMAND
NAVAL FACILITIES ENGINEERING SYSTEMS COMMAND ~ MID-ATLANTIC
NORFOLK, VA
DC CORE
MCAS BEAUFORT
BEAUFORT, SC
P-475 AIRCRAFT MAINTENANCE HANGAR - VOLUME 4 (PARKING GARAGE OPTION)
GROUND FLOOR SLAB PLAN

SCALE:	1/16" = 1'-0"
EPROJECT NO.:	1363603
CONSTR. CONTR. NO.	
NAVFAC DRAWING NO.	12860293
SHEET	1072 OF 1412

PSB105

DRAWFORM REVISION: 25 AUGUST 2020

GENERAL PRECAST LOAD PLAN NOTES :

A. FOR THE STRUCTURAL NOTES AND ABBREVIATIONS SEE SHEETS PS001, PS002 AND PS003.

B. FOR DIMENSIONS NOT SHOWN SEE THE DIMENSION PLAN ON SHEET PSB101 AND THE ARCHITECTURAL DRAWINGS.

C. SEE THE ARCHITECTURAL DRAWINGS FOR ADDITIONAL INFORMATION REGARDING THE PRECAST CONCRETE SYSTEM REQUIREMENTS.

D. WALLS NOT LABELED ARE ASSUMED TO BE NON-LOAD BEARING. FOUNDATIONS HAVE BEEN DESIGNED FOR THEIR ASSUMED SELF-WEIGHT ONLY.

E. LOADS SHOWN ON PLAN AND SCHEDULES ARE SCHEMATIC AND WERE CALCULATED BY SPEIGHT, MARSHALL AND FRANICS, P.C. SEE 'DRIVEN PILE NOTES' NOTE #11 ON SHEET PS001 FOR MORE INFORMATION.

PRECAST LOAD PLAN LEGEND :

- X = COLUMN GRID MARK
- ± = APPROXIMATE DIMENSION OR ELEVATION (FIELD VERIFY)
- = PRECAST CONCRETE COLUMN
- = PRECAST CONCRETE WALL PANEL
- P_{DL} = COLUMN DEAD LOAD (ASSUMED)
- P_{LL} = COLUMN LIVE LOAD (ASSUMED)
- KLF = KIPS PER LINEAR FEET
- M_{OT} = OVERTURNING MOMENT AT BASE
- W-X = PRECAST CONCRETE WALL NUMBER - SEE THE PRECAST CONCRETE WALL LOAD SCHEDULE ON THIS SHEET
- LW = PRECAST CONCRETE LITE WALL

PRECAST CONCRETE SHEARWALL LOAD SCHEDULE

MARK	DEAD LOAD (KLF)	LIVE LOAD (KLF)	SEISMIC MOMENT (FOOT·KIPS)	SEISMIC SHEAR (KIPS)	WIND MOMENT (FOOT·KIPS)	WIND SHEAR (KIPS)
W-1	0.55	0	0	0	0	0
W-2	25	5.8	2,720	560	988	180
W-3	8.4	2.1	7,675	375	3,390	155
W-4	14.6	1	0	0	0	0

SPEIGHT·MARSHALL·FRANCIS
STRUCTURAL ENGINEERS
1228 PERIMETER PARKWAY, SUITE 201
VIRGINIA BEACH, VIRGINIA 23454
P: 757.427.1020
7814 CAROUSEL LANE SUITE 200
RICHMOND, VIRGINIA 23294
P: 804.464.4111
SMAF Job No: 20.009-B
WWW.SMANDF.CO

NOTE:
IF THIS DRAWING IS LESS THAN 34" X 22"
IT IS A REDUCED SIZE DRAWING

SYM	DESCRIPTION	DATE	APPR
	MOD P00006 AND MOD P00007	10/2025	
	MOD P00005	05/2023	

NAVFAC

COMMONWEALTH OF VIRGINIA
EARL H. INGE, JR.
Lic. No. 035522
1/13/2023
PROFESSIONAL ENGINEER

BAMFORTH
ENGINEERS + SURVEYORS

AE INFO

APPROVED
FOR COMMANDER NAVFAC 11/21/2025

ACTIVITY
Approved by J. Scott Roberts,
Asset Management Branch Head &
Supervisory Facility Planner, PWD
Beaufort, SC via email.

SATISFACTORY TO DATE 12/15/2022

DES EHI | DRW JSC | CHK DWS
PM/DM KTB / RLH
BRANCH MANAGER NEK
CHIEF ENG/ARCH EJA
FP ENGINEER DSN

DEPARTMENT OF THE NAVY
NAVAL FACILITIES ENGINEERING SYSTEMS COMMAND
NAVAL FACILITIES ENGINEERING SYSTEMS COMMAND ~ MID-ATLANTIC
NORFOLK, VA
DC CORE
MCAS BEAUFORT
BEAUFORT, SC
P-475 AIRCRAFT MAINTENANCE HANGAR - VOLUME 4 (PARKING GARAGE OPTION)
PRECAST LOADING PLAN NOTES AND LEGEND

SCALE: As indicated
EPROJECT NO.: 1363603
CONSTR. CONTR. NO.
NAVFAC DRAWING NO. 12860294
SHEET 1073 OF 1412
PSB106

DRAWFORM REVISION: 25 AUGUST 2020

Autodesk Docs://2024Q1 VMFAT 502 F35 Maintenance Hangar/PRKG P475 1363603-S.rvt
11/11/2025 11:32:44 AM

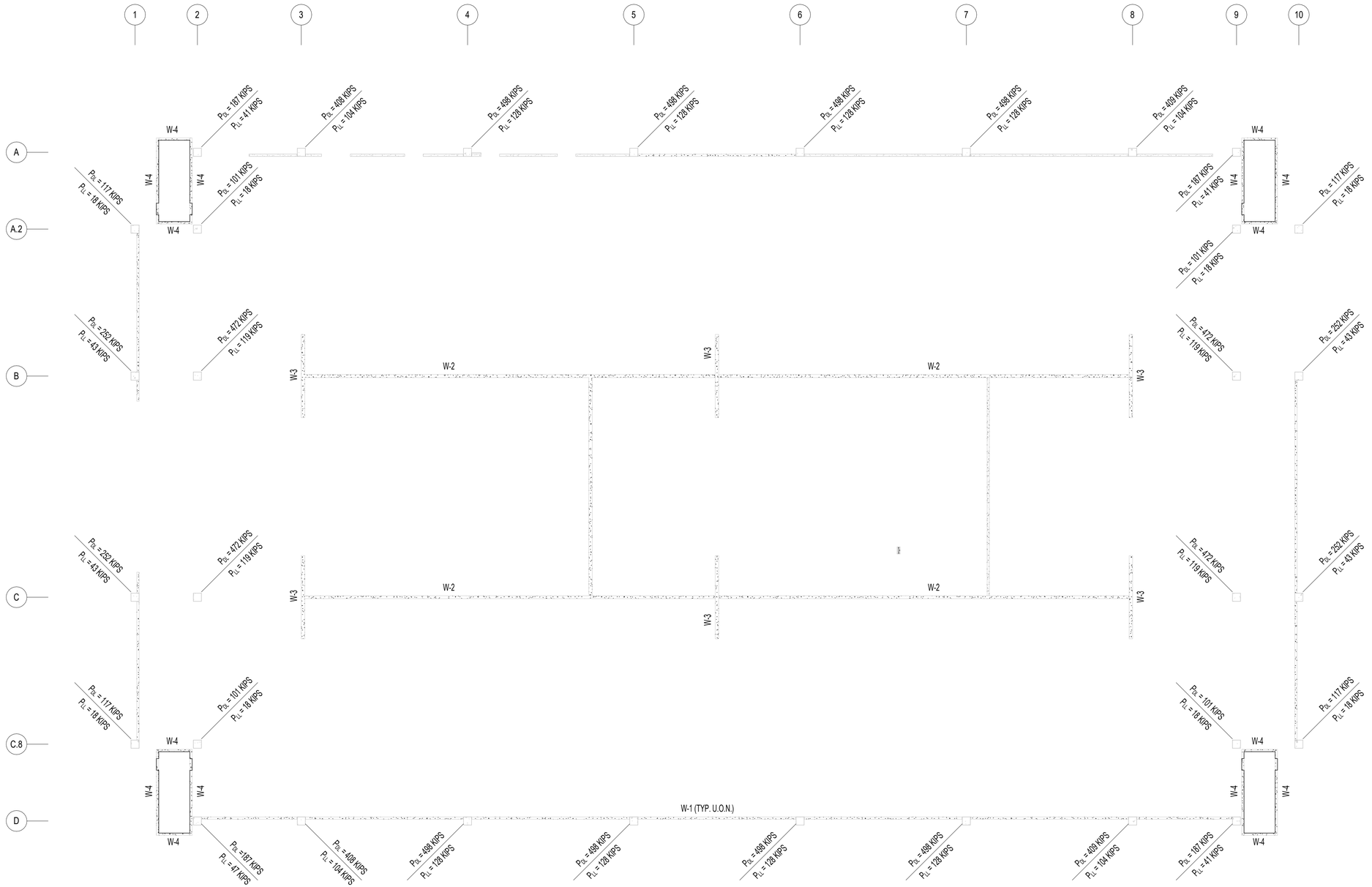

PRECAST LOADING PLAN

1/16" = 1'-0" (FOR PLAN NOTES AND LEGEND SEE SHEET PSB106)

PLAN NORTH

0 10' 20' 40' 60'

1/16" = 1'-0" GRAPHIC SCALE

NOTE:
IF THIS DRAWING IS LESS THAN 34" X 22"
IT IS A REDUCED SIZE DRAWING

SPEIGHT·MARSHALL·FRANCIS
STRUCTURAL ENGINEERS
1226 PERIMETER PARKWAY, SUITE 201
VIRGINIA BEACH, VIRGINIA 23454
P: 757.427.1020
7814 CAROUSEL LANE SUITE 200
RICHMOND, VIRGINIA 23294
P: 804.464.4111
WWW.SMANDF.CO
SMAF Job No: 20.009-B

APPR	DATE	DESCRIPTION	STM
	10/2025	MOD P00006 AND MOD P00007	
	05/2023	MOD P00005	

COMMONWEALTH OF VIRGINIA
EARL H. INGE, JR.
Lic. No. 035522
1/13/2023
PROFESSIONAL ENGINEER

BAMFORTH ENGINEERS + SURVEYORS

A/E INFO

APPROVED

FOR COMMANDER NAVFAC

ACTIVITY
Approved by J. Scott Roberts;
Asset Management Branch Head &
Supervisory Facility Planner, PWD
Beaufort, SC via email.

SATISFACTORY TO DATE	12/15/2022		
DES	EHI	DRW JSC	CHK DWS
PM/DM	KTB / RLH		
BRANCH MANAGER	NEK		
CHIEF ENG/ARCH	EJA		
FP ENGINEER	DSN		

DEPARTMENT OF THE NAVY
NAVAL FACILITIES ENGINEERING SYSTEMS COMMAND
DC CORE
NAVAL FACILITIES ENGINEERING SYSTEMS COMMAND – MID-ATLANTIC
NORFOLK, VA
MCAS BEAUFORT
BEAUFORT, SC
P-475 AIRCRAFT MAINTENANCE HANGAR - VOLUME 4 (PARKING GARAGE OPTION)
PRECAST LOADING PLAN

SCALE:	1/16" = 1'-0"
EPROJECT NO.:	1363603
CONSTR. CONTR. NO.	
NAVFAC DRAWING NO.	12860295
SHEET	1074 OF 1412

PSB107

DRAWFORM REVISION: 25 AUGUST 2020

Autodesk Docs://0042 MAFAT 026 P25 Maintenance Hangar/P25RG-FAPS 1363603-S.rvt
11/11/2025 11:32:45 AM

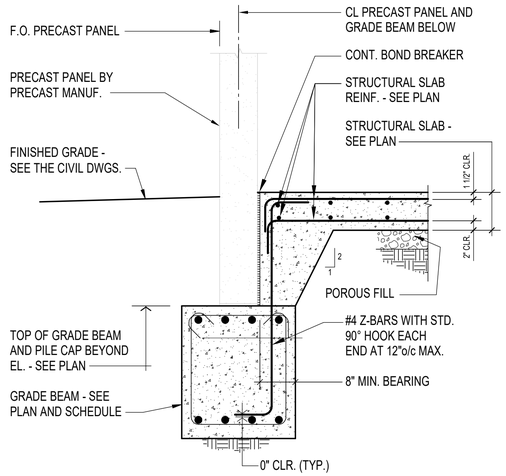

C1 SECTION
3/4" = 1'-0"

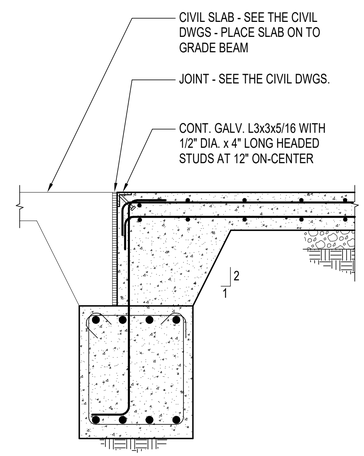

FOR DETAILS NOT NOTED SEE SECTION C1/PSB411

C2 SECTION
3/4" = 1'-0"

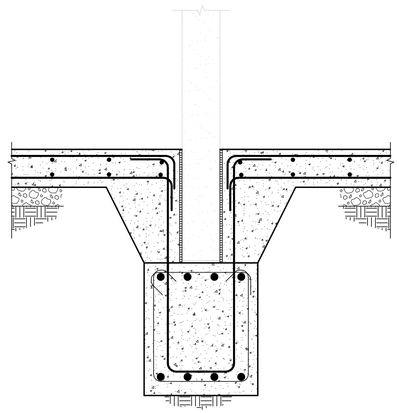

FOR DETAILS NOT NOTED SEE SECTION C1/PSB411

C3 SECTION
3/4" = 1'-0"

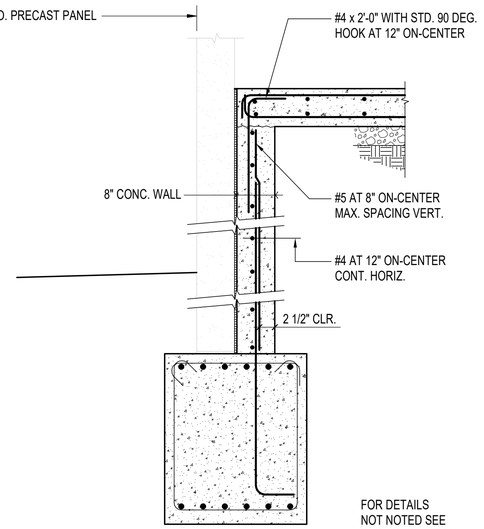

FOR DETAILS NOT NOTED SEE SECTION C1/PSB411

C4 SECTION
3/4" = 1'-0"

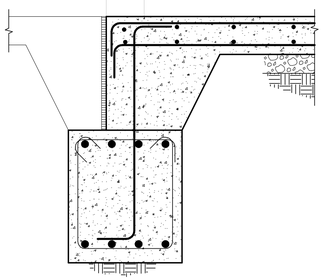

FOR DETAILS NOT NOTED SEE SECTION C3/PSB411

A1 SECTION
3/4" = 1'-0"

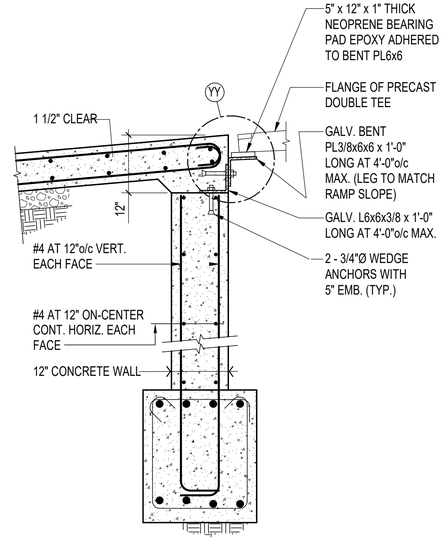

A2 SECTION
3/4" = 1'-0"

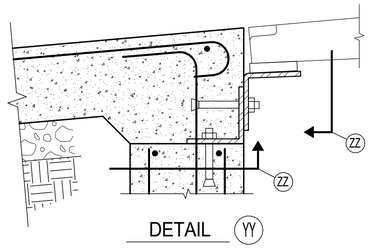

DETAIL YY

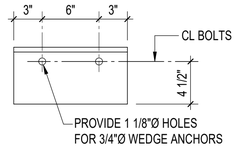

DETAIL ZZ

FOR DETAILS NOT NOTED SEE SECTION C1/PSB411

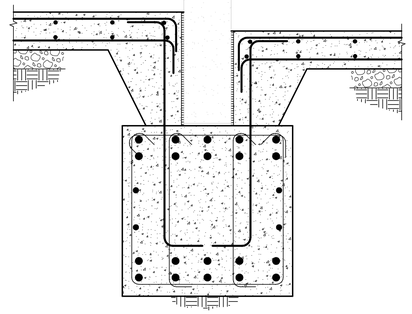

FOR DETAILS NOT NOTED SEE SECTION C1/PSB411

A4 SECTION
3/4" = 1'-0"

SPEIGHT·MARSHALL·FRANCIS
STRUCTURAL ENGINEERS
1228 PERIMETER PARKWAY, SUITE 201
VIRGINIA BEACH, VIRGINIA 23454
P: 757.427.1020
7814 CAROUSEL LANE SUITE 200
RICHMOND, VIRGINIA 23294
P: 804.464.4111
WWW.SMANDF.CO
SMAF Job No: 20.009-B

0 4" 1' 2' 3' 4' 5'
3/4" = 1'-0" GRAPHIC SCALE

NOTE:
IF THIS DRAWING IS LESS THAN 34" X 22"
IT IS A REDUCED SIZE DRAWING

APPR	DATE	STM	DESCRIPTION
	10/2025		MOD P00006 AND MOD P00007
	05/2023		MOD P00005

NAVFAC

COMMONWEALTH OF VIRGINIA
EARL H. INGE, JR.
Lic. No. 035522
1/13/2023
PROFESSIONAL ENGINEER

BAMFORTH
ENGINEERS + SURVEYORS

AE INFO

APPROVED

FOR COMMANDER NAVFAC

ACTIVITY
Approved by J. Scott Roberts,
Asset Management Branch Head &
Supervisory Facility Planner, PWD
Beaufort, SC via email.

SATISFACTORY TO DATE	12/15/2022
DES EHI / DRW JSC / CHK DWS	
PM/DM	KTB / RLH
BRANCH MANAGER	NEK
CHIEF ENG/ARCH	EJA
FP ENGINEER	DSN

DEPARTMENT OF THE NAVY
NAVAL FACILITIES ENGINEERING SYSTEMS COMMAND ~ MID-ATLANTIC
NORFOLK, VA
DC CORE
MCAS BEAUFORT
BEAUFORT, SC

P-475 AIRCRAFT MAINTENANCE HANGAR - VOLUME 4 (PARKING GARAGE OPTION)

FOUNDATION SECTIONS

SCALE:	3/4" = 1'-0"
EPROJECT NO.:	1363603
CONSTR. CONTR. NO.	
NAVFAC DRAWING NO.	12860296
SHEET	1075 OF 1412

PSB411

DRAWFORM REVISION: 25 AUGUST 2020

Autodesk Docs://2024] VAFAT 130 P19 Maintenance Hangar-P19(C) P475 1363603-S.rvt
11/11/2025 11:29:45 AM

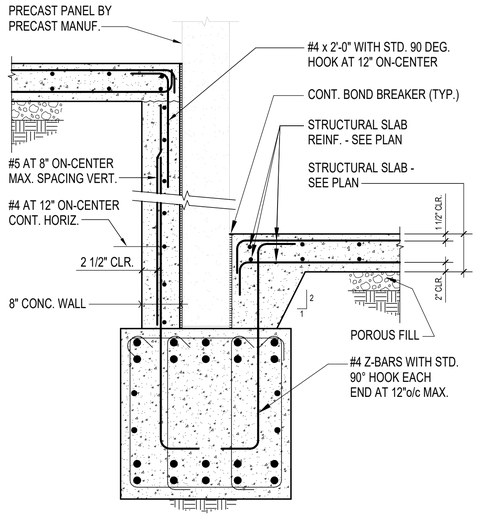

C1 SECTION
3/4" = 1'-0"

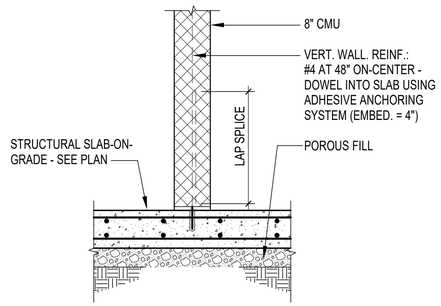

C2 SECTION
3/4" = 1'-0"

FOR DETAILS NOT NOTED SEE SECTION C1/PSB412

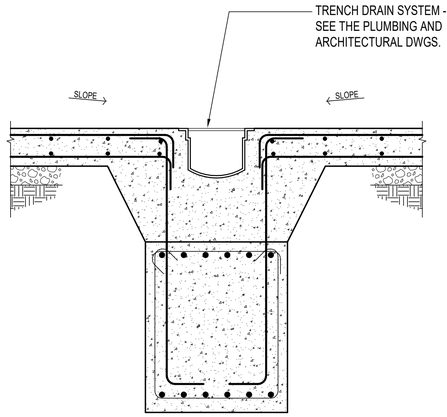

C3 SECTION
3/4" = 1'-0"

FOR DETAILS NOT NOTED SEE SECTION C1/PSB412

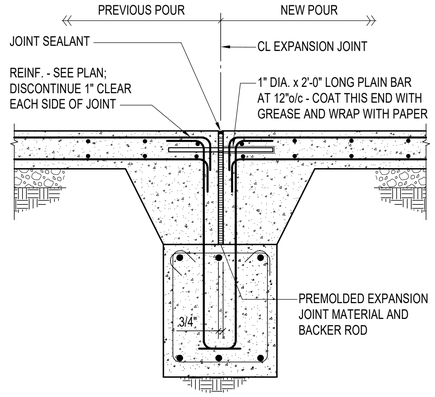

C4 SECTION
3/4" = 1'-0"

FOR DETAILS NOT NOTED SEE SECTION C1/PSB412

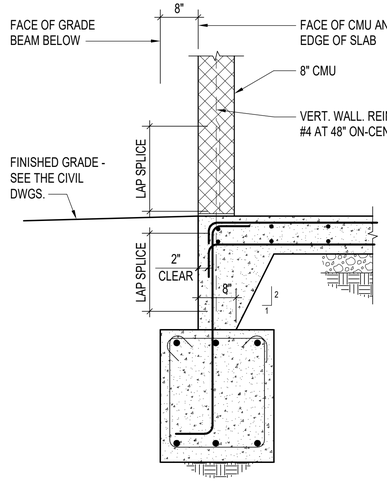

A1 SECTION
3/4" = 1'-0"

FOR DETAILS NOT NOTED SEE SECTION C1/PSB412

SPEIGHT·MARSHALL·FRANCIS
STRUCTURAL ENGINEERS
1228 PERIMETER PARKWAY, SUITE 201
VIRGINIA BEACH, VIRGINIA 23454
P: 757.427.1020
7814 CAROUSEL LANE SUITE 200
RICHMOND, VIRGINIA 23294
P: 804.464.4111
WWW.SMANDF.CO
SMAF Job No: 20.009-B

0 4" 1' 2' 3' 4' 5'
3/4" = 1'-0" GRAPHIC SCALE

NOTE:
IF THIS DRAWING IS LESS THAN 34" X 22"
IT IS A REDUCED SIZE DRAWING

APPR	DATE	DESCRIPTION	SYM
	10/2025	MOD P00006 AND MOD P00007	
	05/2023	MOD P00005	

NAVFAC

COMMONWEALTH OF VIRGINIA
EARL H. INGE, JR.
Lic. No. 035522
1/13/2023
PROFESSIONAL ENGINEER

BAMFORTH
ENGINEERS + SURVEYORS

AE INFO

APPROVED
FOR COMMANDER NAVFAC

ACTIVITY
Approved by J. Scott Roberts,
Asset Management Branch Head &
Supervisory Facility Planner, PWD
Beaufort, SC via email

SATISFACTORY TO DATE	12/15/2022
DES EHI / DRW JSC / CHK DWS	
PM/DM	KTB / RLH
BRANCH MANAGER	NEK
CHIEF ENG/ARCH	EJA
FP ENGINEER	DSN

DEPARTMENT OF THE NAVY
NAVAL FACILITIES ENGINEERING SYSTEMS COMMAND
DC CORE:
NAVAL FACILITIES ENGINEERING SYSTEMS COMMAND ~ MID-ATLANTIC
NORFOLK, VA
MCAS BEAUFORT
BEAUFORT, SC
P-475 AIRCRAFT MAINTENANCE HANGAR - VOLUME 4 (PARKING GARAGE OPTION)
FOUNDATION SECTIONS

SCALE:	3/4" = 1'-0"
EPROJECT NO.:	1363603
CONSTR. CONTR. NO.	
NAVFAC DRAWING NO.	12860297
SHEET	1076 OF 1412

PSB412

DRAWFORM REVISION: 25 AUGUST 2020

Autodesk Docs://2024] VAFAT 130 P3A Maintenance Hangar/PROJ.PATS 1363603.0.rvt
11/11/2025 11:29:46 AM

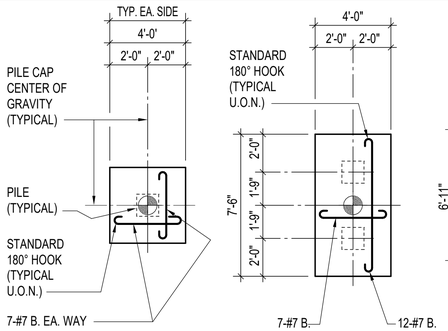

P-1 CAP
MIN. DEPTH = 38"

P-2 CAP
MIN. DEPTH = 44"

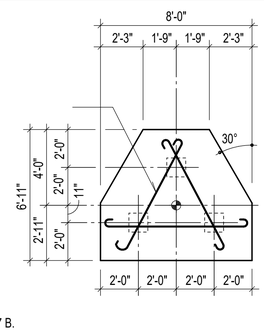

P-3 CAP
MIN. DEPTH = 46"

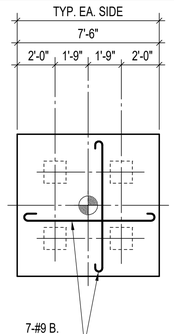

P-4 CAP
MIN. DEPTH = 44"

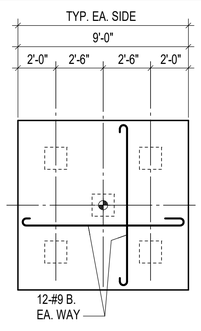

P-5 CAP
MIN. DEPTH = 48"

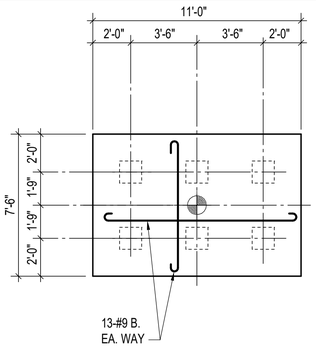

P-6 CAP
MIN. DEPTH = 54"

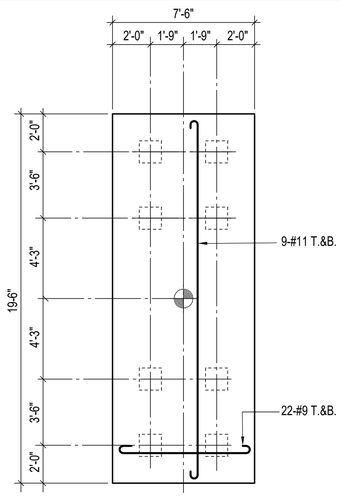

P-8 CAP
MIN. DEPTH = 80"

C1 TYPICAL PILE CAP DETAILS

NOT TO SCALE

TYPICAL PILE EMBEDMENT DETAILS NOTES:

1. PILE CAP DEPTHS SHOWN ARE MINIMUM. CAPS SHALL BE 4" DEEPER THAN GRADE BEAM DEPTHS.
2. PILE CAP MARKS DENOTED ON FOUNDATION PLAN WITH A SUPERSCRIPT 'T' SUFFIX (P-XT) ARE PILE CAPS CONTAINING TENSION AND PILES. FOR ALL SUCH PILE CAPS, PROVIDE TOP REINFORCING OF THE SAME SIZE AND SPACING AS THE SPECIFIED BOTTOM REINFORCING.
3. ASTM A970 COMPLIANT HEADED BAR OR FIELD INSTALLED T-HEAD CAPABLE OF RESISTING 125% OF THE TENSION CAPACITY OF DOWEL.
4. SEE THIS SHEET PSB502 FOR PILE DESIGN CRITERIA.

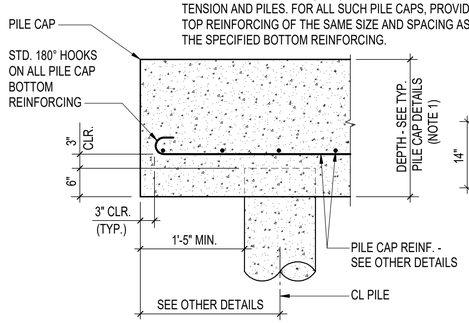

COMPRESSION PILE

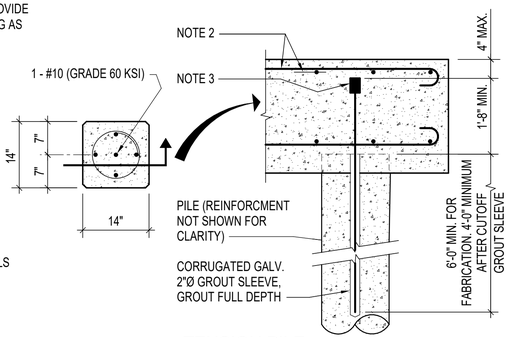

TENSION PILE

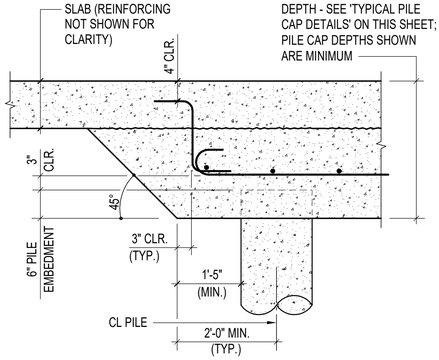

'MONOLITHIC' PILE CAP

C2 TYPICAL PILE EMBEDMENT DETAILS

NOT TO SCALE

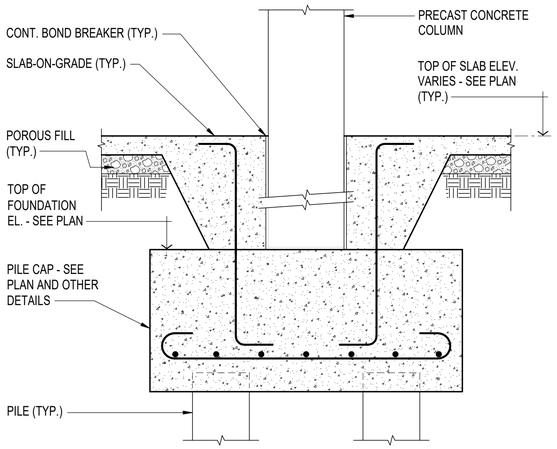

A1 TYPICAL PRECAST COLUMN AND PILE CAP DETAIL

NOT TO SCALE

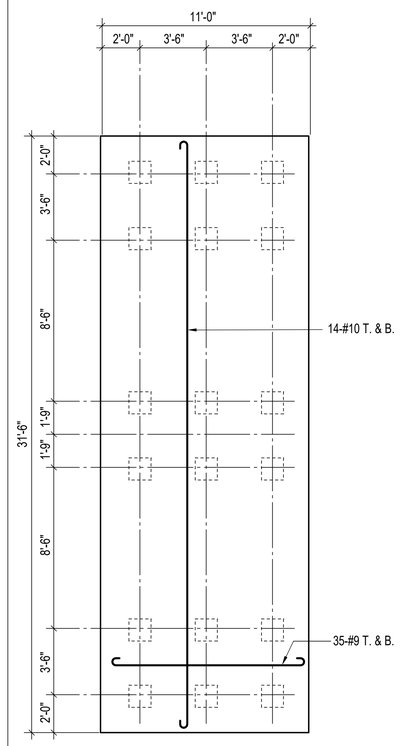

P-18 CAP
MIN. DEPTH = 62"

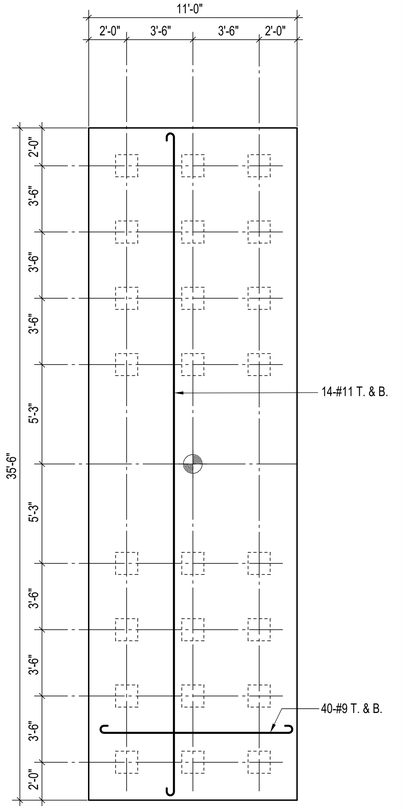

P-24 CAP
MIN. DEPTH = 62"

SPEIGHT·MARSHALL·FRANCIS
STRUCTURAL ENGINEERS
1228 PERIMETER PARKWAY, SUITE 201
VIRGINIA BEACH, VIRGINIA 23454
P: 757.427.1020
7814 CAROUSEL LANE SUITE 200
RICHMOND, VIRGINIA 23294
P: 804.464.4111
SMMF Job No: 20.009-B
WWW.SMANDF.CO

NOTE:
IF THIS DRAWING IS LESS THAN 34" X 22"
IT IS A REDUCED SIZE DRAWING

APPR	DATE	DESCRIPTION	MJS
	10/2025	MOD P00006 AND MOD P00007	
	05/2023	MOD P00005	

NAVFAC

COMMONWEALTH OF VIRGINIA
EARL H. INGE, JR.
Lic. No. 035522
1/13/2023
PROFESSIONAL ENGINEER

BAMFORTH
ENGINEERS + SURVEYORS
AE INFO

APPROVED
FOR COMMANDER NAVFAC
ACTIVITY: Approved by J. Scott Roberts, Asset Management Branch Head & Supervisory Facility Planner, PWD Beaufort, SC via email.
SATISFACTORY TO DATE: 12/15/2022

DES	EHI	DRW	JSC	CHK	DWS
PM/DM					KTB / RLH
BRANCH MANAGER					NEK
CHIEF ENG/ARCH					EJA
FP ENGINEER					DSN

DEPARTMENT OF THE NAVY
NAVAL FACILITIES ENGINEERING SYSTEMS COMMAND
DC CORE
NAVAL FACILITIES ENGINEERING SYSTEMS COMMAND - MID-ATLANTIC
NORFOLK, VA
MCAS BEAUFORT
BEAUFORT, SC
P-475 AIRCRAFT MAINTENANCE HANGAR - VOLUME 4 (PARKING GARAGE OPTION)
TYPICAL DETAILS

SCALE:	3/4" = 1'-0"
EPROJECT NO.:	1363603
CONSTR. CONTR. NO.	
NAVFAC DRAWING NO.	12860298
SHEET	1077 OF 1412

PSB501

DRAWFORM REVISION: 25 AUGUST 2020

Autodesk Docs://20240_VMFA1 SDD 730 Maintenance Hangar/PRNO P475 1363603-S.rvt
11/11/2025 11:32:46 AM

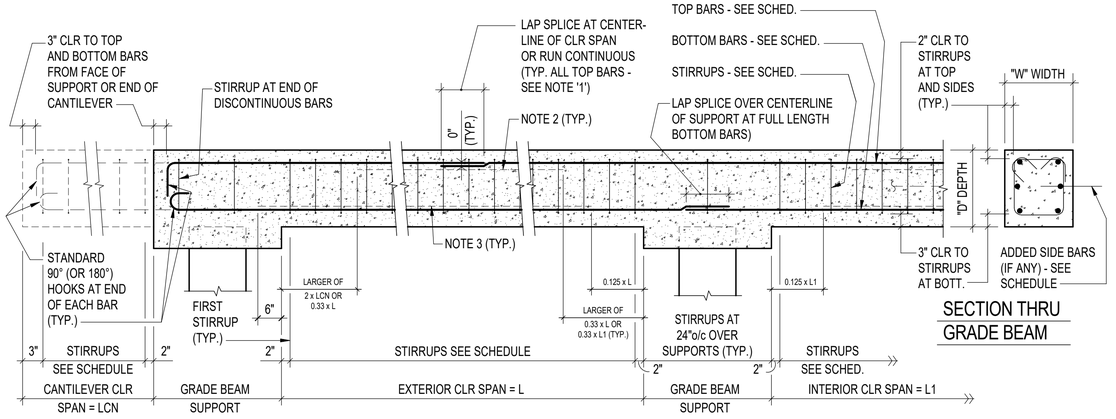

SECTION THRU GRADE BEAM

TYPICAL

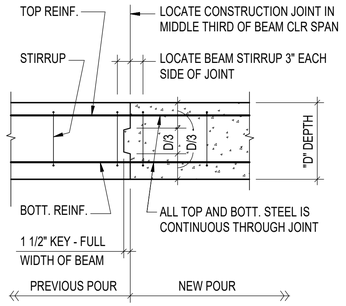

CONSTRUCTION JOINT

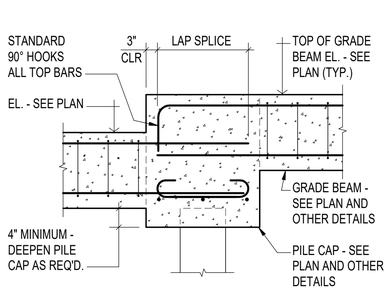

STEPPED FOUNDATION

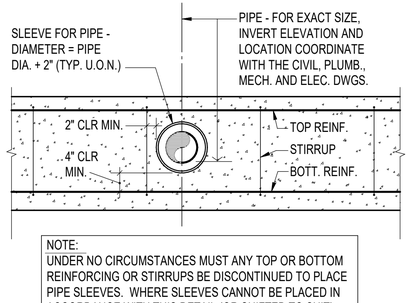

NOTE:
UNDER NO CIRCUMSTANCES MUST ANY TOP OR BOTTOM REINFORCING OR STIRRUPS BE DISCONTINUED TO PLACE PIPE SLEEVES. WHERE SLEEVES CANNOT BE PLACED IN ACCORDANCE WITH THIS DETAIL (OR SHIFTED TO SUIT) IMMEDIATELY CONTACT THE ARCHITECT.
NO PIPE SLEEVES ARE ALLOWED IN PILE CAPS OR WITHIN 3'-0" OF GRADE BEAM SUPPORTS.

PIPE SLEEVE THRU GRADE BEAM

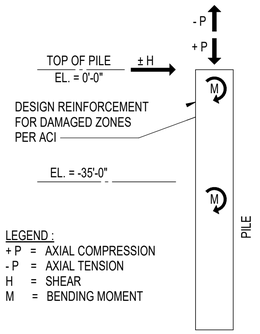

LEGEND :
+ P = AXIAL COMPRESSION
- P = AXIAL TENSION
H = SHEAR
M = BENDING MOMENT

PILE DESIGN SCHEDULE				
ELEVATION 0'-0" TO -35'-0"	AXIAL (TONS)	SHEAR (TONS)	BENDING (FT-KIPS)	UNBRACED LENGTH (FT)
LOAD COMBINATION 1	98	0	0	0
LOAD COMBINATION 2	98	4.5	25	10
LOAD COMBINATION 3	-65	4.5	25	10
ELEVATION -35'-0" TO -75'-0'	AXIAL (TONS)	SHEAR (TONS)	BENDING (FT-KIPS)	UNBRACED LENGTH (FT)
LOAD COMBINATION 4	98	-2	-2	10
LOAD COMBINATION 5	-65	-2	-2	10

PILE DESIGN SCHEDULE NOTES:
1. AXIAL LOADS ARE SERVICE LOADS.
2. SHEAR AND BENDING LOADS ARE ULTIMATE LOADS.

C3 PILE DESIGN CRITERIA
NOT TO SCALE

CONCRETE GRADE BEAM SCHEDULE									
MARK	"W" WIDTH (IN.)	"D" DEPTH (IN.)	TOP BARS		BOTTOM BARS		STIRRUPS		REMARKS
			QUAN.	SIZE	QUAN.	SIZE	SIZE	SPACE	
GB-1	24	28	3	#9	3	#9	#4	12"o/c	---
GB-2	36	36	10	#11	10	#11	3 - #4	7"o/c	NOTE A
GB-3	30	36	6	#8	6	#8	#4	12"o/c	---

CONCRETE GRADE BEAM SCHEDULE NOTE:
A. PROVIDE 2 - #4 SIDE BARS THROUGH DEPTH OF GRADE BEAM EACH SIDE.

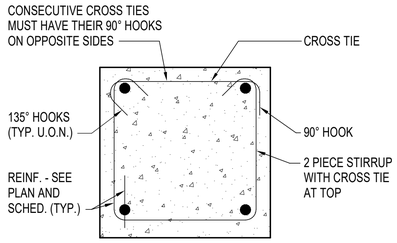

TYPICAL 2 PIECE STIRRUP DETAIL

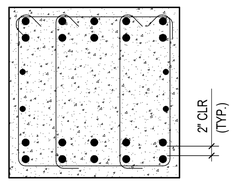

SECTION THRU GB-2

TYPICAL CONCRETE GRADE BEAM DETAIL NOTES:
1. WHERE AREA OF TOP BARS IN ADJACENT SPANS DIFFER, CARRY COMBINATION WITH GREATEST AREA TO MIDSPAN OF ADJACENT SPAN.
2. DISCONTINUE 50% MAXIMUM OF TOP BARS WITHIN MIDDLE THIRD OF SPAN TO DIMENSIONS INDICATED. OUTSIDE FACE BARS ARE ALWAYS FULL LENGTH. ALL TOP BARS INDICATED MUST BE PRESENT AT CANTILEVERS AND OVER SUPPORTS.
3. BOTTOM BARS - ALTERNATE 50% MINIMUM 'LONG' BARS AND 50% MAXIMUM 'SHORT' BARS; OUTSIDE FACE BARS ARE 'LONG' BARS.

A1 TYPICAL CONCRETE GRADE BEAM DETAILS
NOT TO SCALE

SPEIGHT·MARSHALL·FRANCIS
STRUCTURAL ENGINEERS
1225 PERIMETER PARKWAY, SUITE 201
VIRGINIA BEACH, VIRGINIA 23454
P: 757.427.1020
7814 CAROUSEL LANE SUITE 200
RICHMOND, VIRGINIA 23294
P: 804.464.4111
SMF Job No: 20.009-B
WWW.SMANDF.CO

NOTE:
IF THIS DRAWING IS LESS THAN 34" X 22"
IT IS A REDUCED SIZE DRAWING

APPR	DATE	DESCRIPTION	SYM
	10/2025	MOD P00006 AND MOD P00007	
	05/2023	MOD P00005	

NAVFAC

COMMONWEALTH OF VIRGINIA
EARL H. INGE, JR.
Lic. No. 035522
1/13/2023
PROFESSIONAL ENGINEER

BAMFORTH ENGINEERS + SURVEYORS

AE INFO

APPROVED
FOR COMMANDER NAVFAC

ACTIVITY
Approved by J. Scott Roberts, Asset Management Branch Head & Supervisory Facility Planner, PWD Beaufort, SC via email.

SATISFACTORY TO DATE 12/15/2022

DES	EHI	DRW	JSC	CHK	DWS
PM/DM					KTB / RLH
BRANCH MANAGER					NEK
CHIEF ENG/ARCH					EJA
FP ENGINEER					DSN

DEPARTMENT OF THE NAVY
NAVAL FACILITIES ENGINEERING SYSTEMS COMMAND
DC CORE
NAVAL FACILITIES ENGINEERING SYSTEMS COMMAND - MID-ATLANTIC
NORFOLK, VA
MCAS BEAUFORT
BEAUFORT, SC
P-475 AIRCRAFT MAINTENANCE HANGAR - VOLUME 4 (PARKING GARAGE OPTION)
TYPICAL DETAILS

SCALE: 3/4" = 1'-0"
EPROJECT NO.: 1363603
CONSTR. CONTR. NO.
NAVFAC DRAWING NO.: 12860299
SHEET 1078 OF 1412

PSB502

DRAWFORM REVISION: 25 AUGUST 2020

Autodesk Docs://20042 MFA1 502 F3A Maintenance Hangar/PSNO PAT1 1363603.5.rvt
11/11/2025 11:32:46 AM

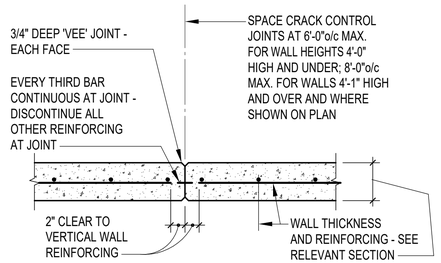

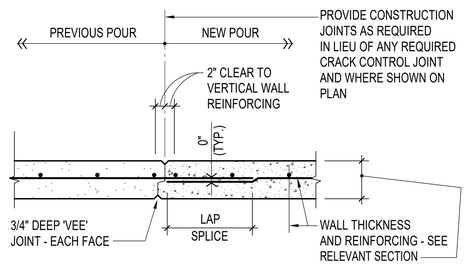

SINGLE MAT REINFORCING

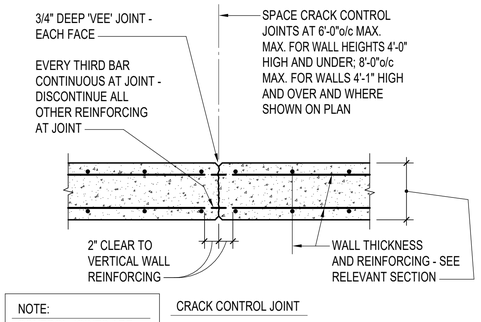

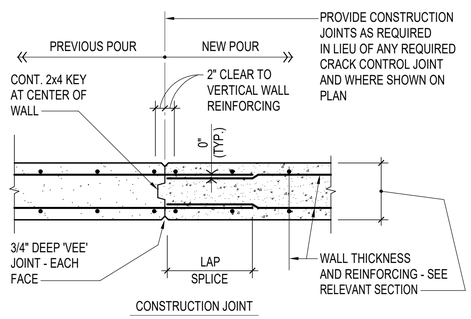

NOTE:
CONTROL JOINTS ARE NOT PERMITTED IN CONCRETE SHERWALLS.

DOUBLE MAT REINFORCING

VERTICAL JOINTS

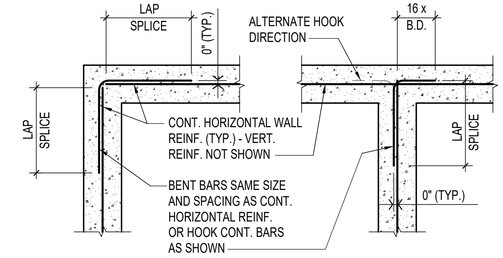

SINGLE MAT REINFORCING

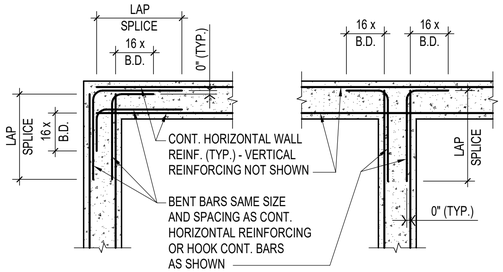

DOUBLE MAT REINFORCING

AT CORNERS AND INTERSECTIONS

LAP SPLICE LENGTHS

FOR REINFORCING BAR LAP SPLICE LENGTHS IN CONCRETE SEE THE SCHEDULE ON SHEET S002.

A1 TYPICAL CONCRETE WALL DETAILS

NOT TO SCALE

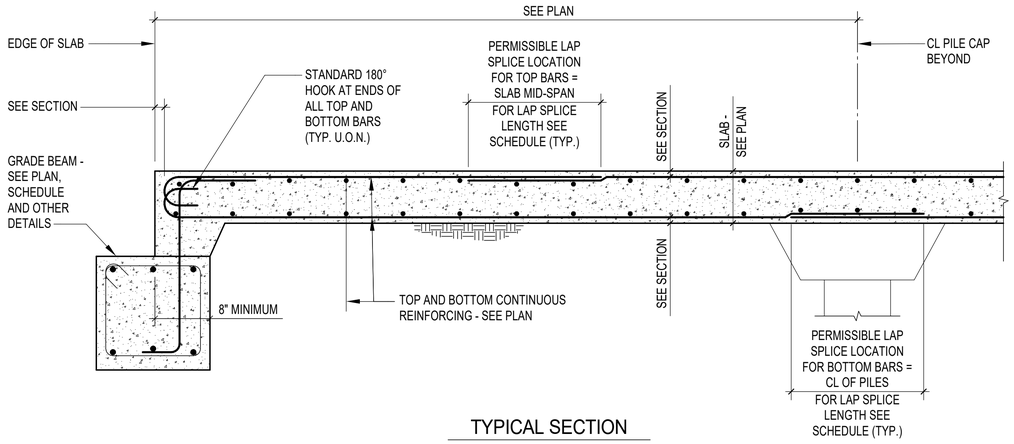

TYPICAL SECTION

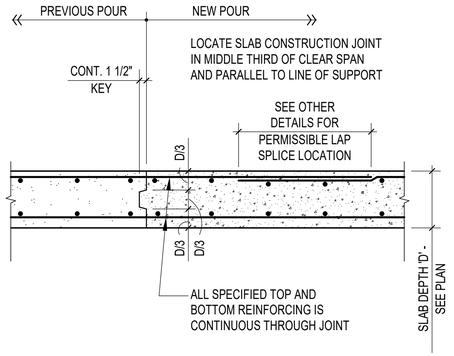

CONSTRUCTION JOINT

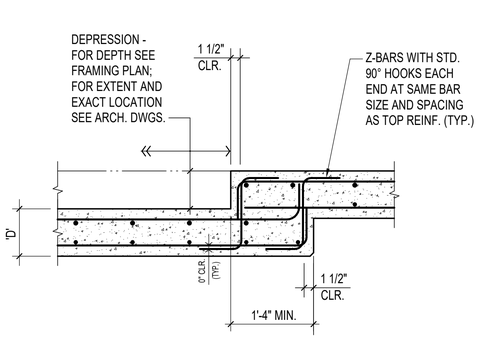

DEPRESSION

A1 TYPICAL STRUCTURAL SLAB-ON-GRADE DETAILS

NOT TO SCALE

NOTE:
IF THIS DRAWING IS LESS THAN 34" X 22"
IT IS A REDUCED SIZE DRAWING

SPEIGHT·MARSHALL·FRANCIS
STRUCTURAL ENGINEERS
1228 PERIMETER PARKWAY, SUITE 201
VIRGINIA BEACH, VIRGINIA 23454
P: 757.427.1020
7814 CAROUSEL LANE SUITE 200
RICHMOND, VIRGINIA 23294
P: 804.464.4111
WWW.SMANDF.CO
SMAF Job No: 20.009-B

APPR	DATE	DESCRIPTION	MK
	10/2025	MOD P00006 AND MOD P00007	
	05/2023	MOD P00005	

NAVFAC

COMMONWEALTH OF VIRGINIA
EARL H. INGE, JR.
Lic. No. 035522
1/13/2023
PROFESSIONAL ENGINEER

BAMFORTH ENGINEERS + SURVEYORS

A/E INFO

APPROVED

FOR COMMANDER NAVFAC

ACTIVITY
Approved by J. Scott Roberts,
Asset Management Branch Head &
Supervisory Facility Planner, PWD
Beaufort, SC via email

SATISFACTORY TO DATE	12/15/2022
DES EHI / DRW JSC / CHK DWS	
PM/DM	KTB / RLH
BRANCH MANAGER	NEK
CHIEF ENG/ARCH	EJA
FP ENGINEER	DSN

DEPARTMENT OF THE NAVY
NAVAL FACILITIES ENGINEERING SYSTEMS COMMAND
DC CORE:
NAVAL FACILITIES ENGINEERING SYSTEMS COMMAND ~ MID-ATLANTIC
NORFOLK, VA
MCAS BEAUFORT
BEAUFORT, SC

P-475 AIRCRAFT MAINTENANCE HANGAR - VOLUME 4 (PARKING GARAGE OPTION)

TYPICAL DETAILS

SCALE:	3/4" = 1'-0"
EPROJECT NO.:	1363603
CONSTR. CONTR. NO.	
NAVFAC DRAWING NO.	12860300
SHEET	1079 OF 1412

PSB503

DRAWFORM REVISION: 25 AUGUST 2020

Autodesk Docs://2042 VAFAT 100 P3A Maintenance Hangar/P3NGLPATS 1363603.rvt
11/11/2025 11:24:46 AM

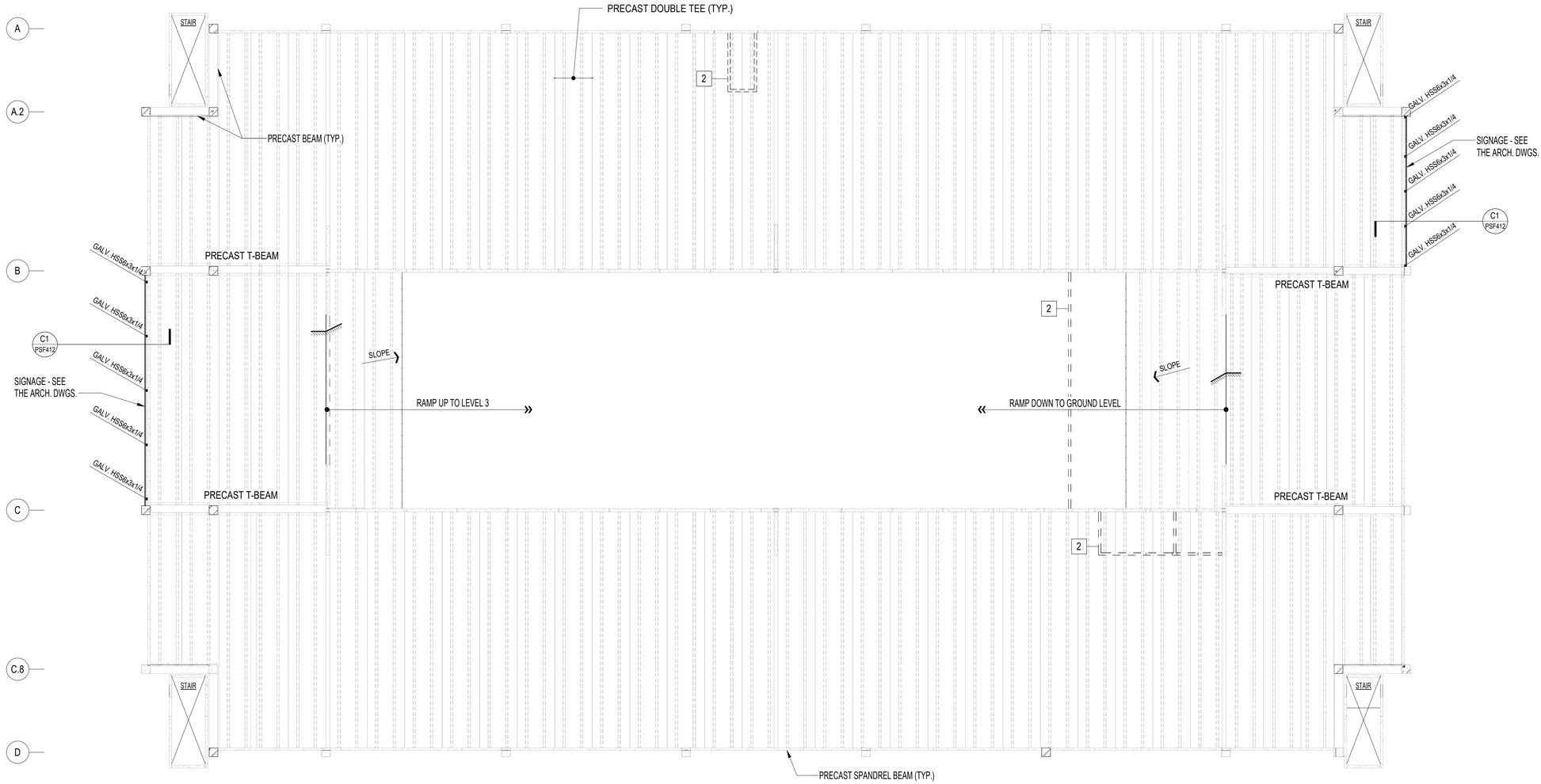

SECOND FLOOR FRAMING PLAN

1/16" = 1'-0" (FOR PLAN NOTES AND LEGEND SEE SHEET PSF401)

NOTE:
THE PURPOSE OF THIS DRAWING IS SOLELY TO CONVEY THE ASSUMED APPROXIMATE CONSTRUCTION OF THE PRECAST GARAGE STRUCTURE (BY PRECAST MANUFACTURER) FOR THE PURPOSE OF DETERMINING LOAD PATH AND APPROXIMATE FOUNDATION REACTIONS. NOTIFY THE STRUCTURAL ENGINEER OF RECORD IMMEDIATELY IF PROPOSED FRAMING DIFFERS FROM THAT ASSUMED.

PLAN NORTH

0 10' 20' 40' 60'
1/16" = 1'-0" GRAPHIC SCALE

NOTE:
IF THIS DRAWING IS LESS THAN 34" X 22"
IT IS A REDUCED SIZE DRAWING

SPEIGHT·MARSHALL·FRANCIS
STRUCTURAL ENGINEERS
1228 PERIMETER PARKWAY, SUITE 201
VIRGINIA BEACH, VIRGINIA 23454
P: 757.427.1020
7814 CAROUSEL LANE SUITE 200
RICHMOND, VIRGINIA 23294
P: 804.464.4111
WWW.SMANDF.CO
SMAF Job No: 20.009-B

APPR	DATE	DESCRIPTION	SYM
	10/2025	MOD P00006 AND MOD P00007	
	05/2023	MOD P00005	

COMMONWEALTH OF VIRGINIA
EARL H. INGE, JR.
Lic. No. 035522
1/13/2023
PROFESSIONAL ENGINEER

BAMFORTH ENGINEERS + SURVEYORS

A/E INFO

APPROVED
FOR COMMANDER NAVFAC

ACTIVITY
Approved by J. Scott Roberts,
Asset Management Branch Head &
Supervisory Facility Planner, PWD
Beaufort, SC via email.

SATISFACTORY TO DATE	12/15/2022
DES EHI / DRW JSC / CHK DWS	
PM/DM	KTB / RLH
BRANCH MANAGER	NEK
CHIEF ENG/ARCH	EJA
FP ENGINEER	DSN

DEPARTMENT OF THE NAVY
NAVAL FACILITIES ENGINEERING SYSTEMS COMMAND
DC CORE
NAVAL FACILITIES ENGINEERING SYSTEMS COMMAND ~ MID-ATLANTIC
NORFOLK, VA
MCAS BEAUFORT
BEAUFORT, SC
P-475 AIRCRAFT MAINTENANCE HANGAR -
VOLUME 4 (PARKING GARAGE OPTION)
SECOND FLOOR FRAMING PLAN

SCALE:	1/16" = 1'-0"
EPROJECT NO.:	1363603
CONSTR. CONTR. NO.	
NAVFAC DRAWING NO.	12860301
SHEET	1080 OF 1412

PSF101

DRAWFORM REVISION: 25 AUGUST 2020

Autodesk Docs://2024] VAFAT 1302 P3A Maintenance Hangar-PRKG.PAR-1363603-S.rvt
11/11/2025 11:24:47 AM

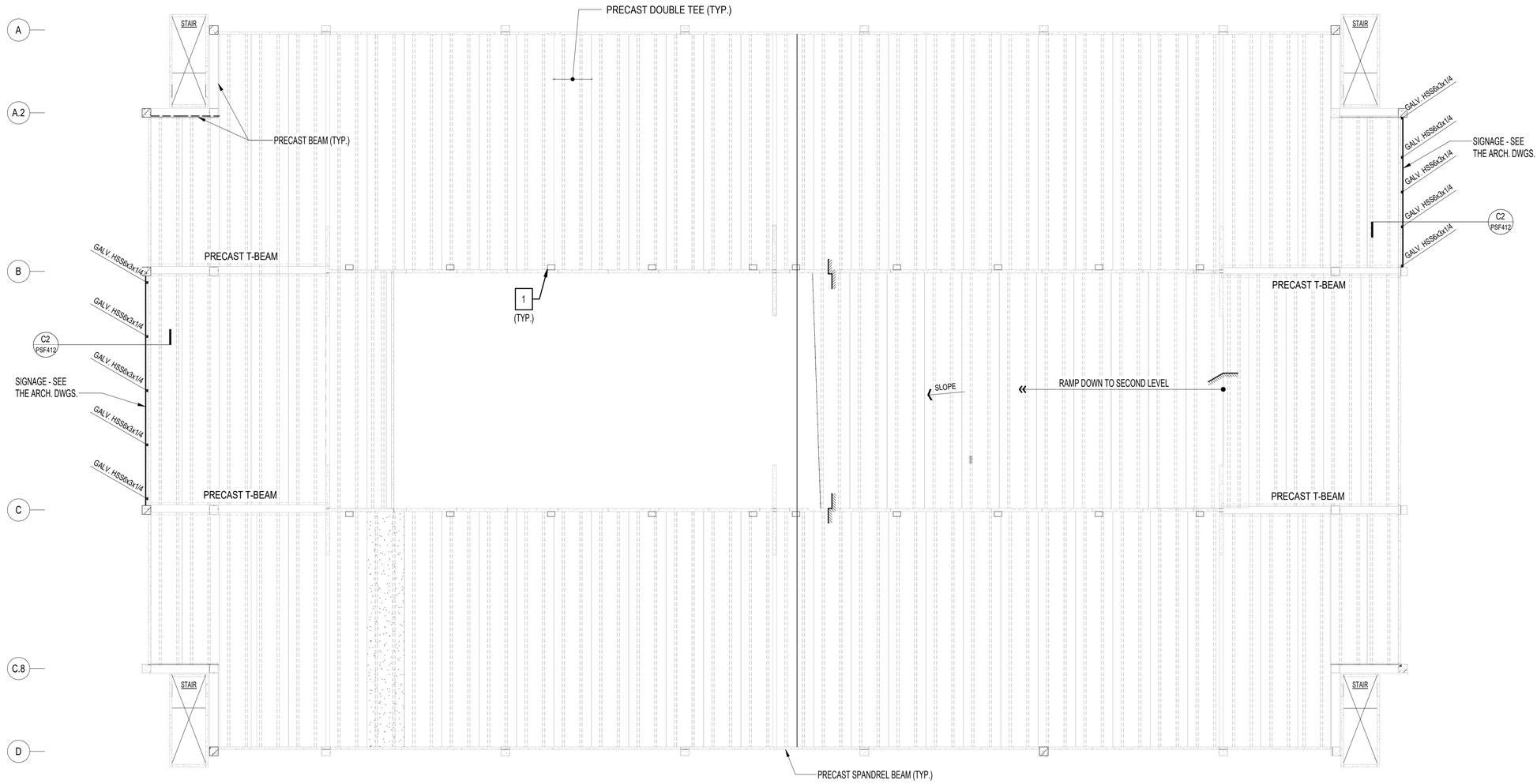

THIRD FLOOR FRAMING PLAN

1/16" = 1'-0" (FOR PLAN NOTES AND LEGEND SEE SHEET PSF401)

NOTE:
THE PURPOSE OF THIS DRAWING IS SOLELY TO CONVEY THE ASSUMED APPROXIMATE CONSTRUCTION OF THE PRECAST GARAGE STRUCTURE (BY PRECAST MANUFACTURER) FOR THE PURPOSE OF DETERMINING LOAD PATH AND APPROXIMATE FOUNDATION REACTIONS. NOTIFY THE STRUCTURAL ENGINEER OF RECORD IMMEDIATELY IF PROPOSED FRAMING DIFFERS FROM THAT ASSUMED.

PLAN NORTH N

0 10' 20' 40' 60'
1/16" = 1'-0" GRAPHIC SCALE

NOTE:
IF THIS DRAWING IS LESS THAN 34" X 22"
IT IS A REDUCED SIZE DRAWING

SPEIGHT·MARSHALL·FRANCIS
STRUCTURAL ENGINEERS
1228 PERIMETER PARKWAY, SUITE 201
VIRGINIA BEACH, VIRGINIA 23454
P: 757.427.1020
7814 CAROUSEL LANE SUITE 200
RICHMOND, VIRGINIA 23294
P: 804.464.4111
WWW.SMANDF.CO SMAF Job No: 20.009-B

APPR	DATE	DESCRIPTION	SYM
	10/2025	MOD P00006 AND MOD P00007	
	05/2023	MOD P00005	

NAVFAC

COMMONWEALTH OF VIRGINIA
EARL H. INGE, JR.
Lic. No. 035522
1/13/2023
PROFESSIONAL ENGINEER

BAMFORTH ENGINEERS + SURVEYORS

AE INFO

APPROVED
FOR COMMANDER NAVFAC

ACTIVITY
Approved by J. Scott Roberts,
Asset Management Branch Head &
Supervisory Facility Planner, PWD
Beaufort, SC via email

SATISFACTORY TO DATE 12/15/2022

DES	EHI	DRW	JSC	CHK	DWS

PM/DM KTB / RLH
BRANCH MANAGER NEK
CHIEF ENG/ARCH EJA
FP ENGINEER DSN

DEPARTMENT OF THE NAVY
NAVAL FACILITIES ENGINEERING SYSTEMS COMMAND
DC CORE
NAVAL FACILITIES ENGINEERING SYSTEMS COMMAND ~ MID-ATLANTIC
NORFOLK, VA
MCAS BEAUFORT
BEAUFORT, SC
P-475 AIRCRAFT MAINTENANCE HANGAR - VOLUME 4 (PARKING GARAGE OPTION)
THIRD FLOOR FRAMING PLAN

SCALE: 1/16" = 1'-0"
EPROJECT NO.: 1363603
CONSTR. CONTR. NO.
NAVFAC DRAWING NO. 12860302
SHEET 1081 OF 1412

PSF111

DRAWFORM REVISION: 25 AUGUST 2020

Autodesk Docs://20242 VAFAT 530 F33 Maintenance Hangar/PROJ PKR 1363603-S.rvt
11/11/2025 11:24:48 AM

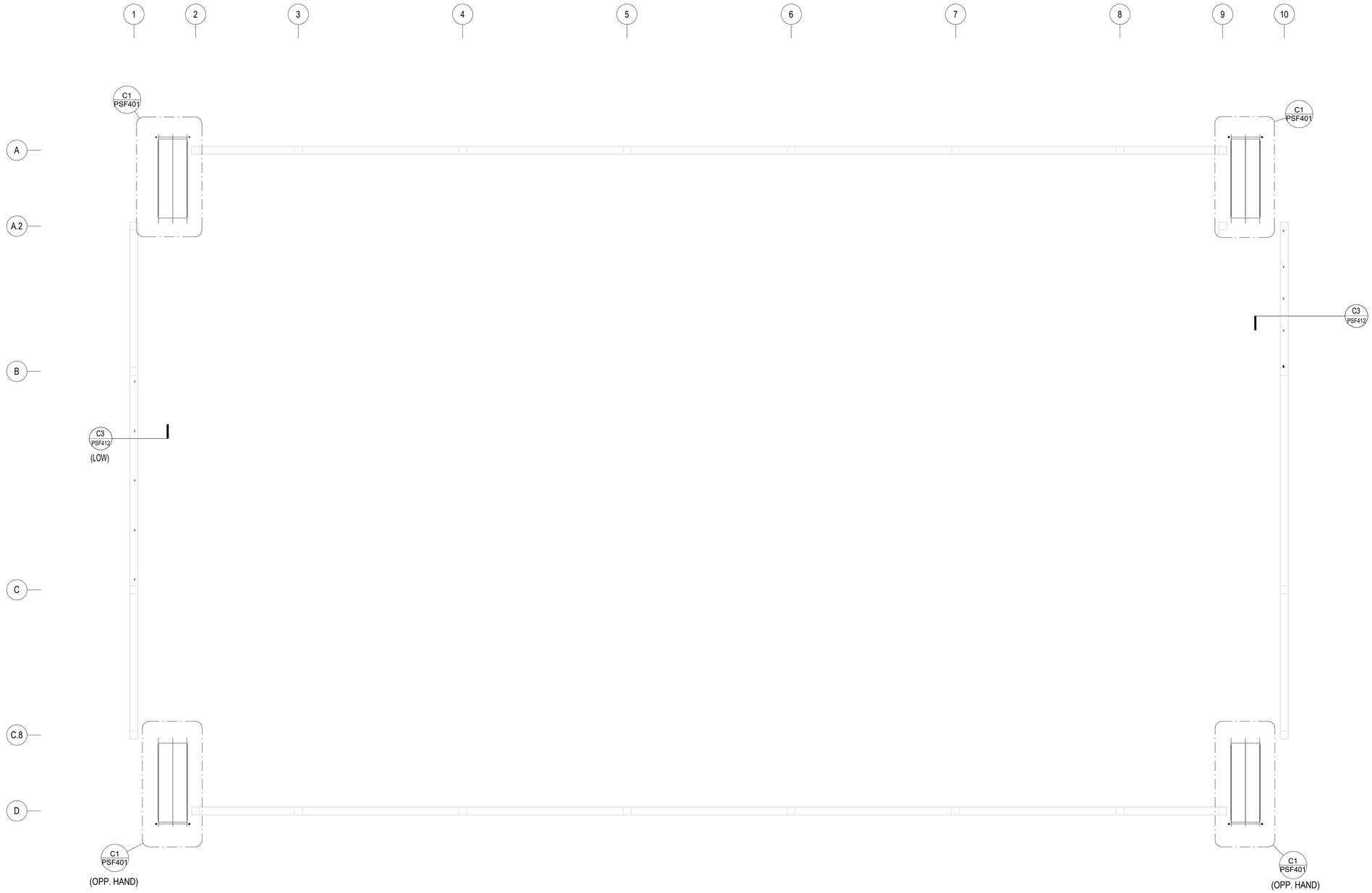

ROOF FRAMING PLAN

1/16" = 1'-0" (FOR PLAN NOTES AND LEGEND SEE SHEET PSF401)

PLAN NORTH N

0 10' 20' 40' 60'

1/16" = 1'-0" GRAPHIC SCALE

NOTE:
IF THIS DRAWING IS LESS THAN 34" X 22"
IT IS A REDUCED SIZE DRAWING

SPEIGHT·MARSHALL·FRANCIS
STRUCTURAL ENGINEERS
1228 PERIMETER PARKWAY, SUITE 201
VIRGINIA BEACH, VIRGINIA 23454
P: 757.427.1020
7814 CAROUSEL LANE SUITE 200
RICHMOND, VIRGINIA 23294
P: 804.464.4111
WWW.SMANDF.CO
SMAF Job No: 20.009-B

APPR	DATE	DESCRIPTION	STM
	10/2025	MOD P00006 AND MOD P00007	
	05/2023	MOD P00005	

COMMONWEALTH OF VIRGINIA
EARL H. INGE, JR.
Lic. No. 035522
1/13/2023
PROFESSIONAL ENGINEER

BAMFORTH ENGINEERS + SURVEYORS

AE INFO

APPROVED

FOR COMMANDER NAVFAC

ACTIVITY
Approved by J. Scott Roberts,
Asset Management Branch Head &
Supervisory Facility Planner, PWD
Beaufort, SC via email

SATISFACTORY TO DATE 12/15/2022

DES	EHI	DRW	JSC	CHK	DWS
PM/DM					KTB / RLH
BRANCH MANAGER					NEK
CHIEF ENG/ARCH					EJA
FP ENGINEER					DSN

DEPARTMENT OF THE NAVY
NAVAL FACILITIES ENGINEERING SYSTEMS COMMAND ~ MID-ATLANTIC
DC CORE
NORFOLK, VA
MCAS BEAUFORT
BEAUFORT, SC
P-475 AIRCRAFT MAINTENANCE HANGAR - VOLUME 4 (PARKING GARAGE OPTION)
ROOF FRAMING PLAN

SCALE:	1/16" = 1'-0"
EPROJECT NO.:	1363603
CONSTR. CONTR. NO.	
NAVFAC DRAWING NO.	12860303
SHEET	1082 OF 1412

PSF121

DRAWFORM REVISION: 25 AUGUST 2020

Autodesk Docs://2042 VAFAT 539 P3A Maintenance Hangar/P5HQ.PAT5_15KB003-S.rvt
11/11/2025 11:24:48 AM

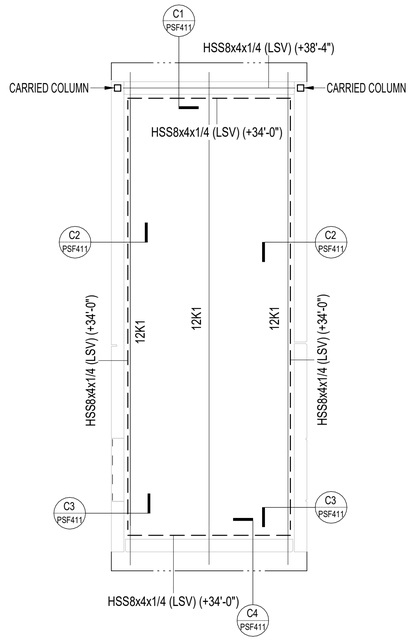

C1 TYPICAL STAIR ROOF FRAMING PLAN

1/4" = 1'-0"

GENERAL FRAMING PLAN NOTES :

A. SEE THE DIMENSION PLAN ON SHEET PSB101 AND THE ARCHITECTURAL DRAWINGS FOR DIMENSIONS NOT SHOWN.

B. FOR THE STRUCTURAL NOTES AND ABBREVIATIONS SEE SHEETS PS001 AND PS002.

C. ROOF JOISTS AND OTHER ROOF DECK SUPPORTS MUST BE SPACED EQUALLY BETWEEN GIVEN LOCATIONS, WITH A MAXIMUM SPACING OF 5'-0" ON-CENTER.

D. ROOF CONSTRUCTION MUST BE 1 1/2" STEEL ROOF DECK SPANNING BETWEEN SUPPORTS.

E. ALL STEEL COLUMNS, PLATES AND CONNECTORS MUST BE HOT-DIPPED GALVANIZED.

X FRAMING PLAN KEY NOTES :

1. DESIGN PRECAST CONCRETE STRUCTURE FOR SUPPORT OF ALUMINUM CANOPY SYSTEM. COORDINATE APPLIED LOADS WITH THE CANOPY DESIGN ENGINEEER AND MANUFACTURER. ALUMINUM CANOPY SYSTEM MUST BE PROVIDED IF PARKING GARAGE PV PANEL OPTION IS AWARDED. SEE VOLUME 6 FOR PLANS WITHOUT PANELS.

2. NON-LOAD BEARING CMU WALL BELOW. SEE C1/PSF501 FOR TOP OF WALL BRACING.

3. TURN DOWN STRUCTURAL SLAB ONTO GRADE BEAM (12" WIDE AT TOP OF GRADE BEAM) AND PROVIDE Z-BAR DOWELS AS DETAILED IN SECTION C1/PSB411.

FRAMING PLAN LEGEND :

(+XX'-XX") = TOP OF STEEL (T.O.S.) ELEVATION - MEASURED FROM REFERENCE ELEVATION 0'-0" (HI = HIGH; LO = LOW; SL = SLOPE)

(X) = COLUMN GRID MARK

± = APPROXIMATE DIMENSION OR ELEVATION (FIELD VERIFY)

PLAN NORTH N

0 1' 5' 10' 15'

1/4" = 1'-0" GRAPHIC SCALE

NOTE:
IF THIS DRAWING IS LESS THAN 34" X 22"
IT IS A REDUCED SIZE DRAWING

SPEIGHT·MARSHALL·FRANCIS
STRUCTURAL ENGINEERS
1228 PERIMETER PARKWAY, SUITE 201
VIRGINIA BEACH, VIRGINIA 23454
P: 757.427.1020
7814 CAROUSEL LANE SUITE 200
RICHMOND, VIRGINIA 23294
P: 804.464.4111
WWW.SMANDF.CO
SMAF Job No: 20.009-B

APPR	DATE	DESCRIPTION	MK
	10/2025	MOD P00006 AND MOD P00007	
	05/2023	MOD P00005	

NAVFAC

COMMONWEALTH OF VIRGINIA
EARL H. INGE, JR.
Lic. No. 035522
1/13/2023
PROFESSIONAL ENGINEER

BAMFORTH ENGINEERS + SURVEYORS

AE INFO

APPROVED

FOR COMMANDER NAVFAC

ACTIVITY
Approved by J. Scott Roberts,
Asset Management Branch Head &
Supervisory Facility Planner, PWD
Beaufort, SC via email.

SATISFACTORY TO DATE 12/15/2022

DES	EHI	DRW	JSC	CHK	DWS
PM/DM					KTB / RLH
BRANCH MANAGER					NEK
CHIEF ENG/ARCH					EJA
FP ENGINEER					DSN

DEPARTMENT OF THE NAVY
NAVAL FACILITIES ENGINEERING SYSTEMS COMMAND
DC CORE

NAVAL FACILITIES ENGINEERING SYSTEMS COMMAND ~ MID-ATLANTIC
NORFOLK, VA

MCAS BEAUFORT
BEAUFORT, SC

P-475 AIRCRAFT MAINTENANCE HANGAR - VOLUME 4 (PARKING GARAGE OPTION)

FRAMING PLAN DETAILS

SCALE:	As indicated
EPROJECT NO.:	1363603
CONSTR. CONTR. NO.	
NAVFAC DRAWING NO.	12860304
SHEET	1083 OF 1412

PSF401

DRAWFORM REVISION: 25 AUGUST 2020

Autodesk Docs://2024] VAFAT 1302 F35 Maintenance Hangar-P790 (J) P475 1363603-S.rvt
11/11/2025 11:24:48 AM

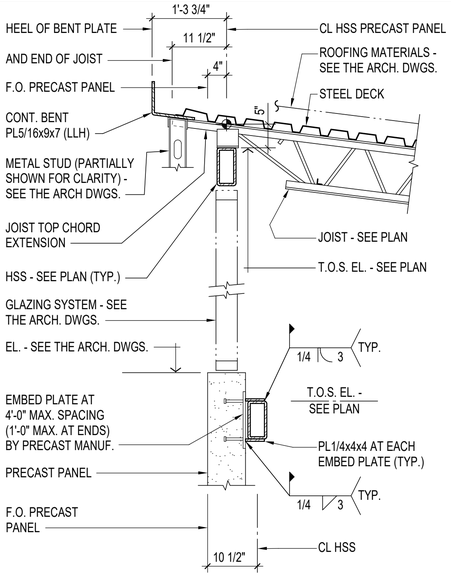

C1 SECTION
3/4" = 1'-0"

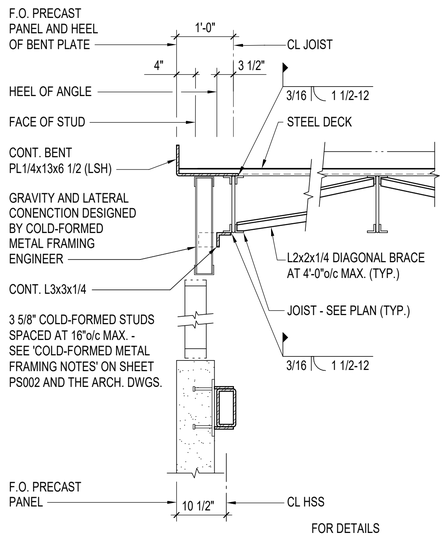

C2 SECTION
3/4" = 1'-0"

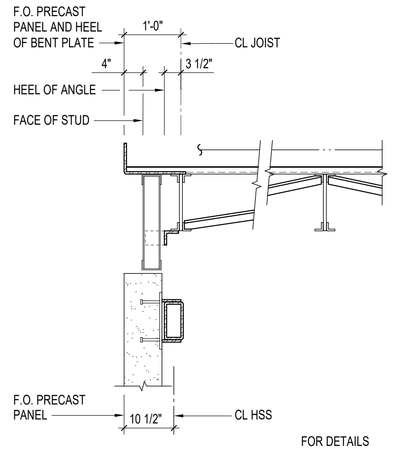

C3 SECTION
3/4" = 1'-0"

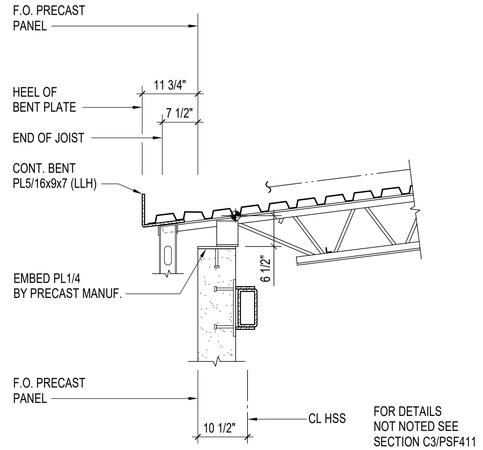

C4 SECTION
3/4" = 1'-0"

SPEIGHT·MARSHALL·FRANCIS
STRUCTURAL ENGINEERS
1228 PERIMETER PARKWAY, SUITE 201
VIRGINIA BEACH, VIRGINIA 23454
P: 757.427.1020
7814 CAROUSEL LANE SUITE 200
RICHMOND, VIRGINIA 23294
P: 804.464.4111
WWW.SMANDF.CO
SMAF Job No: 20.009-B

0 4" 1' 2' 3' 4' 5'
3/4" = 1'-0" GRAPHIC SCALE

NOTE:
IF THIS DRAWING IS LESS THAN 34" X 22"
IT IS A REDUCED SIZE DRAWING

APPR	DATE	DESCRIPTION	SYM
	10/2025	MOD P00006 AND MOD P00007	
	05/2023	MOD P00005	

NAVFAC

COMMONWEALTH OF VIRGINIA
EARL H. INGE, JR.
Lic. No. 035522
1/13/2023
PROFESSIONAL ENGINEER

BAMFORTH
ENGINEERS + SURVEYORS

AE INFO

APPROVED
FOR COMMANDER NAVFAC

ACTIVITY
Approved by J. Scott Roberts,
Asset Management Branch Head &
Supervisory Facility Planner, PWD
Beaufort, SC via email.

SATISFACTORY TO DATE	12/15/2022
DES EHI / DRW JSC / CHK DWS	
PM/DM	KTB / RLH
BRANCH MANAGER	NEK
CHIEF ENG/ARCH	EJA
FP ENGINEER	DSN

DEPARTMENT OF THE NAVY
NAVAL FACILITIES ENGINEERING SYSTEMS COMMAND
DC CORE:
NAVAL FACILITIES ENGINEERING SYSTEMS COMMAND ~ MID-ATLANTIC
NORFOLK, VA
MCAS BEAUFORT
BEAUFORT, SC
P-475 AIRCRAFT MAINTENANCE HANGAR - VOLUME 4 (PARKING GARAGE OPTION)
FRAMING SECTIONS

SCALE:	3/4" = 1'-0"
EPROJECT NO.:	1363603
CONSTR. CONTR. NO.	
NAVFAC DRAWING NO.	12860305
SHEET	1084 OF 1412

PSF411

DRAWFORM REVISION: 25 AUGUST 2020

Autodesk Docs://2042 VAFAT 100 F3A Maintenance Hangar/PROJ PKR 1363603.rvt
11/11/2025 11:32:49 AM

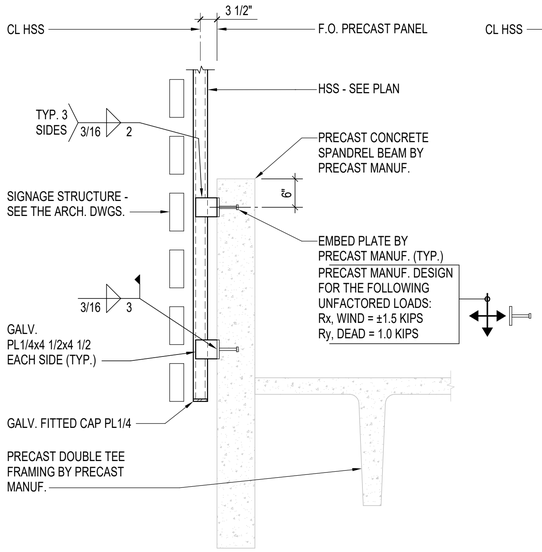

C1 SECTION
3/4" = 1'-0"

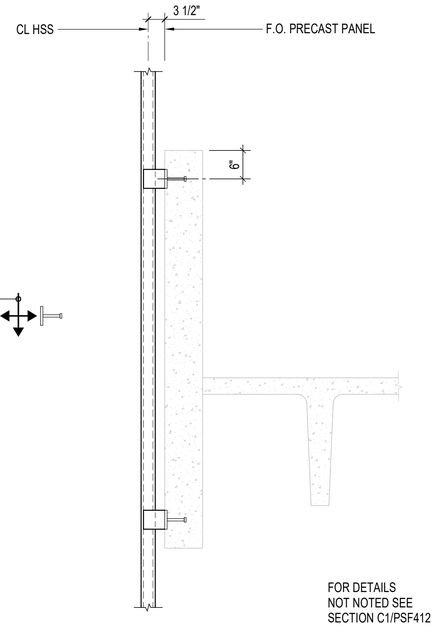

C2 SECTION
3/4" = 1'-0"

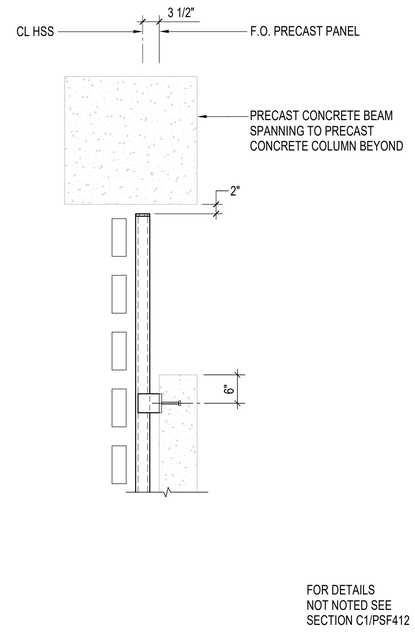

C3 SECTION
3/4" = 1'-0"

SPEIGHT·MARSHALL·FRANCIS
STRUCTURAL ENGINEERS
1228 PERIMETER PARKWAY, SUITE 201
VIRGINIA BEACH, VIRGINIA 23454
P: 757.427.1020
7814 CAROUSEL LANE SUITE 200
RICHMOND, VIRGINIA 23294
P: 804.464.4111
SMMF Job No: 20.009-B
WWW.SMANDF.CO

0 4" 1' 2' 3' 4' 5'
3/4" = 1'-0" GRAPHIC SCALE

NOTE:
IF THIS DRAWING IS LESS THAN 34" X 22"
IT IS A REDUCED SIZE DRAWING

SYM	DESCRIPTION	DATE	APPR
	MOD P00006 AND MOD P00007	10/2025	
	MOD P00005	05/2023	

NAVFAC

COMMONWEALTH OF VIRGINIA
EARL H. INGE, JR.
Lic. No. 035522
1/13/2023
PROFESSIONAL ENGINEER

BAMFORTH
ENGINEERS + SURVEYORS

AE INFO

APPROVED
FOR COMMANDER NAVFAC 11/21/2025

ACTIVITY
Approved by J. Scott Roberts, Asset Management Branch Head & Supervisory Facility Planner, PWD Beaufort, SC via email.

SATISFACTORY TO DATE	12/15/2022
DES EHI	DRW JSC CHK DWS
PM/DM	KTB / RLH
BRANCH MANAGER	NEK
CHIEF ENG/ARCH	EJA
FP ENGINEER	DSN

DEPARTMENT OF THE NAVY
NAVAL FACILITIES ENGINEERING SYSTEMS COMMAND ~ MID-ATLANTIC
NORFOLK, VA
DC CORE
MCAS BEAUFORT
BEAUFORT, SC
P-475 AIRCRAFT MAINTENANCE HANGAR - VOLUME 4 (PARKING GARAGE OPTION)
FRAMING SECTIONS

SCALE:	3/4" = 1'-0"
EPROJECT NO.:	1363603
CONSTR. CONTR. NO.	
NAVFAC DRAWING NO.	12860306
SHEET	1085 OF 1412

PSF412

DRAWFORM REVISION: 25 AUGUST 2020

Autodesk Docs://2024 2 VMFAT 502 F35 Maintenance Hangar/PRNG P475 1363603-S.rvt
11/11/2025 11:32:49 AM

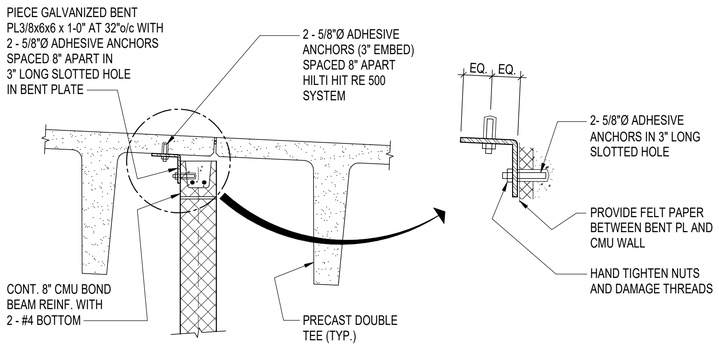

C1 TYPICAL NON-BEARING MASONRY WALL BRACING DETAIL
NOT TO SCALE

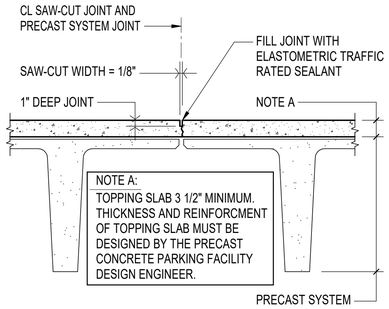

C3 TYPICAL TOPPING SLAB CONTROL JOINT DETAIL
NOT TO SCALE

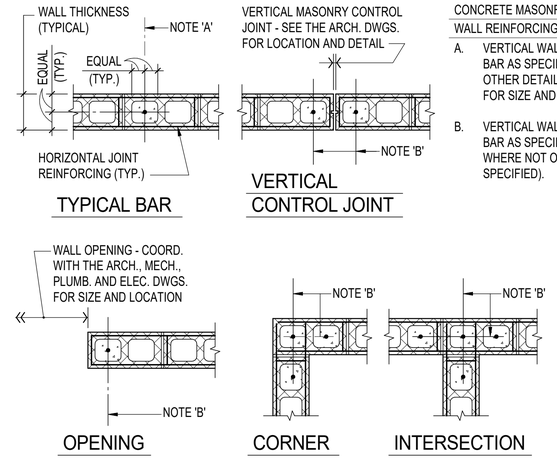

C4 TYPICAL CONCRETE MASONRY VERTICAL WALL REINFORCING DETAILS
NOT TO SCALE

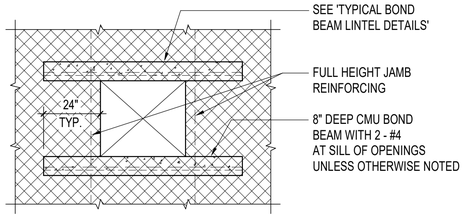

B1 TYPICAL REINFORCEMENT AT MASONRY WALL OPENING DETAIL
NOT TO SCALE

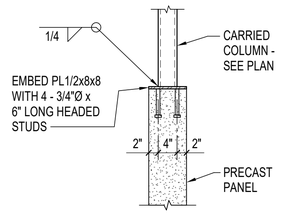

B2 TYPICAL CARRIED COLUMN DETAIL
NOT TO SCALE

BOND BEAM LINTEL SCHEDULE				
CLR SPAN	DEPTH "D"	REINFORCING		
		6" WIDE	8" AND 10" WIDE	12" WIDE
0 TO 3'-4"	8"	1 - #4 BOTTOM	2 - #4 BOTTOM	2 - #5 BOTTOM
3'-5" TO 5'-4"	8"	1 - #5 BOTTOM	2 - #5 BOTTOM	2 - #5 BOTTOM
5'-5" TO 6'-8"	16"	1 - #5 BOTTOM	2 - #5 BOTTOM	2 - #5 BOTTOM

BOND BEAM LINTEL SCHEDULE NOTES:

A. PROVIDE 8" CMU BEARING EACH END OF LINTEL.

B. FOR EXACT SIZE AND LOCATION OF ALL WALL OPENINGS COORDINATE WITH THE ARCHITECTURAL, MECHANICAL, PLUMBING AND ELECTRICAL DRAWINGS.

C. SEE THE ARCHITECTURAL DRAWINGS FOR WIDTH OF WALL AND REQUIRED WIDTH OF LINTEL, IF DIFFERENT FROM WIDTH OF WALL.

D. BOND BEAM LINTEL SCHEDULE APPLIES ONLY TO LINTELS NOT OTHERWISE SHOWN ON THE DRAWINGS.

E. DO NOT PLATE VERTICAL JOINT WITHIN 24" OF EDGE OF OPENING.

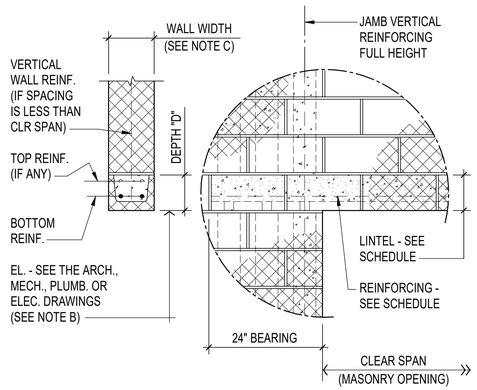

TYPICAL SECTION

TYPICAL JAMB ELEVATION

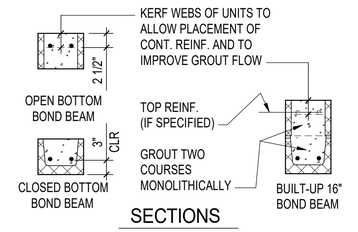

TYPICAL BOND BEAM REINFORCING

A1 TYPICAL BOND BEAM LINTEL DETAILS
NOT TO SCALE

NOTE: OFFSET JOISTS TO PROVIDE MINIMUM REQUIRED BEARING WHEREVER POSSIBLE. BUTT JOISTS END TO END OVER BEAM CL AND PROVIDE SPECIAL JOIST END PER S.J.I. REQUIREMENTS WHERE JOISTS MUST BE ALIGNED.

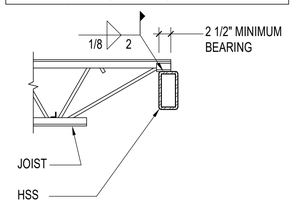

TYPICAL JOIST TO BEAM CONNECTION DETAIL
NOT TO SCALE

A4

SPEIGHT·MARSHALL·FRANCIS
STRUCTURAL ENGINEERS
1228 PERIMETER PARKWAY, SUITE 201
VIRGINIA BEACH, VIRGINIA 23454
P: 757.427.1020
7814 CAROUSEL LANE SUITE 200
RICHMOND, VIRGINIA 23294
P: 804.464.4111
WWW.SMANDF.CO
SMAF Job No. 20.009-B

NOTE:
IF THIS DRAWING IS LESS THAN 34" X 22"
IT IS A REDUCED SIZE DRAWING

APPR	DATE	DESCRIPTION	SYM
	10/2025	MOD P00006 AND MOD P00007	
	05/2023	MOD P00005	

NAVFAC

COMMONWEALTH OF VIRGINIA
EARL H. INGE, JR.
Lic. No. 035522
1/13/2023
PROFESSIONAL ENGINEER

BAMFORTH ENGINEERS + SURVEYORS

AE INFO

APPROVED
FOR COMMANDER NAVFAC

ACTIVITY
Approved by J. Scott Roberts; Asset Management Branch Head & Supervisory Facility Planner, PWD Beaufort, SC via email.

SATISFACTORY TO DATE 12/15/2022

DES	EHI	DRW	JSC	CHK	DWS

PM/DM KTB / RLH
BRANCH MANAGER NEK
CHIEF ENG/ARCH EJA
FP ENGINEER DSN

DEPARTMENT OF THE NAVY
NAVAL FACILITIES ENGINEERING SYSTEMS COMMAND
DC CORE
NAVAL FACILITIES ENGINEERING SYSTEMS COMMAND ~ MID-ATLANTIC
NORFOLK, VA
MCAS BEAUFORT
BEAUFORT, SC
P-475 AIRCRAFT MAINTENANCE HANGAR - VOLUME 4 (PARKING GARAGE OPTION)
TYPICAL DETAILS

SCALE: 3/4" = 1'-0"
EPROJECT NO.: 1363603
CONSTR. CONTR. NO.
NAVFAC DRAWING NO.: 12860307
SHEET 1086 OF 1412

PSF501

DRAWFORM REVISION: 25 AUGUST 2020

Autodesk Docs://2042 VAFAT 530 F33 Maintenance Hangar/PROG.PAT1.15KB003.5.rvt
11/11/2025 11:29:49 AM