GENERAL ABBREVIATIONS

# AND SYMBOLS	
#	NUMBER / POUND
&	AND
@	AT
A	
A	AIR
A/C	AIR CONDITIONED
A/E	ARCHITECT-ENGINEER
ACM	ASBESTOS-CONTAINING MATERIAL(S)
ACT	ACOUSTICAL CEILING TILE
AD	AREA DRAIN
ADA	AMERICANS WITH DISABILITIES ACT
AFF	ABOVE FINISHED FLOOR
AHJ	AUTHORITY HAVING JURISDICTION
AHU	AIR HANDLING UNIT
ALT	ALTERNATE
ALUM	ALUMINUM
AMP	AMPERE
AO	ACCESS OPENING
APPROX	APPROXIMATELY
ARCH	ARCHITECTURAL
B	
BAL	BALANCE
BD	BOARD
BKOP	BACK OF PRECAST / BACK OF PANEL
BLDG	BUILDING
BLK	BLANK
BM	BEAM
BO	BOTTOM OF
BOP	BOTTOM OF PRECAST
BOS	BOTTOM OF STEEL
BRG	BEARING
BTUH	BRITISH THERMO UNIT / HOUR
C	
CG	CORNER GUARD
CJ	CONTROL / CONSTRUCTION JOINT
CL	CENTER LINE / CLOSET
CLG	CEILING
CLL	COLUMN LINE
CLR	CLEAR
cm	CENTIMETER
CMU	CONCRETE MASONRY UNIT
CNTRL	CONTROL
CO2	CARBON DIOXIDE
COMM	COMMUNICATIONS
CONC	CONCRETE
COND	CONDITIONED
CONF	CONFERENCE
CONT	CONTINUED / CONTINUOUS
CONTR	CONTRACTOR
COORD	COORDINATE
CORR	CORRIDOR
CTJ	CONTRACTION JOINT
CTR	CENTER
D	
D	DEEP / DEPTH
dBA	UNIT OF SOUND
DEG	DEGREE
DIA	DIAMETER
DIMS	DIMENSIONS
DN	DOWN
DR	DOOR
DWG	DRAWING(S)
DWR	DRAWER

GENERAL ABBREVIATIONS

E	
EA	EACH
EE	EACH END
EJ	EXPANSION JOINT
EL	ELEVATION
ELEC	ELECTRICAL
EOS	EDGE OF SLAB
EQ	EQUAL
EQUIP	EQUIPMENT
ETC	ET CETERA
ETR	EXISTING TO REMAIN
EWC	ELECTRIC WATER COOLER
EWS	EYE WASH STATION
EXIST	EXISTING
F	
F	FILLER
FAX	FACSIMILE
FE	FIRE EXTINGUISHER
FEC	FIRE EXTINGUISHER CABINET
FF	FINISHED FLOOR
FHC	FIRE HOSE CABINET
FIN	FINISHED
FLR	FLOOR
FO	FACE OF
FOS	FACE OF SLAB / FACE OF STUD
FP	FIRE PROTECTION
FT	FOOT / FEET
G	
G	GAS
GA	GAGE
GALV	GALVANIZED
GB	GRAB BAR
GC	GENERAL CONTRACTOR
H	
H	HIGH
HC	HANDICAP
HDWR	HARDWARE
HE	HORIZONTAL EXIT
HM	HOLLOW METAL
HR	HOUR
I	
IC	INTERCOM
ID	INSIDE DIAMETER
IDS	INTRUSION DETECTION SYSTEM
IMP	INSULATED METAL PANEL
IN	INCH(ES)
INFO	INFORMATION
INV	INVERTER
J	
JAN	JANITOR
JT	JOINT
K	
kPA	KILOPASCAL
L	
LB	POUND
LF	LINEAR FEET
LG	LARGE
LKR	LOCKER(S)
LL	ANGLE

GENERAL ABBREVIATIONS

M	
M	MEN'S
m	METERS
MAINT	MAINTENANCE
MAX	MAXIMUM
MECH	MECHANICAL
MED	MEDIUM
MFR	MANUFACTURER
MIN	MINIMUM
MISC	MISCELLANEOUS
mm	MILLIMETERS
MO	MASONRY OPENING
MTL	METAL
N	
N	NORTH
N/A	NOT APPLICABLE
NIC	NOT IN CONTRACT
NO	NUMBER
NOM	NOMINAL
NTS	NOT TO SCALE
O	
OC	ON CENTER
OD	OUTSIDE DIAMETER
OFF	OFFICE
OPH	OPPOSITE HAND
OPNG	OPENING
OSF	OPERATION SUPPORT FACILITY
P	
P.D.	PANEL DIMENSION
PL	PLATE
PLAM	PLASTIC LAMINATE
PR	PAIR
PSF	POUNDS per SQUARE FOOT
PSI	POUNDS per SQUARE INCH
PT	PRESSURE TREATED / PAINT
Q	
QTR	QUARTER
QTY	QUANTITY
R	
R	RISER / RADIUS
R.O.	ROUGH OPENING
RAL	FEDERAL COLOR PALETTE
RCP	REFLECTED CEILING PLAN
RE	RESIDENT ENGINEER
RECY	RECYCLING
REQ	REQUIRED
RM	ROOM
RO	ROUGH OPENING
RTN	RETURN
S	
S	SOUTH / SINK
SEC	SECONDARY
SF	SQUARE FEET
SHWR	SHOWER
SIM	SIMILAR
SJ	SEISMIC JOINT
SPECS	SPECIFICATION
SQ	SQUARE
SST	STAINLESS STEEL
ST	STAINED
STC	SOUND TRANSMISSION CLASS
STDT	STUDY
STL	STEEL
STOR	STORAGE
SWGR	SWITCHGEAR

GENERAL ABBREVIATIONS

T	
T	TREAD
TEL	TELEPHONE
TEMP	TEMPERATURE / TEMPORARY
THD	THRESHOLD
THK	THICKNESS
THRU	THROUGH
TLT	TOILET
TO	TOP OF
TOC	TOP OF CONCRETE (CURB)
TOF	TOP OF FOOTING
TOM	TOP OF MASONRY
TOP	TOP OF PRECAST
TOS	TOP OF STEEL
TYP	TYPICAL
U	
U	HEAT TRANSFER COEFFICIENT
U/C/B	UNDER COUNTER BASE
UC	UNDERCUT
UL	UNDERWRITERS LABORATORY
UNO	UNLESS NOTED OTHERWISE
UR	URINAL
V	
V	VACUUM
VAR	VARIES
VCT	VINYL COMPOSITION TILE
VERT	VERTICAL
VEST	VESTIBULE
VTR	VENT THRU ROOF
W	
W	WEST
W	WIDTH
W	WOMEN'S
W/	WITH
W/O	WITHOUT
WD	WOOD
WH	WALL HUNG / WATER HEATER
WP	WATERPROOF / WORKING UNIT
WT	WEIGHT
WWF	WELDED WIRE FABRIC

GENERAL SYMBOLS

00 VIEW NAME
0/0" = 1'-0"

A1 / AE101 — EXTERIOR ELEVATION REFERENCE

1 Ref / ←Ref / AE101 / →Ref / 1 Ref — INTERIOR ELEVATION REFERENCE

A1 / AE312 — SECTION REFERENCE

DETAIL / SECTION NUMBER
A1 / AE101 — REFERENCE FOR DETAIL OR ENLARGED PLAN
SHEET NUMBER

1239 — ROOM NUMBER
STORAGE — ROOM NAME LINE 1
STORAGE — ROOM NAME LINE 2

092900.A01 — MATERIAL NOTES
INDEPENDANT SUFFIX MATERIAL OR NOTE SPECIFIER FOR CONDOC LIST
SPECIFICATION SECTION PREFIX

LEADER OR NOTATION

00 — NEW COLUMN REFERENCE AND GRID LINES

VAPOR BARRIER (DETAILS)

LATH (DETAILS)

BITUMINOUS DAMPROOFING (DETAILS)

WORK ABOVE (PLANS)

REF. LINE
SEE 00/0-00-000 — PARTIAL PLAN REFERENCE LINE

BUILDING LEVEL OR ELEVATION. ALL BUILDINGS HAVE FIRST FLOOR SET AT 0'-0". COORDINATE WITH CIVIL DRAWINGS FOR FLOOR LEVEL RELATIVE TO SITE AND EACH OTHER.

SPOT ELEVATION RELATED TO DISTANCE ABOVE FIRST FLOOR

BREAK LINE

00 — REVISION IDENTIFIER

00 — KEY NOTE

℄ — CENTERLINE

PLAN NORTH N
PLAN NORTH
TRUE NORTH

TYPICAL SHEET NUMBER FORMAT

PAE100A1
- MAXIMUM OF 8 CHARACTERS
- SHEET SEQUENCE NUMBER
- SHEET TYPE
- LEVEL 2, DISCIPLINE DESIGNATOR
- BUILDING IDENTIFIER PREFIX, REFER TO BUILDING IDENTIFIER PREFIX LEGEND

BUILDING IDENTIFIER PREFIX LEGEND	
BUILDING NAME	BUILDING PREFIX
BUILDING 414	M
BUILDING 727	N
OSF / ANNEX	O
PARKING GARAGE	P
HANGAR	-

ARCHITECTURAL SYMBOLS

00 — GLAZING AND LOUVER PREFIXES
W = WINDOW
L = LOUVER
B = BORROWED LITE
S = STOREFRONT
G = GATE
C = CURTAINWALL
T = TRANSLUCENT PANEL

00 — PRECAST WALL PANEL

PARTITION TYPE NAMING CONVENTION

A3AC.1
- PARTITION SYMBOL ON PLAN
- PARTITION TYPE SYMBOL
- **FIRE RATING**
- **MODIFIERS**
- **STUD OR CMU SIZE**
- **ASSEMBLY TYPE**

101.1 — DOOR NUMBERS: THE PRIMARY DOOR NUMBER IS THE ROOM NUMBER. A DECIMAL IS ADDED TO DISTINGUISH ADDITIONAL DOORS IN THE ROOM.

PARTITION LEGEND

1 HOUR FIRE BARRIER

NOTE:
IF THIS DRAWING IS LESS THAN 34" X 22"
IT IS A REDUCED SIZE DRAWING

SYM	DESCRIPTION	DATE	APPR
1	MOD P00005	05/2023	
2	MOD P00006 AND MOD P00007	10/2025	

NAVFAC

STATE OF FLORIDA
BILLY KEITH HOLLOWAY
AR93022
REGISTERED ARCHITECT
SEAL

BAMFORTH
ARCHITECTURE ENGINEERING CONSULTANTS
AE INFO

APPROVED
FOR COMMANDER NAVFAC 11/21/2025

ACTIVITY: Approved by J. Scott Roberts, Asset Management Branch Head & Supervisory Facility Planner, PWD Beaufort, SC via email.

SATISFACTORY TO DATE	12/15/2022
DES EAD	DRW MEC / CHK BKH
PM/DM	KTB / RLH
BRANCH MANAGER	CGM
CHIEF ENG/ARCH	EJA
FP ENGINEER	DSN

DEPARTMENT OF THE NAVY
NAVAL FACILITIES ENGINEERING SYSTEMS COMMAND
DC CORE
NAVAL FACILITIES ENGINEERING SYSTEMS COMMAND – MID-ATLANTIC NORFOLK, VA
MCAS BEAUFORT BEAUFORT, SC
P-475 AIRCRAFT MAINTENANCE HANGAR - VOLUME 3 (OSF OPTION)
ARCHITECTURAL ABBREVIATIONS AND SYMBOLS

SCALE:	As indicated
EPROJECT NO.:	1363603
CONSTR. CONTR. NO.	
NAVFAC DRAWING NO.	12860131
SHEET	930 OF 1412

OAE001

DRAWFORM REVISION: 25 AUGUST 2020

Autodesk Docs://20042 MFA T 503 F35 Maintenance Hangar/20042 F35 Maint Hangar_OSF Shop Annex.rvt
11/3/2025 9:08:39 PM

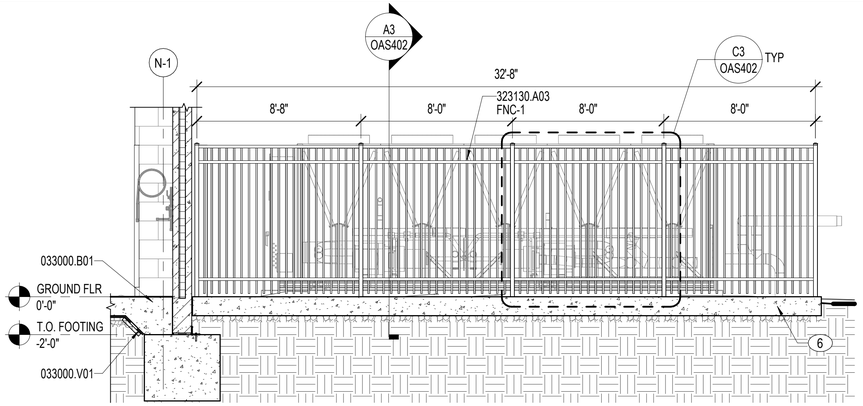

D1 NORTH ELEVATION

1/4" = 1'-0"

OAS401

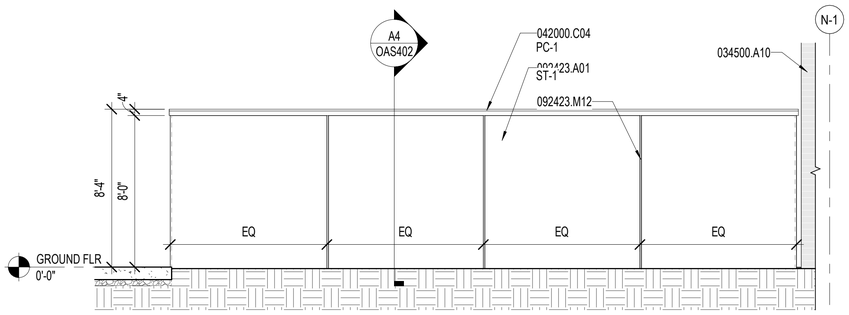

B1 SOUTH ELEVATION

1/4" = 1'-0"

OAS401, VOLUME 6: OAS401Z

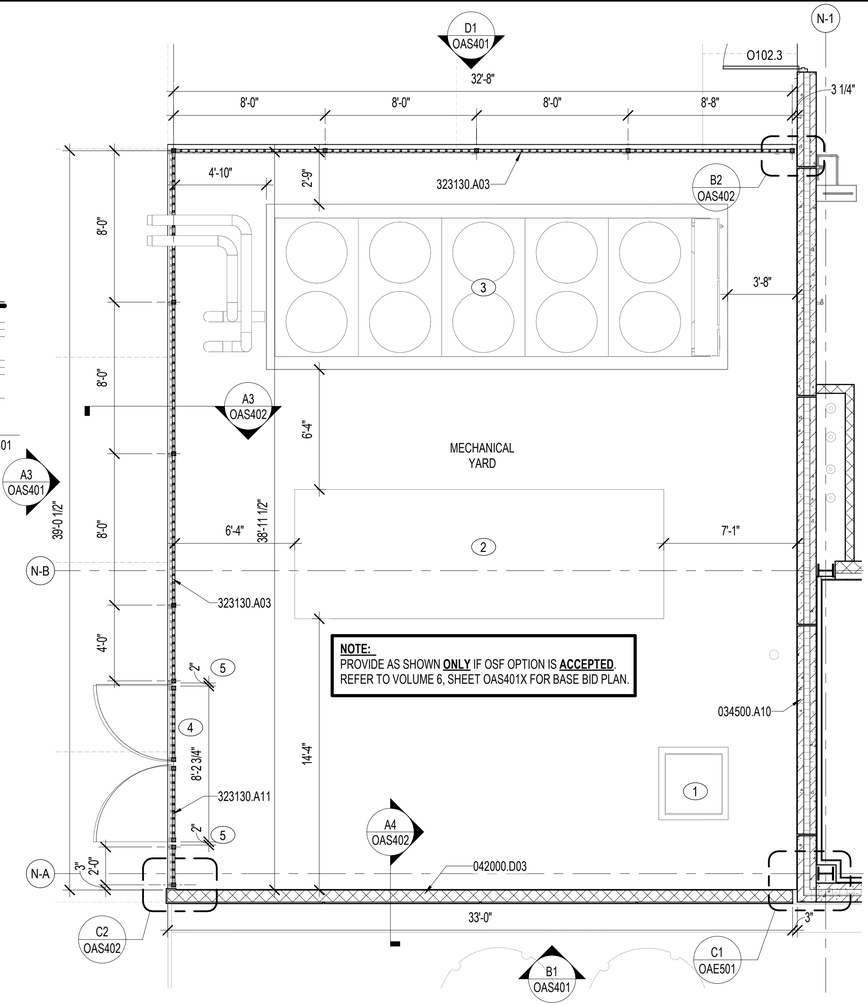

NOTE:
PROVIDE AS SHOWN **ONLY** IF OSF OPTION IS **ACCEPTED**.
REFER TO VOLUME 6, SHEET OAS401X FOR BASE BID PLAN.

B3 ENLARGED PLAN - MECHANICAL YARD

1/4" = 1'-0"

VOLUME 1: AS100 AND AS101A, OAE101

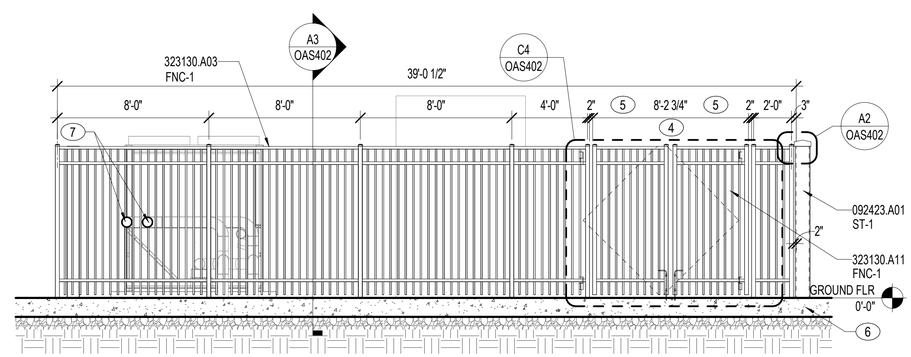

A3 EAST ELEVATION

1/4" = 1'-0"

OAS401, VOLUME 6: OAS401Z

NOTES:

SHEET NOTES:

A REFER TO SHEET OAE001 FOR GENERAL ABBREVIATIONS AND ARCHITECTURAL SYMBOLS.

B ARCHITECTURAL ELEVATION FOR GROUND FLOOR TOP OF SLAB IS DEFINED AS 0'-0". REFER TO CIVIL PLANS FOR SLAB ELEVATIONS RELATIVE TO NORTH AMERICAN VERTICAL DATUM (NAVD) SYSTEM.

C REFER TO VOLUME 1, SHEETS AS100 AND AS101A FOR ARCHITECTURAL SITE PLAN.

D REFER TO VOLUME 1, SHEETS CS014 AND CG104 FOR SITE LAYOUT AND GRADING INFORMATION.

E REFER TO VOLUME 1, SHEET LP104 FOR LANDSCAPE AND HARDSCAPE INFORMATION.

F REFER TO VOLUME 1, SHEET ES406 FOR MECHANICAL YARD ELECTRICAL EQUIPMENT PLAN.

G REFER TO VOLUME 1, SHEET MS102 FOR MECHANICAL YARD MECHANICAL EQUIPMENT PLAN.

KEY NOTES (00)

1 LOAD BANK DISCONNECT CABINET AND CONCRETE PAD. REFER TO VOLUME 1, SHEETS ES406 AND EP602 FOR ADDITIONAL INFORMATION.

2 GENERATOR ON CONCRETE PAD. REFER TO VOLUME 1, SHEET ES406 FOR ADDITIONAL INFORMATION.

3 CHILLER ON CONCRETE PAD. REFER TO VOLUME 1, SHEET MS102 FOR ADDITIONAL INFORMATION.

4 DECORATIVE METAL FENCE DOUBLE SWING GATE. REFER TO DETAIL C4/OAS402 FOR GATE ELEVATION AND HARDWARE INFORMATION.

5 HINGE CLEARANCE.

6 CONCRETE PAVEMENT, 12" THICK, OVER 4" (MIN) AGGREGATE BASE COURSE. REFER TO VOLUME 1, SHEET CS104, FOR ADDITIONAL INFORMATION.

7 6" EMERGENCY CONNECTION. COORDINATE FENCE OPENINGS.

MATERIAL NOTES

033000.B01	CONCRETE SLAB
033000.V01	VAPOR RETARDER
034500.A10	PRECAST CONCRETE INSULATED WALL PANEL
042000.C04	PRECAST CONCRETE COPING
042000.D03	CMU 8"
092423.A01	STUCCO
092423.M12	REVEAL MOLDING
323130.A03	DECORATIVE METAL FENCE
323130.A11	DOUBLE SWING GATE

EXTERIOR FINISH LEGEND

PC-1	ARCHITECTURAL PRECAST CONCRETE SANDBLAST LIGHT - PCI 110

ADDITIONAL FINISHES:

FNC-1	EXTERIOR METAL FENCE RAL 7044
ST-1	STUCCO STUCCO TO MATCH SW 6072 VERSATILE GRAY

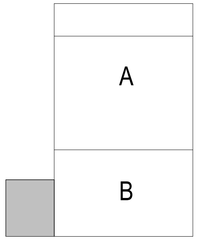

KEYPLAN

0 1' 5' 10' 15'

1/4" = 1'-0" GRAPHIC SCALE

NOTE:
IF THIS DRAWING IS LESS THAN 34" X 22"
IT IS A REDUCED SIZE DRAWING

SYM	DESCRIPTION	DATE	APPR
1	MOD P00005	05/2023	
2	MOD P00006 AND MOD P00007	10/2025	

NAVFAC

STATE OF FLORIDA
BILLY KEITH HOLLOWAY
AR93022
REGISTERED ARCHITECT
SEAL

BAMFORTH
CONSULTING ARCHITECTS

AE INFO

APPROVED
FOR COMMANDER NAVFAC 11/21/2025

ACTIVITY Approved by J. Scott Roberts, Asset Management Branch Head & Supervisory Facility Planner, PWD Beaufort, SC via email.

SATISFACTORY TO DATE	12/15/2022
DES EAD DRW MEC CHK BKH	
PMDM	KTB / RLH
BRANCH MANAGER	CGM
CHIEF ENG/ARCH	EJA
FP ENGINEER	DSN

DEPARTMENT OF THE NAVY
NAVAL FACILITIES ENGINEERING SYSTEMS COMMAND
DC CORE
MCAS BEAUFORT

NAVAL FACILITIES ENGINEERING SYSTEMS COMMAND - MID-ATLANTIC
NORFOLK, VA

BEAUFORT, SC
P-475 AIRCRAFT MAINTENANCE HANGAR - VOLUME 3 (OSF OPTION)

OSF / SHOP ANNEX - MECHANICAL YARD PLAN AND ELEVATIONS

SCALE:	As indicated
EPROJECT NO.:	1363603
CONSTR. CONTR. NO.	
NAVFAC DRAWING NO.	12860132
SHEET	931 OF 1412

OAS401

DRAWFORM REVISION 25 AUGUST 2020

Autodesk Docs://00042 MFA F 503 F35 Maintenance Hangar/00042 F35 Maint Hangar - OSF Shop Annex.rvt
11/4/2025 4:36:57 PM

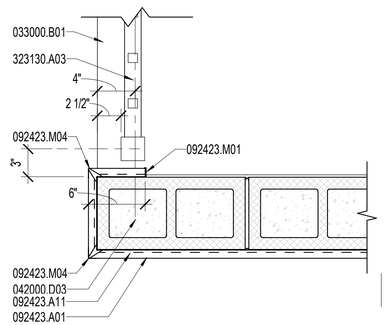

C2 PLAN DETAIL

1 1/2" = 1'-0" OAS401X

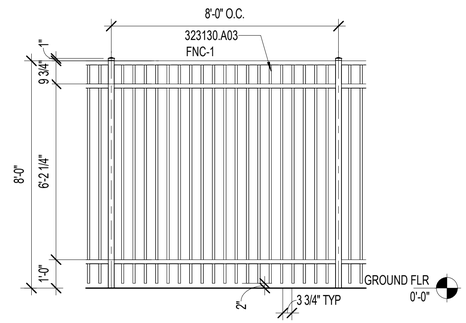

C3 TYPICAL FENCE PANEL

3/8" = 1'-0" OAS401, VOLUME 6: OAS401X

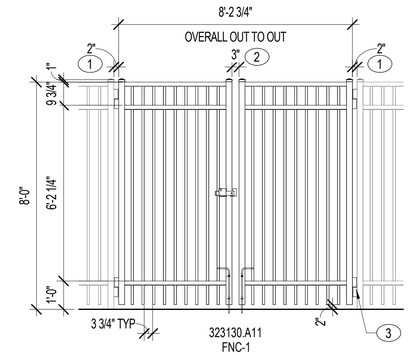

GATE HARDWARE:

* PROVIDE PLATE-WELDED LATCHES WITH INTERLOCKING COMPONENTS TO MEET BASE SECURITY STANDARDS.
* PROVIDE FOOT BOLTS WITH HOLD IN POSITION SLOTS. PROVIDE SLEEVE FOR FOOT BOLT IN OPEN AND CLOSED POSITION (BOTH SIDES).

C4 GATE ELEVATION

3/8" = 1'-0" OAS401, VOLUME 6: OAS401X

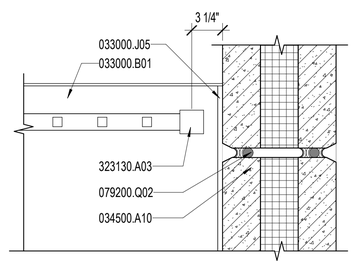

B2 PLAN DETAIL

1 1/2" = 1'-0" OAS401X

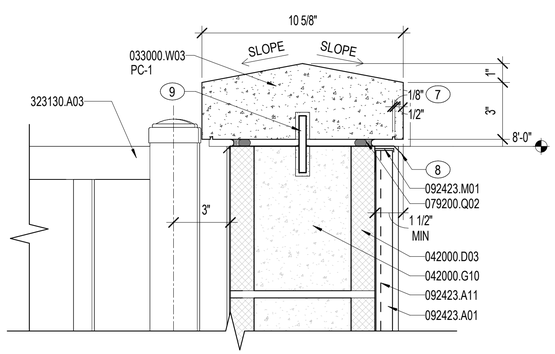

A2 MASONRY CAP DETAIL

3" = 1'-0" OAS402

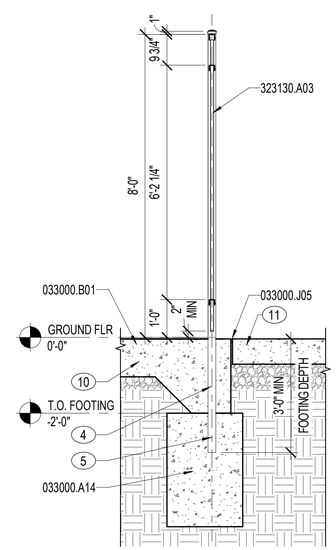

A3 FENCE SECTION

1/2" = 1'-0" OAS401, VOLUME 6: OAS401X

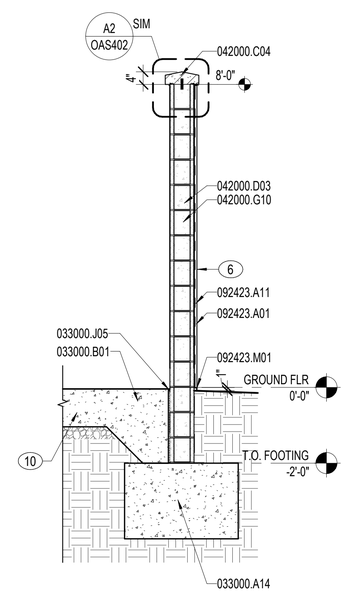

A4 WALL SECTION

1/2" = 1'-0" OAS401, VOLUME 6: OAS401X

NOTES:

SHEET NOTES:

A REFER TO SHEET OAE001 FOR GENERAL ABBREVIATIONS AND ARCHITECTURAL SYMBOLS.

B ARCHITECTURAL ELEVATION FOR GROUND FLOOR TOP OF SLAB IS DEFINED AS 0'-0". REFER TO CIVIL PLANS FOR SLAB ELEVATIONS RELATIVE TO NORTH AMERICAN VERTICAL DATUM (NAVD) SYSTEM.

C REFER TO VOLUME 1, SHEETS AS100 AND AS101A FOR ARCHITECTURAL SITE PLAN.

D REFER TO VOLUME 1, SHEETS CS014 AND CG104 FOR SITE LAYOUT AND GRADING INFORMATION.

E REFER TO VOLUME 1, SHEET LP104 FOR LANDSCAPE AND HARDSCAPE INFORMATION.

F REFER TO VOLUME 1, SHEET ES406 FOR MECHANICAL YARD ELECTRICAL EQUIPMENT PLAN.

G REFER TO VOLUME 1, SHEET MS102 FOR MECHANICAL YARD MECHANICAL EQUIPMENT PLAN.

KEY NOTES (00)

1 HINGE CLEARANCE.
2 LATCH CLEARANCE.
3 WELDED ON BOXED HINGE.
4 EMBEDDED POST BELOW GRADE.
5 CONCRETE POLE FOOTING.
6 PAINTED.
7 SAW-CUT DRIP, ON BOTH SIDES OF WALL CAP.
8 STAINLESS STEEL DRIP FLASHING ON BOTH SIDES OF CAP. PROVIDE SEALANT BELOW DRIP.
9 STAINLESS STEEL ROD WITH SEALANT AROUND PENETRATIONS THRU FLASHING.
10 CONCRETE PAVEMENT, 12" THICK, OVER 4" (MIN) AGGREGATE BASE COURSE. REFER TO VOLUME 1, SHEET CS104, FOR ADDITIONAL INFORMATION.
11 8" CONC. SLAB AND AGGREGATE BASE COURSE.

MATERIAL NOTES

033000.A14	GRADE BEAM
033000.B01	CONCRETE SLAB
033000.J05	PREFORMED JOINT FILLER
033000.W03	DOWELS
034500.A10	PRECAST CONCRETE INSULATED WALL PANEL
042000.C04	PRECAST CONCRETE COPING
042000.D03	CMU 8"
042000.G10	GROUT SOLID
079200.Q02	BACKSTOP AND SEALANT
092423.A01	STUCCO
092423.A11	SELF FURRING DIAMOND MESH LATH
092423.M01	CASING BEAD
092423.M04	CORNERBEAD
323130.A03	DECORATIVE METAL FENCE
323130.A11	DOUBLE SWING GATE

0 2" 4" 8" 1'
3" = 1'-0" GRAPHIC SCALE

0 6" 1' 2'
1½" = 1'-0" GRAPHIC SCALE

0 1' 2' 4' 6' 8' 10'
3/8" = 1'-0" GRAPHIC SCALE

0 1' 2' 4' 6' 8'
1/2" = 1'-0" GRAPHIC SCALE

NOTE:
IF THIS DRAWING IS LESS THAN 34" X 22"
IT IS A REDUCED SIZE DRAWING

SYM	DESCRIPTION	DATE	APPR
1	MOD P00005	05/2023	
2	MOD P00006 AND MOD P00007	10/2025	

NAVFAC

STATE OF FLORIDA
BILLY KEITH HOLLOWAY
AR93022
11.13.23
REGISTERED ARCHITECT
SEAL

BAMFORTH
ARCHITECTURE & ENGINEERING

AE INFO

APPROVED
FOR COMMANDER NAVFAC 11/21/2025

ACTIVITY
Approved by J. Scott Roberts,
Asset Management Branch Head &
Supervisory Facility Planner, PWD
Beaufort, SC via email.

SATISFACTORY TO DATE 12/15/2022

DES	EAD	DRW MCL	CHK BKH
PMDM			KTB / RLH
BRANCH MANAGER			CGM
CHIEF ENG/ARCH			EJA
FP ENGINEER			DSN

DEPARTMENT OF THE NAVY
NAVAL FACILITIES ENGINEERING SYSTEMS COMMAND
DC CODE:
NAVAL FACILITIES ENGINEERING SYSTEMS COMMAND ~ MID-ATLANTIC
NORFOLK, VA
MCAS BEAUFORT
BEAUFORT, SC
P-475 AIRCRAFT MAINTENANCE HANGAR - VOLUME 3 (OSF OPTION)
OSF / SHOP ANNEX - MECHANICAL YARD WALL SECTIONS AND DETAILS

SCALE: As indicated
EPROJECT NO.: 1363603
CONSTR. CONTR. NO.
NAVFAC DRAWING NO. 12860133
SHEET 932 OF 1412

OAS402

DRAWFORM REVISION 25 AUGUST 2020

Autodesk Docs://20042 MIFAT 552 F53 Maintenance Hangar/20042 F53 Maint Hangar_OSF Shop Annex.rvt
11/3/2025 9:11:36 PM

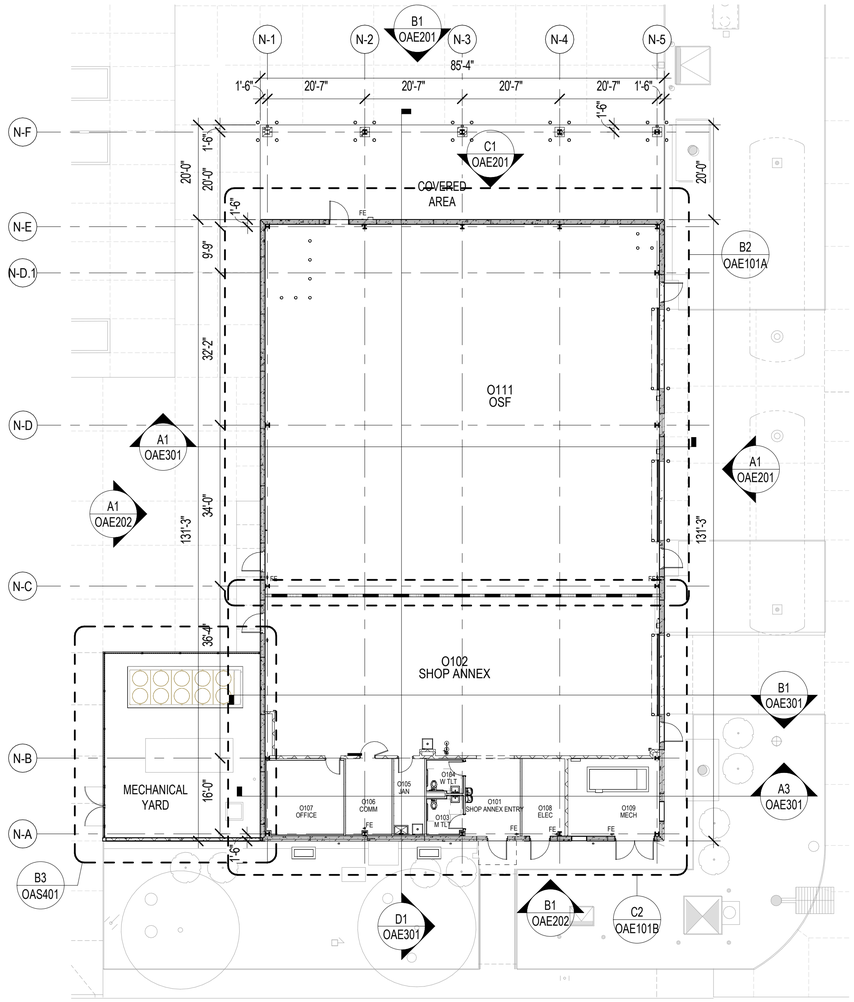

A1 FLOOR PLAN - GROUND FLOOR - OVERALL

1/16" = 1'-0"

OAE101A, OAE101B

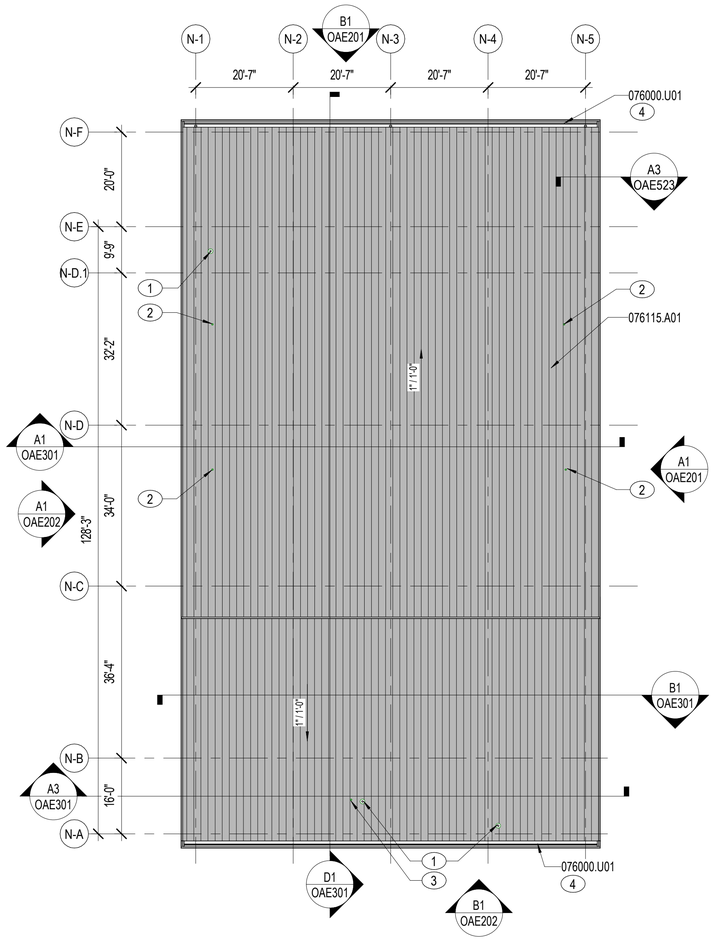

A3 ROOF PLAN - OVERALL

1/16" = 1'-0"

NOTES:

SHEET NOTES:

A REFER TO SHEETS OAE001 FOR GENERAL ABBREVIATIONS AND ARCHITECTURAL SYMBOLS.

B REFER TO VOLUME 1, SHEETS AS100 AND AS101A FOR ARCHITECTURAL SITE PLAN.

C REFER TO VOLUME 1, SHEETS CS104 AND CG104 FOR SITE LAYOUT AND GRADING INFORMATION.

D REFER TO VOLUME 1, SHEETS LP104 AND LF101 FOR LANDSCAPE, HARDSCAPE, SITE FURNISHING INFORMATION.

E REFER TO SHEET OGC001 FOR CODE SUMMARY AND OGC101 FOR LIFE SAFETY PLAN.

F REFER TO SHEETS OAE101A-OAE101B FOR PARTITION TYPES.

G REFER TO SHEETS OAE471-OAE472 FOR AIR BARRIER DIAGRAMS.

H SLOPED ROOFING COMPOSITION IS AN ALUMINUM STANDING SEAM METAL ROOFING PANEL ON 5/8" GLASS MAT COVER BOARD OVER 4" POLYISOCYANURATE RIGID BOARD INSULATION ON METAL DECK. REFER TO SPECIFICATION SECTION 07 61 15. REFER TO STRUCTURAL DRAWINGS FOR DECK INFORMATION.

I R-VALUE FOR ALL ROOF INSULATION IS TO BE EQUAL TO R-25 MINIMUM CONTINUOUS. INSULATION FOR DESIGN PURPOSES IS BASED ON 1" POLYISOCYANURATE INSULATION = R-6.

J ARROWS ON ROOF PLAN INDICATE ROOF SLOPE. STANDING SEAM METAL ROOF TO BE 1" PER FOOT MINIMUM.

K ARCHITECTURAL EXTERIOR DIMENSIONS ARE TO EXTERIOR FACE OF INSULATED PRECAST PANEL AND FACE OF METAL STUD, UNO.

KEY NOTES (00)

1 VTR. REFER TO SHEET OPP101A-OPP101B FOR ADDITIONAL INFORMATION. REFER TO C3/OAE541 FOR ROOF PENETRATION DETAIL.

2 RADIANT HEATER VENT. REFER TO SHEET OMH101A AND OMH502 FOR ADDITIONAL INFORMATION. REFER TO C3/OAE541 FOR ROOF PENETRATION DETAIL.

3 WATER HEATER FLUE. REFER TO SHEET OMH101B FOR ADDITIONAL INFORMATION. REFER TO SHEET C3/OAE541 FOR ROOF PENETRATION DETAIL.

4 CONCEALED GUTTER.

MATERIAL NOTES

076000.U01 GUTTER

076115.A01 STANDING-SEAM METAL ROOF PANEL

PLUMBING FIXTURE SUMMARY OSF / SHOP ANNEX

FIXTURE COUNT PROVIDED [PER PROGRAM FOR DESIGN] (PFD)

RESTROOMS:
- MALE:
  - GROUND FLOOR:
    - (1) WATER CLOSETS
    - (1) LAVATORIES
- FEMALE:
  - GROUND FLOOR:
    - (1) WATER CLOSETS
    - (1) LAVATORIES

(1) "HI-LO" WATER FOUNTAINS WITH BOTTLE FILLER PROVIDED

(1) SERVICE SINKS PROVIDED

FIXTURE COUNT REQUIRED

UFC 3-420-01 - APPENDIX A-3, CHAPTER 4-D AND TABLES 403.1 AND 403.2

TOTAL NUMBER OF EMPLOYEES: **34**

PER TABLE 403.1 AND TABLE 403.2:

MINIMUM NUMBER OF FIXTURES REQUIRED PER TABLE 403.1 AND 403.2
- (2) WATER CLOSETS
- (2) LAVATORIES
- (1) DRINKING FOUNTAINS

FOR NAVY FACILITIES (CHAPTER 4-D):
OCCUPANCY: "BUSINESS"

MINIMUM NUMBER OF FIXTURES REQUIRED FOR NAVY FACILITIES
- (2) WATER CLOSETS
- (2) LAVATORIES
- (1) DRINKING FOUNTAINS
- (1) SERVICE SINK

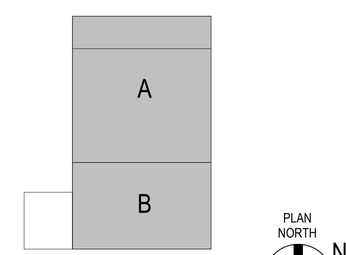

KEYPLAN

0 10' 20' 40' 60'

1/16" = 1'-0" GRAPHIC SCALE

NOTE:
IF THIS DRAWING IS LESS THAN 34" X 22"
IT IS A REDUCED SIZE DRAWING

SYM	DESCRIPTION	DATE	APPR
1	MOD P00005	05/2023	
2	MOD P00006 AND MOD P00007	10/2025	

NAVFAC

STATE OF FLORIDA
BILLY KEITH HOLLOWAY
AR93022
REGISTERED ARCHITECT
SEAL

BAMFORTH
ENGINEERS + SURVEYORS

AE INFO

APPROVED
FOR COMMANDER NAVFAC 11/21/2025

ACTIVITY: Approved by J. Scott Roberts, Asset Management Branch Head & Supervisory Facility Planner, PWD Beaufort, SC via email.

SATISFACTORY TO DATE 12/15/2022

DES EAD	DRW KJF	CHK BKH	
PM/DM	KTB / RLH		
BRANCH MANAGER	CGM		
CHIEF ENG/ARCH	EJA		
FP ENGINEER	DSN		

DEPARTMENT OF THE NAVY
NAVAL FACILITIES ENGINEERING SYSTEMS COMMAND ~ MID-ATLANTIC
NORFOLK, VA
DC CORE
MCAS BEAUFORT
BEAUFORT, SC

P-475 AIRCRAFT MAINTENANCE HANGAR - VOLUME 3 (OSF OPTION)

OSF / SHOP ANNEX - FLOOR PLAN AND ROOF PLAN - OVERALL

SCALE: As indicated

EPROJECT NO.: 1363603

CONSTR. CONTR. NO.

NAVFAC DRAWING NO. 12860134

SHEET 933 OF 1412

OAE101

DRAWFORM REVISION: 25 AUGUST 2020

Autodesk Docs://20042 MIFAT 502 F35 Maintenance Hangar/20042 F35 Maintenance Hangar_OSF Shop Annex.rvt
11/3/2025 9:08:42 PM

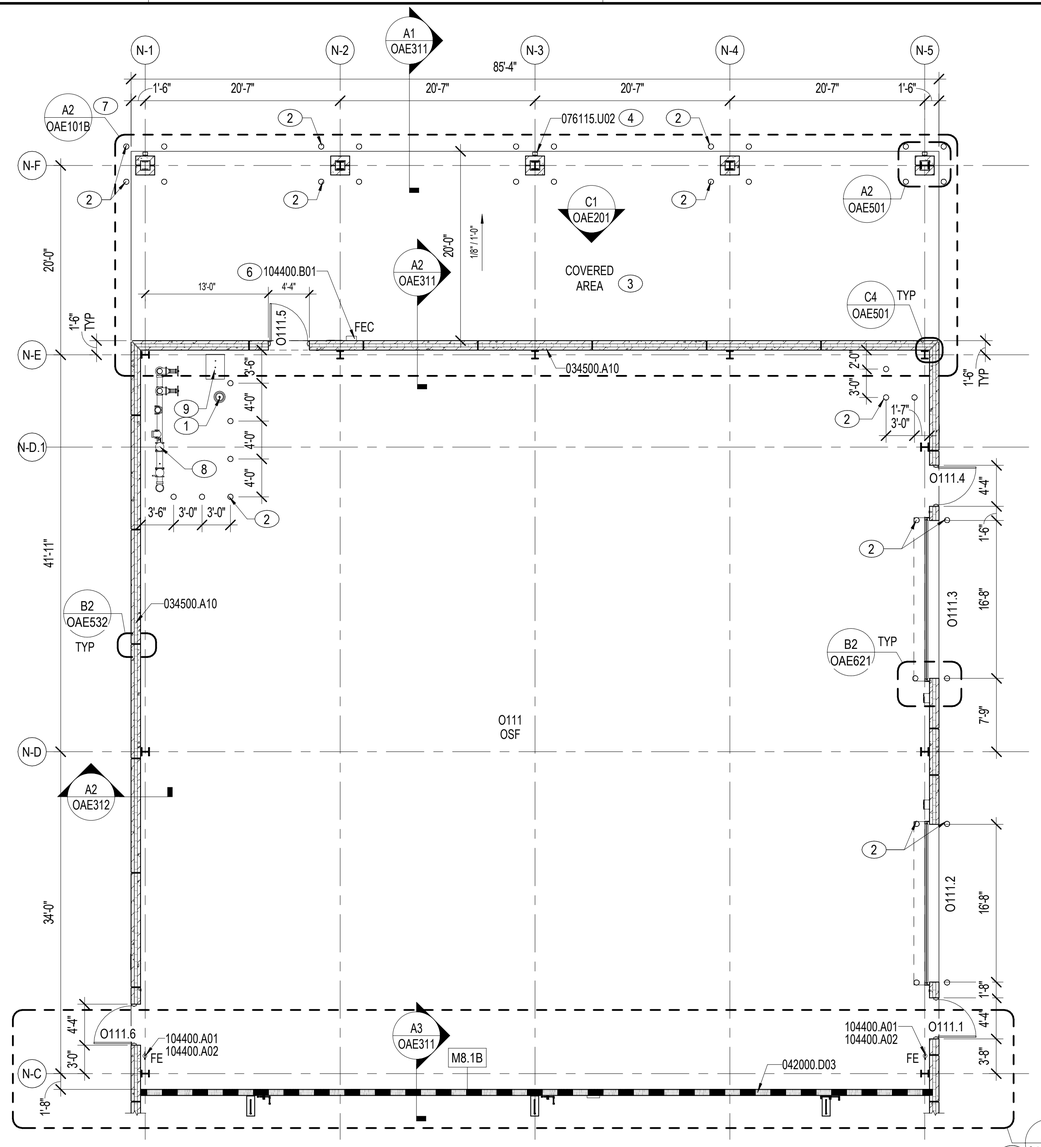

B2 FLOOR PLAN - GROUND FLOOR - SECTOR A

1/8" = 1'-0"

OAE101

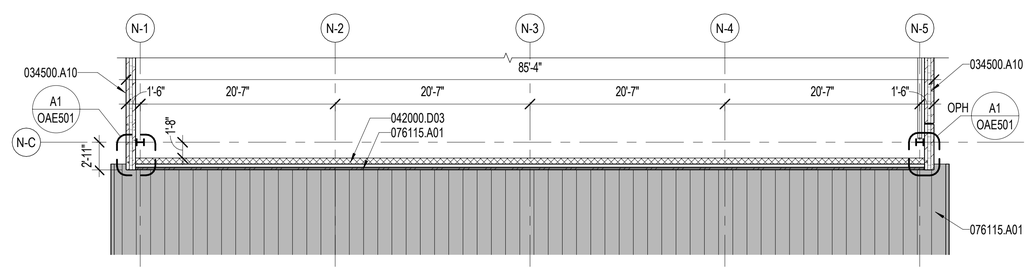

A2 FLOOR PLAN - HIGH WALL

1/8" = 1'-0"

OAE101A

NOTES:

SHEET NOTES:

A REFER TO SHEET OAE001 FOR GENERAL ABBREVIATIONS AND ARCHITECTURAL SYMBOLS.

B DASHED LINES REPRESENT ITEMS ABOVE.

C ARCHITECTURAL EXTERIOR DIMENSIONS ARE TO EXTERIOR FACE OF INSULATED PRECAST PANEL AND FACE OF METAL STUD, UNO.

D ARCHITECTURAL DIMENSIONS ARE TO COLUMN GRID, FACE OF MASONRY / CONCRETE, FACE OF METAL STUD, UNO.

E REFER TO SHEET OGC001 FOR CODE SUMMARY AND OGC101 FOR LIFE SAFETY PLAN.

F REFER TO SHEET OAE101 FOR OVERALL ELEVATION AND BUILDING SECTION REFERENCES.

G REFER TO SHEET OAE601 FOR DOOR SCHEDULE, DOOR/FRAME ELEVATIONS, TRANSLUCENT PANEL ELEVATIONS, AND LOUVER ELEVATIONS.

H REFER TO SHEETS OAE621-OAE622 FOR DOOR DETAILS AND SHEET OAE631 FOR LOUVER AND TRANSLUCENT PANEL DETAILS.

I EXTERIOR WALL FURRING TO BE PARTITION TYPE B2, UNO. REFER TO SHEET OAE801 FOR PARTITION TYPES.

J PARTITIONS TO BE M8, UNO. REFER TO SHEET OAE801 FOR PARTITION TYPES.

K REFER TO SHEET OAE821 FOR THROUGH PENETRATION FIRESTOP SYSTEM SCHEDULE.

L REFER TO SHEET OAF601 FOR FINISH SCHEDULES AND FINISH IDENTIFICATION SCHEDULES.

M PLUMBING FIXTURES SHOWN FOR REFERENCE ONLY. REFER TO PLUMBING SHEETS FOR MORE INFORMATION.

N SPECIALTY EQUIPMENT SHOWN FOR REFERENCE ONLY. REFER TO SHEET OQJ101B FOR EQUIPMENT PLAN AND OQJ201 FOR TYPICAL EQUIPMENT MOUNTING HEIGHTS AND ELEVATIONS.

O REFER TO SHEET OQJ201 FOR TYPICAL TOILET ROOM MOUNTING HEIGHTS AND ELEVATIONS.

KEY NOTES (00)

1 NITROGEN STORAGE TANK. REFER TO SHEETS OFX101 AND OFX501 FOR ADDITIONAL INFORMATION.

2 CONCRETE-FILLED STEEL BOLLARD, IMPACT-RATED. REFER TO DETAIL C4/OAE561.

3 REFER TO DETAIL A2/OAE101B FOR COVERED AREA FLOOR PLAN AT UPPER LOUVERED WALL.

4 REFER TO VOLUME 1, SHEET CG513 FOR DOWNSPOUT BOOT DETAILS.

5 REFER TO A2/OAE101A FOR PARTIAL FLOOR PLAN OF UPPER PORTION OF WALL.

6 FIRE EXTINGUISHER CABINET, SURFACE MOUNTED, ALL-WEATHER/OUTDOOR TYPE.

7 REFER TO A2/OAE101B FOR PARTIAL FLOOR PLAN OF UPPER PORTION OF COVERED AREA.

8 FIRE SPRINKLER RISERS. REFER TO SHEETS OFX101 AND OFX501 FOR ADDITIONAL INFORMATION.

9 NITROGEN GENERATOR. REFER TO SHEETS OFX101 AND OFX501 FOR ADDITIONAL INFORMATION.

MATERIAL NOTES

034500.A10	PRECAST CONCRETE INSULATED WALL PANEL
042000.D03	CMU 8"
076115.A01	STANDING-SEAM METAL ROOF PANEL
076115.U02	DOWNSPOUT
104400.A01	FIRE EXTINGUISHER
104400.A02	FIRE EXTINGUISHER MOUNTING BRACKET
104400.B01	FIRE EXTINGUISHER CABINET

PARTITION LEGEND

1 HOUR FIRE BARRIER

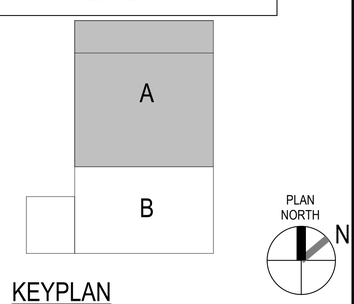

KEYPLAN

0 5' 10' 20' 30'

1/8" = 1'-0" GRAPHIC SCALE

NOTE:
IF THIS DRAWING IS LESS THAN 34" X 22"
IT IS A REDUCED SIZE DRAWING

SYM	DESCRIPTION	DATE	APPR
1	MOD P00005	05/2023	
2	MOD P00006 AND MOD P00007	10/2025	

NAVFAC

STATE OF FLORIDA
BILLY KEITH HOLLOWAY
AR93022
REGISTERED ARCHITECT
11.21.25
SEAL

BAMFORTH
ARCHITECTURE · ENGINEERING · CONSULTANTS

AE INFO

APPROVED

FOR COMMANDER NAVFAC 11/21/2025

ACTIVITY Approved by J. Scott Roberts, Asset Management Branch Head & Supervisory Facility Planner, PWD Beaufort, SC via email.

SATISFACTORY TO DATE 12/15/2022

DES	EAD	DRW KJF	CHK BKH
PMDM			KTB / RLH
BRANCH MANAGER			CGM
CHIEF ENG/ARCH			EJA
FP ENGINEER			DSN

DEPARTMENT OF THE NAVY
NAVAL FACILITIES ENGINEERING SYSTEMS COMMAND
DC CORE
NAVAL FACILITIES ENGINEERING SYSTEMS COMMAND - MID-ATLANTIC NORFOLK, VA
MCAS BEAUFORT
BEAUFORT, SC
P-475 AIRCRAFT MAINTENANCE HANGAR - VOLUME 3 (OSF OPTION)
OSF / SHOP ANNEX - FLOOR PLAN - GROUND FLOOR - SECTOR A

SCALE: As indicated
EPROJECT NO.: 1363603
CONSTR. CONTR. NO.
NAVFAC DRAWING NO. 12860135
SHEET 934 OF 1412

OAE101A

DRAWFORM REVISION: 28 AUGUST 2020

Autodesk Docs://20042 MIFAX 503 733 Maintenance Hangar/20042 F733 Maint Hangar_OSF Shop Annex.rvt
11/3/2025 9:08:48 PM

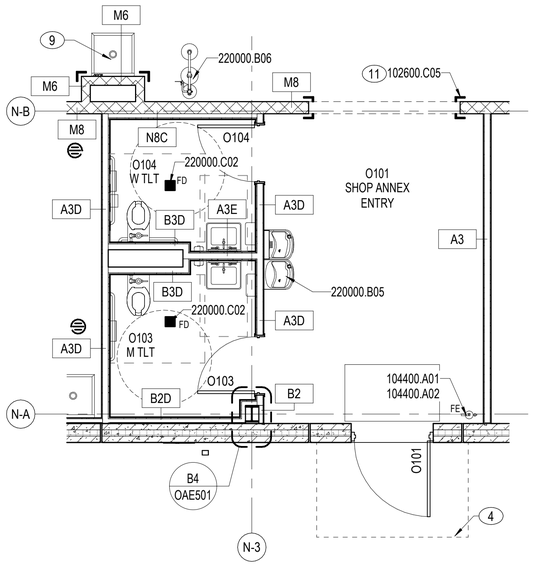

C1 ENLARGED PLAN - TOILETS

1/4" = 1'-0"

OAE101B

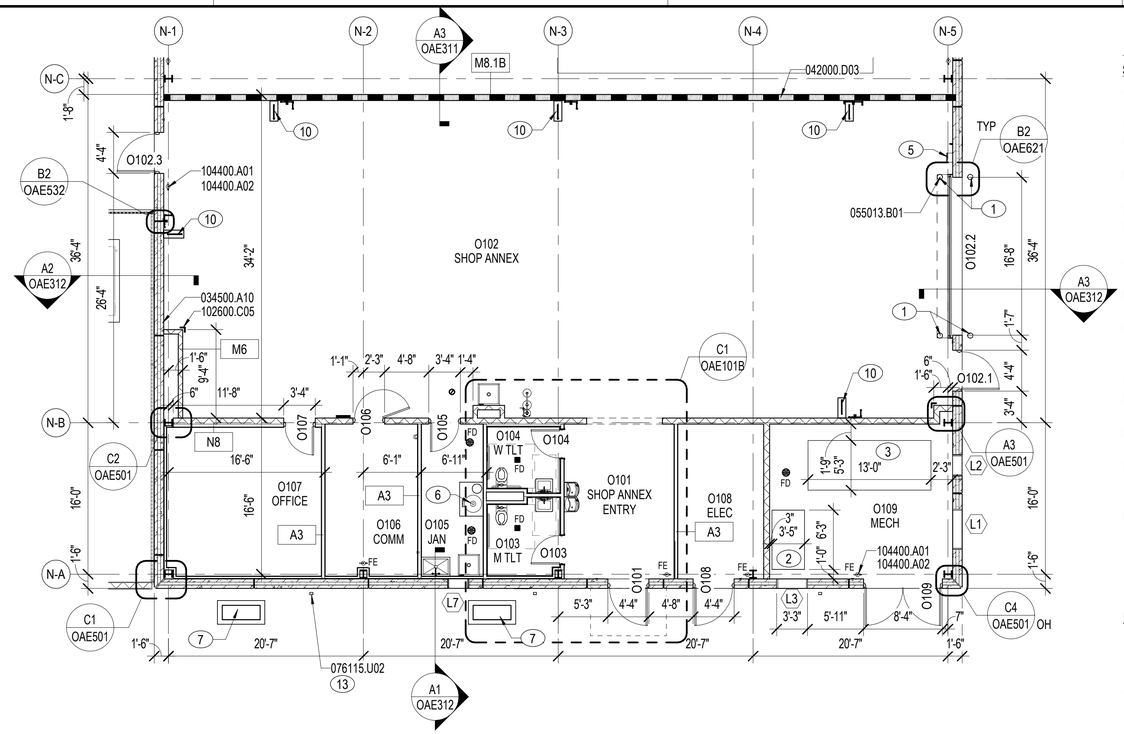

C2 FLOOR PLAN - GROUND FLOOR - SECTOR B

1/8" = 1'-0"

OAE101

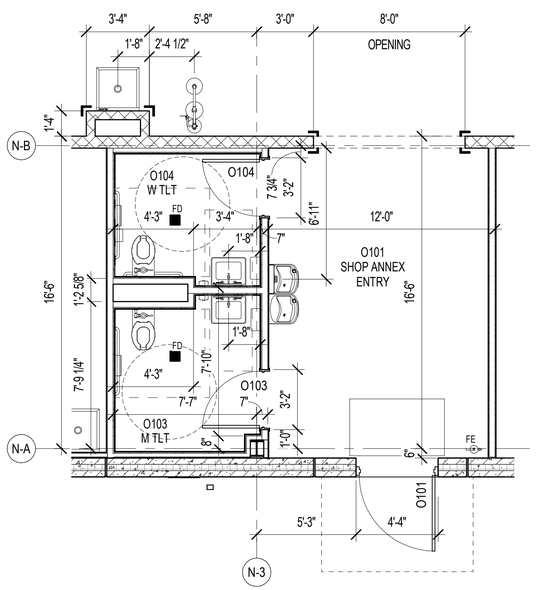

A1 ENLARGED DIMENSIONAL PLAN - TOILETS

1/4" = 1'-0"

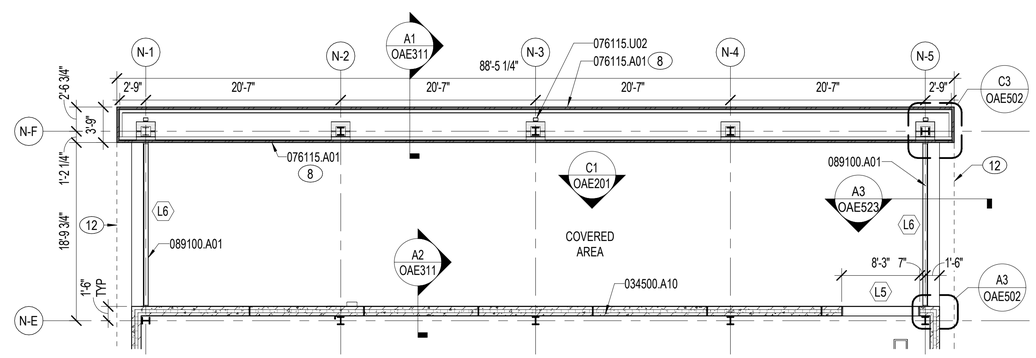

A2 FLOOR PLAN - COVERED AREA @ LOUVER

1/8" = 1'-0"

OAE101A

NOTES:

SHEET NOTES:

A REFER TO SHEET OAE001 FOR GENERAL ABBREVIATIONS AND ARCHITECTURAL SYMBOLS.

B DASHED LINES REPRESENT ITEMS ABOVE.

C ARCHITECTURAL EXTERIOR DIMENSIONS ARE TO EXTERIOR FACE OF INSULATED PRECAST PANEL AND FACE OF METAL STUD, UNO.

D ARCHITECTURAL DIMENSIONS ARE TO COLUMN GRID, FACE OF MASONRY / CONCRETE, FACE OF METAL STUD, UNO.

E REFER TO SHEET OGC001 FOR CODE SUMMARY AND OGC101 FOR LIFE SAFETY PLAN.

F REFER TO SHEET OAE101 FOR OVERALL ELEVATION AND BUILDING SECTION REFERENCES.

G REFER TO SHEET OAE601 FOR DOOR SCHEDULE, DOOR/FRAME ELEVATIONS, TRANSLUCENT PANEL ELEVATIONS, AND LOUVER ELEVATIONS.

H REFER TO SHEETS OAE621-OAE622 FOR DOOR DETAILS AND SHEET OAE631 FOR LOUVER AND TRANSLUCENT PANEL DETAILS.

I EXTERIOR WALL FURRING TO BE PARTITION TYPE B2, UNO. REFER TO SHEET OAE801 FOR PARTITION TYPES.

J PARTITIONS TO BE M8, UNO. REFER TO SHEET OAE801 FOR PARTITION TYPES.

K REFER TO SHEET OAE821 FOR THROUGH PENETRATION FIRESTOP SYSTEM SCHEDULE.

L REFER TO SHEET OAF601 FOR FINISH SCHEDULES AND FINISH IDENTIFICATION SCHEDULES.

M PLUMBING FIXTURES SHOWN FOR REFERENCE ONLY. REFER TO PLUMBING SHEETS FOR MORE INFORMATION.

N SPECIALTY EQUIPMENT SHOWN FOR REFERENCE ONLY. REFER TO SHEET OQJ101B FOR EQUIPMENT PLAN AND OQJ201 FOR TYPICAL EQUIPMENT MOUNTING HEIGHTS AND ELEVATIONS.

O REFER TO SHEET OQJ201 FOR TYPICAL TOILET ROOM MOUNTING HEIGHTS AND ELEVATIONS.

KEY NOTES (00)

1 CONCRETE-FILLED STEEL BOLLARD, IMPACT-RATED. REFER TO DETAIL C4/OAE561.

2 CONCRETE PAD FOR AIR COMPRESSOR. REFER TO SHEET OPP101B FOR ADDITIONAL INFORMATION.

3 CONCRETE PAD FOR AHU. REFER TO SHEET OMH401 FOR ADDITIONAL INFORMATION.

4 DASHED LINE REPRESENTS ALUMINUM CANOPY ABOVE. REFER TO SHEET A3/OAE561 FOR ENLARGED CANOPY PLAN.

5 OVERHEAD DOOR CONTROL PANEL.

6 WATER HEATER AND EXTENSION TANK. REFER TO SHEET OPP101B FOR ADDITIONAL INFORMATION. REFER TO SHEET OMH101B FOR WATER HEATER FLUE INFORMATION AND C3/OAE541 FOR ROOF PENETRATION DETAIL.

7 CONDENSING UNIT AND CONCRETE PAD. REFER TO SHEET OMP101B FOR ADDITIONAL INFORMATION.

8 STANDING SEAM METAL PANEL, VERTICAL INSTALLATION.

9 SERVICE SINK. REFER TO SHEET OPP101B FOR ADDITIONAL INFORMATION.

10 HOSE REEL, WALL-MOUNTED. REFER TO SHEETS OPP101B AND OPP502 FOR ADDITIONAL INFORMATION.

11 REFER TO SHEET OAF601 FOR ADDITIONAL INFORMATION.

12 DASHED LINE REPRESENTS SOFFIT ABOVE.

13 REFER TO VOLUME 1, SHEET CG513 FOR DOWNSPOUT BOOT DETAILS.

MATERIAL NOTES

034500.A10	PRECAST CONCRETE INSULATED WALL PANEL
042000.D03	CMU 8"
055013.B01	STEEL BOLLARD
076115.A01	STANDING-SEAM METAL ROOF PANEL
076115.U02	DOWNSPOUT
089100.A01	EXTRUDED ALUMINUM WALL LOUVER
102600.C05	STAINLESS STEEL CORNER GUARD
104400.A01	FIRE EXTINGUISHER
104400.A02	FIRE EXTINGUISHER MOUNTING BRACKET
220000.B05	ELECTRIC WATER COOLER
220000.B06	EMERGENCY SHOWER/ EYE WASH COMBINATION UNIT
220000.C02	FLOOR DRAIN

PARTITION LEGEND

1 HOUR FIRE BARRIER

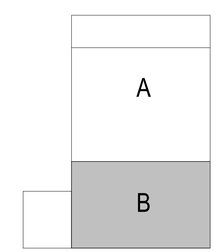

KEYPLAN

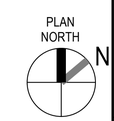

0 2' 4' 8' 12' 16'

1/4" = 1'-0" GRAPHIC SCALE

0 5' 10' 20' 30'

1/8" = 1'-0" GRAPHIC SCALE

NOTE:
IF THIS DRAWING IS LESS THAN 34" X 22"
IT IS A REDUCED SIZE DRAWING

SYM	DESCRIPTION	DATE	APPR
1	MOD P00005	05/2023	
2	MOD P00006 AND MOD P00007	10/2025	

NAVFAC

STATE OF FLORIDA
BILLY KEITH HOLLOWAY
AR93022
REGISTERED ARCHITECT
SEAL

BAMFORTH
ARCHITECTURE ENGINEERING

AE INFO

APPROVED

FOR COMMANDER NAVFAC 11/21/2025

ACTIVITY: Approved by J. Scott Roberts, Asset Management Branch Head & Supervisory Facility Planner, PWD Beaufort, SC via email.

SATISFACTORY TO DATE 12/15/2022

DES	EAD	DRW KJF	CHK BKH
PMDM	KTB / RLH		
BRANCH MANAGER	CGM		
CHIEF ENG/ARCH	EJA		
FP ENGINEER	DSN		

DEPARTMENT OF THE NAVY
NAVAL FACILITIES ENGINEERING SYSTEMS COMMAND
DC CORE
MCAS BEAUFORT

NAVAL FACILITIES ENGINEERING SYSTEMS COMMAND
NAVAL FACILITIES ENGINEERING SYSTEMS COMMAND - MID-ATLANTIC
NORFOLK, VA

BEAUFORT, SC
P-475 AIRCRAFT MAINTENANCE HANGAR - VOLUME 3 (OSF OPTION)

OSF / SHOP ANNEX - FLOOR PLAN - GROUND FLOOR - SECTOR B

SCALE: As indicated
EPROJECT NO.: 1363603
CONSTR. CONTR. NO.
NAVFAC DRAWING NO. 12860136
SHEET 935 OF 1412

OAE101B

DRAWFORM REVISION: 25 AUGUST 2003

Autodesk Docs://20042 MFA F 503 F35 Maintenance Hangar/20042 F 35 Maint Hangar_OSF Shop Annex.rvt
11/3/2025 9:08:50 PM

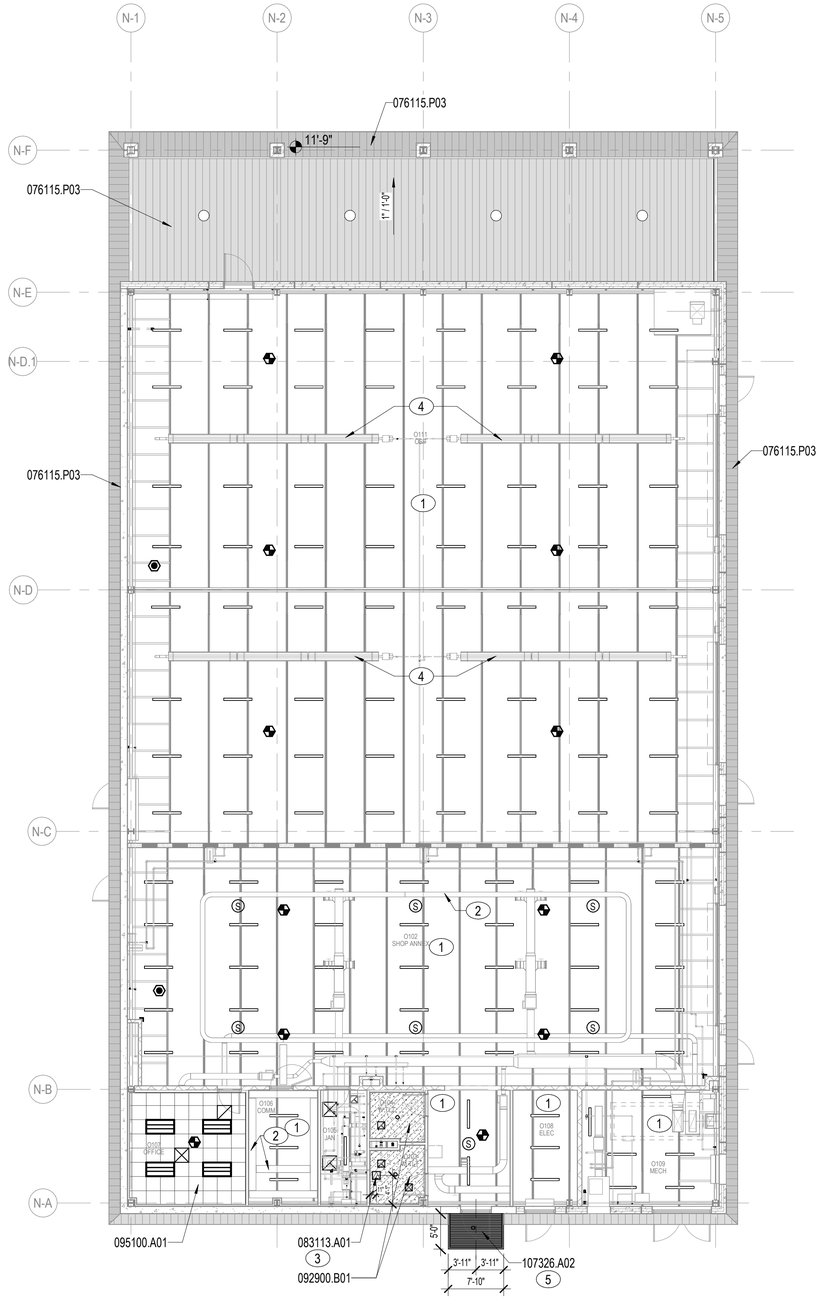

A2 GROUND FLOOR OVERALL REFLECTED CEILING PLAN

3/32" = 1'-0"

OAE301

CEILING LEGEND

CEILING TYPES

- INTERIOR: GYPSUM BOARD CEILING SYSTEM
  EXTERIOR: CEMENT PLASTER CEILING SYSTEM
- INTERIOR: GYPSUM BOARD CEILING SYSTEM - MOISTURE RESISTANT
- METAL SOFFIT PANEL
- ACOUSTICAL CEILING TILE 2'-0" X 2'-0"
- CEILING ACCESS PANEL.

ELECTRICAL SYMBOLS

- LIGHT FIXTURES
- EXIT LIGHTS
- OCCUPANCY SENSOR

COMMUNICATION SYMBOLS

- (S) SPEAKER

FIRE ALARM / SECURITY SYMBOLS

- FIRE ALARM SPEAKER/STROBE WALL MOUNTED
- FIRE ALARM SPEAKER WALL MOUNTED
- SMOKE DETECTOR
- HEAT DETECTOR
- SMOKE DETECTOR
- SPRINKLERS
- GAS DETECTOR

MECHANICAL SYMBOLS

- REMOTE ACTUATOR
- SUPPLY AIR DIFFUSER
- TRANSFER AIR REGISTER / GRILLE
- RETURN AIR REGISTER / GRILLE
- EXHAUST AIR REGISTER

NOTE:
NOT ALL ELEMENTS MAY BE USED.

NOTES:

SHEET NOTES:

A REFER TO SHEETS OAE001 FOR GENERAL ABBREVIATIONS AND ARCHITECTURAL SYMBOLS.
B REFER TO SHEET OGC001 FOR CODE SUMMARY AND OGC101 FOR LIFE SAFETY PLAN.
C ALL CEILING HEIGHTS ARE ABOVE FINISHED FLOOR.
D ALL CEILINGS ARE 9'-0" AFF UNO.
E ALL CEILING GRIDS TO BE CENTERED IN ROOMS UNO.
F PROVIDE GLASS MAT FACED GYPSUM BOARD (092900.B01) AT TOILET ROOM CEILINGS, TYPICAL.
G ACCESS PANELS TO BE PAINTED TO MATCH ADJACENT CEILING FINISH UNO.
H SINGLE LIGHT FIXTURES IN GYPSUM BOARD CEILINGS TO BE CENTERED IN BOTH DIRECTIONS UNO.
I REFER TO SHEET OAF601 FOR FINISH SCHEDULE AND FINISH IDENTIFICATION.
J REFER TO MECHANICAL DRAWINGS OMH101A-OMH101B AND OMP101A-OMP101B FOR COORDINATION OF ALL MECHANICAL ITEMS SHOWN IN CEILING PLAN.
K REFER TO ELECTRICAL DRAWINGS OFX101, OEL101A-OEL101B, AND OET101B FOR COORDINATION OF ALL ELECTRICAL ITEMS SHOWN IN CEILING PLAN.
L COMMUNICATION DEVICES AND CEILING MOUNTED EQUIPMENT TO BE CENTERED IN CEILING TILE UNO.
M IN CASE OF DISCREPANCIES IN LOCATION OF COMPONENTS WITH ELECTRICAL DRAWINGS, THE REFLECTED CEILING PLAN SHALL GOVERN.

KEY NOTES (00)

1 EXPOSED STRUCTURE ABOVE.
2 CABLE TRAY. REFER TO SHEETS OTT101 AND OTT101B FOR ADDITIONAL INFORMATION.
3 CEILING ACCESS DOOR, 12"x12". REFER TO DETAIL B2/OAE561.
4 RADIANT HEATER. REFER TO SHEETS OMH101A AND OMP101A FOR ADDITIONAL INFORMATION.
5 EXTRUDED ALUMINUM CANOPY SYSTEM, CENTER ON DOOR. REFER TO SHEET OAE561 FOR ADDITIONAL INFORMATION.

MATERIAL NOTES

076115.P03	METAL SOFFIT PANEL SYSTEM
083113.A01	ACCESS DOOR
092900.B01	GYPSUM BOARD, GLASS MAT FACED 5/8"
095100.A01	ACOUSTICAL CEILING UNITS
107326.A02	DOOR CANOPY SYSTEM

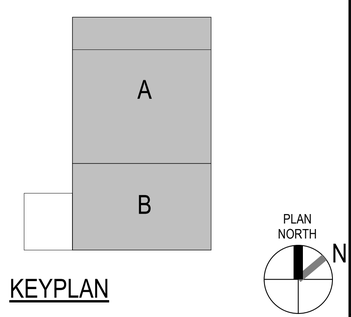

KEYPLAN

0 5' 10' 20' 30' 40'
3/32" = 1'-0" GRAPHIC SCALE

NOTE:
IF THIS DRAWING IS LESS THAN 34" X 22"
IT IS A REDUCED SIZE DRAWING

SYM	DESCRIPTION	DATE	APPR
1	MOD P00005	05/2023	
2	MOD P00006 AND MOD P00007	10/2025	

NAVFAC

STATE OF FLORIDA
BILLY KEITH HOLLOWAY
AR93022
REGISTERED ARCHITECT
SEAL

BAMFORTH
ENGINEERS + SURVEYORS
AE INFO

APPROVED
FOR COMMANDER NAVFAC 11/21/2025
ACTIVITY Approved by J. Scott Roberts, Asset Management Branch Head & Supervisory Facility Planner, PWD Beaufort, SC via email.

SATISFACTORY TO DATE			12/15/2022
DES EAD	DRW. KJF	CHK BKH	
PMDM			KTB / RLH
BRANCH MANAGER			CGM
CHIEF ENG/ARCH			EJA
FP ENGINEER			DSN

NAVAL FACILITIES ENGINEERING SYSTEMS COMMAND
DEPARTMENT OF THE NAVY
NAVAL FACILITIES ENGINEERING SYSTEMS COMMAND ~ MID-ATLANTIC
NORFOLK, VA
DC CODE
MCAS BEAUFORT
BEAUFORT, SC
P-475 AIRCRAFT MAINTENANCE HANGAR - VOLUME 3 (OSF OPTION)
OSF / SHOP ANNEX - REFLECTED CEILING PLAN - GROUND FLOOR - OVERALL

SCALE: As indicated
EPROJECT NO.: 1363603
CONSTR. CONTR. NO.
NAVFAC DRAWING NO. 12860137
SHEET 936 OF 1412

OAE111

DRAWFORM REVISION: 26 AUGUST 2020

Autodesk Docs://2042 NAFAC 502 F35 Maintenance Hangar/2042 F35 Maint Hangar_OSF Shop Annex.rvt
11/3/2025 9:06:55 PM

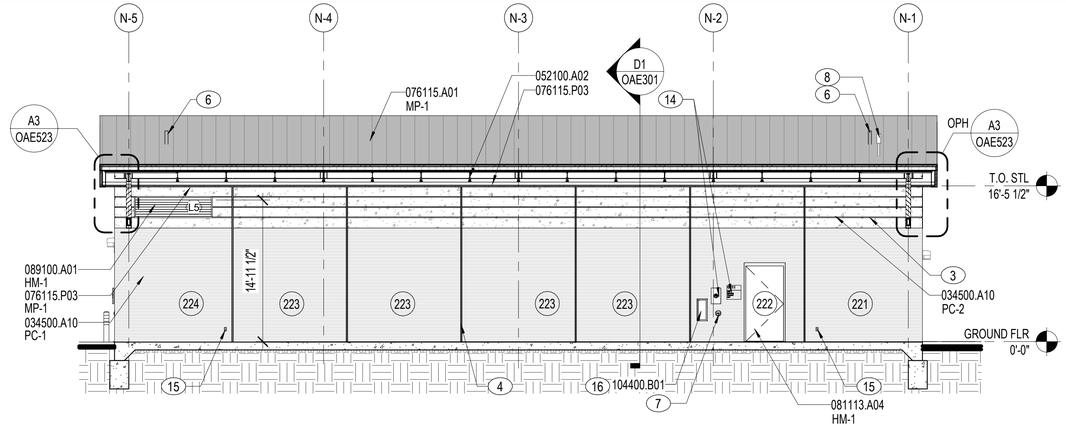

C1 NORTH ELEVATION - COVERED AREA

1/8" = 1'-0"

OAE101A, OAE101B

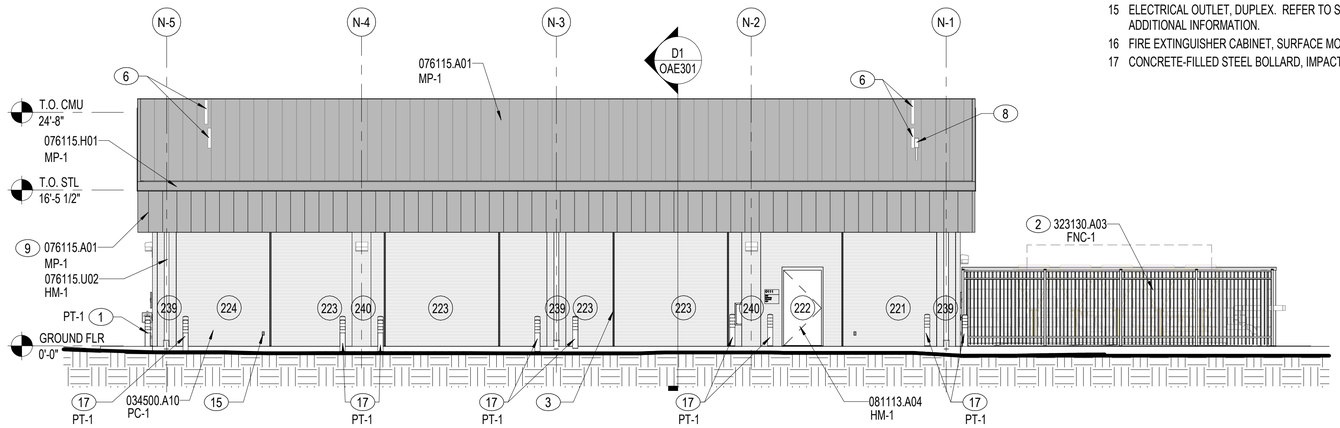

B1 NORTH ELEVATION

1/8" = 1'-0"

OAE101

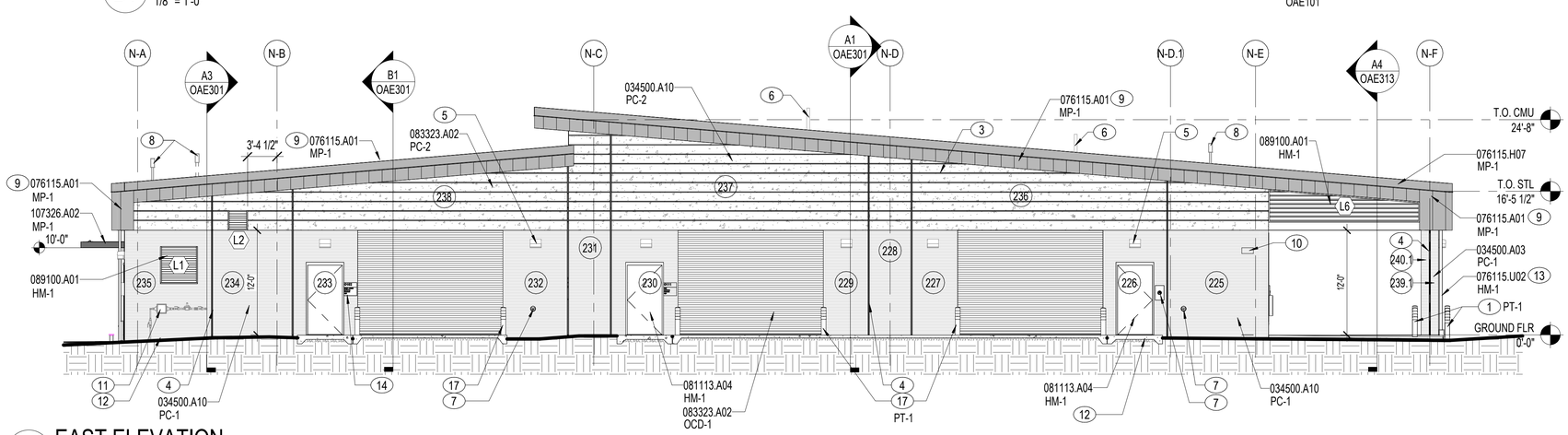

A1 EAST ELEVATION

1/8" = 1'-0"

OAE101

KEY NOTES (00)

1 CONCRETE-FILLED STEEL BOLLARD, IMPACT-RATED. REFER TO DETAIL C3/OAE561.
2 DECORATIVE METAL FENCE. REFER TO SHEET OAS401-OAS402 FOR ADDITIONAL INFORMATION.
3 PRECAST PANEL REVEAL, 3/4 INCH, TYPICAL. REFER TO SHEETS OAE531-OAE532 FOR TYPICAL PRECAST JOINT DETAILS.
4 PRECAST PANEL JOINT, 1 INCH, TYPICAL. REFER TO SHEETS OAE531-OAE532 FOR TYPICAL PRECAST JOINT DETAILS.
5 LIGHTING FIXTURE. REFER TO SHEETS OEL101A-OEL101B AND OEL501-OEL701 FOR ADDITIONAL INFORMATION.
6 RADIANT HEATER VENT. REFER TO SHEET OMH101A AND OMH502 FOR ADDITIONAL INFORMATION. REFER TO C3/OAE541 FOR ROOF PENETRATION DETAIL.
7 WALL HYDRANT, ROUND COVER BOX, ENCASED, NON-FREEZE. REFER TO SHEET OPP101A AND OPP502 FOR ADDITIONAL INFORMATION.
8 VTR. REFER TO SHEET OPP101A-OPP101B FOR ADDITIONAL INFORMATION. REFER TO C3/OAE541 FOR ROOF PENETRATION DETAIL.
9 STANDING SEAM METAL PANEL, VERTICAL INSTALLATION.
10 EXTERIOR BUILDING SIGN. REFER TO SHEETS OAG101A-OAG101B AND C4/OAG502 FOR ADDITIONAL INFORMATION.
11 GAS METER/REGULATOR. REFER TO OPP101B FOR ADDITIONAL INFORMATION.
12 TURNED DOWN EDGE CONCRETE SIDEWALK. REFER TO VOLUME 1, SHEET CS104 FOR ADDITIONAL INFORMATION.
13 REFER TO VOLUME 1, SHEET CG513 FOR DOWNSPOUT BOOT DETAILS.
14 ROOM SIGNAGE, EXTERIOR. REFER TO SHEETS OAG101A-OAG101B AND OAG502 FOR ADDITIONAL INFORMATION.
15 ELECTRICAL OUTLET, DUPLEX. REFER TO SHEETS OEP101A-OEP101B FOR ADDITIONAL INFORMATION.
16 FIRE EXTINGUISHER CABINET, SURFACE MOUNTED, ALL-WEATHER/OUTDOOR TYPE.
17 CONCRETE-FILLED STEEL BOLLARD, IMPACT-RATED. REFER TO DETAIL C4/OAE561.

NOTES:

SHEET NOTES:

A REFER TO SHEET OAE001 FOR GENERAL ABBREVIATIONS AND ARCHITECTURAL SYMBOLS.
B ARCHITECTURAL ELEVATION FOR GROUND FLOOR TOP OF SLAB IS DEFINED AS 0'-0". REFER TO CIVIL PLANS FOR SLAB ELEVATIONS RELATIVE TO NORTH AMERICAN VERTICAL DATUM (NAVD) SYSTEM.
C STANDING SEAM METAL ROOF TO BE 1" PER FOOT MINIMUM.
D (00) SYMBOL DENOTES PRECAST PANEL NUMBER. REFER TO SHEET OAE221 FOR PRECAST PANEL KEY PLAN AND SHEETS OAE222-OAE226 FOR PRECAST PANEL ELEVATIONS.
E WHERE COLOR IS SHOWN AS BEING SPECIFIC TO ONE MANUFACTURER, AN EQUIVALENT COLOR BY ANOTHER MANUFACTURER MAY BE SUBMITTED FOR APPROVAL. MANUFACTURERS AND MATERIALS SPECIFIED ARE NOT INTENDED TO LIMIT THE SELECTION OF EQUAL COLORS FROM OTHER MANUFACTURERS.
F REFER TO SHEET OAE601 FOR TRANSLUCENT PANEL ELEVATIONS AND LOUVER ELEVATIONS.
G COORDINATE ALL EXTERIOR EQUIPMENT WITH ENGINEERING DRAWINGS.

MATERIAL NOTES

034500.A03	PRECAST CONCRETE WALL PANEL
034500.A10	PRECAST CONCRETE INSULATED WALL PANEL
052100.A02	OPEN WEB STEEL JOIST
076115.A01	STANDING-SEAM METAL ROOF PANEL
076115.H01	METAL FLASHING
076115.H07	RAKE FLASHING
076115.P03	METAL SOFFIT PANEL SYSTEM
076115.U02	DOWNSPOUT
081113.A04	STEEL DOOR, INSULATED
083323.A02	INSULATED OVERHEAD COILING DOOR
089100.A01	EXTRUDED ALUMINUM WALL LOUVER
104400.B01	FIRE EXTINGUISHER CABINET
107326.A02	DOOR CANOPY SYSTEM
323130.A03	DECORATIVE METAL FENCE

EXTERIOR FINISH LEGEND

PC-1	ARCHITECTURAL PRECAST CONCRETE SANDBLAST LIGHT - PCI 110
PC-2	ARCHITECTURAL PRECAST CONCRETE SANDBLAST MEDIUM - PCI 110
MP-1	STANDING SEAM METAL PANEL KINGSPAN SLR DARK BRONZE
TP-1	TRANSLUCENT PANEL KINGSPAN ICE WHITE

ADDITIONAL FINISHES:

MP-1	SOFFIT PANEL / VERTICAL METAL PANEL / CANOPY KINGSPAN SLR DARK BRONZE
TPF-1	TRANSLUCENT PANEL FRAME KINGSPAN BONE WHITE
HM-1	HM DOOR / HM DOOR FRAME / DOWNSPOUTS / LOUVERS / LOUVER FRAME SW 6072 VERSATILE GRAY
OCD-1	OVERHEAD COILING DOOR RAL 7044
FNC-1	EXTERIOR METAL FENCE RAL 7044
PT-1	EXTERIOR BOLLARDS / EXTERIOR GAS METER SW 6072 VERSATILE GRAY
ST-1	STUCCO STUCCO TO MATCH SW 6072 VERSATILE GRAY

0 5' 10' 20' 30'
1/8" = 1'-0" GRAPHIC SCALE

NOTE:
IF THIS DRAWING IS LESS THAN 34" X 22"
IT IS A REDUCED SIZE DRAWING

SYM	DESCRIPTION	DATE	APPR
1	MOD P00005	05/2023	
2	MOD P00006 AND MOD P00007	10/2025	

NAVFAC

STATE OF FLORIDA
BILLY KEITH HOLLOWAY
AR93022
REGISTERED ARCHITECT
11.13.23
SEAL

BAMFORTH
ARCHITECTURE ENGINEERING

A/E INFO

APPROVED
FOR COMMANDER NAVFAC 11/21/2025

ACTIVITY Approved by J. Scott Roberts, Asset Management Branch Head & Supervisory Facility Planner, PWD Beaufort, SC via email.

SATISFACTORY TO DATE	12/15/2022
DES EAD DRW KJF CHK BKH	
PMDM	KTB / RLH
BRANCH MANAGER	CGM
CHIEF ENG/ARCH	EJA
FP ENGINEER	DSN

NAVAL FACILITIES ENGINEERING SYSTEMS COMMAND
NAVFAC LANT
NORFOLK, VA

DEPARTMENT OF THE NAVY
NAVAL FACILITIES ENGINEERING SYSTEMS COMMAND ~ MID-ATLANTIC
DC CODE
MCAS BEAUFORT
BEAUFORT, SC
P-475 AIRCRAFT MAINTENANCE HANGAR - VOLUME 3 (OSF OPTION)
OSF / SHOP ANNEX - BUILDING ELEVATIONS

SCALE:	1/8" = 1'-0"
EPROJECT NO.:	1363603
CONSTR. CONTR. NO.	
NAVFAC DRAWING NO.	12860138
SHEET 937 OF 1412	

OAE201

DRAWFORM REVISION: 25 AUGUST 2020

Autodesk Docs://2042 MFAT 502 F35 Maintenance Hangar/2042 F35 Maintenance Hangar_OSF Shop Annex.rvt
11/3/2025 9:05:05 PM

KEY NOTES (00)

1 CONCRETE-FILLED STEEL BOLLARD, IMPACT-RATED. REFER TO DETAIL C4/OAE561.
2 PRECAST PANEL JOINT, 1 INCH, TYPICAL. REFER TO SHEETS OAE531-OAE532 FOR TYPICAL PRECAST JOINT DETAILS.
3 STANDING SEAM METAL PANEL, VERTICAL INSTALLATION.
4 VTR. REFER TO SHEET OPP101A-OPP101B FOR ADDITIONAL INFORMATION. REFER TO C3/OAE541 FOR ROOF PENETRATION DETAIL.
5 EXTRUDED ALUMINUM CANOPY SYSTEM, CENTER ON DOOR. REFER TO SHEET OAE561 FOR ADDITIONAL INFORMATION.
6 EXTERIOR BUILDING SIGN. REFER TO SHEETS OAG101A-OAG101B AND C4/OAG502 FOR ADDITIONAL INFORMATION.
7 WALL HYDRANT, ROUND COVER BOX, ENCASED, NON-FREEZE. REFER TO SHEET OPP101A AND OPP502 FOR ADDITIONAL INFORMATION.
8 SQUADRON LOGO BUILDING SIGN. REFER TO SHEETS OAG101B AND A2/OAG502 FOR ADDITIONAL INFORMATION.
9 LIGHTING FIXTURE. REFER TO OEL101A FOR ADDITIONAL INFORMATION.
10 RADIANT HEATER VENT. REFER TO SHEET OMH101A AND OMH502 FOR ADDITIONAL INFORMATION. REFER TO C3/OAE541 FOR ROOF PENETRATION DETAIL.
11 CONCRETE PAVEMENT, 8" THICK, OVER 8" (MIN) AGGREGATE BASE COURSE. REFER TO VOLUME 1, SHEET CS104, FOR MORE INFORMATION.
12 ROOM SIGNAGE, EXTERIOR. REFER TO SHEETS OAG101A-OAG101B AND OAG502 FOR ADDITIONAL INFORMATION.
13 DISCONNECT SWITCH FOR CONDENSING UNIT. REFER TO SHEET OEP101B FOR ADDITIONAL INFORMATION.
14 WALL HYDRANT, ROUND COVER BOX, ENCASED, NON-FREEZE. REFER TO SHEET OPP101A AND OPP502 FOR ADDITIONAL INFORMATION.
15 CONCRETE RAMP WITH RAILINGS. REFER TO VOLUME 1, SHEET CS104 FOR ADDITIONAL INFORMATION.
16 TURNED DOWN EDGE CONCRETE SIDEWALK. REFER TO VOLUME 1, SHEET CS104 FOR ADDITIONAL INFORMATION.
17 CONCRETE PAVEMENT, 8" THICK, OVER 8" (MIN) AGGREGATE BASE COURSE. REFER TO VOLUME 1, SHEET CS501, FOR MORE INFORMATION.

NOTES:

SHEET NOTES:

A REFER TO SHEET OAE001 FOR GENERAL ABBREVIATIONS AND ARCHITECTURAL SYMBOLS.
B ARCHITECTURAL ELEVATION FOR GROUND FLOOR TOP OF SLAB IS DEFINED AS 0'-0". REFER TO CIVIL PLANS FOR SLAB ELEVATIONS RELATIVE TO NORTH AMERICAN VERTICAL DATUM (NAVD) SYSTEM.
C STANDING SEAM METAL ROOF TO BE 1" PER FOOT MINIMUM.
D (00) SYMBOL DENOTES PRECAST PANEL NUMBER. REFER TO SHEET OAE221 FOR PRECAST PANEL KEY PLAN AND SHEETS OAE222-OAE226 FOR PRECAST PANEL ELEVATIONS.
E WHERE COLOR IS SHOWN AS BEING SPECIFIC TO ONE MANUFACTURER, AN EQUIVALENT COLOR BY ANOTHER MANUFACTURER MAY BE SUBMITTED FOR APPROVAL. MANUFACTURERS AND MATERIALS SPECIFIED ARE NOT INTENDED TO LIMIT THE SELECTION OF EQUAL COLORS FROM OTHER MANUFACTURERS.
F REFER TO SHEET OAE601 FOR TRANSLUCENT PANEL ELEVATIONS AND LOUVER ELEVATIONS.
G COORDINATE ALL EXTERIOR EQUIPMENT WITH ENGINEERING DRAWINGS.

MATERIAL NOTES

034500.A03	PRECAST CONCRETE WALL PANEL
034500.A10	PRECAST CONCRETE INSULATED WALL PANEL
042000.C04	PRECAST CONCRETE COPING
042000.D03	CMU 8"
074213.A02	INSULATED METAL WALL PANEL SYSTEM
074213.P05	TRANSLUCENT PANEL SYSTEM
076115.A01	STANDING-SEAM METAL ROOF PANEL
076115.H07	RAKE FLASHING
076115.U02	DOWNSPOUT
081113.A04	STEEL DOOR, INSULATED
089100.A01	EXTRUDED ALUMINUM WALL LOUVER
107326.A02	DOOR CANOPY SYSTEM

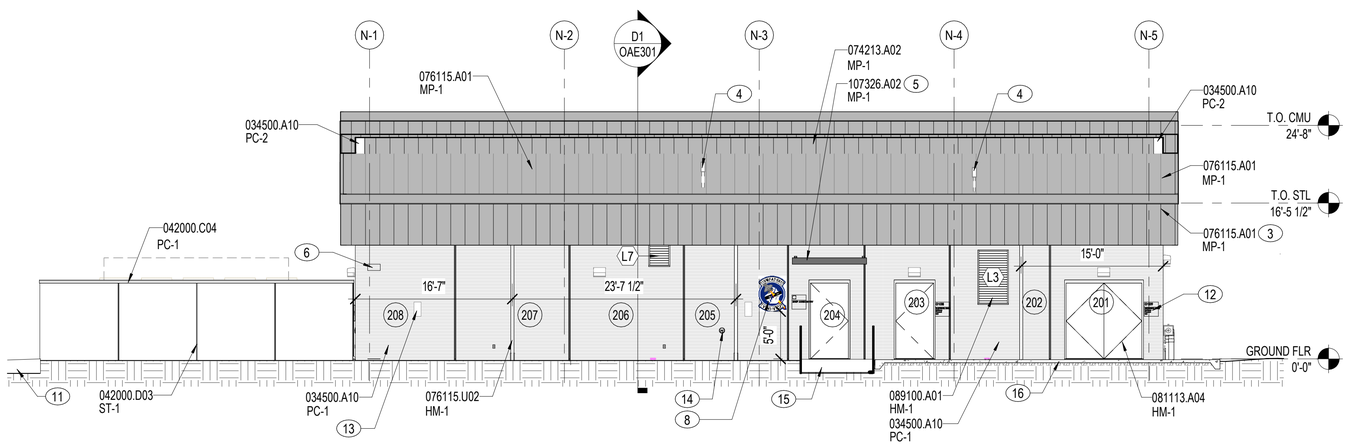

B1 SOUTH ELEVATION
1/8" = 1'-0"
OAE101

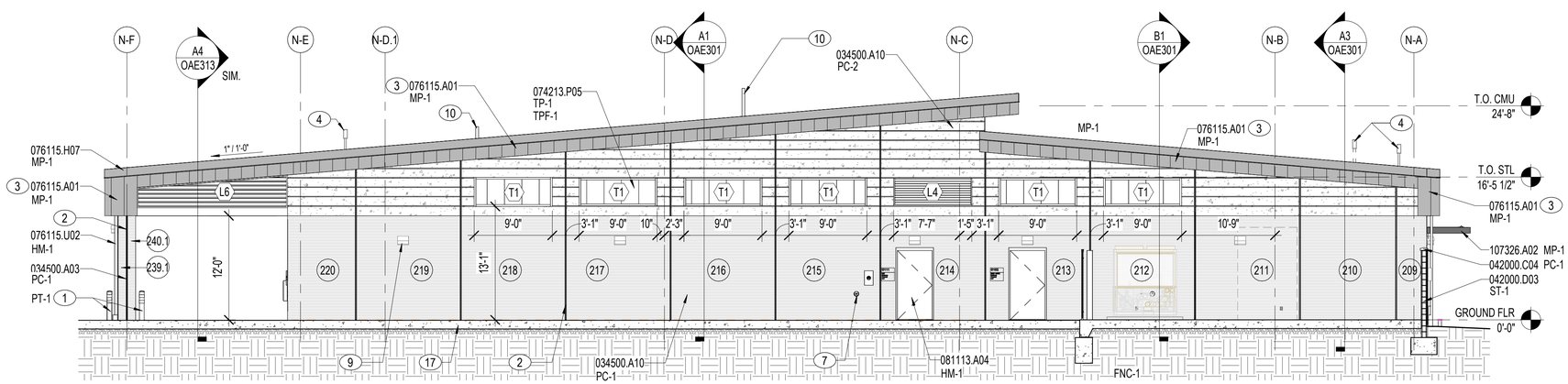

A1 WEST ELEVATION
1/8" = 1'-0"
OAE101

EXTERIOR FINISH LEGEND

PC-1	ARCHITECTURAL PRECAST CONCRETE SANDBLAST LIGHT - PCI 110
PC-2	ARCHITECTURAL PRECAST CONCRETE SANDBLAST MEDIUM - PCI 110
MP-1	STANDING SEAM METAL PANEL KINGSPAN SLR DARK BRONZE
TP-1	TRANSLUCENT PANEL KINGSPAN ICE WHITE

ADDITIONAL FINISHES:

MP-1	SOFFIT PANEL / VERTICAL METAL PANEL / CANOPY KINGSPAN SLR DARK BRONZE
TPF-1	TRANSLUCENT PANEL FRAME KINGSPAN BONE WHITE
HM-1	HM DOOR / HM DOOR FRAME / DOWNSPOUTS / LOUVERS / LOUVER FRAME SW 6072 VERSATILE GRAY
OCD-1	OVERHEAD COILING DOOR RAL 7044
FNC-1	EXTERIOR METAL FENCE RAL 7044
PT-1	EXTERIOR BOLLARDS / EXTERIOR GAS METER SW 6072 VERSATILE GRAY
ST-1	STUCCO STUCCO TO MATCH SW 6072 VERSATILE GRAY

0 5' 10' 20' 30'
1/8" = 1'-0" GRAPHIC SCALE

NOTE:
IF THIS DRAWING IS LESS THAN 34" X 22"
IT IS A REDUCED SIZE DRAWING

SYM	DESCRIPTION	DATE	APPR
1	MOD P00005	05/2023	
2	MOD P00006 AND MOD P00007	10/2025	

STATE OF FLORIDA
BILLY KEITH HOLLOWAY
AR93022
REGISTERED ARCHITECT
SEAL

BAMFORTH
AE INFO

APPROVED
FOR COMMANDER NAVFAC 11/21/2025
ACTIVITY
Approved by J. Scott Roberts, Asset Management Branch Head & Supervisory Facility Planner, PWD Beaufort, SC via email.
SATISFACTORY TO DATE 12/15/2022
DES EAD DRW KJF CHK BKH
PMDM KTB / RLH
BRANCH MANAGER CGM
CHIEF ENG/ARCH EJA
FP ENGINEER DSN

DEPARTMENT OF THE NAVY
NAVAL FACILITIES ENGINEERING SYSTEMS COMMAND ~ MID-ATLANTIC
NORFOLK, VA
DC CORE:
MCAS BEAUFORT
BEAUFORT, SC
P-475 AIRCRAFT MAINTENANCE HANGAR - VOLUME 3 (OSF OPTION)
OSF / SHOP ANNEX - BUILDING ELEVATIONS

SCALE: 1/8" = 1'-0"
EPROJECT NO.: 1363603
CONSTR. CONTR. NO.
NAVFAC DRAWING NO.: 12860139
SHEET 938 OF 1412
OAE202

DRAWFORM REVISION: 25 AUGUST 2020

Autodesk Docs://20043 MFA AT 102 F35 Maintenance Hangar/20043 F35 Maint Hangar_OSF Shop Annex.rvt
11/3/2025 5:05:14 PM

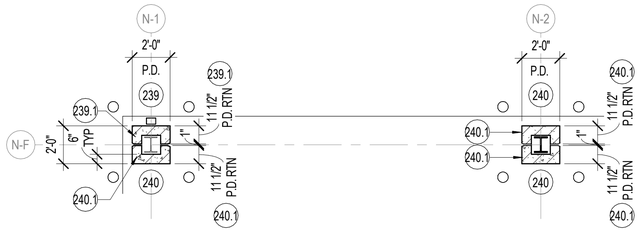

A1 ENLARGED PLAN
1/4" = 1'-0"
OAE221

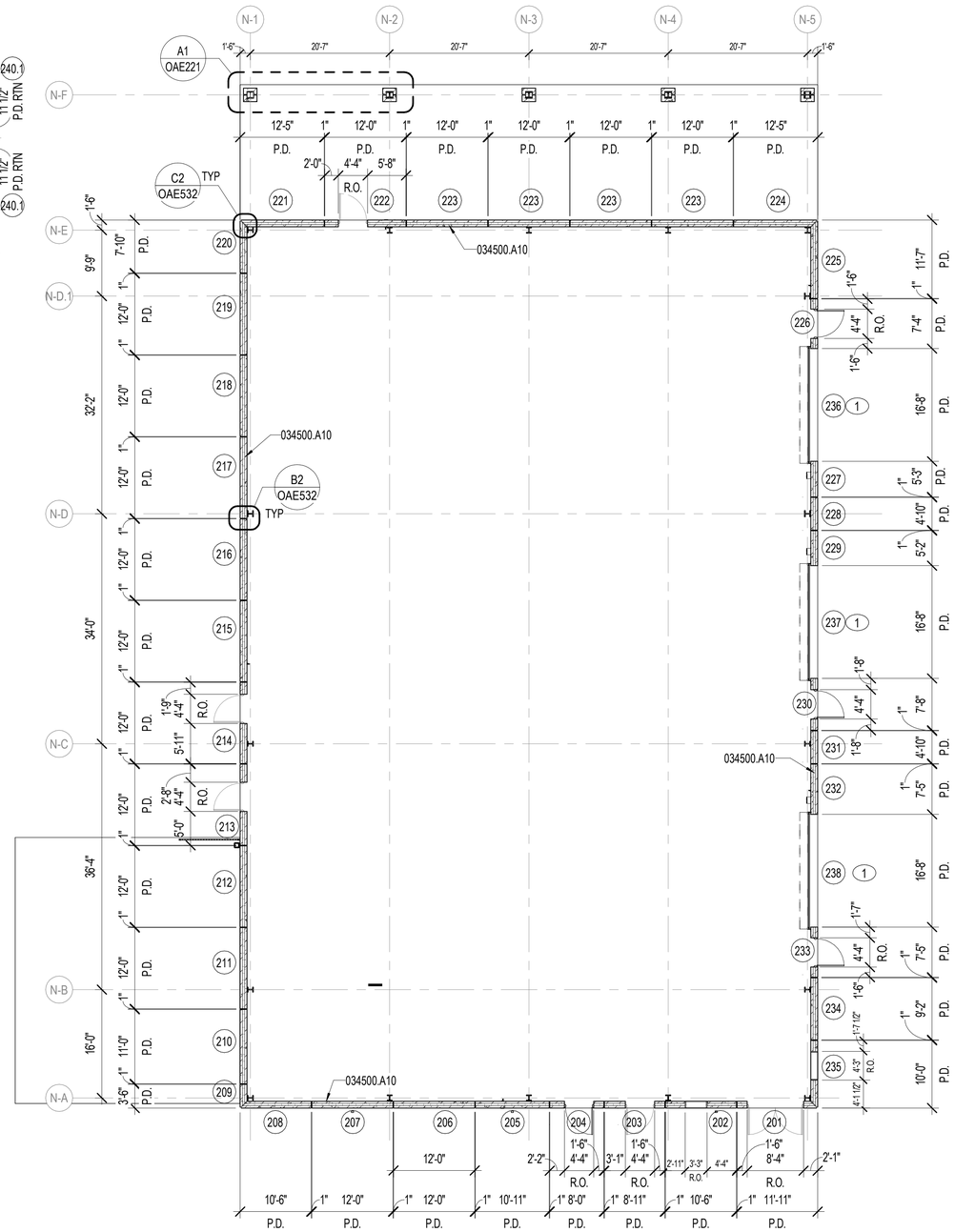

B2 PRECAST PANEL DIMENSIONAL PLAN - GROUND FLOOR
3/32" = 1'-0"
OAE201, OAE202

NOTES:

SHEET NOTES:

A REFER TO SHEET OAE001 FOR GENERAL ABBREVIATIONS AND ARCHITECTURAL SYMBOLS.

B (00) SYMBOL DENOTES PRECAST PANEL NUMBER. REFER TO SHEETS OAE222-OAE226 FOR PRECAST PANEL ELEVATIONS.

C PRECAST PANELS ARE BASED ON A 1" JOINT BETWEEN PANELS. PRECAST PANEL REVEALS ARE BASED ON A 3/4" REVEAL.

D REFER TO SHEETS OAE531-OAE532 FOR TYPICAL PRECAST JOINT SEALANT, REVEAL/JOINT DIMENSIONS, SEALANT WEEP DETAILS.

E COORDINATE DOOR, WINDOW AND OTHER OPENINGS WITH ARCHITECTURE AND ENGINEERING DRAWINGS.

F THE NUMBER OF PANEL TYPES CAN BE REDUCED PER CONCRETE PANEL MANUFACTURER RECOMMENDATIONS, WITH ARCHITECT'S APPROVAL.

G COORDINATE ALL DEVICES & OPENINGS ON PRECAST PANELS.

KEY NOTES (00)

1 PRECAST PANEL ABOVE.

MATERIAL NOTES

034500.A10 PRECAST CONCRETE INSULATED WALL PANEL

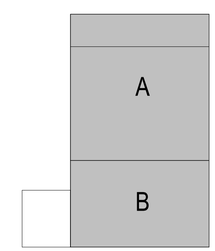

KEYPLAN

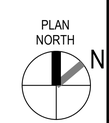

0 5' 10' 20' 30' 40'
3/32" = 1'-0" GRAPHIC SCALE

NOTE:
IF THIS DRAWING IS LESS THAN 34" X 22"
IT IS A REDUCED SIZE DRAWING

SYM	DESCRIPTION	DATE	APPR
1	MOD P00005	05/2023	
2	MOD P00006 AND MOD P00007	10/2025	

NAVFAC

STATE OF FLORIDA
BILLY KEITH HOLLOWAY
AR93022
REGISTERED ARCHITECT
SEAL

BAMFORTH
CONSULTING ENGINEERS

AE INFO

APPROVED
FOR COMMANDER NAVFAC 11/21/2025
ACTIVITY Approved by J. Scott Roberts, Asset Management Branch Head & Supervisory Facility Planner, PWD Beaufort, SC via email.
SATISFACTORY TO DATE 12/15/2022
DES EAD DRW KJF CHK BKH
PMDM KTB / RLH
BRANCH MANAGER CGM
CHIEF ENG/ARCH EJA
FP ENGINEER DSN

NAVAL FACILITIES ENGINEERING SYSTEMS COMMAND
NORFOLK, VA
DEPARTMENT OF THE NAVY
NAVAL FACILITIES ENGINEERING SYSTEMS COMMAND ~ MID-ATLANTIC
DC CODE
MCAS BEAUFORT
BEAUFORT, SC
P-475 AIRCRAFT MAINTENANCE HANGAR - VOLUME 3 (OSF OPTION)
OSF / SHOP ANNEX - PRECAST PANEL KEY PLAN

SCALE: As indicated
EPROJECT NO.: 1363603
CONSTR. CONTR. NO.
NAVFAC DRAWING NO.: 12860140
SHEET 939 OF 1412
OAE221

DRAWFORM REVISION: 25 AUGUST 2020

Autodesk Docs://20042 MFA/AT 102 F35 Maintenance Hangar/20042 F35 Maintenance Hangar_OSF Shop Annex.rvt
11/3/2025 9:09:15 PM

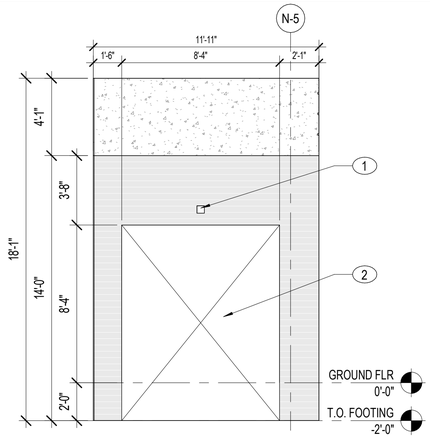

C1 201
1/4" = 1'-0"
OAE202, OAE221

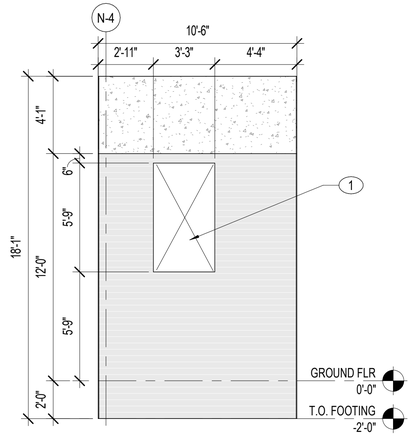

C2 202
1/4" = 1'-0"
OAE202, OAE221

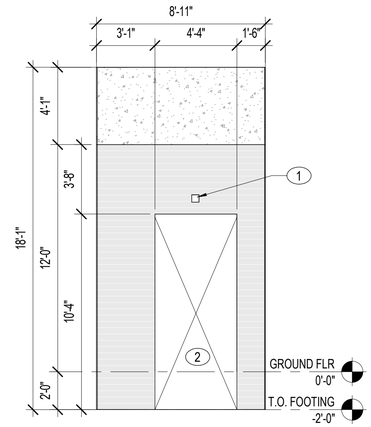

C3 203
1/4" = 1'-0"
OAE202, OAE221

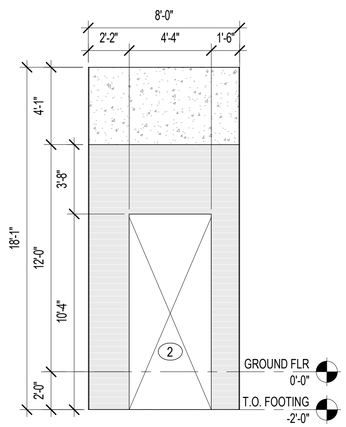

C4 204
1/4" = 1'-0"
OAE202, OAE221

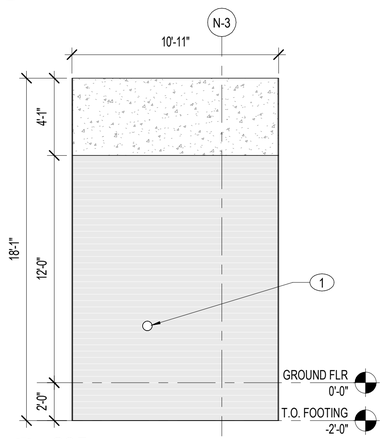

B1 205
1/4" = 1'-0"
OAE202, OAE221

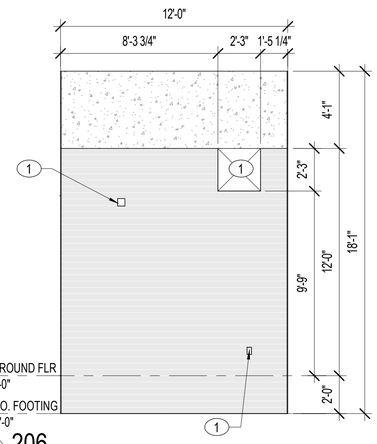

B2 206
1/4" = 1'-0"
OAE202, OAE221

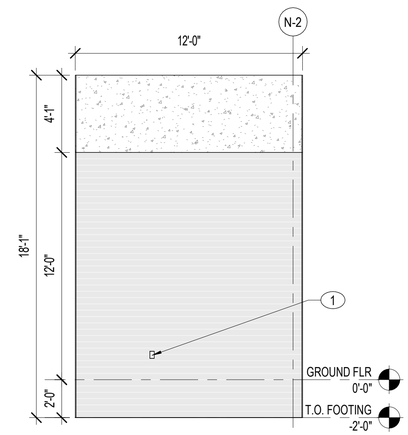

B3 207
1/4" = 1'-0"
OAE202, OAE221

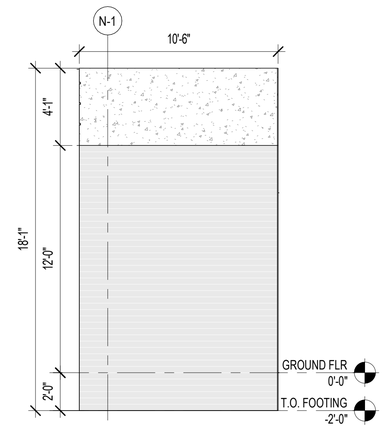

B4 208
1/4" = 1'-0"
OAE202, OAE221

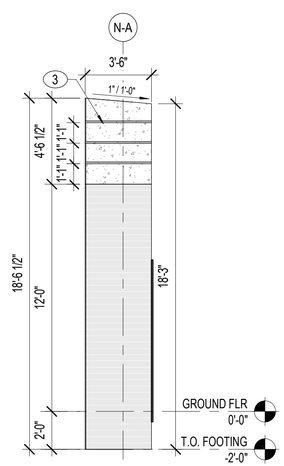

A1 209
1/4" = 1'-0"
OAE202, OAE221

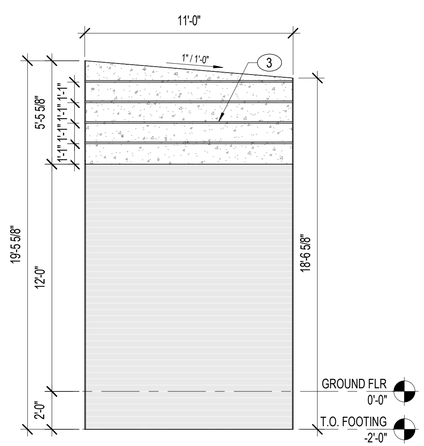

A2 210
1/4" = 1'-0"
OAE202, OAE221

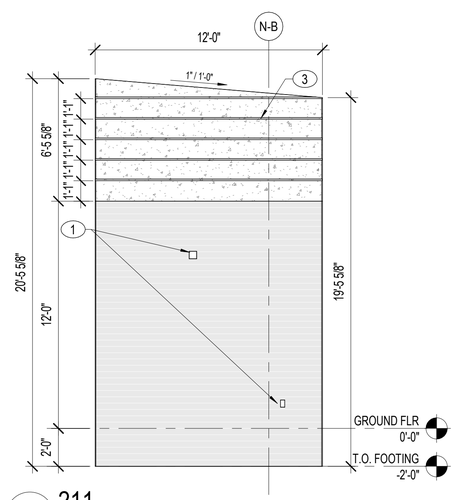

A3 211
1/4" = 1'-0"
OAE202, OAE221

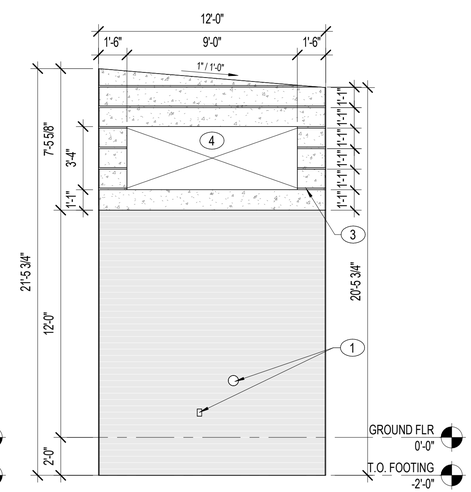

A4 212
1/4" = 1'-0"
OAE202, OAE221

NOTES:

SHEET NOTES:

A REFER TO SHEET OAE001 FOR GENERAL ABBREVIATIONS AND ARCHITECTURAL SYMBOLS.

B REFER TO SHEET OAE221 FOR PRECAST PANEL KEY PLAN.

C PANEL ELEVATIONS ARE MEANT TO BE A DESIGN GUIDE. PRECAST MANUFACTURER TO VERIFY FINAL DIMENSIONS AND PRECAST PENETRATIONS PRIOR TO FABRICATION.

D PRECAST PANELS ARE BASED ON A 1" JOINT BETWEEN PANELS. PRECAST PANEL REVEALS ARE BASED ON A 3/4" REVEAL.

E REFER TO SHEETS OAE531-OAE532 FOR TYPICAL PRECAST JOINT SEALANT, REVEAL/JOINT DIMENSIONS, SEALANT WEEP DETAILS.

F COORDINATE DOOR, WINDOW AND OTHER OPENINGS WITH ARCHITECTURE AND ENGINEERING DRAWINGS.

G COORDINATE BOTTOM OF PANEL WITH STRUCTURAL GRADE BEAM LOCATIONS.

H THE NUMBER OF PANEL TYPES CAN BE REDUCED PER CONCRETE PANEL MANUFACTURER RECOMMENDATIONS, WITH ARCHITECT'S APPROVAL.

I COORDINATE ALL DEVICES & OPENINGS ON PRECAST PANELS.

KEY NOTES (00)

1 COORDINATE UTILITY OPENING AND PENETRATIONS IN PRECAST, TYPICAL. REFER TO ELECTRICAL, MECHANICAL, AND PLUMBING DRAWINGS FOR MORE INFORMATION

2 ROUGH OPENING FOR DOOR.

3 PRECAST PANEL JOINT, 1 INCH, TYPICAL. REFER TO SHEETS OAE531-OAE532 FOR TYPICAL PRECAST JOINT DETAILS.

4 ROUGH OPENING FOR TRANSLUCENT PANEL.

EXTERIOR FINISH LEGEND

PC-1	ARCHITECTURAL PRECAST CONCRETE SANDBLAST LIGHT - PCI 110	
PC-2	ARCHITECTURAL PRECAST CONCRETE SANDBLAST MEDIUM - PCI 110	

0 1' 5' 10' 15'
1/4" = 1'-0" GRAPHIC SCALE

NOTE:
IF THIS DRAWING IS LESS THAN 34" X 22"
IT IS A REDUCED SIZE DRAWING

SYM	DESCRIPTION	DATE	APPR
1	MOD P00005	05/2023	
2	MOD P00006 AND MOD P00007	10/2025	

NAVFAC

STATE OF FLORIDA
BILLY KEITH HOLLOWAY
AR93022
REGISTERED ARCHITECT
SEAL

BAMFORTH
ARCHITECTURE & ENGINEERING

AE INFO

APPROVED
FOR COMMANDER NAVFAC 11/21/2025
ACTIVITY
Approved by J. Scott Roberts,
Asset Management Branch Head &
Supervisory Facility Planner, PWD
Beaufort, SC via email.
SATISFACTORY TO DATE 12/15/2022

DES	EAD	DRW KJF	CHK BKH
PMDM			KTB / RLH
BRANCH MANAGER			CGM
CHIEF ENG/ARCH			EJA
FP ENGINEER			DSN

DEPARTMENT OF THE NAVY
NAVAL FACILITIES ENGINEERING SYSTEMS COMMAND
DC CODE:
NAVAL FACILITIES ENGINEERING SYSTEMS COMMAND – MID-ATLANTIC
NORFOLK, VA
MCAS BEAUFORT
BEAUFORT, SC
P-475 AIRCRAFT MAINTENANCE HANGAR - VOLUME 3 (OSF OPTION)
OSF / SHOP ANNEX - PRECAST PANEL ELEVATIONS

SCALE: As indicated
EPROJECT NO.: 1363603
CONSTR. CONTR. NO.
NAVFAC DRAWING NO. 12860141
SHEET 940 OF 1412

OAE222

DRAWFORM REVISION: 25 AUGUST 2020

Autodesk Docs://20043 MIFA F 502 F50 Maintenance Hangar/20043 F 50 Maint Hangar_OSF Shop Annex.rvt
11/3/2025 9:09:15 PM

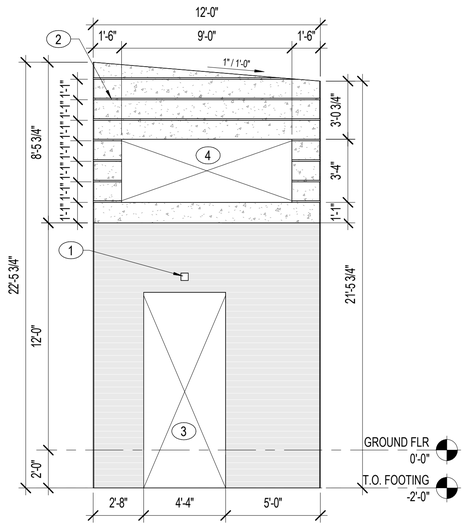

C1 213
1/4" = 1'-0"
OAE202, OAE221

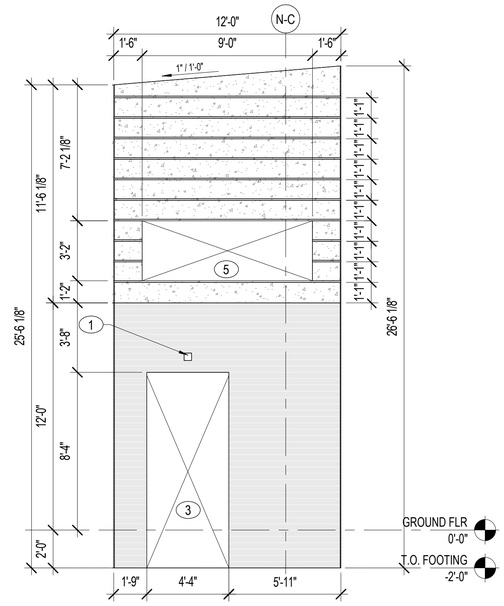

C2 214
1/4" = 1'-0"
OAE202, OAE221

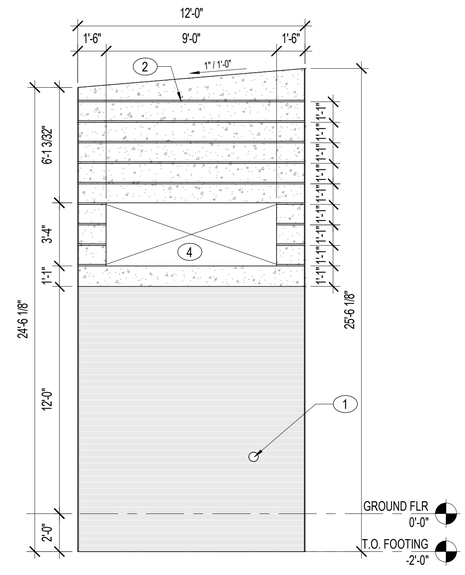

C4 215
1/4" = 1'-0"
OAE202, OAE221

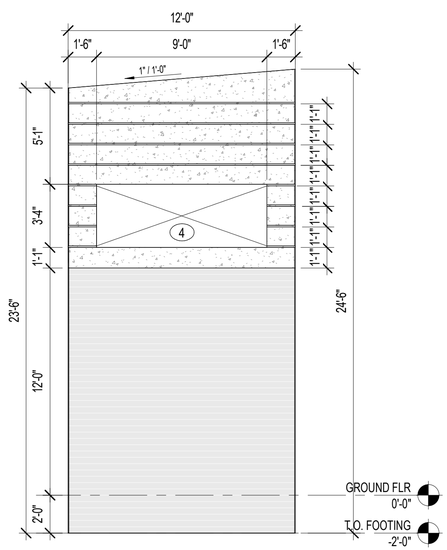

A1 216
1/4" = 1'-0"
OAE202, OAE221

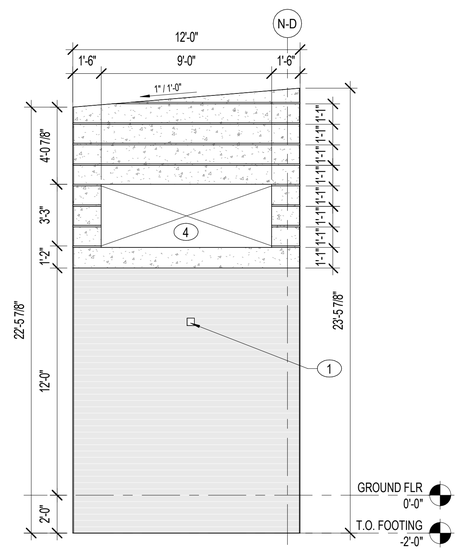

A2 217
1/4" = 1'-0"
OAE202, OAE221

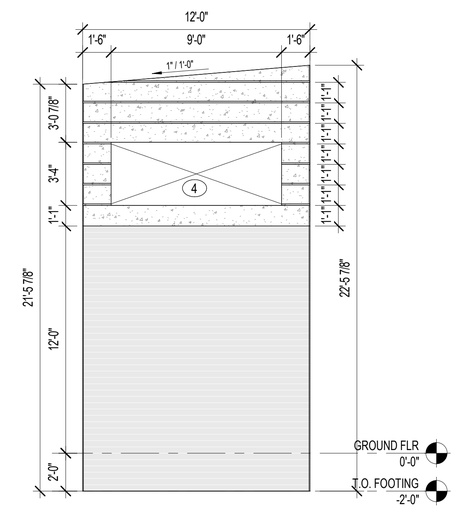

A4 218
1/4" = 1'-0"
OAE202, OAE221

NOTES:

SHEET NOTES:

A REFER TO SHEET OAE001 FOR GENERAL ABBREVIATIONS AND ARCHITECTURAL SYMBOLS.

B REFER TO SHEET OAE221 FOR PRECAST PANEL KEY PLAN.

C PANEL ELEVATIONS ARE MEANT TO BE A DESIGN GUIDE. PRECAST MANUFACTURER TO VERIFY FINAL DIMENSIONS AND PRECAST PENETRATIONS PRIOR TO FABRICATION.

D PRECAST PANELS ARE BASED ON A 1" JOINT BETWEEN PANELS. PRECAST PANEL REVEALS ARE BASED ON A 3/4" REVEAL.

E REFER TO SHEETS OAE531-OAE532 FOR TYPICAL PRECAST JOINT SEALANT, REVEAL/JOINT DIMENSIONS, SEALANT WEEP DETAILS.

F COORDINATE DOOR, WINDOW AND OTHER OPENINGS WITH ARCHITECTURE AND ENGINEERING DRAWINGS.

G COORDINATE BOTTOM OF PANEL WITH STRUCTURAL GRADE BEAM LOCATIONS.

H THE NUMBER OF PANEL TYPES CAN BE REDUCED PER CONCRETE PANEL MANUFACTURER RECOMMENDATIONS, WITH ARCHITECT'S APPROVAL.

I COORDINATE ALL DEVICES & OPENINGS ON PRECAST PANELS.

KEY NOTES (00)

1 COORDINATE UTILITY OPENING AND PENETRATIONS IN PRECAST, TYPICAL. REFER TO ELECTRICAL, MECHANICAL, AND PLUMBING DRAWINGS FOR MORE INFORMATION

2 PRECAST PANEL JOINT, 1 INCH, TYPICAL. REFER TO SHEETS OAE531-OAE532 FOR TYPICAL PRECAST JOINT DETAILS.

3 ROUGH OPENING FOR DOOR.

4 ROUGH OPENING FOR TRANSLUCENT PANEL.

5 ROUGH OPENING FOR LOUVER.

EXTERIOR FINISH LEGEND

PC-1	ARCHITECTURAL PRECAST CONCRETE SANDBLAST LIGHT - PCI 110
PC-2	ARCHITECTURAL PRECAST CONCRETE SANDBLAST MEDIUM - PCI 110

0 1' 5' 10' 15'
1/4" = 1'-0" GRAPHIC SCALE

NOTE:
IF THIS DRAWING IS LESS THAN 34" X 22"
IT IS A REDUCED SIZE DRAWING

SYM	DESCRIPTION	DATE	APPR
1	MOD P00005	05/2023	
2	MOD P00006 AND MOD P00007	10/2025	

NAVFAC

STATE OF FLORIDA
BILLY KEITH HOLLOWAY
AR93022
REGISTERED ARCHITECT
11.13.23
SEAL

BAMFORTH
ARCHITECTURE & DESIGN

AE INFO

APPROVED
FOR COMMANDER NAVFAC 11/21/2025

ACTIVITY: Approved by J. Scott Roberts, Asset Management Branch Head & Supervisory Facility Planner, PWD Beaufort, SC via email.

SATISFACTORY TO DATE 12/15/2022

DES	EAD	DRW KJF	CHK BKH
PMDM	KTB / RLH		
BRANCH MANAGER	CGM		
CHIEF ENG/ARCH	EJA		
FP ENGINEER	DSN		

DEPARTMENT OF THE NAVY
NAVAL FACILITIES ENGINEERING SYSTEMS COMMAND
DC: CORE
NAVAL FACILITIES ENGINEERING SYSTEMS COMMAND - MID-ATLANTIC NORFOLK, VA
MCAS BEAUFORT BEAUFORT, SC
P-475 AIRCRAFT MAINTENANCE HANGAR - VOLUME 3 (OSF OPTION)
OSF / SHOP ANNEX - PRECAST PANEL ELEVATIONS

SCALE: As indicated
EPROJECT NO.: 1363603
CONSTR. CONTR. NO.
NAVFAC DRAWING NO. 12860142
SHEET 941 OF 1412

OAE223

DRAWFORM REVISION 25 AUGUST 2020

Autodesk Docs://20042 MIFA F 503 F33 Maintenance Hangar/20042 F33 Maintenance Hangar_OSF Shop Annex.rvt
11/3/2025 9:09:16 PM

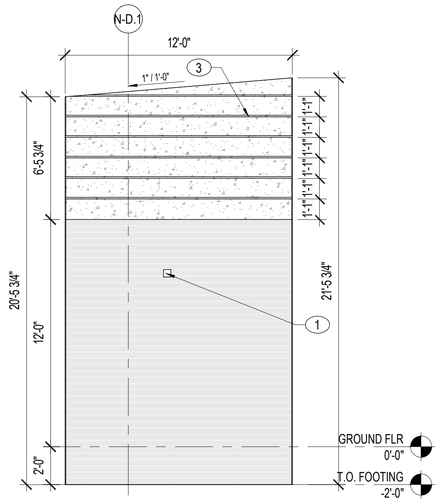

C1 219
1/4" = 1'-0"
OAE202, OAE221

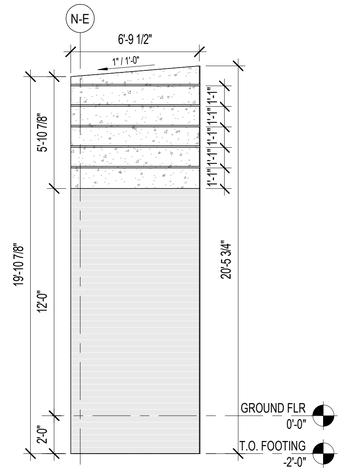

C2 220
1/4" = 1'-0"
OAE202, OAE221

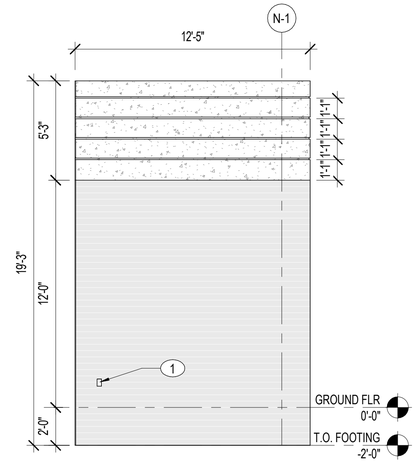

C3 221
1/4" = 1'-0"
OAE201, OAE221

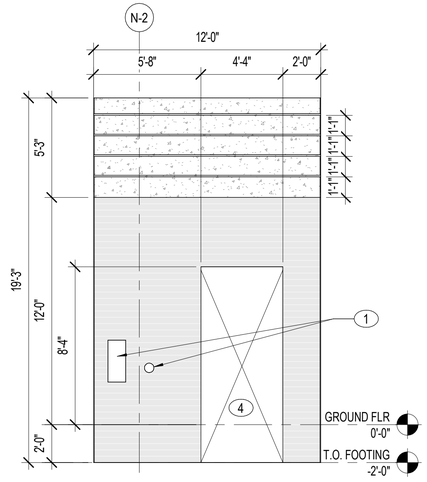

C4 222
1/4" = 1'-0"
0AE201, OAE221

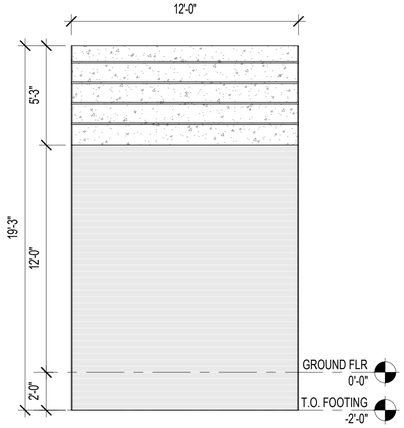

B1 223
1/4" = 1'-0"
OAE201, OAE221

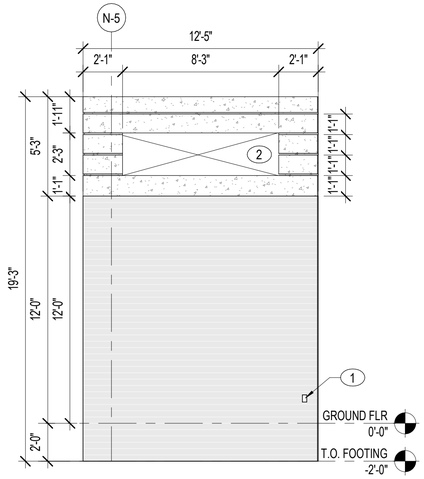

B2 224
1/4" = 1'-0"
OAE201, OAE221

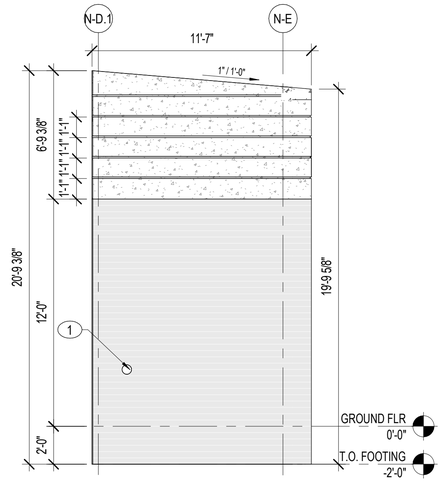

B3 225
1/4" = 1'-0"
OAE201, OAE221

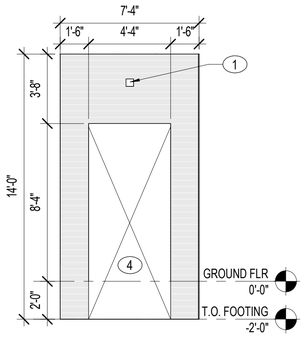

B4 226
1/4" = 1'-0"
OAE201, OAE221

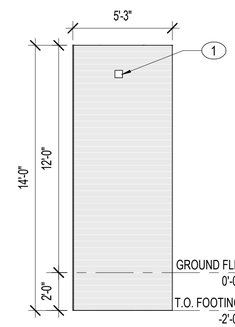

A4 227
1/4" = 1'-0"
OAE201, OAE221

NOTES:

SHEET NOTES:

A REFER TO SHEET OAE001 FOR GENERAL ABBREVIATIONS AND ARCHITECTURAL SYMBOLS.

B REFER TO SHEET OAE221 FOR PRECAST PANEL KEY PLAN.

C PANEL ELEVATIONS ARE MEANT TO BE A DESIGN GUIDE. PRECAST MANUFACTURER TO VERIFY FINAL DIMENSIONS AND PRECAST PENETRATIONS PRIOR TO FABRICATION.

D PRECAST PANELS ARE BASED ON A 1" JOINT BETWEEN PANELS. PRECAST PANEL REVEALS ARE BASED ON A 3/4" REVEAL.

E REFER TO SHEETS OAE531-OAE532 FOR TYPICAL PRECAST JOINT SEALANT, REVEAL/JOINT DIMENSIONS, SEALANT WEEP DETAILS.

F COORDINATE DOOR, WINDOW AND OTHER OPENINGS WITH ARCHITECTURE AND ENGINEERING DRAWINGS.

G COORDINATE BOTTOM OF PANEL WITH STRUCTURAL GRADE BEAM LOCATIONS.

H THE NUMBER OF PANEL TYPES CAN BE REDUCED PER CONCRETE PANEL MANUFACTURER RECOMMENDATIONS, WITH ARCHITECT'S APPROVAL.

I COORDINATE ALL DEVICES & OPENINGS ON PRECAST PANELS.

KEY NOTES (00)

1 COORDINATE UTILITY OPENING AND PENETRATIONS IN PRECAST, TYPICAL. REFER TO ELECTRICAL, MECHANICAL, AND PLUMBING DRAWINGS FOR MORE INFORMATION

2 ROUGH OPENING FOR LOUVER.

3 PRECAST PANEL JOINT, 1 INCH, TYPICAL. REFER TO SHEETS OAE531-OAE532 FOR TYPICAL PRECAST JOINT DETAILS.

4 ROUGH OPENING FOR DOOR.

EXTERIOR FINISH LEGEND

PC-1	ARCHITECTURAL PRECAST CONCRETE SANDBLAST LIGHT - PCI 110
PC-2	ARCHITECTURAL PRECAST CONCRETE SANDBLAST MEDIUM - PCI 110

0 1' 5' 10' 15'
1/4" = 1'-0" GRAPHIC SCALE

NOTE:
IF THIS DRAWING IS LESS THAN 34" X 22"
IT IS A REDUCED SIZE DRAWING

SYM	DESCRIPTION	DATE	APPR
1	MOD P00005	05/2023	
2	MOD P00006 AND MOD P00007	10/2025	

NAVFAC

STATE OF FLORIDA
BILLY KEITH HOLLOWAY
AR93022
REGISTERED ARCHITECT
11.13.23
SEAL

BAMFORTH
ARCHITECTURE & ENGINEERING

A/E INFO

APPROVED
FOR COMMANDER NAVFAC 11/21/2025
ACTIVITY Approved by J. Scott Roberts, Asset Management Branch Head & Supervisory Facility Planner, PWD Beaufort, SC via email.
SATISFACTORY TO DATE 12/15/2022

DES	EAD	DRW KJF	CHK BKH
PM/DM	KTB / RLH		
BRANCH MANAGER	CGM		
CHIEF ENG/ARCH	EJA		
FP ENGINEER	DSN		

DEPARTMENT OF THE NAVY
NAVAL FACILITIES ENGINEERING SYSTEMS COMMAND
DC CODE
NAVAL FACILITIES ENGINEERING SYSTEMS COMMAND - MID-ATLANTIC NORFOLK, VA
MCAS BEAUFORT
BEAUFORT, SC
P-475 AIRCRAFT MAINTENANCE HANGAR - VOLUME 3 (OSF OPTION)
OSF / SHOP ANNEX - PRECAST PANEL ELEVATIONS

SCALE: As indicated
EPROJECT NO.: 1363603
CONSTR. CONTR. NO.
NAVFAC DRAWING NO.: 12860143
SHEET 942 OF 1412

OAE224

DRAWFORM REVISION: 28 AUGUST 2020

Autodesk Docs://20043 MRAX 502 P3 Maintenance Hangar/20043 F3 B1 Maint Hangar_OSF Shop Annex.rvt
11/3/2025 9:05:20 PM

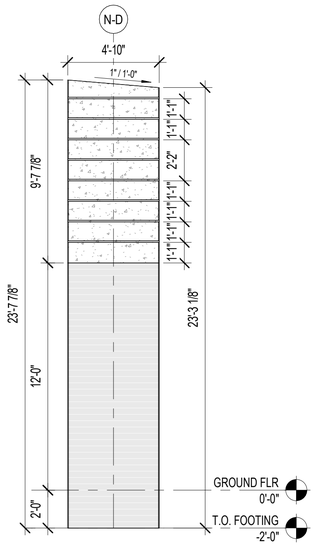

C1 228
1/4" = 1'-0"
OAE201, OAE221

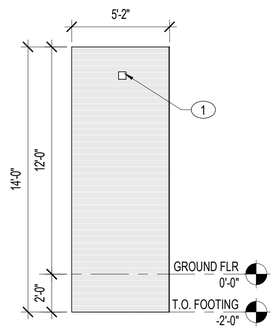

C2 229
1/4" = 1'-0"
OAE201, OAE221

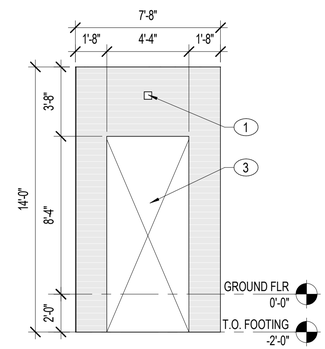

C3 230
1/4" = 1'-0"
OAE201, OAE221

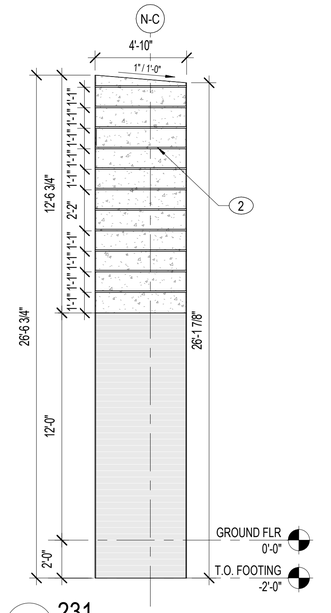

C4 231
1/4" = 1'-0"
OAE201, OAE221

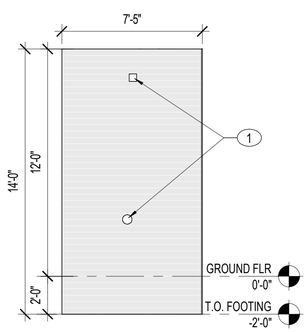

A1 232
1/4" = 1'-0"
OAE201, OAE221

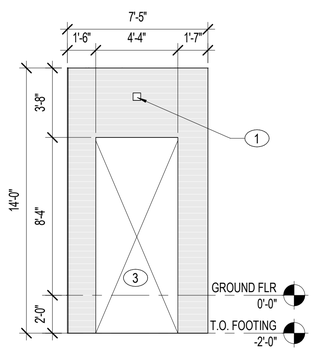

A2 233
1/4" = 1'-0"
OAE201, OAE221

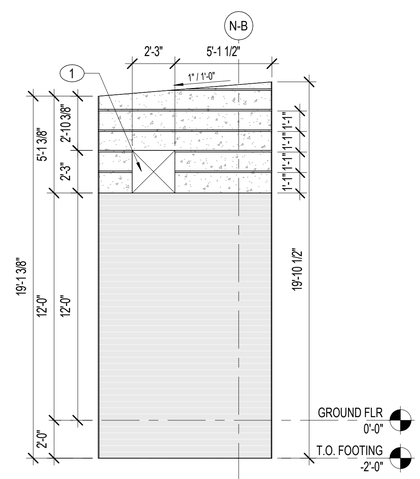

A3 234
1/4" = 1'-0"
OAE201, OAE221

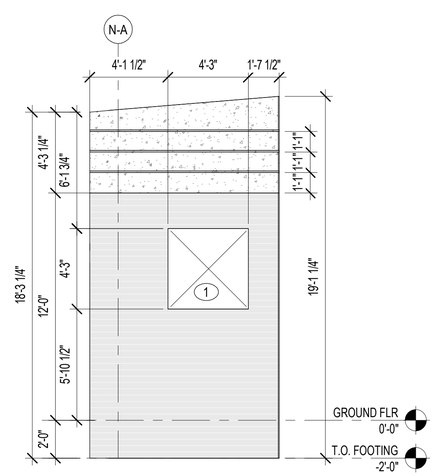

A4 235
1/4" = 1'-0"
OAE201, OAE221

NOTES:

SHEET NOTES:

A REFER TO SHEET OAE001 FOR GENERAL ABBREVIATIONS AND ARCHITECTURAL SYMBOLS.

B REFER TO SHEET OAE221 FOR PRECAST PANEL KEY PLAN.

C PANEL ELEVATIONS ARE MEANT TO BE A DESIGN GUIDE. PRECAST MANUFACTURER TO VERIFY FINAL DIMENSIONS AND PRECAST PENETRATIONS PRIOR TO FABRICATION.

D PRECAST PANELS ARE BASED ON A 1" JOINT BETWEEN PANELS. PRECAST PANEL REVEALS ARE BASED ON A 3/4" REVEAL.

E REFER TO SHEETS OAE531-OAE532 FOR TYPICAL PRECAST JOINT SEALANT, REVEAL/JOINT DIMENSIONS, SEALANT WEEP DETAILS.

F COORDINATE DOOR, WINDOW AND OTHER OPENINGS WITH ARCHITECTURE AND ENGINEERING DRAWINGS.

G COORDINATE BOTTOM OF PANEL WITH STRUCTURAL GRADE BEAM LOCATIONS.

H THE NUMBER OF PANEL TYPES CAN BE REDUCED PER CONCRETE PANEL MANUFACTURER RECOMMENDATIONS, WITH ARCHITECT'S APPROVAL.

I COORDINATE ALL DEVICES & OPENINGS ON PRECAST PANELS.

KEY NOTES (00)

1 COORDINATE UTILITY OPENING AND PENETRATIONS IN PRECAST, TYPICAL. REFER TO ELECTRICAL, MECHANICAL, AND PLUMBING DRAWINGS FOR MORE INFORMATION

2 PRECAST PANEL JOINT, 1 INCH, TYPICAL. REFER TO SHEETS OAE531-OAE532 FOR TYPICAL PRECAST JOINT DETAILS.

3 ROUGH OPENING FOR DOOR.

EXTERIOR FINISH LEGEND		
PC-1	ARCHITECTURAL PRECAST CONCRETE SANDBLAST LIGHT - PCI 110	
PC-2	ARCHITECTURAL PRECAST CONCRETE SANDBLAST MEDIUM - PCI 110	

0 1' 5' 10' 15'
1/4" = 1'-0" GRAPHIC SCALE

NOTE:
IF THIS DRAWING IS LESS THAN 34" X 22"
IT IS A REDUCED SIZE DRAWING

SYM	DESCRIPTION	DATE	APPR
1	MOD P00005	05/2023	
2	MOD P00006 AND MOD P00007	10/2025	

NAVFAC

STATE OF FLORIDA
BILLY KEITH HOLLOWAY
AR93022
11/13/23
REGISTERED ARCHITECT
SEAL

BAMFORTH
ARCHITECTURE ENGINEERING

AE INFO

APPROVED
FOR COMMANDER NAVFAC 11/21/2025

ACTIVITY
Approved by J. Scott Roberts,
Asset Management Branch Head &
Supervisory Facility Planner, PWD
Beaufort, SC via email.

SATISFACTORY TO DATE	12/15/2022
DES EAD / DRW KJF / CHK BKH	
PMDM	KTB / RLH
BRANCH MANAGER	CGM
CHIEF ENG/ARCH	EJA
FP ENGINEER	DSN

DEPARTMENT OF THE NAVY
NAVAL FACILITIES ENGINEERING SYSTEMS COMMAND
DC CODE: MCAS BEAUFORT

NAVAL FACILITIES ENGINEERING SYSTEMS COMMAND ~ MID-ATLANTIC
NORFOLK, VA

BEAUFORT, SC
P-475 AIRCRAFT MAINTENANCE HANGAR - VOLUME 3 (OSF OPTION)
OSF / SHOP ANNEX - PRECAST PANEL ELEVATIONS

SCALE:	As indicated
EPROJECT NO.:	1363603
CONSTR. CONTR. NO.	
NAVFAC DRAWING NO.	12860144
SHEET 943 OF 1412	

OAE225

DRAWFORM REVISION: 25 AUGUST 2020

Autodesk Docs://20043 MFA/T 103 F35 Maintenance Hangar/20043 F35 Maint Hangar_OSF Shop Annex.rvt
11/13/2025 9:09:24 PM

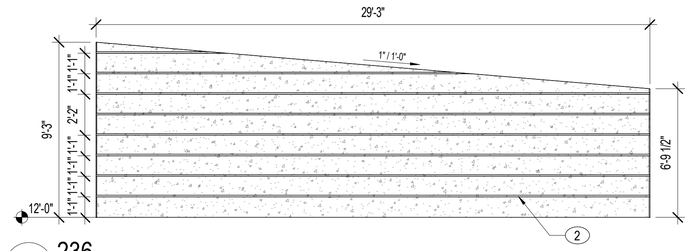

D1 236
1/4" = 1'-0"
OAE201, OAE221

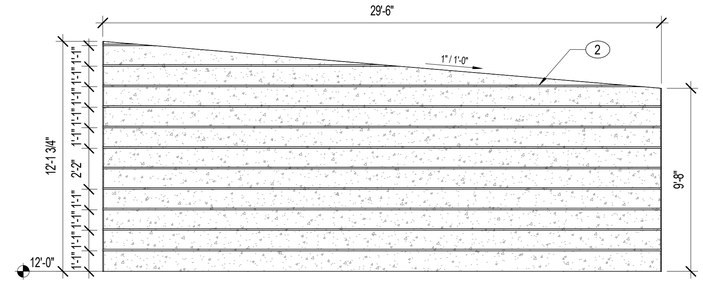

D3 237
1/4" = 1'-0"
OAE201, OAE221

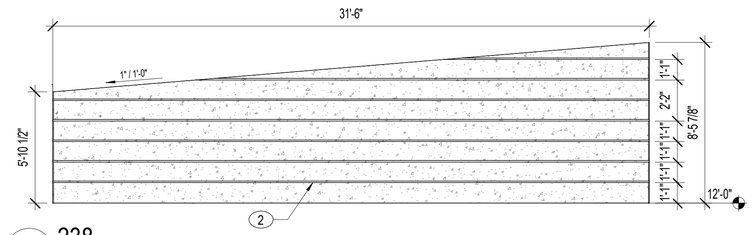

C3 238
1/4" = 1'-0"
OAE201, OAE221

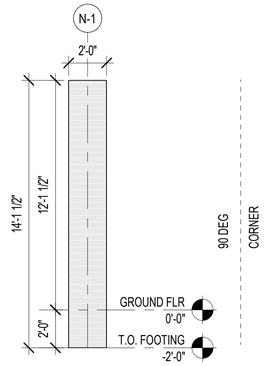

B1 239
1/4" = 1'-0"
OAE201, OAE202, OAE221

90 DEG CORNER

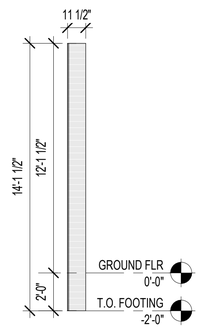

B2 239.1 (RETURN)
1/4" = 1'-0"
OAE201, OAE202, OAE221

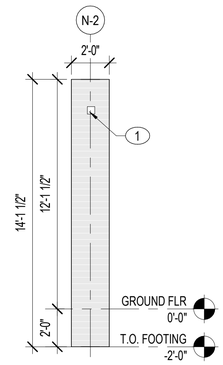

B3 240
1/4" = 1'-0"
OAE201, OAE221

90 DEG CORNER

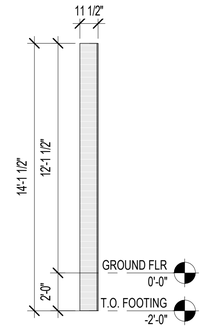

B4 240.1 (RETURN)
1/4" = 1'-0"
OAE201, OAE202, OAE221

NOTES:

SHEET NOTES:

A REFER TO SHEET OAE001 FOR GENERAL ABBREVIATIONS AND ARCHITECTURAL SYMBOLS.
B REFER TO SHEET OAE221 FOR PRECAST PANEL KEY PLAN.
C PANEL ELEVATIONS ARE MEANT TO BE A DESIGN GUIDE. PRECAST MANUFACTURER TO VERIFY FINAL DIMENSIONS AND PRECAST PENETRATIONS PRIOR TO FABRICATION.
D PRECAST PANELS ARE BASED ON A 1" JOINT BETWEEN PANELS. PRECAST PANEL REVEALS ARE BASED ON A 3/4" REVEAL.
E REFER TO SHEETS OAE531-OAE532 FOR TYPICAL PRECAST JOINT SEALANT, REVEAL/JOINT DIMENSIONS, SEALANT WEEP DETAILS.
F COORDINATE DOOR, WINDOW AND OTHER OPENINGS WITH ARCHITECTURE AND ENGINEERING DRAWINGS.
G COORDINATE BOTTOM OF PANEL WITH STRUCTURAL GRADE BEAM LOCATIONS.
H THE NUMBER OF PANEL TYPES CAN BE REDUCED PER CONCRETE PANEL MANUFACTURER RECOMMENDATIONS, WITH ARCHITECT'S APPROVAL.
I COORDINATE ALL DEVICES & OPENINGS ON PRECAST PANELS.

KEY NOTES (00)

1 COORDINATE UTILITY OPENING AND PENETRATIONS IN PRECAST, TYPICAL. REFER TO ELECTRICAL, MECHANICAL, AND PLUMBING DRAWINGS FOR MORE INFORMATION
2 PRECAST PANEL JOINT, 1 INCH, TYPICAL. REFER TO SHEETS OAE531-OAE532 FOR TYPICAL PRECAST JOINT DETAILS.

EXTERIOR FINISH LEGEND

PC-1	ARCHITECTURAL PRECAST CONCRETE SANDBLAST LIGHT - PCI 110
PC-2	ARCHITECTURAL PRECAST CONCRETE SANDBLAST MEDIUM - PCI 110

0 1' 5' 10' 15'
1/4" = 1'-0" GRAPHIC SCALE

NOTE:
IF THIS DRAWING IS LESS THAN 34" X 22"
IT IS A REDUCED SIZE DRAWING

SYM	DESCRIPTION	DATE	APPR
1	MOD P00005	05/2023	
2	MOD P00006 AND MOD P00007	10/2025	

NAVFAC

STATE OF FLORIDA
BILLY KEITH HOLLOWAY
AR93022
REGISTERED ARCHITECT
11.13.23
SEAL

BAMFORTH
CONSULTING ARCHITECTS

AE INFO

APPROVED
FOR COMMANDER NAVFAC 11/21/2025

ACTIVITY
Approved by J. Scott Roberts,
Asset Management Branch Head &
Supervisory Facility Planner, PWD
Beaufort, SC via email.

SATISFACTORY TO DATE 12/15/2022

DES	EAD	DRW KJF	CHK BKH
PM/DM	KTB / RLH		
BRANCH MANAGER	CGM		
CHIEF ENG/ARCH	EJA		
FP ENGINEER	DSN		

DEPARTMENT OF THE NAVY
NAVAL FACILITIES ENGINEERING SYSTEMS COMMAND
DC CORE:
MCAS BEAUFORT

NAVAL FACILITIES ENGINEERING SYSTEMS COMMAND – MID-ATLANTIC
NORFOLK, VA

BEAUFORT, SC

P-475 AIRCRAFT MAINTENANCE HANGAR - VOLUME 3 (OSF OPTION)

OSF / SHOP ANNEX - PRECAST PANEL ELEVATIONS

SCALE: As indicated
EPROJECT NO.: 1363603
CONSTR. CONTR. NO.
NAVFAC DRAWING NO. 12860145
SHEET 944 OF 1412

OAE226

DRAWFORM REVISION: 25 AUGUST 2020

Autodesk Docs://20043 MWAT 502 F35 Maintenance Hangar/20043 F35 Maint Hangar_OSF Shop Annex.rvt
11/3/2025 9:09:28 PM

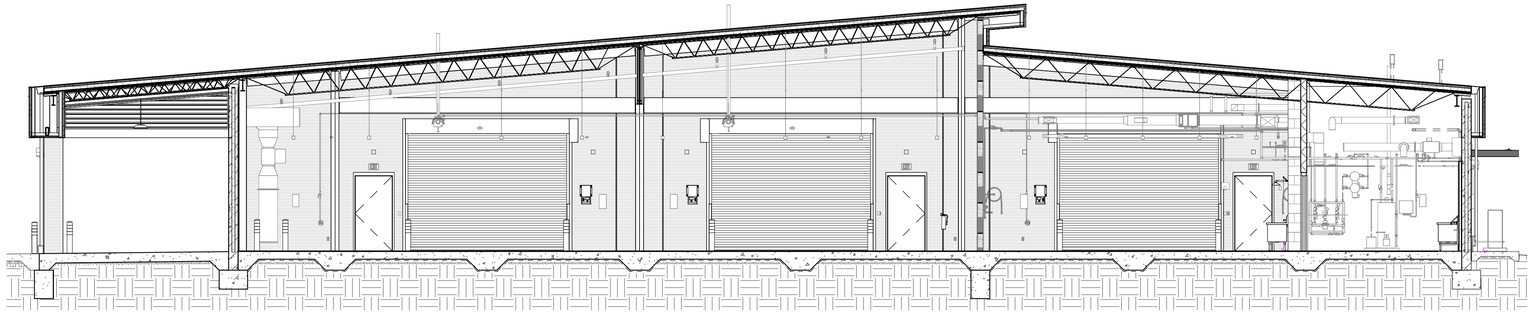

D1 BUILDING SECTION
1/8" = 1'-0"
OAE101, AE201, AE202, OAE301

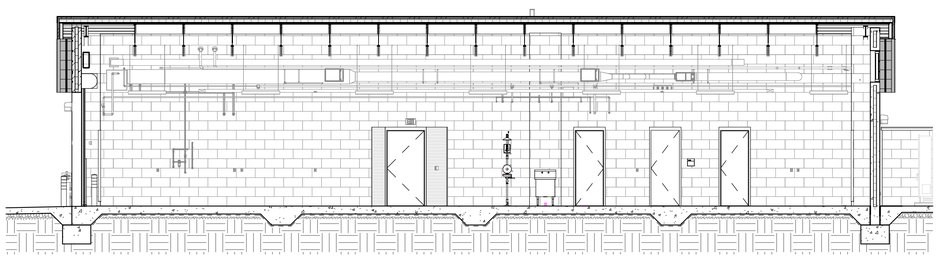

B1 BUILDING SECTION
1/8" = 1'-0"
OAE101, OAE201, OAE202, OAE301

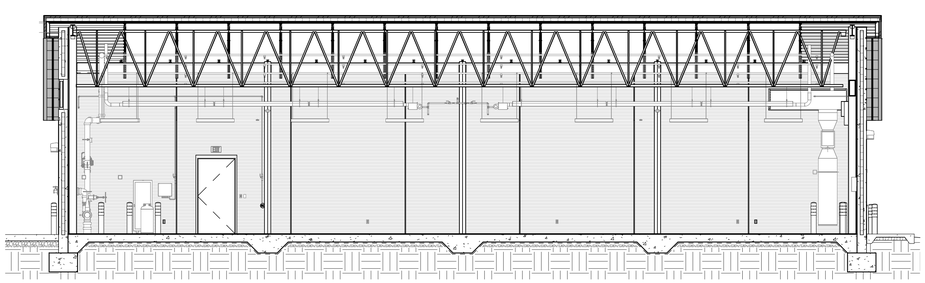

A1 BUILDING SECTION
1/8" = 1'-0"
OAE101, OAE201, OAE202, OAE301

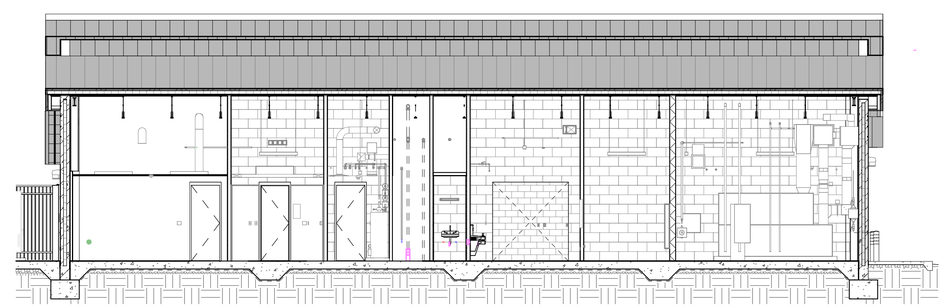

A3 BUILDING SECTION
1/8" = 1'-0"
OAE101, OAE201, OAE202, OAE301

NOTES:

SHEET NOTES:

A REFER TO SHEET OAE001 FOR GENERAL ABBREVIATIONS AND ARCHITECTURAL SYMBOLS.

B ARCHITECTURAL ELEVATION FOR GROUND FLOOR TOP OF SLAB IS DEFINED AS 0'-0". REFER TO CIVIL PLANS FOR SLAB ELEVATIONS RELATIVE TO NORTH AMERICAN VERTICAL DATUM (NAVD) SYSTEM.

C R-VALUE FOR ALL ROOF INSULATION IS TO BE EQUAL TO R-25 MINIMUM CONTINUOUS. INSULATION FOR DESIGN PURPOSES IS BASED ON 1" POLYISOCYANURATE INSULATION = R-6.

D SLOPED ROOFING COMPOSITION IS AN ALUMINUM STANDING SEAM METAL ROOFING PANEL ON 5/8" GLASS MAT COVER BOARD OVER 4" POLYISOCYANURATE RIGID BOARD INSULATION ON METAL DECK. REFER TO SPECIFICATION SECTION 07 61 15. REFER TO STRUCTURAL DRAWINGS FOR DECK INFORMATION.

E REFER TO SHEETS OAE541-OAE542 FOR ROOF PENETRATION AND TYPICAL ROOF DETAILS. COORDINATE ROOF PENETRATIONS WITH PLUMBING AND MECHANICAL DRAWINGS.

F ARCHITECTURAL PRECAST SANDWICH PANEL COMPOSITION IS (EXTERIOR) 4" CONCRETE, 4" RIGID INSULATION, (INTERIOR) 4" CONCRETE.

G STEEL EMBEDS ARE TO BE ENGINEERED AND PROVIDED BY PRECAST MANUFACTURER. COORDINATE WITH PRECAST MANUFACTURER FOR LOCATIONS AND DETAILS.

H REFER TO SHEETS OAE111 FOR INTERIOR CEILING CONDITIONS.

I REFER TO VOLUME 1, SHEETS CS014, CG104, AND CG108 FOR CIVIL INFORMATION.

J REFER TO STRUCTURAL DRAWINGS FOR TOP OF STEEL HEIGHTS.

MATERIAL NOTES

KEY NOTES (00)

1 CONCRETE-FILLED STEEL BOLLARD, IMPACT-RATED. REFER TO DETAIL C4/OAE561.
2 PLUMBING EQUIPMENT. REFER TO SHEET OPP101B FOR ADDITIONAL INFORMATION.
3 LIGHTING FIXTURE. REFER TO SHEETS OEL101A-OEL101B AND OEL501-OEL701 FOR ADDITIONAL INFORMATION.
4 WATER METER. REFER TO OPP101B FOR ADDITIONAL INFORMATION.
5 AHU VFD. REFER TO SHEET OEP401 FOR ADDITIONAL INFORMATION.
6 VTR. REFER TO SHEET OPP101A-OPP101B FOR ADDITIONAL INFORMATION. REFER TO C3/OAE541 FOR ROOF PENETRATION DETAIL.
7 AHU. REFER TO SHEET OMH401 FOR ADDITIONAL INFORMATION.
8 WATER HEATER FLUE. REFER TO SHEET OMH101B FOR ADDITIONAL INFORMATION. REFER TO SHEET C3/OAE541 FOR ROOF PENETRATION DETAIL.
9 RADIANT HEATER. REFER TO SHEETS OMH101A AND OMP101A FOR ADDITIONAL INFORMATION.
10 RADIANT HEATER VENT. REFER TO SHEET OMH101A AND OMH502 FOR ADDITIONAL INFORMATION. REFER TO C3/OAE541 FOR ROOF PENETRATION DETAIL.
11 NITROGEN GENERATOR AND NITROGEN TANK. REFER TO SHEETS OFX101 AND OFX501 FOR ADDITIONAL INFORMATION.
12 FIRE SPRINKLER RISERS. REFER TO SHEETS OFX101 AND OFX501 FOR ADDITIONAL INFORMATION.
13 SERVICE SINK. REFER TO SHEET OPP101B FOR ADDITIONAL INFORMATION.
14 STANDING SEAM METAL PANEL, VERTICAL INSTALLATION.
15 GAS METER/REGULATOR. REFER TO OPP101B FOR ADDITIONAL INFORMATION.
16 POROUS FILL, 4 INCHES.

0 5' 10' 20' 30'
1/8" = 1'-0" GRAPHIC SCALE

NOTE:
IF THIS DRAWING IS LESS THAN 34" X 22"
IT IS A REDUCED SIZE DRAWING

SYM	DESCRIPTION	DATE	APPR.
1	MOD P00005	05/2023	
2	MOD P00006 AND MOD P00007	10/2025	

NAVFAC

STATE OF FLORIDA
BILLY KEITH HOLLOWAY
AR93022
REGISTERED ARCHITECT
11.21.25
SEAL

BAMFORTH
CONSULTING ARCHITECTS

AE INFO

APPROVED
FOR COMMANDER NAVFAC 11/21/2025

ACTIVITY
Approved by J. Scott Roberts,
Asset Management Branch Head &
Supervisory Facility Planner, PWD
Beaufort, SC via email.

SATISFACTORY TO DATE	12/15/2022
DES EAD	DRW KJF CHK BKH
PMDM	KTB / RLH
BRANCH MANAGER	CGM
CHIEF ENG/ARCH	EJA
FP ENGINEER	DSN

DEPARTMENT OF THE NAVY
NAVAL FACILITIES ENGINEERING SYSTEMS COMMAND
DC CORE
NAVAL FACILITIES ENGINEERING SYSTEMS COMMAND - MID-ATLANTIC
NORFOLK, VA
MCAS BEAUFORT
BEAUFORT, SC
P-475 AIRCRAFT MAINTENANCE HANGAR - VOLUME 3 (OSF OPTION)
OSF / SHOP ANNEX - BUILDING SECTIONS

SCALE:	1/8" = 1'-0"
EPROJECT NO.:	1363603
CONSTR. CONTR. NO.	
NAVFAC DRAWING NO.	12860146
SHEET	945 OF 1412

OAE301

DRAWFORM REVISION 25 AUGUST 2020

Autodesk Docs://20042 MFA F 503 F35 Maintenance Hangar/20042 F35 Maint Hangar - OSF Shop Annex.rvt
11/3/2025 9:00:38 PM

INSULATION SCHEDULE				
LOCATION	MATERIAL	TYPE	THICKNESS	MIN. R-VALUE
ROOF	072113.R10	RIGID	4"	R-24
WALL	PRECAST MFR.	RIGID	4"	R-24
WALL	072116.R10	BATT	0' - 3 5/8"	R-13.8
UNDERSLAB	072112.R02	RIGID	0' - 3 5/8"	R-18

NOTES:
1. THICKNESS VARIES WITH INSULATION TYPE
2. VALUE OF R-6 PER INCH USED FOR CALCULATION OF TOTAL MIN. R VALUE FOR RIGID INSULATION
3. VALUE OF R-3.8 PER INCH USED FOR CALCULATION OF TOTAL MIN. R VALUE FOR BATT INSULATION.
4 .CI = CONTINUOUS INSULATION
5. UNDERSLAB INSULATION BASED ON 24" LENGTH FROM PERIMETER.

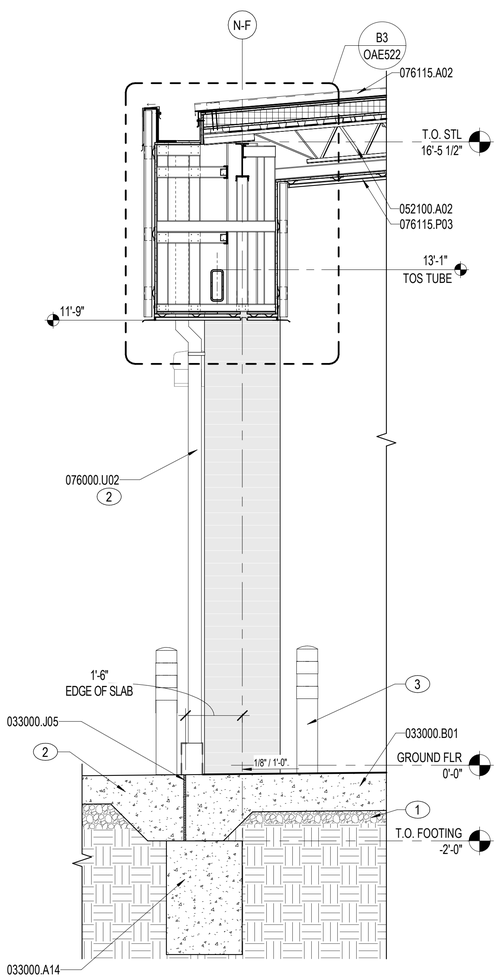

A1 WALL SECTION
1/2" = 1'-0"
OAE101A, OAE101B, OAE301

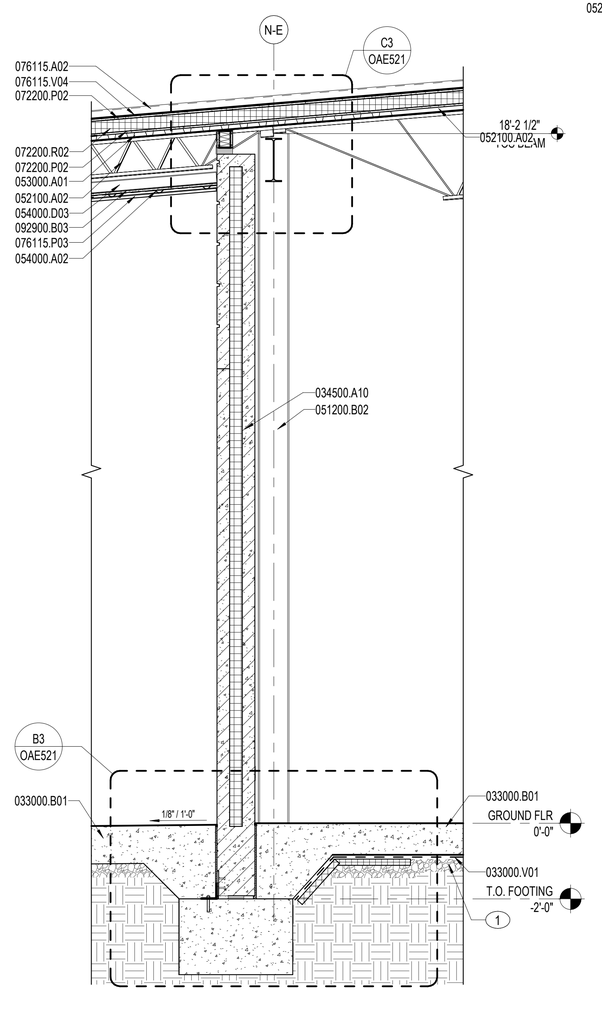

A2 WALL SECTION
1/2" = 1'-0"
OAE101A, OAE101B, OAE301

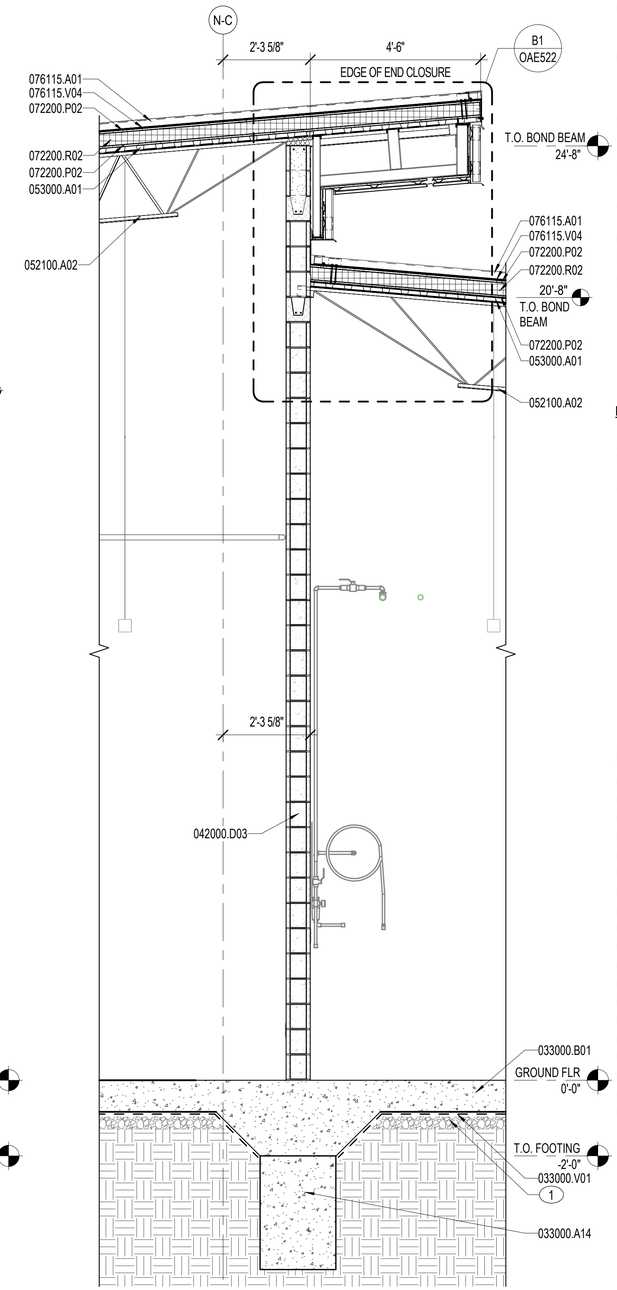

A3 WALL SECTION
1/2" = 1'-0"
OAE101A, OAE101B, OAE301

NOTES:

SHEET NOTES:

A REFER TO SHEET OAE001 FOR GENERAL ABBREVIATIONS AND ARCHITECTURAL SYMBOLS.

B ARCHITECTURAL ELEVATION FOR GROUND FLOOR TOP OF SLAB IS DEFINED AS 0'-0". REFER TO CIVIL PLANS FOR SLAB ELEVATIONS RELATIVE TO NORTH AMERICAN VERTICAL DATUM (NAVD) SYSTEM.

C R-VALUE FOR ALL ROOF INSULATION IS TO BE EQUAL TO R-25 MINIMUM CONTINUOUS. INSULATION FOR DESIGN PURPOSES IS BASED ON 1" POLYISOCYANURATE INSULATION = R-6.

D SLOPED ROOFING COMPOSITION IS AN ALUMINUM STANDING SEAM METAL ROOFING PANEL ON 5/8" GLASS MAT COVER BOARD OVER 4" POLYISOCYANURATE RIGID BOARD INSULATION ON METAL DECK. REFER TO SPECIFICATION SECTION 07 61 15. REFER TO STRUCTURAL DRAWINGS FOR DECK INFOR

E REFER TO SHEETS OAE541-OAE542 FOR ROOF PENETRATION AND TYPICAL ROOF DETAILS. COORDINATE ROOF PENETRATIONS WITH PLUMBING AND MECHANICAL DRAWINGS.

F ARCHITECTURAL PRECAST SANDWICH PANEL COMPOSITION IS (EXTERIOR) 4" CONCRETE, 4" RIGID INSULATION, (INTERIOR) 4" CONCRETE.

G STEEL EMBEDS ARE TO BE ENGINEERED AND PROVIDED BY PRECAST MANUFACTURER. COORDINATE WITH PRECAST MANUFACTURER FOR LOCATIONS AND DETAILS.

H REFER TO SHEET OAE111 FOR INTERIOR CEILING CONDITIONS.

I REFER TO VOLUME 1, SHEETS CS104, CG104, AND CG108 FOR CIVIL INFORMATION.

J REFER TO STRUCTURAL DRAWINGS FOR TOP OF STEEL HEIGHTS.

KEY NOTES (00)

1 POROUS FILL, 4 INCHES.

2 CONCRETE PAVEMENT, 9" THICK, OVER 8" (MIN) AGGREGATE BASE COURSE. REFER TO VOLUME 1, SHEET CS104, FOR MORE INFORMATION.

3 CONCRETE-FILLED STEEL BOLLARD, IMPACT-RATED. REFER TO DETAIL C4/OAE561.

MATERIAL NOTES

033000.A14	GRADE BEAM
033000.B01	CONCRETE SLAB
033000.J05	PREFORMED JOINT FILLER
033000.V01	VAPOR RETARDER
034500.A10	PRECAST CONCRETE INSULATED WALL PANEL
042000.D03	CMU 8"
051200.B02	STEEL WIDE FLANGE COLUMN
052100.A02	OPEN WEB STEEL JOIST
053000.A01	STEEL DECK
054000.A02	METAL CHANNEL
054000.D03	METAL STUD 3 5/8"
072200.P02	GLASS MAT GYPSUM PROTECTION BOARD
072200.R02	ROOF INSULATION BOARD
076000.U02	DOWNSPOUT
076115.A01	STANDING-SEAM METAL ROOF PANEL
076115.A02	STANDING-SEAM METAL ROOF PANEL SYSTEM
076115.P03	METAL SOFFIT PANEL SYSTEM
076115.V04	HIGH TEMPERATURE RESISTANT UNDERLAYMENT
092900.B03	GLASS MAT FACED EXTERIOR GYPSUM SHEATHING 5/8"

0 1' 2' 4' 6' 8'
1/2" = 1'-0" GRAPHIC SCALE

NOTE:
IF THIS DRAWING IS LESS THAN 34" X 22"
IT IS A REDUCED SIZE DRAWING

SYM	DESCRIPTION	DATE	APPR
1	MOD P00005	05/2023	
2	MOD P00006 AND MOD P00007	10/2025	

NAVFAC

STATE OF FLORIDA
BILLY KEITH HOLLOWAY
AR93022
REGISTERED ARCHITECT
SEAL

BAMFORTH
CONSULTING ENGINEERS

AE INFO

APPROVED
FOR COMMANDER NAVFAC 11/21/2025
ACTIVITY Approved by J. Scott Roberts, Asset Management Branch Head & Supervisory Facility Planner, PWD Beaufort, SC via email.
SATISFACTORY TO DATE 12/15/2022
DES EAD DRW MCL CHK BKH
PMDM KTB / RLH
BRANCH MANAGER CGM
CHIEF ENG/ARCH EJA
FP ENGINEER DSN

NAVAL FACILITIES ENGINEERING SYSTEMS COMMAND
NAVAL FACILITIES ENGINEERING SYSTEMS COMMAND ~ MID-ATLANTIC
NORFOLK, VA
DEPARTMENT OF THE NAVY
DC CORE
MCAS BEAUFORT
BEAUFORT, SC
P-475 AIRCRAFT MAINTENANCE HANGAR - VOLUME 3 (OSF OPTION)
OSF / SHOP ANNEX - WALL SECTIONS

SCALE: As indicated
EPROJECT NO.: 1363603
CONSTR. CONTR. NO.
NAVFAC DRAWING NO. 12860147
SHEET 946 OF 1412
OAE311

DRAWFORM REVISION: 26 AUGUST 2020

Autodesk Docs://2042 MFAF 502 735 Maintenance Hangar/2042 F 735 Maint Hangar_OSF Shop Annex.rvt
11/3/2025 3:09:42 PM

INSULATION SCHEDULE				
LOCATION	MATERIAL	TYPE	THICKNESS	MIN. R-VALUE
ROOF	072113.R10	RIGID	4"	R-24
WALL	PRECAST MFR.	RIGID	4"	R-24
WALL	072116.R10	BATT	0' - 3 5/8"	R-13.8
UNDERSLAB	072112.R02	RIGID	0' - 3 5/8"	R-18

NOTES:
1. THICKNESS VARIES WITH INSULATION TYPE
2. VALUE OF R-6 PER INCH USED FOR CALCULATION OF TOTAL MIN. R VALUE FOR RIGID INSULATION
3. VALUE OF R-3.8 PER INCH USED FOR CALCULATION OF TOTAL MIN. R VALUE FOR BATT INSULATION.
4 .CI = CONTINUOUS INSULATION
5. UNDERSLAB INSULATION BASED ON 24" LENGTH FROM PERIMETER.

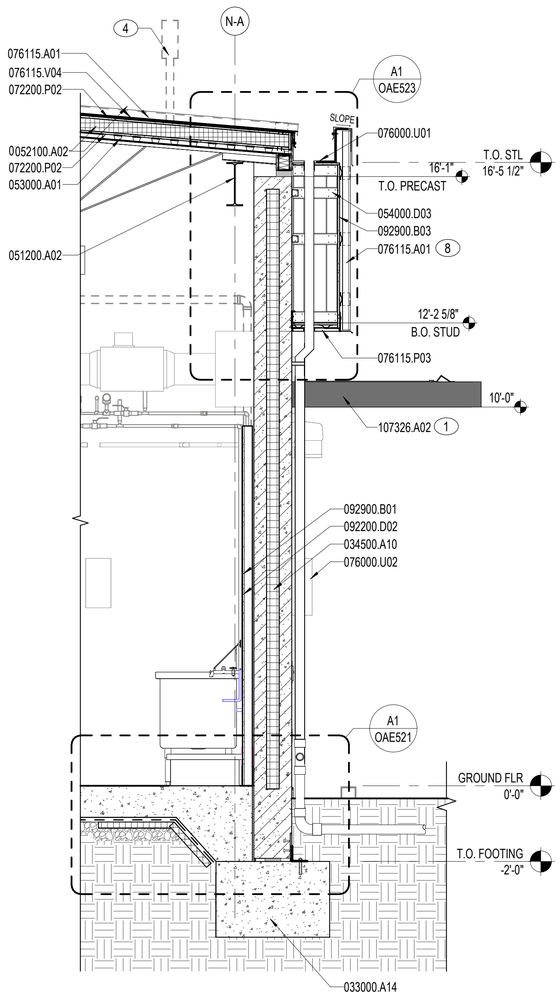

A1 WALL SECTION
1/2" = 1'-0"
OAE101B, OAE301

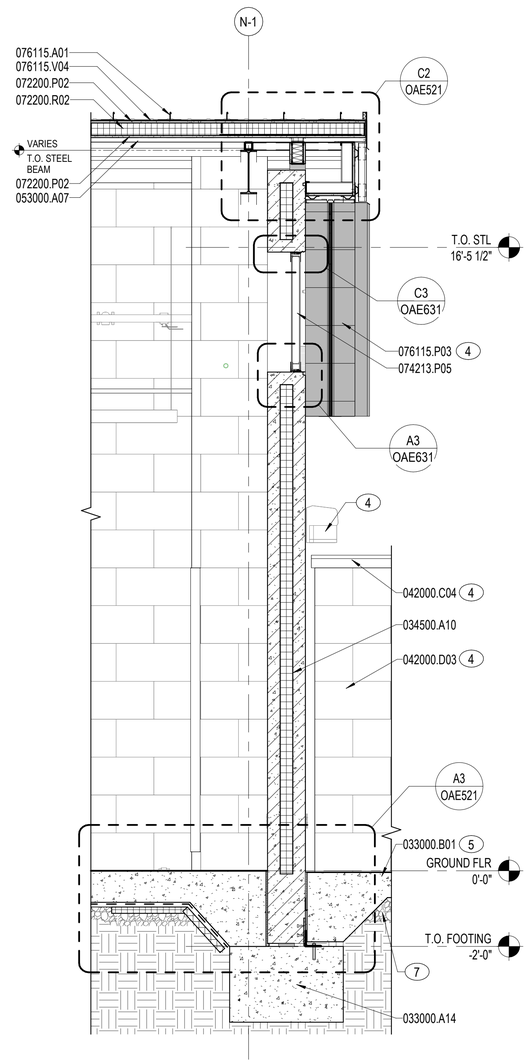

A2 WALL SECTION
1/2" = 1'-0"
OAE101A, OAE101B, OAE301

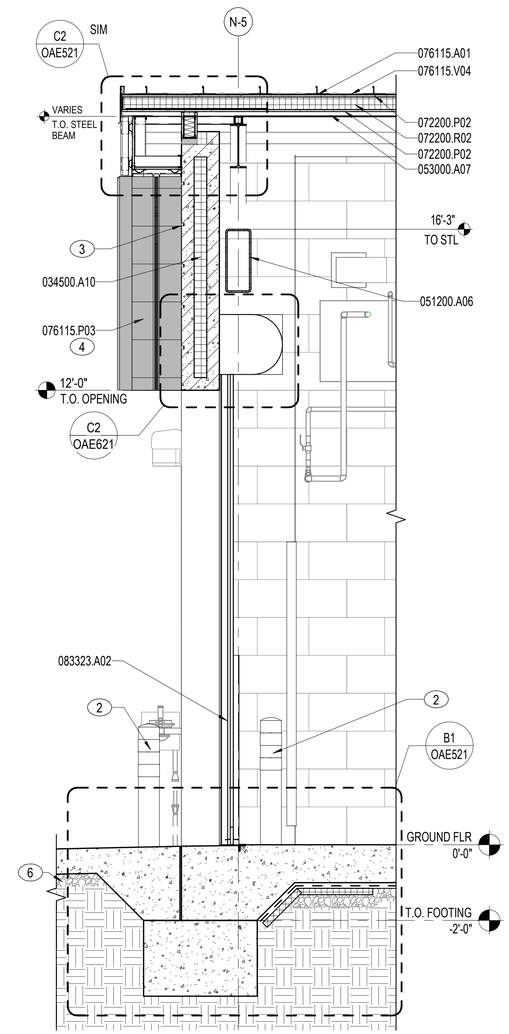

A3 WALL SECTION
1/2" = 1'-0"
OAE101B, OAE301

NOTES:

SHEET NOTES:

A REFER TO SHEET OAE001 FOR GENERAL ABBREVIATIONS AND ARCHITECTURAL SYMBOLS.

B ARCHITECTURAL ELEVATION FOR GROUND FLOOR TOP OF SLAB IS DEFINED AS 0'-0". REFER TO CIVIL PLANS FOR SLAB ELEVATIONS RELATIVE TO NORTH AMERICAN VERTICAL DATUM (NAVD) SYSTEM.

C R-VALUE FOR ALL ROOF INSULATION IS TO BE EQUAL TO R-25 MINIMUM CONTINUOUS. INSULATION FOR DESIGN PURPOSES IS BASED ON 1" POLYISOCYANURATE INSULATION = R-6.

D SLOPED ROOFING COMPOSITION IS AN ALUMINUM STANDING SEAM METAL ROOFING PANEL ON 5/8" GLASS MAT COVER BOARD OVER 4" POLYISOCYANURATE RIGID BOARD INSULATION ON METAL DECK. REFER TO SPECIFICATION SECTION 07 61 15. REFER TO STRUCTURAL DRAWINGS FOR DECK INFOR

E REFER TO SHEETS OAE541-OAE542 FOR ROOF PENETRATION AND TYPICAL ROOF DETAILS. COORDINATE ROOF PENETRATIONS WITH PLUMBING AND MECHANICAL DRAWINGS.

F ARCHITECTURAL PRECAST SANDWICH PANEL COMPOSITION IS (EXTERIOR) 4" CONCRETE, 4" RIGID INSULATION, (INTERIOR) 4" CONCRETE.

G STEEL EMBEDS ARE TO BE ENGINEERED AND PROVIDED BY PRECAST MANUFACTURER. COORDINATE WITH PRECAST MANUFACTURER FOR LOCATIONS AND DETAILS.

H REFER TO SHEET OAE111 FOR INTERIOR CEILING CONDITIONS.

I REFER TO VOLUME 1, SHEETS CS104, CG104, AND CG108 FOR CIVIL INFORMATION.

J REFER TO STRUCTURAL DRAWINGS FOR TOP OF STEEL HEIGHTS.

KEY NOTES (00)

1 REFER TO SHEET OAE561 FOR CANOPY PLAN AND SECTION DETAIL.
2 CONCRETE-FILLED STEEL BOLLARD, IMPACT-RATED. REFER TO DETAIL C4/OAE561.
3 PRECAST PANEL JOINT, 1 INCH, TYPICAL. REFER TO SHEETS OAE531-OAE532 FOR TYPICAL PRECAST JOINT DETAILS.
4 BEYOND.
5 CONCRETE SIDEWALK, BEYOND. REFER TO VOLUME 1, SHEET CS104 FOR ADDITIONAL INFORMATION.
6 POROUS FILL, 4 INCHES.
7 POROUS FILL, 8 INCHES.
8 STANDING SEAM METAL PANEL, VERTICAL INSTALLATION.

MATERIAL NOTES

033000.A14	GRADE BEAM
033000.B01	CONCRETE SLAB
034500.A10	PRECAST CONCRETE INSULATED WALL PANEL
042000.C04	PRECAST CONCRETE COPING
042000.D03	CMU 8"
051200.A02	STEEL WIDE FLANGE BEAM
051200.A06	STEEL TUBE
052100.A02	OPEN WEB STEEL JOIST
053000.A01	STEEL DECK
053000.A07	STEEL ROOF DECK
054000.D03	METAL STUD 3 5/8"
072200.P02	GLASS MAT GYPSUM PROTECTION BOARD
072200.R02	ROOF INSULATION BOARD
074213.P05	TRANSLUCENT PANEL SYSTEM
076000.U01	GUTTER
076000.U02	DOWNSPOUT
076115.A01	STANDING-SEAM METAL ROOF PANEL
076115.P03	METAL SOFFIT PANEL SYSTEM
076115.V04	HIGH TEMPERATURE RESISTANT UNDERLAYMENT
083323.A02	INSULATED OVERHEAD COILING DOOR
092200.D02	METAL STUD 2 1/2"
092900.B01	GYPSUM BOARD, GLASS MAT FACED 5/8"
092900.B03	GLASS MAT FACED EXTERIOR GYPSUM SHEATHING 5/8"
107326.A02	DOOR CANOPY SYSTEM

0 1' 2' 4' 6' 8'
1/2" = 1'-0" GRAPHIC SCALE

NOTE:
IF THIS DRAWING IS LESS THAN 34" X 22"
IT IS A REDUCED SIZE DRAWING

SYM	DESCRIPTION	DATE	APPR
1	MOD P00005	05/2023	
2	MOD P00006 AND MOD P00007	10/2025	

NAVFAC

STATE OF FLORIDA
BILLY KEITH HOLLOWAY
AR93022
REGISTERED ARCHITECT
SEAL

BAMFORTH
CONSULTING ARCHITECTS
AE INFO

APPROVED
FOR COMMANDER NAVFAC 11/21/2025
ACTIVITY Approved by J. Scott Roberts, Asset Management Branch Head & Supervisory Facility Planner, PWD Beaufort, SC via email.
SATISFACTORY TO DATE 12/15/2022
DES EAD DRW MCL CHK BKH
PMDM KTB / RLH
BRANCH MANAGER CGM
CHIEF ENG/ARCH EJA
FP ENGINEER DSN

DEPARTMENT OF THE NAVY
NAVAL FACILITIES ENGINEERING SYSTEMS COMMAND
DC CORE
MCAS BEAUFORT
NAVAL FACILITIES ENGINEERING SYSTEMS COMMAND - MID-ATLANTIC
NORFOLK, VA
BEAUFORT, SC
P-475 AIRCRAFT MAINTENANCE HANGAR - VOLUME 3 (OSF OPTION)
OSF / SHOP ANNEX - WALL SECTIONS

SCALE: As indicated
EPROJECT NO.: 1363603
CONSTR. CONTR. NO.
NAVFAC DRAWING NO. 12860148
SHEET 947 OF 1412
OAE312

DRAWFORM REVISION: 25 AUGUST 2020

Autodesk Docs://20042 MFIA T 503 F35 Maintenance Hangar/20042 F35 Maint Hangar_OSF Shop Annex.rvt
11/3/2025 9:29:47 PM

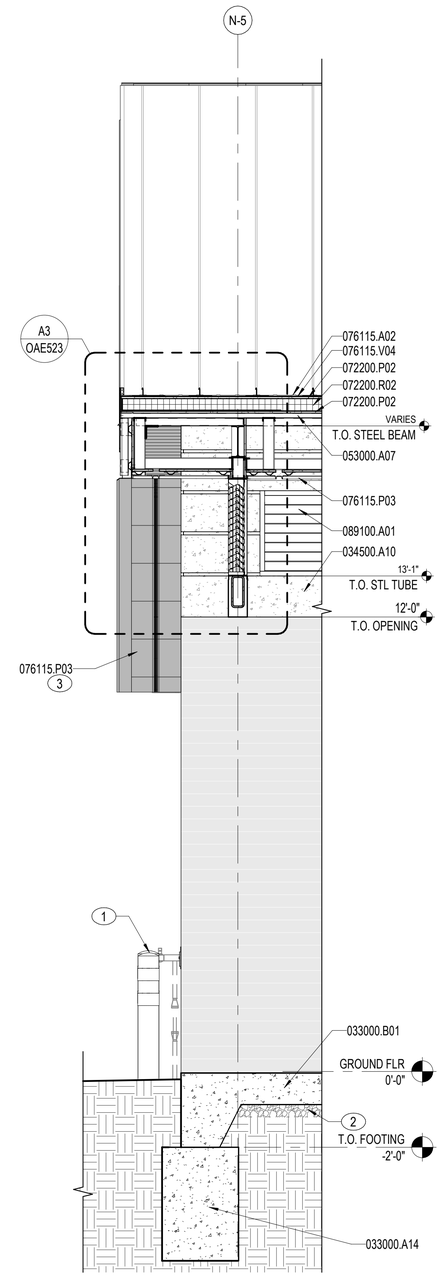

A4 WALL SECTION - ALUMINUM LOUVER

1/2" = 1'-0"

OAE201, OAE202

NOTES:

SHEET NOTES:

A REFER TO SHEET OAE001 FOR GENERAL ABBREVIATIONS AND ARCHITECTURAL SYMBOLS.

B ARCHITECTURAL ELEVATION FOR GROUND FLOOR TOP OF SLAB IS DEFINED AS 0'-0". REFER TO CIVIL PLANS FOR SLAB ELEVATIONS RELATIVE TO NORTH AMERICAN VERTICAL DATUM (NAVD) SYSTEM.

C R-VALUE FOR ALL ROOF INSULATION IS TO BE EQUAL TO R-25 MINIMUM CONTINUOUS. INSULATION FOR DESIGN PURPOSES IS BASED ON 1" POLYISOCYANURATE INSULATION = R-6.

D SLOPED ROOFING COMPOSITION IS AN ALUMINUM STANDING SEAM METAL ROOFING PANEL ON 5/8" GLASS MAT COVER BOARD OVER 4" POLYISOCYANURATE RIGID BOARD INSULATION ON METAL DECK. REFER TO SPECIFICATION SECTION 07 61 15. REFER TO STRUCTURAL DRAWINGS FOR DECK INFOR

E REFER TO SHEETS OAE541-OAE542 FOR ROOF PENETRATION AND TYPICAL ROOF DETAILS. COORDINATE ROOF PENETRATIONS WITH PLUMBING AND MECHANICAL DRAWINGS.

F ARCHITECTURAL PRECAST SANDWICH PANEL COMPOSITION IS (EXTERIOR) 4" CONCRETE, 4" RIGID INSULATION, (INTERIOR) 4" CONCRETE.

G STEEL EMBEDS ARE TO BE ENGINEERED AND PROVIDED BY PRECAST MANUFACTURER. COORDINATE WITH PRECAST MANUFACTURER FOR LOCATIONS AND DETAILS.

H REFER TO SHEET OAE111 FOR INTERIOR CEILING CONDITIONS.

I REFER TO VOLUME 1, SHEETS CS104, CG104, AND CG108 FOR CIVIL INFORMATION.

J REFER TO STRUCTURAL DRAWINGS FOR TOP OF STEEL HEIGHTS.

KEY NOTES (00)

1 CONCRETE-FILLED STEEL BOLLARD, IMPACT-RATED. REFER TO DETAIL C3/OAE561.

2 POROUS FILL, 4 INCHES.

3 BEYOND.

MATERIAL NOTES

033000.A14	GRADE BEAM
033000.B01	CONCRETE SLAB
034500.A10	PRECAST CONCRETE INSULATED WALL PANEL
053000.A07	STEEL ROOF DECK
072200.P02	GLASS MAT GYPSUM PROTECTION BOARD
072200.R02	ROOF INSULATION BOARD
076115.A02	STANDING-SEAM METAL ROOF PANEL SYSTEM
076115.P03	METAL SOFFIT PANEL SYSTEM
076115.V04	HIGH TEMPERATURE RESISTANT UNDERLAYMENT
089100.A01	EXTRUDED ALUMINUM WALL LOUVER

INSULATION SCHEDULE

LOCATION	MATERIAL	TYPE	THICKNESS	MIN. R-VALUE
ROOF	072113.R10	RIGID	4"	R-24
WALL	PRECAST MFR.	RIGID	4"	R-24
WALL	072116.R10	BATT	0' - 3 5/8"	R-13.8
UNDERSLAB	072112.R02	RIGID	0' - 3 5/8"	R-18

NOTES:
1. THICKNESS VARIES WITH INSULATION TYPE
2. VALUE OF R-6 PER INCH USED FOR CALCULATION OF TOTAL MIN. R VALUE FOR RIGID INSULATION
3. VALUE OF R-3.8 PER INCH USED FOR CALCULATION OF TOTAL MIN. R VALUE FOR BATT INSULATION.
4 .CI = CONTINUOUS INSULATION
5. UNDERSLAB INSULATION BASED ON 24" LENGTH FROM PERIMETER.

0 1' 2' 4' 6' 8'

1/2" = 1'-0" GRAPHIC SCALE

NOTE:
IF THIS DRAWING IS LESS THAN 34" X 22"
IT IS A REDUCED SIZE DRAWING

NUM	DESCRIPTION	DATE	APPR
1	MOD P00005	05/2023	
2	MOD P00006 AND MOD P00007	10/2025	

STATE OF FLORIDA
BILLY KEITH HOLLOWAY
AR93022
REGISTERED ARCHITECT
11.3.23
SEAL

BAMFORTH
ARCHITECTURE | ENGINEERING | CONSULTANTS
AE INFO

APPROVED
FOR COMMANDER NAVFAC 11/21/2025

ACTIVITY
Approved by J. Scott Roberts, Asset Management Branch Head & Supervisory Facility Planner, PWD Beaufort, SC via email.

SATISFACTORY TO DATE 12/15/2022

DES	EAD	DRW MCL	CHK BKH
PMDM			KTB / RLH
BRANCH MANAGER			CGM
CHIEF ENG/ARCH			EJA
FP ENGINEER			DSN

DEPARTMENT OF THE NAVY
NAVAL FACILITIES ENGINEERING SYSTEMS COMMAND ~ MID-ATLANTIC
NORFOLK, VA
DC CODE:
MCAS BEAUFORT
BEAUFORT, SC
P-475 AIRCRAFT MAINTENANCE HANGAR - VOLUME 3 (OSF OPTION)
OSF / SHOP ANNEX - WALL SECTIONS

SCALE: As indicated
EPROJECT NO.: 1363603
CONSTR. CONTR. NO.
NAVFAC DRAWING NO.: 12860149
SHEET 948 OF 1412

OAE313

DRAWFORM REVISION: 25 AUGUST 2020

Autodesk Docs://20043 MFA/T 102 F35 Maintenance Hangar/20043 F35 Maint Hangar_OSF Shop Annex.rvt
11/3/2025 9:09:50 PM

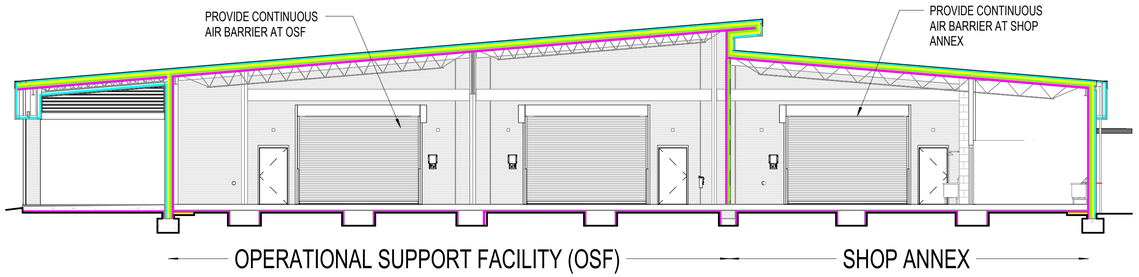

D1 OSF / SHOP ANNEX - AIR BARRIER DIAGRAM - SECTION

3/32" = 1'-0"

OAE471

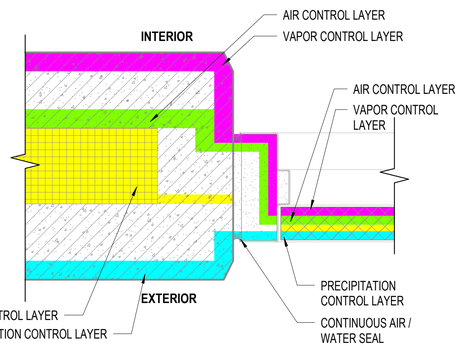

B1 BARRIER LAYER DIAGRAM - DOOR JAMB

NOT TO SCALE

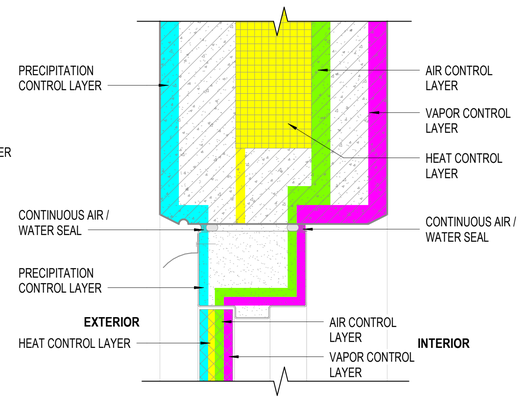

B2 BARRIER LAYER DIAGRAM - DOOR HEAD

NOT TO SCALE

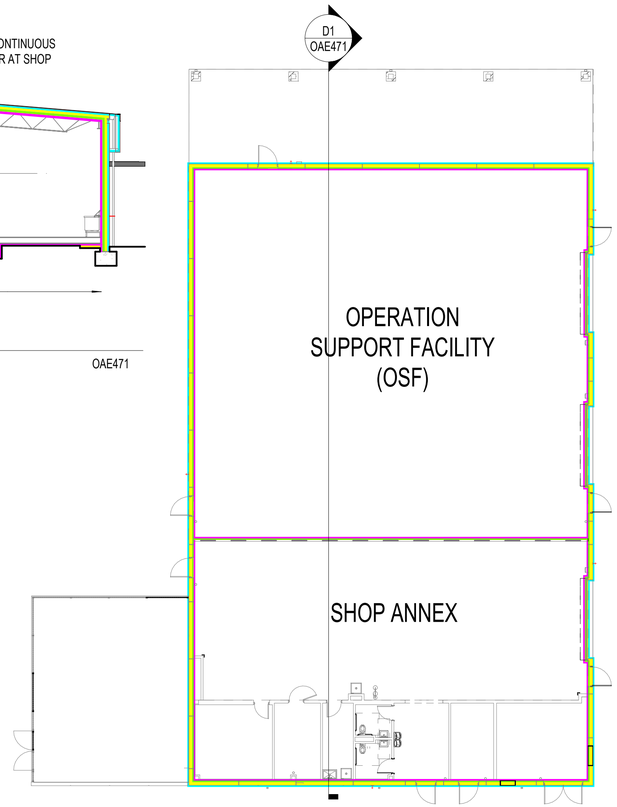

B3 AIR BARRIER DIAGRAM - FLOOR PLAN

1/16" = 1'-0"

NOTES:

SHEET NOTES:

A REFER TO SHEET OAE001 FOR GENERAL ABBREVIATIONS AND ARCHITECTURAL SYMBOLS.

B PROVIDE A CONTIGUOUS AND CONTINUOUS AIR BARRIER ACROSS THE ENTIRE BUILDING ENVELOPE AND ENSURE AIR BARRIER IS IN FULL CONTACT WITH THE CONTINUOUS INSULATION.

C FULLY SEAL ALL SEAMS, GAPS, AND PENETRATIONS IN THE AIR BARRIER.

D INSULATED PRECAST WALL SYSTEM IS CONSIDERED A BARRIER OR FACE-SEALED SYSTEM.

E PROVIDE POLYETHYLENE SHEETING AIR BARRIER.

F WRAP AIR BARRIER INTO DOOR, LOUVER, AND TRANSLUCENT WINDOW OPENINGS. REFER TO SHEET OAE621 FOR EXTERIOR DOOR DETAILS AND SHEET OAE631 FOR TRANSLUCENT WINDOW AND LOUVER DETAILS.

G PROVIDE HIGH-TEMPERATURE UNDERLAYMENT (076115.V04) AT STANDING SEAM ROOF TO SERVE AS AN AIR BARRIER. REFER TO EXTERIOR SECTION DETAIL SHEETS AND ROOF DETAIL SHEETS.

H ALTHOUGH THE DRAWINGS SHOW THE LOCATION OF THE AIR BARRIER SYSTEM COMPONENTS, INCLUDING DETAIL OF JOINTS, INTERSECTIONS, AND PENETRATIONS OF THE SYSTEM, IT IS THE CONTRACTOR'S RESPONSIBILITY TO ASSURE THAT THE AIR BARRIER SYSTEM IS INSTALLED IN A CONTINUOUS ENVELOPE.

I CONTINUOUS AIR BARRIER TESTING TO BE COMPLETED FOR THE SHOP ANNEX AS REQUIRED BY UFC 3-101-01, CHAPTER 3, SECTION 3-6.3. THE OPERATIONAL SUPPORT FACILITY (OSF) SPACE ONLY REQUIRE AIR BARRIER INSPECTION PER THE UFC SINCE IT IS CLASSIFIED AS A SEMI HEATED, WAREHOUSE FUNCTION.

KEY NOTES (00)

1 PERIMETER SEAL SYSTEM COMPONENT: "Z"-TYPE LINTEL SEAL WITH 3/4" BRUSH

AIR BARRIER SURFACE AREAS

ELEMENT	SURFACE AREA	COMMENT
WALLS	9,204 SQ FT	TOTAL WALL AREA
SLAB	9,668 SQ FT	TOTAL FLOOR SLAB
ROOFS	11,007 SQ FT	TOTAL ROOF AREA
OPENINGS	1,068 SQ FT	TOTAL OPENINGS AREA
	30,947 SQ FT	TOTAL SURFACE AREA (EXTERIOR ENVELOPE)

NOTE 1: AIR BARRIER QUANTITIES ABOVE ARE FOR REFERENCE AND APPLY TO INSPECTION ONLY. REFERENCE UFC 3-101-01, 3-6.3.

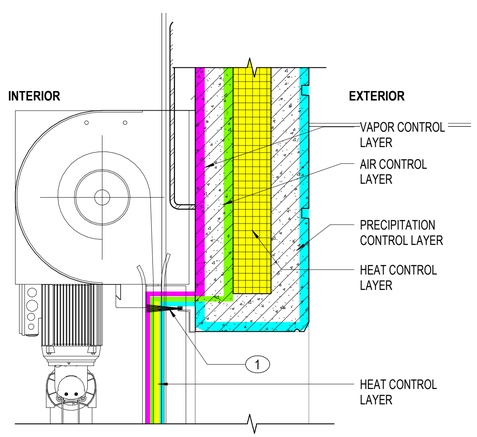

A2 BARRIER LAYER DIAGRAM - OVERHEAD COILING DOOR HEAD

NOT TO SCALE

BARRIER LAYER LEGEND

GRAPHIC	TYPE
	VAPOR CONTROL LAYER
	AIR CONTROL LAYER
	HEAT CONTROL LAYER
	PRECIPITATION LAYER

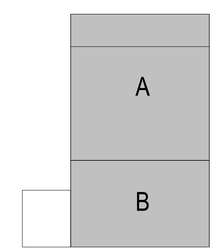

KEYPLAN

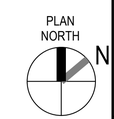

0 5' 10' 20' 30' 40'
3/32" = 1'-0" GRAPHIC SCALE

0 10' 20' 40' 60'
1/16" = 1'-0" GRAPHIC SCALE

NOTE:
IF THIS DRAWING IS LESS THAN 34" X 22"
IT IS A REDUCED SIZE DRAWING

SYM	DESCRIPTION	DATE	APPR
1	MOD P00005	05/2023	
2	MOD P00006 AND MOD P00007	10/2025	

NAVFAC

STATE OF FLORIDA
BILLY KEITH HOLLOWAY
AR93022
REGISTERED ARCHITECT
SEAL

BAMFORTH
AE INFO

APPROVED
FOR COMMANDER NAVFAC 11/21/2025
ACTIVITY Approved by J. Scott Roberts, Asset Management Branch Head & Supervisory Facility Planner, PWD Beaufort, SC via email.

SATISFACTORY TO DATE 12/15/2022
DES EAD DRW MEC CHK BKH
PMDM KTB / RLH
BRANCH MANAGER CGM
CHIEF ENG/ARCH EJA
FP ENGINEER DSN

NAVAL FACILITIES ENGINEERING SYSTEMS COMMAND
NORFOLK, VA
NAVAL FACILITIES ENGINEERING SYSTEMS COMMAND ~ MID-ATLANTIC
DEPARTMENT OF THE NAVY
DC CODE:
MCAS BEAUFORT
BEAUFORT, SC
P-475 AIRCRAFT MAINTENANCE HANGAR - VOLUME 3 (OSF OPTION)
OSF / SHOP ANNEX - AIR BARRIER DIAGRAMS

SCALE: As indicated
EPROJECT NO.: 1363603
CONSTR. CONTR. NO.
NAVFAC DRAWING NO. 12860150
SHEET 949 OF 1412
OAE471

DRAWFORM REVISION: 25 AUGUST 2020

Autodesk Docs://2042 LNFAT 502 F35 Maintenance Hangar/2042 F35 Maint Hangar_OSF Shop Annex.rvt
11/3/2025 9:05:54 PM

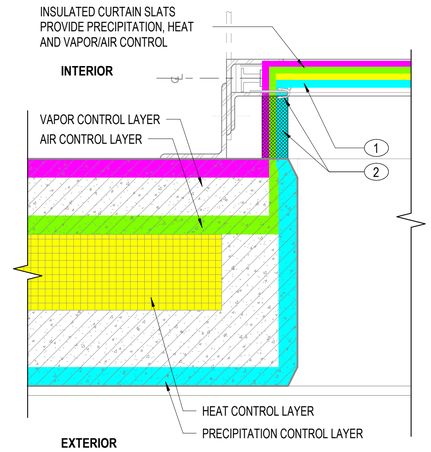

C3 BARRIER LAYER DIAGRAM - DOOR JAMB

NOT TO SCALE

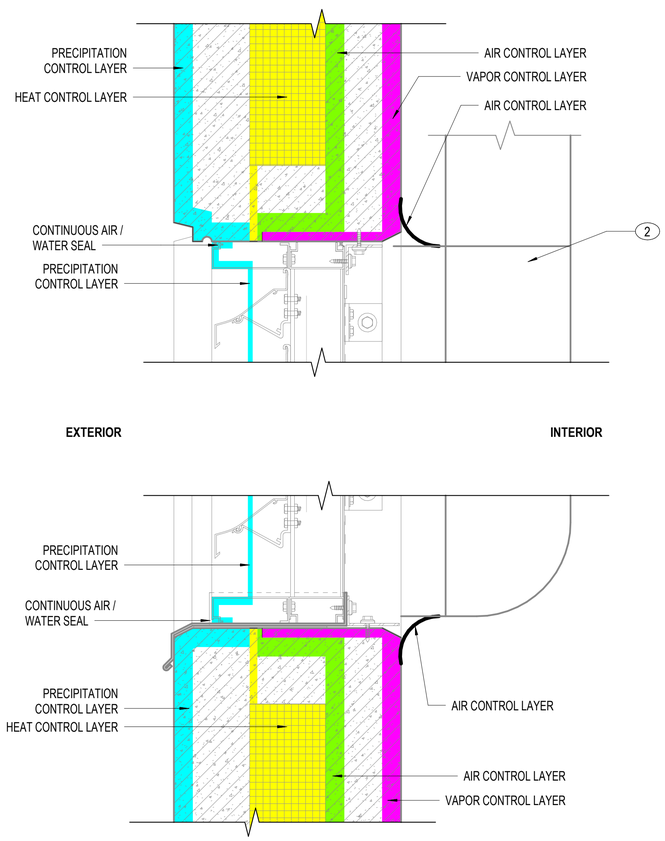

A1 BARRIER LAYER DIAGRAM - LOUVER

NOT TO SCALE

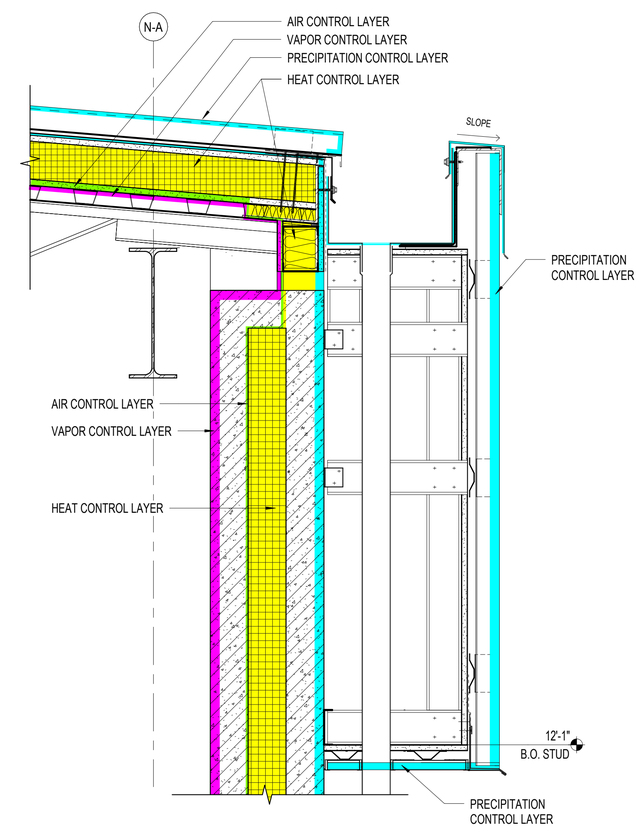

A3 BARRIER LAYER DIAGRAM - SECTION DETAIL

1 1/2" = 1'-0"

NOTES:

SHEET NOTES:

A REFER TO SHEET OAE001 FOR GENERAL ABBREVIATIONS AND ARCHITECTURAL SYMBOLS.

B PROVIDE A CONTIGUOUS AND CONTINUOUS AIR BARRIER ACROSS THE ENTIRE BUILDING ENVELOPE AND ENSURE AIR BARRIER IS IN FULL CONTACT WITH THE CONTINUOUS INSULATION.

C FULLY SEAL ALL SEAMS, GAPS, AND PENETRATIONS IN THE AIR BARRIER.

D INSULATED PRECAST WALL SYSTEM IS CONSIDERED A BARRIER OR FACE-SEALED SYSTEM.

E PROVIDE POLYETHYLENE SHEETING AIR BARRIER.

F WRAP AIR BARRIER INTO DOOR, LOUVER, AND TRANSLUCENT WINDOW OPENINGS. REFER TO SHEET OAE621 FOR EXTERIOR DOOR DETAILS AND SHEET OAE631 FOR TRANSLUCENT WINDOW AND LOUVER DETAILS.

G PROVIDE HIGH-TEMPERATURE UNDERLAYMENT (076115.V04) AT STANDING SEAM ROOF TO SERVE AS AN AIR BARRIER. REFER TO EXTERIOR SECTION DETAIL SHEETS AND ROOF DETAIL SHEETS.

H ALTHOUGH THE DRAWINGS SHOW THE LOCATION OF THE AIR BARRIER SYSTEM COMPONENTS, INCLUDING DETAIL OF JOINTS, INTERSECTIONS, AND PENETRATIONS OF THE SYSTEM, IT IS THE CONTRACTOR'S RESPONSIBILITY TO ASSURE THAT THE AIR BARRIER SYSTEM IS INSTALLED IN A CONTINUOUS ENVELOPE.

I CONTINUOUS AIR BARRIER TESTING TO BE COMPLETED FOR THE SHOP ANNEX AS REQUIRED BY UFC 3-101-01, CHAPTER 3, SECTION 3-6.3. THE OPERATIONAL SUPPORT FACILITY (OSF) SPACE ONLY REQUIRE AIR BARRIER INSPECTION PER THE UFC SINCE IT IS CLASSIFIED AS A SEMI HEATED, WAREHOUSE FUNCTION.

KEY NOTES (00)

1 OVERHEAD COILING DOOR.

2 PERIMETER SEAL SYSTEM COMPONENT: WEATHER SEAL AND FOAM STRIP.

BARRIER LAYER LEGEND

GRAPHIC	TYPE
	VAPOR CONTROL LAYER
	AIR CONTROL LAYER
	HEAT CONTROL LAYER
	PRECIPITATION LAYER

NOTE:
IF THIS DRAWING IS LESS THAN 34" X 22"
IT IS A REDUCED SIZE DRAWING

SYM	DESCRIPTION	DATE	APPR
1	MOD P00005	05/2023	
2	MOD P00006 AND MOD P00007	10/2025	

STATE OF FLORIDA
BILLY KEITH HOLLOWAY
AR93022
REGISTERED ARCHITECT
11.21.23
SEAL

BAMFORTH
ENGINEERING ARCHITECTURE

AE INFO

APPROVED
FOR COMMANDER NAVFAC 11/21/2025

ACTIVITY: Approved by J. Scott Roberts, Asset Management Branch Head & Supervisory Facility Planner, PWD Beaufort, SC via email.

SATISFACTORY TO DATE 12/15/2022

DES	EAD	DRW KJF	CHK BKH
PM/DM	KTB / RLH		
BRANCH MANAGER	CGM		
CHIEF ENG/ARCH	EJA		
FP ENGINEER	DSN		

DEPARTMENT OF THE NAVY
NAVAL FACILITIES ENGINEERING SYSTEMS COMMAND
DC CODE: NAVAL FACILITIES ENGINEERING SYSTEMS COMMAND – MID-ATLANTIC NORFOLK, VA
MCAS BEAUFORT
BEAUFORT, SC
P-475 AIRCRAFT MAINTENANCE HANGAR - VOLUME 3 (OSF OPTION)
OSF / SHOP ANNEX - AIR BARRIER DIAGRAMS

SCALE: As indicated
EPROJECT NO.: 1363603
CONSTR. CONTR. NO.
NAVFAC DRAWING NO. 12860151
SHEET 950 OF 1412

OAE472

DRAWFORM REVISION: 25 AUGUST 2020

Autodesk Docs://00042 MRAF 502 F35 Maintenance Hangar/00042 F35 Maint Hangar_OSF Shop Annex.rvt
11/3/2025 9:09:37 PM

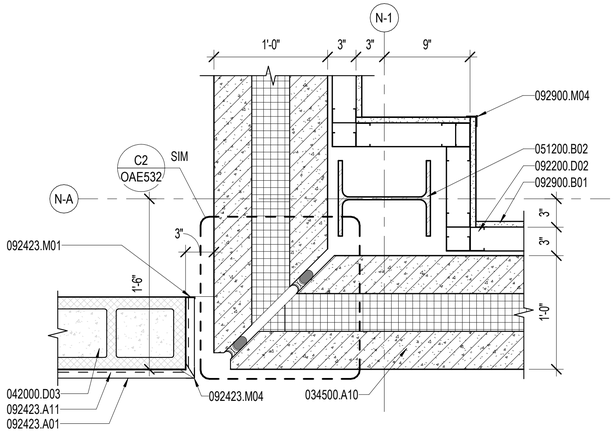

C1 PLAN DETAIL

1 1/2" = 1'-0" OAS401, OAE101B

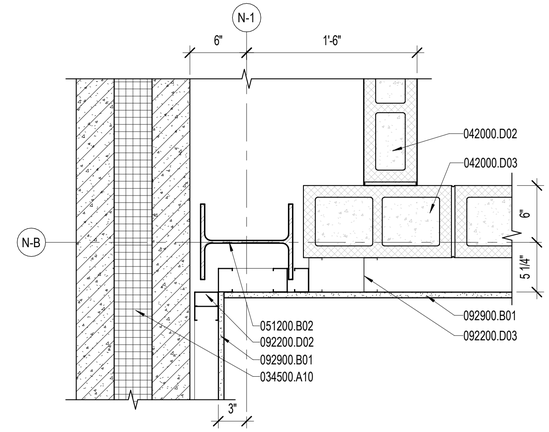

C2 PLAN DETAIL

1 1/2" = 1'-0" OAE101B

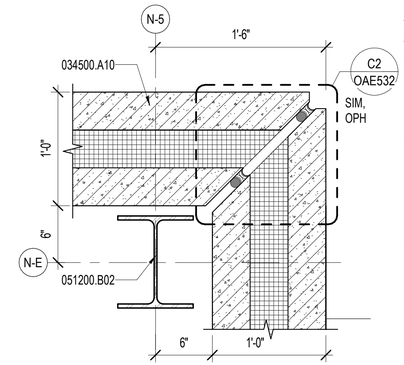

C4 PLAN DETAIL

1 1/2" = 1'-0" OAE101A, OAE101B

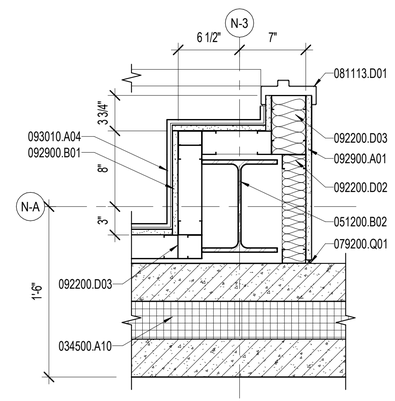

B4 SECTION DETAIL

1 1/2" = 1'-0" OAE101B

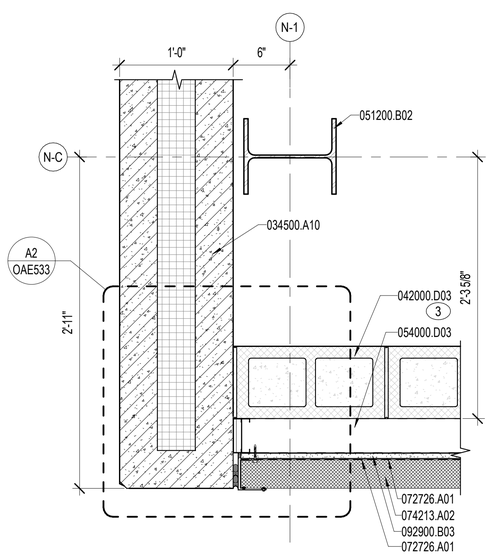

A1 PLAN DETAIL - HIGH WALL

1 1/2" = 1'-0" OAE101A

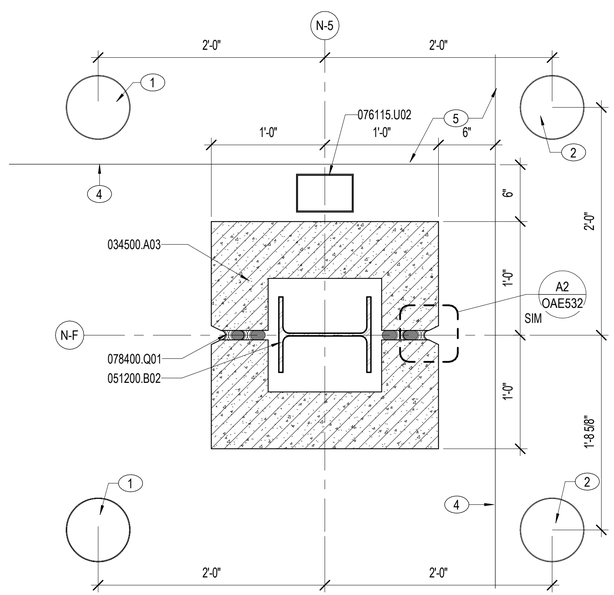

A2 PLAN DETAIL - EXTERIOR COLUMN WRAP

1 1/2" = 1'-0" OAE101A

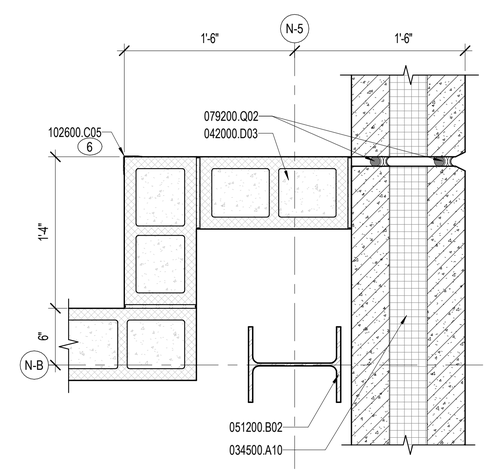

A3 PLAN DETAIL

1 1/2" = 1'-0" OAE101B

NOTES:

SHEET NOTES:

A REFER TO SHEET OAE001 FOR GENERAL ABBREVIATIONS AND ARCHITECTURAL SYMBOLS.

B REFER TO SHEETS OAE531 - OAE532 FOR TYPICAL PRECAST JOINT SEALANT, REVEAL/JOINT DIMENSIONS, SEALANT WEEP DETAILS. REFER TO SHEET OAE532 FOR TYPICAL METAL WALL PANEL DETAILS.

C REFER TO SHEET OAE621 FOR DOOR DETAILS AND SHEET OAE631 FOR LOUVER AND TRANSLUCENT PANEL DETAILS.

D REFER TO SHEET OAE801 FOR PARTITION TYPES.

E REFER TO SHEET OAE821 FOR THROUGH PENETRATION FIRESTOP SYSTEM SCHEDULE AND TYPICAL RATED PARTITION PENETRATION DETAILS.

F REFER TO SHEET OAF601 FOR FINISH SCHEDULE AND FINISH IDENTIFICATION.

G ARCHITECTURAL EXTERIOR DIMENSIONS ARE TO EXTERIOR FACE OF INSULATED PRECAST PANEL AND FACE OF METAL STUD, UNO.

H ARCHITECTURAL DIMENSIONS ARE TO COLUMN GRID, FACE OF MASONRY / CONCRETE, FACE OF METAL STUD, UNO.

KEY NOTES (00)

1 CONCRETE-FILLED STEEL BOLLARD, IMPACT-RATED. REFER TO DETAIL C4/OAE561.

2 CONCRETE-FILLED STEEL BOLLARD, IMPACT-RATED. REFER TO DETAIL C3/OAE561.

3 1 HOUR FIRE RATED WALL

4 EDGE OF SLAB.

5 EDGE OF CONCRETE PAVEMENT. REFER TO VOLUME 1, SHEET CS104, FOR ADDITIONAL INFORMATION.

6 S.S. CORNER GUARD, 2"X2", ADHERED TO CMU WITH STRUCTURAL SEALANT. REFER TO AF601 FOR ADDITIONAL INFORMATION.

MATERIAL NOTES

034500.A03	PRECAST CONCRETE WALL PANEL
034500.A10	PRECAST CONCRETE INSULATED WALL PANEL
042000.D02	CMU 6"
042000.D03	CMU 8"
051200.B02	STEEL WIDE FLANGE COLUMN
054000.D03	METAL STUD 3 5/8"
072726.A01	FLUID-APPLIED AIR BARRIER, VAPOR-RETARDING
074213.A02	INSULATED METAL WALL PANEL SYSTEM
076115.U02	DOWNSPOUT
078400.Q01	FIRESTOPPING SEALANT
079200.Q01	JOINT SEALANT
079200.Q02	BACKSTOP AND SEALANT
081113.D01	STEEL DOOR FRAME
092200.D02	METAL STUD 2 1/2"
092200.D03	METAL STUD 3 5/8"
092423.A01	STUCCO
092423.A11	SELF FURRING DIAMOND MESH LATH
092423.M01	CASING BEAD
092423.M04	CORNERBEAD
092900.A01	GYPSUM BOARD, REGULAR 5/8"
092900.B01	GYPSUM BOARD, GLASS MAT FACED 5/8"
092900.B03	GLASS MAT FACED EXTERIOR GYPSUM SHEATHING 5/8"
092900.M04	CORNERBEAD
093010.A04	PORCELAIN TILE
102600.C05	STAINLESS STEEL CORNER GUARD

0 2" 10" 20" 30"

1½" = 1'-0" GRAPHIC SCALE

NOTE:
IF THIS DRAWING IS LESS THAN 34" X 22"
IT IS A REDUCED SIZE DRAWING

SYM	DESCRIPTION	DATE	APPR
1	MOD P00005	05/2023	
2	MOD P00006 AND MOD P00007	10/2025	

NAVFAC

STATE OF FLORIDA
BILLY KEITH HOLLOWAY
AR93022
REGISTERED ARCHITECT
SEAL

BAMFORTH
AE INFO

APPROVED
FOR COMMANDER NAVFAC 11/21/2025
ACTIVITY Approved by J. Scott Roberts, Asset Management Branch Head & Supervisory Facility Planner, PWD Beaufort, SC via email.
SATISFACTORY TO DATE 12/15/2022

DES	EAD	DRW	KJF	CHK	BKH
PMDM	KTB / RLH				
BRANCH MANAGER	CGM				
CHIEF ENG/ARCH	EJA				
FP ENGINEER	DSN				

DEPARTMENT OF THE NAVY
DC CORE
NAVAL FACILITIES ENGINEERING SYSTEMS COMMAND
NAVAL FACILITIES ENGINEERING SYSTEMS COMMAND ~ MID-ATLANTIC
NORFOLK, VA
MCAS BEAUFORT
BEAUFORT, SC
P-475 AIRCRAFT MAINTENANCE HANGAR - VOLUME 3 (OSF OPTION)
OSF / SHOP ANNEX - EXTERIOR PLAN DETAILS

SCALE: 1 1/2" = 1'-0"
EPROJECT NO.: 1363603
CONSTR. CONTR. NO.
NAVFAC DRAWING NO. 12860152
SHEET 951 OF 1412

OAE501

DRAWFORM REVISION: 26 AUGUST 2020

Autodesk Docs://2042 MFAT 502 735 Maintenance Hangar/2042 F735 Maint Hangar_OSF Shop Annex.rvt
11/3/2025 9:10:22 PM

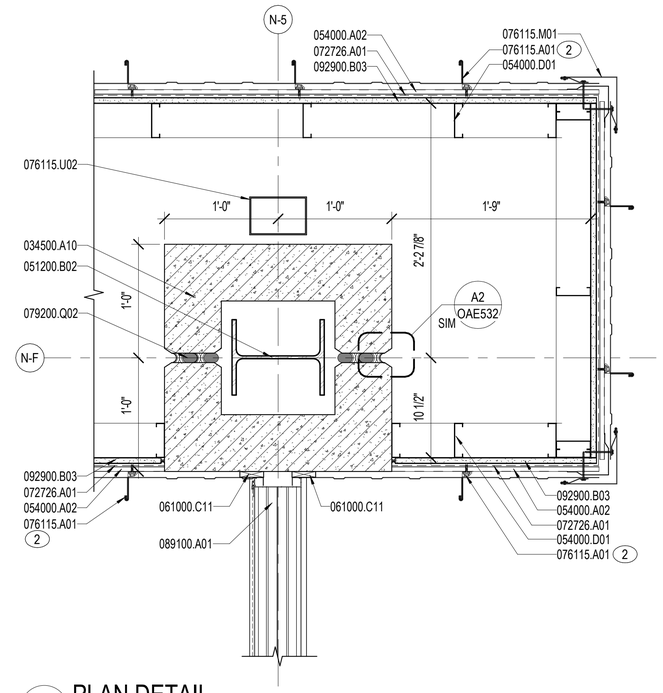

C3 PLAN DETAIL
1 1/2" = 1'-0"

OAE101B, OAE601

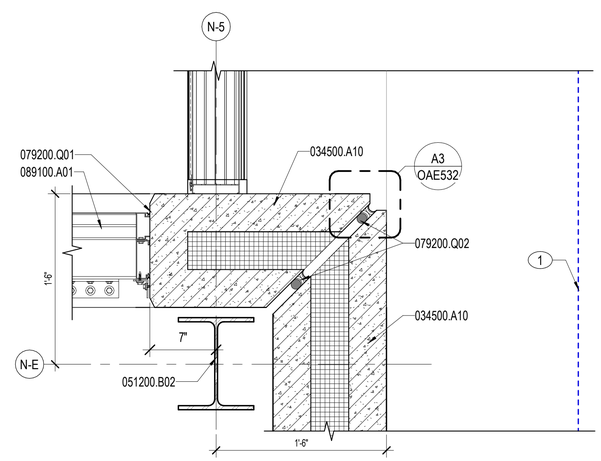

A3 PLAN DETAIL
1 1/2" = 1'-0"

OAE101B, OAE301, OAE601

NOTES:

SHEET NOTES:

A REFER TO SHEET OAE001 FOR GENERAL ABBREVIATIONS AND ARCHITECTURAL SYMBOLS.

B REFER TO SHEETS OAE531 - OAE532 FOR TYPICAL PRECAST JOINT SEALANT, REVEAL/JOINT DIMENSIONS, SEALANT WEEP DETAILS. REFER TO SHEET OAE532 FOR TYPICAL METAL WALL PANEL DETAILS.

C REFER TO SHEET OAE621 FOR DOOR DETAILS AND SHEET OAE631 FOR LOUVER AND TRANSLUCENT PANEL DETAILS.

D REFER TO SHEET OAE801 FOR PARTITION TYPES.

E REFER TO SHEET OAE821 FOR THROUGH PENETRATION FIRESTOP SYSTEM SCHEDULE AND TYPICAL RATED PARTITION PENETRATION DETAILS.

F REFER TO SHEET OAF601 FOR FINISH SCHEDULE AND FINISH IDENTIFICATION.

G ARCHITECTURAL EXTERIOR DIMENSIONS ARE TO EXTERIOR FACE OF INSULATED PRECAST PANEL AND FACE OF METAL STUD, UNO.

H ARCHITECTURAL DIMENSIONS ARE TO COLUMN GRID, FACE OF MASONRY / CONCRETE, FACE OF METAL STUD, UNO.

KEY NOTES (00)

1 ROOF EDGE ABOVE.

2 STANDING SEAM METAL PANEL, VERTICAL INSTALLATION.

MATERIAL NOTES

034500.A10	PRECAST CONCRETE INSULATED WALL PANEL
051200.B02	STEEL WIDE FLANGE COLUMN
054000.A02	METAL CHANNEL
054000.D01	METAL STUD
061000.C11	PRESSURE TREATED WOOD BLOCKING
072726.A01	FLUID-APPLIED AIR BARRIER, VAPOR-RETARDING
076115.A01	STANDING-SEAM METAL ROOF PANEL
076115.M01	METAL TRIM
076115.U02	DOWNSPOUT
079200.Q01	JOINT SEALANT
079200.Q02	BACKSTOP AND SEALANT
089100.A01	EXTRUDED ALUMINUM WALL LOUVER
092900.B03	GLASS MAT FACED EXTERIOR GYPSUM SHEATHING 5/8"

0 2" 10" 20" 30"

1½" = 1'-0" GRAPHIC SCALE

NOTE:
IF THIS DRAWING IS LESS THAN 34" X 22"
IT IS A REDUCED SIZE DRAWING

SYM	DESCRIPTION	DATE	APPR
1	MOD P00005	05/2023	
2	MOD P00006 AND MOD P00007	10/2025	

NAVFAC

STATE OF FLORIDA
BILLY KEITH HOLLOWAY
AR93022
REGISTERED ARCHITECT
11/21/23
SEAL

BAMFORTH
CONSULTING ARCHITECTS

AE INFO

APPROVED
FOR COMMANDER NAVFAC 11/21/2025

ACTIVITY: Approved by J. Scott Roberts, Asset Management Branch Head & Supervisory Facility Planner, PWD Beaufort, SC via email.

SATISFACTORY TO DATE 12/15/2022

DES	EAD	DRW MCL	CHK BKH
PM/DM	KTB / RLH		
BRANCH MANAGER	CGM		
CHIEF ENG/ARCH	EJA		
FP ENGINEER	DSN		

DEPARTMENT OF THE NAVY
NAVAL FACILITIES ENGINEERING SYSTEMS COMMAND
DC CORE
NAVAL FACILITIES ENGINEERING SYSTEMS COMMAND – MID-ATLANTIC
NORFOLK, VA
MCAS BEAUFORT
BEAUFORT, SC
P-475 AIRCRAFT MAINTENANCE HANGAR - VOLUME 3 (OSF OPTION)
OSF / SHOP ANNEX - EXTERIOR PLAN DETAILS

SCALE: 1 1/2" = 1'-0"
EPROJECT NO.: 1363603
CONSTR. CONTR. NO.
NAVFAC DRAWING NO. 12860153
SHEET 952 OF 1412

OAE502

DRAWFORM REVISION: 25 AUGUST 2020

Autodesk Docs://20042-MFA1 503 F35 Maintenance Hangar/20042 F35 Maint Hangar_OSF Shop Annex.rvt
11/3/2025 9:10:06 PM

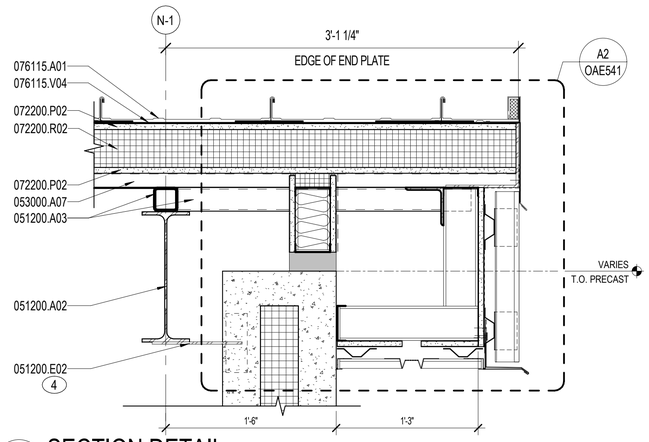

C2 SECTION DETAIL
1 1/2" = 1'-0"
OAE301, OAE312

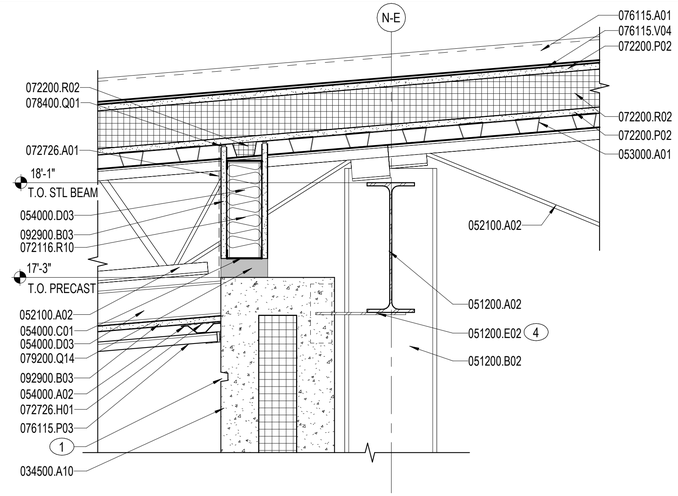

C3 SECTION DETAIL
1 1/2" = 1'-0"
OAE311

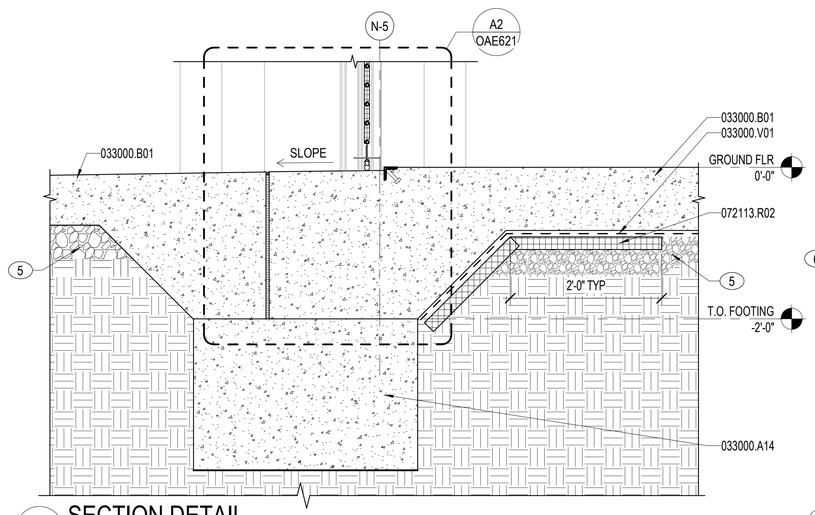

B1 SECTION DETAIL
1" = 1'-0"
OAE312

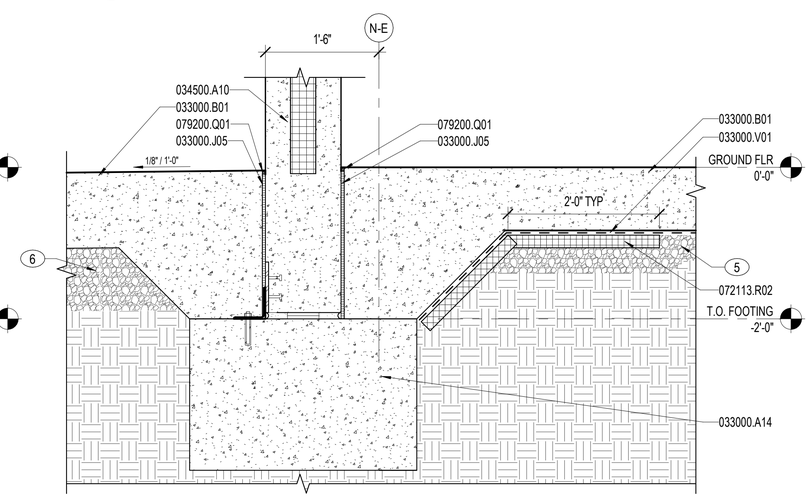

B3 SECTION DETAIL
1" = 1'-0"
OAE311

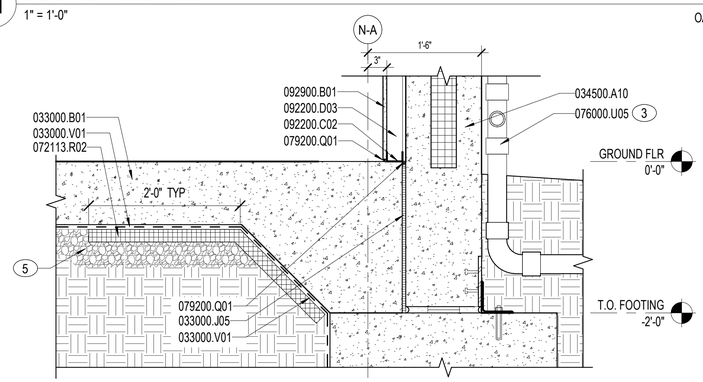

A1 SECTION DETAIL
1" = 1'-0"
OAE312

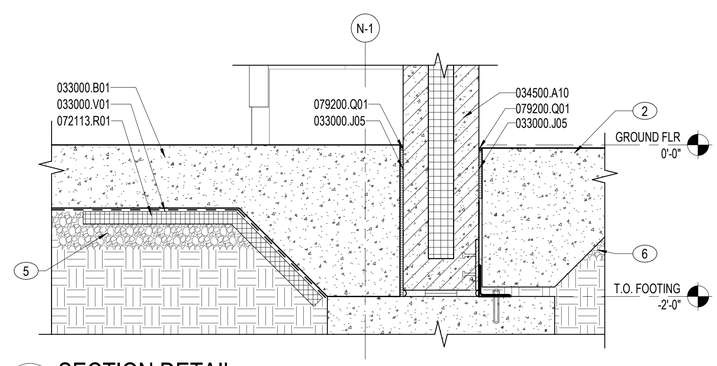

A3 SECTION DETAIL
1" = 1'-0"
OAE312

NOTES:

SHEET NOTES:

A REFER TO SHEET OAE001 FOR GENERAL ABBREVIATIONS AND ARCHITECTURAL SYMBOLS.

B REFER TO VOLUME 1, SHEETS CS014, CG104, AND CG108 FOR CIVIL INFORMATION.

C REFER TO SHEET OAE111 FOR INTERIOR CEILING CONDITIONS.

D REFER TO SHEETS OAE531-OAE532 FOR TYPICAL PRECAST JOINT SEALANT, REVEAL/JOINT DIMENSIONS, SEALANT WEEP DETAILS. REFER TO SHEET OAE532 FOR TYPICAL METAL WALL PANEL DETAILS.

E REFER TO SHEETS OAE541-OAE542 FOR ROOF PENETRATION AND TYPICAL ROOF DETAILS. COORDINATE ROOF PENETRATIONS WITH PLUMBING AND MECHANICAL DRAWINGS.

F REFER TO SHEETS OAE621 FOR DOOR DETAILS AND SHEET OAE631 FOR LOUVER AND TRANSLUCENT PANEL DETAILS.

G REFER TO SHEET OAE801 FOR PARTITION TYPES.

H REFER TO SHEET OAE821 FOR THROUGH PENETRATION FIRESTOP SYSTEM SCHEDULE AND TYPICAL RATED PARTITION PENETRATION DETAILS.

I REFER TO SHEET OAF601 FOR FINISH SCHEDULE AND FINISH IDENTIFICATION.

J ARCHITECTURAL EXTERIOR DIMENSIONS ARE TO EXTERIOR FACE OF INSULATED PRECAST PANEL AND FACE OF METAL STUD, UNO.

K ARCHITECTURAL DIMENSIONS ARE TO COLUMN GRID, FACE OF MASONRY / CONCRETE, FACE OF METAL STUD, UNO.

KEY NOTES (00)

1 PRECAST PANEL JOINT, 1 INCH, TYPICAL. REFER TO SHEETS OAE531-OAE532 FOR TYPICAL PRECAST JOINT DETAILS.

2 CONCRETE PAVEMENT, 8" THICK, OVER 8" (MIN) AGGREGATE BASE COURSE. REFER TO VOLUME 1, SHEET CS104, FOR MORE INFORMATION.

3 DOWNSPOUT BOOT, WHERE APPLICABLE. REFER TO VOLUME 1, SHEET CG513 FOR DOWNSPOUT BOOT DETAILS.

4 "TEE" SHAPED STEEL PLATE. REFER TO DETAIL C2/OSF504.

5 POROUS FILL, 4 INCHES.

6 POROUS FILL, 8 INCHES.

MATERIAL NOTES

033000.A14	GRADE BEAM
033000.B01	CONCRETE SLAB
033000.J05	PREFORMED JOINT FILLER
033000.V01	VAPOR RETARDER
034500.A10	PRECAST CONCRETE INSULATED WALL PANEL
051200.A02	STEEL WIDE FLANGE BEAM
051200.A03	STEEL TUBE BEAM
051200.B02	STEEL WIDE FLANGE COLUMN
051200.E02	STEEL PLATE
052100.A02	OPEN WEB STEEL JOIST
053000.A01	STEEL DECK
053000.A07	STEEL ROOF DECK
054000.A02	METAL CHANNEL
054000.C01	METAL STUD RUNNER TRACK
054000.D03	METAL STUD 3 5/8"
072113.R01	BOARD INSULATION
072113.R02	PERIMETER INSULATION
072116.R10	BLANKET INSULATION, UNFACED
072200.P02	GLASS MAT GYPSUM PROTECTION BOARD
072200.R02	ROOF INSULATION BOARD
072726.A01	FLUID-APPLIED AIR BARRIER, VAPOR-RETARDING
072726.H01	MEMBRANE FLASHING STRIP
076000.U05	DOWNSPOUT BOOT
076115.A01	STANDING-SEAM METAL ROOF PANEL
076115.P03	METAL SOFFIT PANEL SYSTEM
076115.V04	HIGH TEMPERATURE RESISTANT UNDERLAYMENT
078400.Q01	FIRESTOPPING SEALANT
079200.Q01	JOINT SEALANT
079200.Q14	PREFORMED FOAM JOINT FILLER
092200.C02	METAL STUD RUNNER TRACK
092200.D03	METAL STUD 3 5/8"
092900.B01	GYPSUM BOARD, GLASS MAT FACED 5/8"
092900.B03	GLASS MAT FACED EXTERIOR GYPSUM SHEATHING 5/8"

0 6" 1' 2'
1½" = 1'-0" GRAPHIC SCALE

0 6" 1' 2' 3' 4'
1" = 1'-0" GRAPHIC SCALE

NOTE:
IF THIS DRAWING IS LESS THAN 34" X 22"
IT IS A REDUCED SIZE DRAWING

SYM	DESCRIPTION	DATE	APPR
1	MOD P00005	05/2023	
2	MOD P00006 AND MOD P00007	10/2025	

NAVFAC

STATE OF FLORIDA
BILLY KEITH HOLLOWAY
AR93022
REGISTERED ARCHITECT
SEAL

BAMFORTH
ARCHITECTURE & ENGINEERING

AE INFO

APPROVED
FOR COMMANDER NAVFAC 11/21/2025
ACTIVITY Approved by J. Scott Roberts, Asset Management Branch Head & Supervisory Facility Planner, PWD Beaufort, SC via email.
SATISFACTORY TO DATE 12/15/2022
DES EAD DRW MCL CHK BKH
PMDM KTB / RLH
BRANCH MANAGER CGM
CHIEF ENG/ARCH EJA
FP ENGINEER DSN

DEPARTMENT OF THE NAVY
NAVAL FACILITIES ENGINEERING SYSTEMS COMMAND
DC CONE
NAVAL FACILITIES ENGINEERING SYSTEMS COMMAND ~ MID-ATLANTIC
NORFOLK, VA
MCAS BEAUFORT
BEAUFORT, SC
P-475 AIRCRAFT MAINTENANCE HANGAR - VOLUME 3 (OSF OPTION)
OSF / SHOP ANNEX - EXTERIOR SECTION DETAILS

SCALE: As indicated
EPROJECT NO.: 1363603
CONSTR. CONTR. NO.
NAVFAC DRAWING NO.: 12860154
SHEET 953 OF 1412
OAE521

DRAWFORM REVISION: 25 AUGUST 2020

Autodesk Docs://20043 MFA AT 102 F35 Maintenance Hangar/20043F35 Maint Hangar_OSF Shop Annex.rvt
11/3/2025 9:10:10 PM

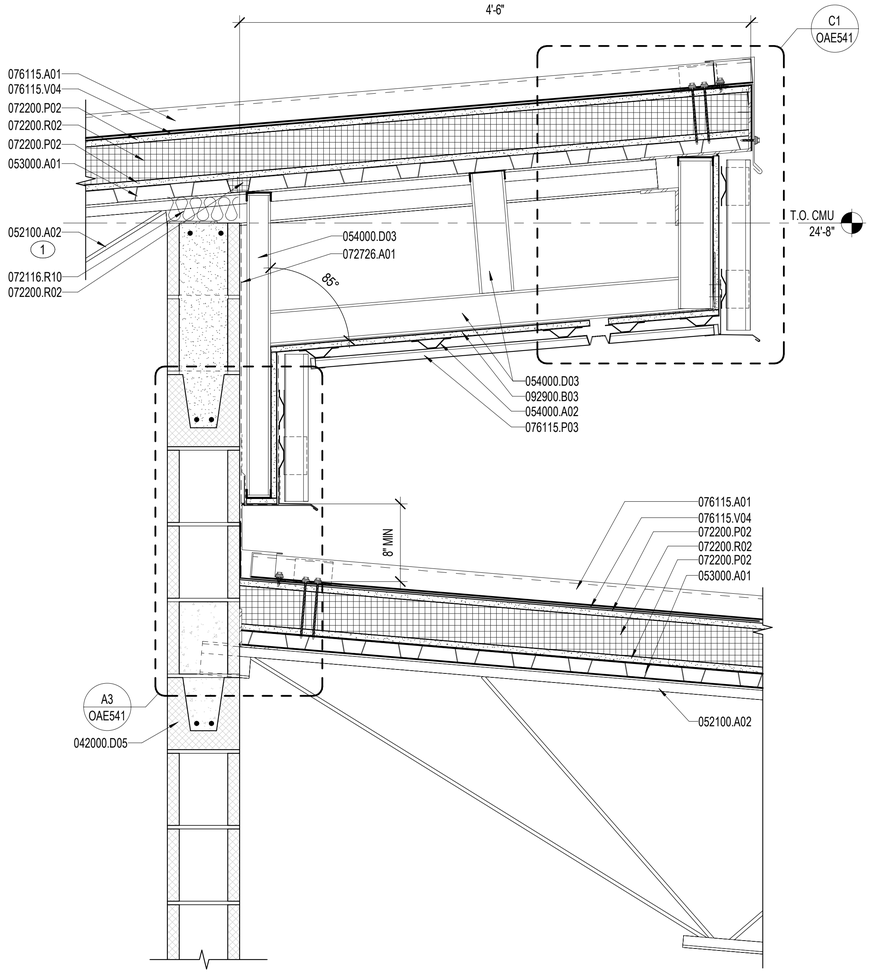

B1 SECTION DETAIL
1 1/2" = 1'-0"
OAE311

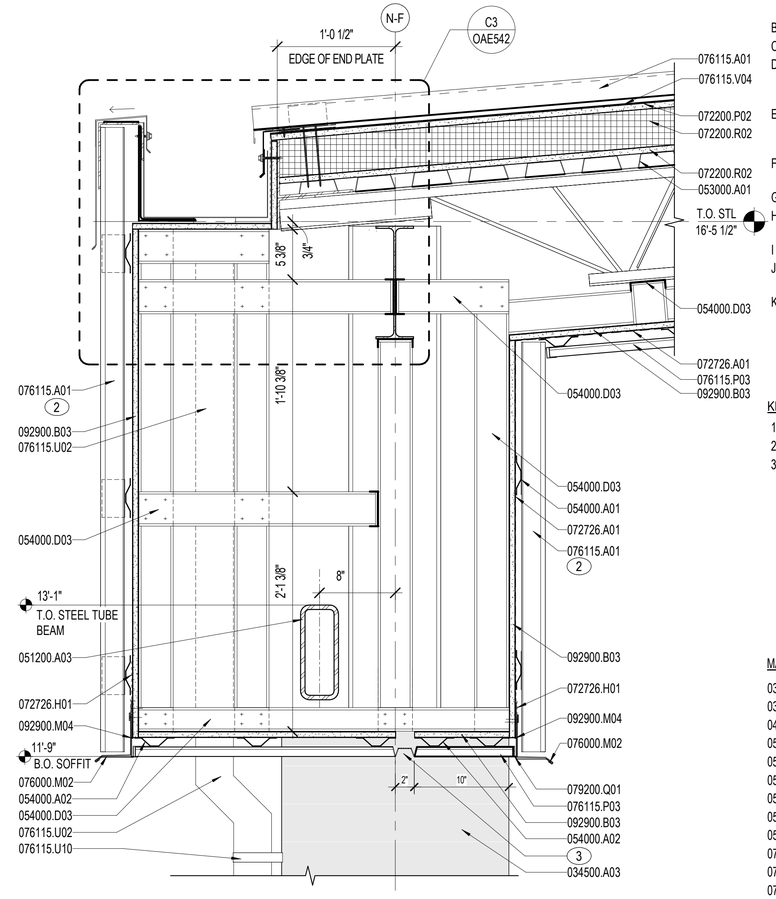

B3 SECTION DETAIL
1 1/2" = 1'-0"
OAE311

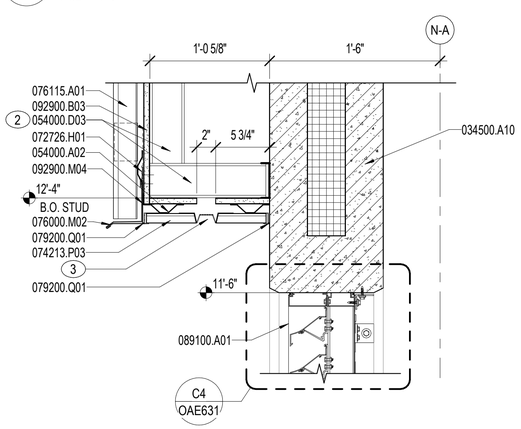

A3 SECTION DETAIL
1 1/2" = 1'-0"
OAE601

NOTES:

SHEET NOTES:

A REFER TO SHEET OAE001 FOR GENERAL ABBREVIATIONS AND ARCHITECTURAL SYMBOLS.

B REFER TO VOLUME 1, SHEETS CS014, CG104, AND CG108 FOR CIVIL INFORMATION.

C REFER TO SHEET OAE111 FOR INTERIOR CEILING CONDITIONS.

D REFER TO SHEETS OAE531-OAE532 FOR TYPICAL PRECAST JOINT SEALANT, REVEAL/JOINT DIMENSIONS, SEALANT WEEP DETAILS. REFER TO SHEET OAE532 FOR TYPICAL METAL WALL PANEL DETAILS.

E REFER TO SHEETS OAE541-OAE542 FOR ROOF PENETRATION AND TYPICAL ROOF DETAILS. COORDINATE ROOF PENETRATIONS WITH PLUMBING AND MECHANICAL DRAWINGS.

F REFER TO SHEETS OAE621 FOR DOOR DETAILS AND SHEET OAE631 FOR LOUVER AND TRANSLUCENT PANEL DETAILS.

G REFER TO SHEET OAE801 FOR PARTITION TYPES.

H REFER TO SHEET OAE821 FOR THROUGH PENETRATION FIRESTOP SYSTEM SCHEDULE AND TYPICAL RATED PARTITION PENETRATION DETAILS.

I REFER TO SHEET OAF601 FOR FINISH SCHEDULE AND FINISH IDENTIFICATION.

J ARCHITECTURAL EXTERIOR DIMENSIONS ARE TO EXTERIOR FACE OF INSULATED PRECAST PANEL AND FACE OF METAL STUD, UNO.

K ARCHITECTURAL DIMENSIONS ARE TO COLUMN GRID, FACE OF MASONRY / CONCRETE, FACE OF METAL STUD, UNO.

KEY NOTES (00)

1 JOIST WITH EXTENDED END. REFER TO DETAIL C2/OSF401.

2 STANDING SEAM METAL PANEL, VERTICAL INSTALLATION.

3 SOFFIT VENT 2" WIDE ALONG EXTENT OF NON-INSULATED EXTERIOR WALL SOFFIT AREAS.

MATERIAL NOTES

034500.A03	PRECAST CONCRETE WALL PANEL
034500.A10	PRECAST CONCRETE INSULATED WALL PANEL
042000.D05	CMU BOND BEAM
051200.A03	STEEL TUBE BEAM
052100.A02	OPEN WEB STEEL JOIST
053000.A01	STEEL DECK
054000.A01	METAL FRAMING
054000.A02	METAL CHANNEL
054000.D03	METAL STUD 3 5/8"
072116.R10	BLANKET INSULATION, UNFACED
072200.P02	GLASS MAT GYPSUM PROTECTION BOARD
072200.R02	ROOF INSULATION BOARD
072726.A01	FLUID-APPLIED AIR BARRIER, VAPOR-RETARDING
072726.H01	MEMBRANE FLASHING STRIP
074213.P03	METAL SOFFIT PANEL SYSTEM
076000.M02	DRIP EDGE
076115.A01	STANDING-SEAM METAL ROOF PANEL
076115.P03	METAL SOFFIT PANEL SYSTEM
076115.U02	DOWNSPOUT
076115.U10	METAL DOWNSPOUT STRAP
076115.V04	HIGH TEMPERATURE RESISTANT UNDERLAYMENT
079200.Q01	JOINT SEALANT
089100.A01	EXTRUDED ALUMINUM WALL LOUVER
092900.B03	GLASS MAT FACED EXTERIOR GYPSUM SHEATHING 5/8"
092900.M04	CORNERBEAD

0 2" 10" 20" 30"
1½" = 1'-0" GRAPHIC SCALE

NOTE:
IF THIS DRAWING IS LESS THAN 34" X 22"
IT IS A REDUCED SIZE DRAWING

SYM	DESCRIPTION	DATE	APPR
1	MOD P00005	05/2023	
2	MOD P00006 AND MOD P00007	10/2025	

NAVFAC

STATE OF FLORIDA
BILLY KEITH HOLLOWAY
AR93022
REGISTERED ARCHITECT
SEAL

BAMFORTH
CONSULTING ARCHITECTS

AE INFO

APPROVED
FOR COMMANDER NAVFAC 11/21/2025

ACTIVITY: Approved by J. Scott Roberts, Asset Management Branch Head & Supervisory Facility Planner, PWD Beaufort, SC via email.

SATISFACTORY TO DATE	12/15/2022
DES EAD / DRW MCL / CHK BKH	
PMDM	KTB / RLH
BRANCH MANAGER	CGM
CHIEF ENG/ARCH	EJA
FP ENGINEER	DSN

DEPARTMENT OF THE NAVY
NAVAL FACILITIES ENGINEERING SYSTEMS COMMAND ~ MID-ATLANTIC
NORFOLK, VA
DC CODE:
MCAS BEAUFORT
BEAUFORT, SC
P-475 AIRCRAFT MAINTENANCE HANGAR - VOLUME 3 (OSF OPTION)
OSF / SHOP ANNEX - EXTERIOR SECTION DETAILS

SCALE:	1 1/2" = 1'-0"
EPROJECT NO.:	1363603
CONSTR. CONTR. NO.	
NAVFAC DRAWING NO.	12860155
SHEET	954 OF 1412

OAE522

DRAWFORM REVISION: 25 AUGUST 2020

Autodesk Docs://2042 MFAT 502 F35 Maintenance Hangar/2042-F35 Maint Hangar_OSF Shop Annex.rvt
11/3/2025 9:10:14 PM

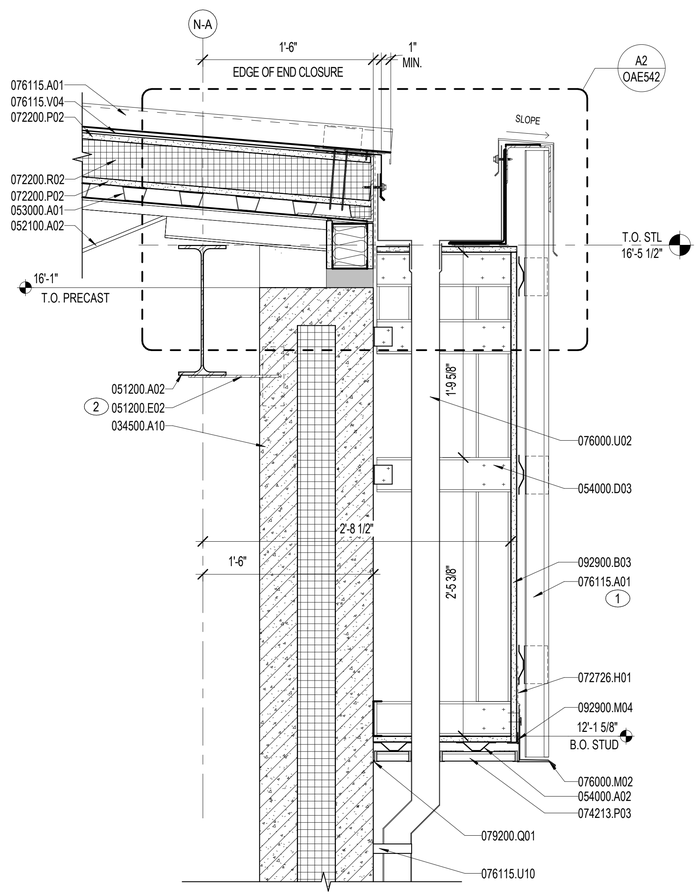

A1 SECTION DETAIL
1 1/2" = 1'-0"
OAE312

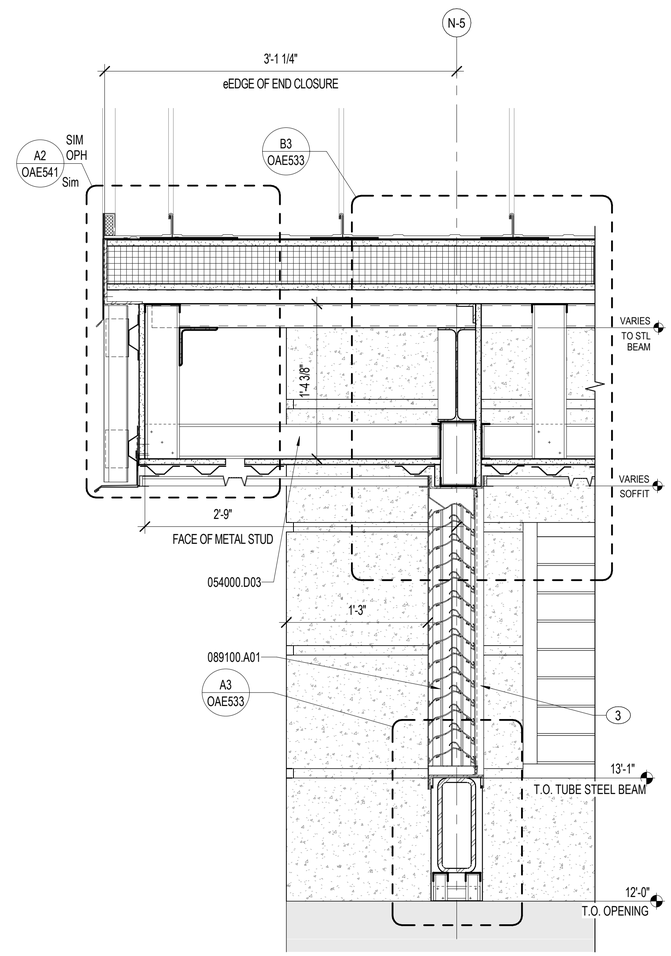

A3 SECTION DETAIL
1 1/2" = 1'-0"
OAE101B, OAE201, OAE313, OAE502

NOTES:

SHEET NOTES:

A REFER TO SHEET OAE001 FOR GENERAL ABBREVIATIONS AND ARCHITECTURAL SYMBOLS.

B REFER TO VOLUME 1, SHEETS CS014, CG104, AND CG108 FOR CIVIL INFORMATION.

C REFER TO SHEET OAE111 FOR INTERIOR CEILING CONDITIONS.

D REFER TO SHEETS OAE531-OAE532 FOR TYPICAL PRECAST JOINT SEALANT, REVEAL/JOINT DIMENSIONS, SEALANT WEEP DETAILS. REFER TO SHEET OAE532 FOR TYPICAL METAL WALL PANEL DETAILS.

E REFER TO SHEETS OAE541-OAE542 FOR ROOF PENETRATION AND TYPICAL ROOF DETAILS. COORDINATE ROOF PENETRATIONS WITH PLUMBING AND MECHANICAL DRAWINGS.

F REFER TO SHEETS OAE621 FOR DOOR DETAILS AND SHEET OAE631 FOR LOUVER AND TRANSLUCENT PANEL DETAILS.

G REFER TO SHEET OAE801 FOR PARTITION TYPES.

H REFER TO SHEET OAE821 FOR THROUGH PENETRATION FIRESTOP SYSTEM SCHEDULE AND TYPICAL RATED PARTITION PENETRATION DETAILS.

I REFER TO SHEET OAF601 FOR FINISH SCHEDULE AND FINISH IDENTIFICATION.

J ARCHITECTURAL EXTERIOR DIMENSIONS ARE TO EXTERIOR FACE OF INSULATED PRECAST PANEL AND FACE OF METAL STUD, UNO.

K ARCHITECTURAL DIMENSIONS ARE TO COLUMN GRID, FACE OF MASONRY / CONCRETE, FACE OF METAL STUD, UNO.

KEY NOTES (00)

1 STANDING SEAM METAL PANEL, VERTICAL INSTALLATION.

2 "TEE" SHAPED STEEL PLATE. REFER TO DETAIL C2/OSF504.

3 ALUMINUM SLEEVE - BY LOUVER MFR.

MATERIAL NOTES

034500.A10	PRECAST CONCRETE INSULATED WALL PANEL
051200.A02	STEEL WIDE FLANGE BEAM
051200.E02	STEEL PLATE
052100.A02	OPEN WEB STEEL JOIST
053000.A01	STEEL DECK
054000.A02	METAL CHANNEL
054000.D03	METAL STUD 3 5/8"
072200.P02	GLASS MAT GYPSUM PROTECTION BOARD
072200.R02	ROOF INSULATION BOARD
072726.H01	MEMBRANE FLASHING STRIP
074213.P03	METAL SOFFIT PANEL SYSTEM
076000.M02	DRIP EDGE
076000.U02	DOWNSPOUT
076115.A01	STANDING-SEAM METAL ROOF PANEL
076115.U10	METAL DOWNSPOUT STRAP
076115.V04	HIGH TEMPERATURE RESISTANT UNDERLAYMENT
079200.Q01	JOINT SEALANT
089100.A01	EXTRUDED ALUMINUM WALL LOUVER
092900.B03	GLASS MAT FACED EXTERIOR GYPSUM SHEATHING 5/8"
092900.M04	CORNERBEAD

0 2" 10" 20" 30"
1½" = 1'-0" GRAPHIC SCALE

NOTE:
IF THIS DRAWING IS LESS THAN 34" X 22"
IT IS A REDUCED SIZE DRAWING

SYM	DESCRIPTION	DATE	APPR.
1	MOD P00005	05/2023	
2	MOD P00006 AND MOD P00007	10/2025	

NAVFAC

STATE OF FLORIDA
BILLY KEITH HOLLOWAY
AR93022
REGISTERED ARCHITECT
12-15-22
SEAL

BAMFORTH
ARCHITECTURE ENGINEERING

AE INFO

APPROVED
FOR COMMANDER NAVFAC 11/21/2025

ACTIVITY
Approved by J. Scott Roberts,
Asset Management Branch Head &
Supervisory Facility Planner, PWD
Beaufort, SC via email.

SATISFACTORY TO DATE	12/15/2022
DES EAD DRW MCL CHK BKH	
PM/DM	KTB / RLH
BRANCH MANAGER	CGM
CHIEF ENG/ARCH	EJA
FP ENGINEER	DSN

DEPARTMENT OF THE NAVY
NAVAL FACILITIES ENGINEERING SYSTEMS COMMAND
DC CODE:
NAVAL FACILITIES ENGINEERING SYSTEMS COMMAND – MID-ATLANTIC
NORFOLK, VA
MCAS BEAUFORT
BEAUFORT, SC
P-475 AIRCRAFT MAINTENANCE HANGAR - VOLUME 3 (OSF OPTION)
OSF / SHOP ANNEX - EXTERIOR SECTION DETAILS

SCALE:	1 1/2" = 1'-0"
EPROJECT NO.:	1363603
CONSTR. CONTR. NO.	
NAVFAC DRAWING NO.	12860156
SHEET	955 OF 1412

OAE523

DRAWFORM REVISION: 25 AUGUST 2020

Autodesk Docs://20042 MIRA F 502 F35 Maintenance Hangar/20042 F 35 Maint Hangar_OSF Shop Annex.rvt
11/3/2025 9:10:17 PM

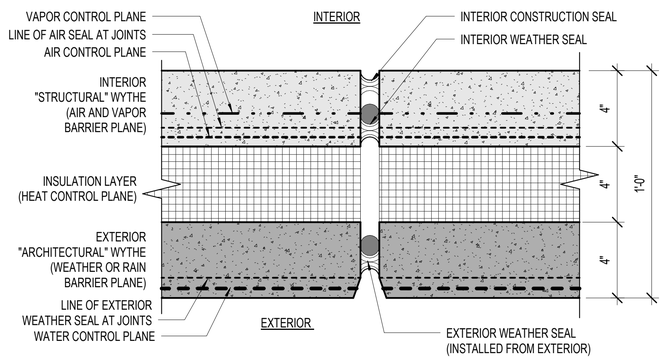

C1 TWO-STAGE JOINT SYSTEM
3" = 1'-0"

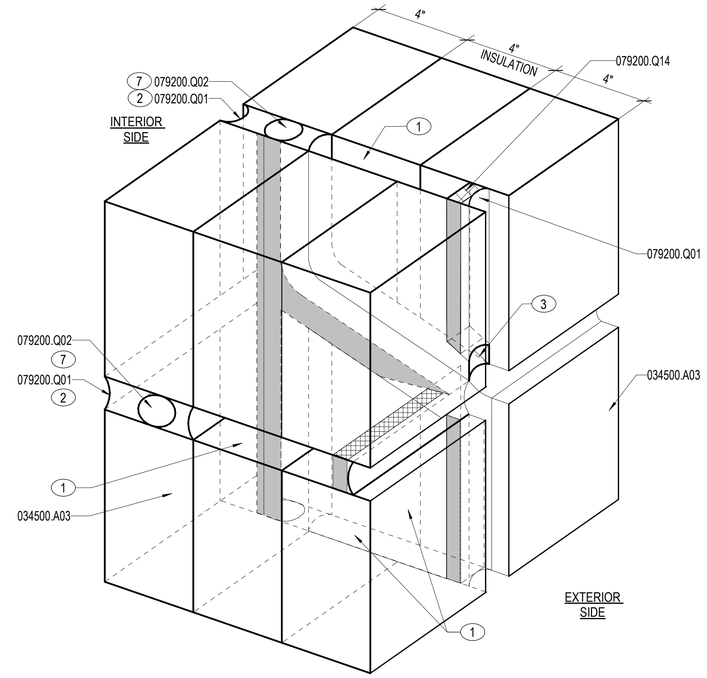

C3 TWO-STAGE JOINT SYSTEM
3" = 1'-0"

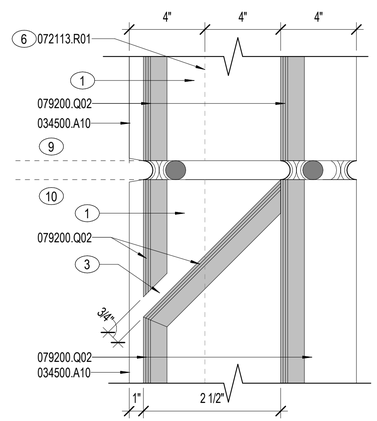

A2 DOUBLE SEALANT AT MID-JOINT - TYP
3" = 1'-0"

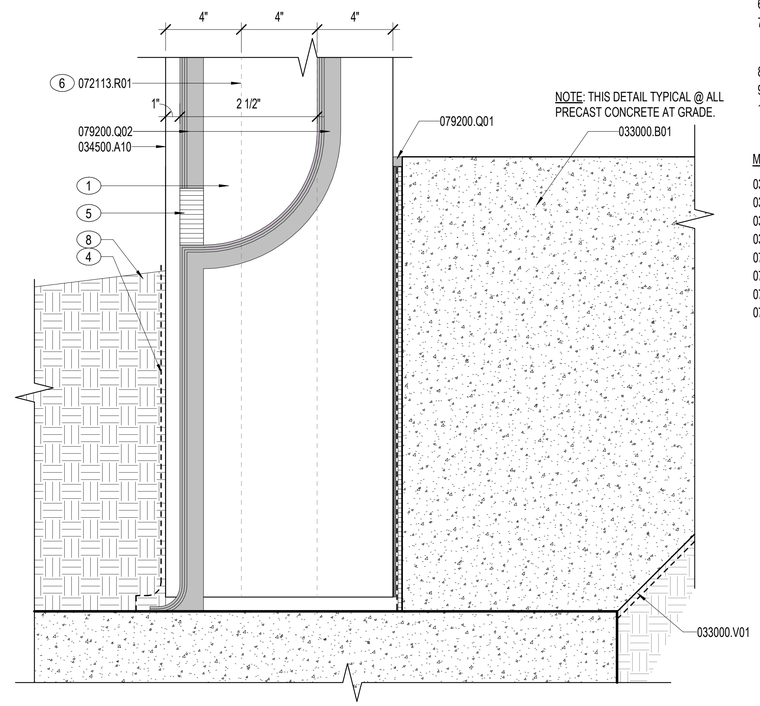

A3 DOUBLE SEALANT AT GRADE - TYP
3" = 1'-0"

NOTES:

SHEET NOTES:

A REFER TO SHEET OAE001 FOR GENERAL ABBREVIATIONS AND ARCHITECTURAL SYMBOLS.

B REFER TO SHEETS OAE201-OAE202 AND OAE221 FOR PANEL JOINT AND REVEAL TYPES AND LOCATIONS.

C REFER TO SHEETS OAE222-OAE226 FOR PRECAST PANEL ELEVATIONS.

D PRECAST JOINTS BETWEEN PANELS ARE BASED ON THE TWO-STAGE JOINT SYSTEM. PRECAST JOINTS BETWEEN PANELS TO BE 1". PRECAST PANEL REVEALS ARE BASED ON A 3/4" REVEAL. PRECAST PANEL REVEALS DIMENSIONED TO THE TOP OF REVEAL, UNO.

KEY NOTES (00)

1 DRAINAGE SPACE.
2 PROVIDE SEALANT BEAD ON INTERIOR SIDE OF PRECAST PANEL WHEN INTERIOR FACE IS TO BE LEFT EXPOSED.
3 DRAINAGE OPENING. 1/2 MIN.
4 DAMP PROOFING.
5 WEEP.
6 LINE OF INSULATION LAYER BEYOND
7 WHEN BACK SIDE OF PRECAST PANEL IS EXPOSED TO THE EXTERIOR AT TOP OF PARAPETS, REVERSE BACKER ROD & SEALANT SUCH THAT SEALANT IS ALWAYS TO THE EXTERIOR SIDE OF PRECAST PANEL.
8 LINE OF GRADE.
9 TOP OF REVEAL.
10 BOTTOM OF REVEAL.

MATERIAL NOTES

033000.B01	CONCRETE SLAB
033000.V01	VAPOR RETARDER
034500.A03	PRECAST CONCRETE WALL PANEL
034500.A10	PRECAST CONCRETE INSULATED WALL PANEL
072113.R01	BOARD INSULATION
079200.Q01	JOINT SEALANT
079200.Q02	BACKSTOP AND SEALANT
079200.Q14	PREFORMED FOAM JOINT FILLER

0 1" 5" 10" 15"
3" = 1'-0" GRAPHIC SCALE

NOTE:
IF THIS DRAWING IS LESS THAN 34" X 22"
IT IS A REDUCED SIZE DRAWING

SYM	DESCRIPTION	DATE	APPR
1	MOD P00005	05/2023	
2	MOD P00006 AND MOD P00007	10/2025	

NAVFAC

STATE OF FLORIDA
BILLY KEITH HOLLOWAY
AR93022
REGISTERED ARCHITECT
SEAL

BAMFORTH
ARCHITECTURE ENGINEERING

AE INFO

APPROVED
FOR COMMANDER NAVFAC 11/21/2025
ACTIVITY
Approved by: J. Scott Roberts, Asset Management Branch Head & Supervisory Facility Planner, PWD Beaufort, SC via email.
SATISFACTORY TO DATE 12/15/2022
DES EAD DRW MEC CHK BKH
PM/DM KTB / RLH
BRANCH MANAGER CGM
CHIEF ENG/ARCH EJA
FP ENGINEER DSN

DEPARTMENT OF THE NAVY
NAVAL FACILITIES ENGINEERING SYSTEMS COMMAND
DC CODE:
NAVAL FACILITIES ENGINEERING SYSTEMS COMMAND – MID-ATLANTIC
NORFOLK, VA
MCAS BEAUFORT
BEAUFORT, SC
P-475 AIRCRAFT MAINTENANCE HANGAR - VOLUME 3 (OSF OPTION)
TYPICAL PRECAST CONCRETE DETAILS - TWO-STAGE JOINT SYSTEM

SCALE: 3" = 1'-0"
EPROJECT NO.: 1363603
CONSTR. CONTR. NO.
NAVFAC DRAWING NO. 12860157
SHEET 956 OF 1412
OAE531

DRAWFORM REVISION: 25 AUGUST 2020

Autodesk Docs://20043 MIFA1 502 F35 Maintenance Hangar/20043 F35 Maint Hangar_OSF Shop Annex.rvt
11/3/2025 9:10:20 PM

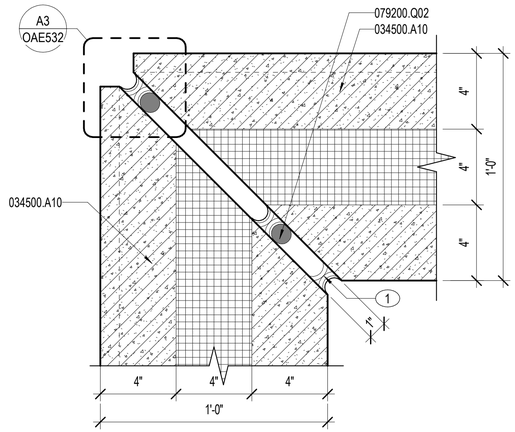

C2 CORNER JOINT - MITER - TYP

3" = 1'-0"

OAE221, OAE501

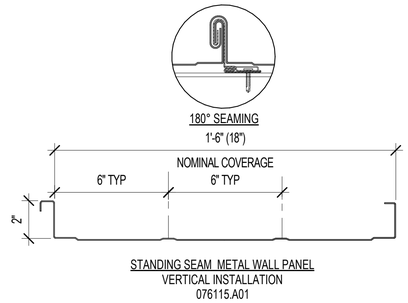

D3 METAL WALL PANEL PROFILES

3" = 1'-0"

NOTES:

SHEET NOTES:

A REFER TO SHEET OAE001 FOR GENERAL ABBREVIATIONS AND ARCHITECTURAL SYMBOLS.

B REFER TO SHEETS OAE201-OAE202 AND OAE221 FOR PANEL JOINT AND REVEAL TYPES AND LOCATIONS.

C REFER TO SHEETS OAE222-OAE226 FOR PRECAST PANEL ELEVATIONS.

D PRECAST JOINTS BETWEEN PANELS ARE BASED ON THE TWO-STAGE JOINT SYSTEM. PRECAST JOINTS BETWEEN PANELS TO BE 1". PRECAST PANEL REVEALS ARE BASED ON A 3/4" REVEAL. PRECAST PANEL REVEALS DIMENSIONED TO THE TOP OF REVEAL, UNO.

KEY NOTES (00)

1 PROVIDE SEALANT BEAD ON INTERIOR SIDE OF PRECAST PANEL WHEN INTERIOR FACE IS TO BE LEFT EXPOSED.

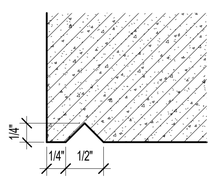

B1 DRIP EDGE - TYP

12" = 1'-0"

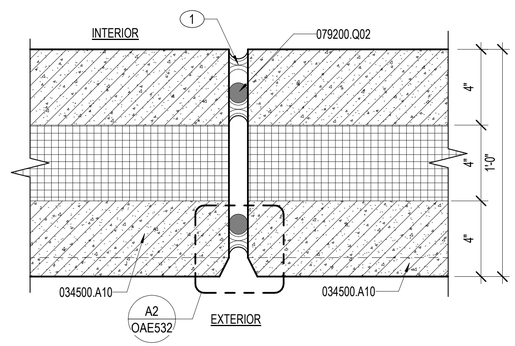

B2 PANEL JOINT - CHAMFER - TYP

3" = 1'-0"

OAE101A, OAE101B, OAE221, OAE501

MATERIAL NOTES

034500.A10	PRECAST CONCRETE INSULATED WALL PANEL
076115.A01	STANDING-SEAM METAL ROOF PANEL
079200.Q02	BACKSTOP AND SEALANT

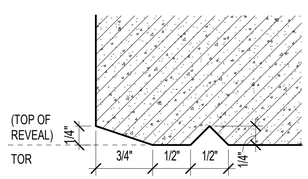

A1 DRIP EDGE - TYP

12" = 1'-0"

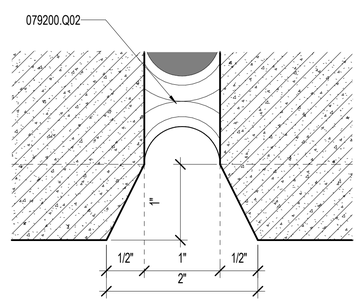

A2 PANEL JOINT - CHAMFER - TYP

12" = 1'-0"

OAE501, OAE502, OAE532

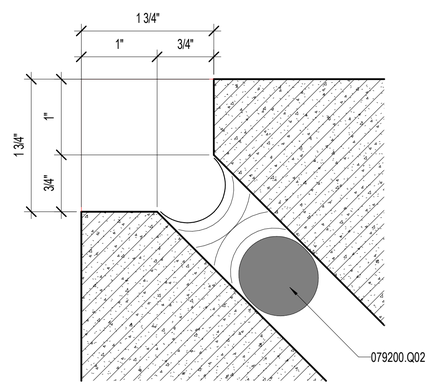

A3 MITER - TYP

12" = 1'-0"

OAE502, OAE532

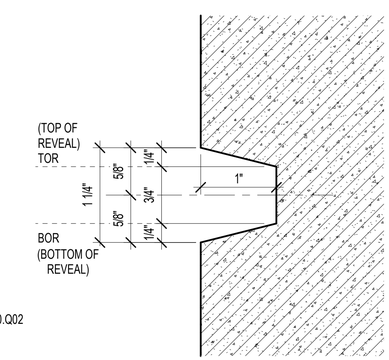

A4 REVEAL - TYP

12" = 1'-0"

0 ½" 1" 2" 3" 4"
1'-0" = 1'-0" GRAPHIC SCALE

0 1" 5" 10" 15"
3" = 1'-0" GRAPHIC SCALE

NOTE:
IF THIS DRAWING IS LESS THAN 34" X 22"
IT IS A REDUCED SIZE DRAWING

STM	DESCRIPTION	DATE	APPR
1	MOD P00005	05/2023	
2	MOD P00006 AND MOD P00007	10/2025	

NAVFAC

STATE OF FLORIDA
BILLY KEITH HOLLOWAY
AR93022
REGISTERED ARCHITECT
SEAL

BAMFORTH
CONSULTING ARCHITECTS

AE INFO

APPROVED
FOR COMMANDER NAVFAC 11/21/2025
ACTIVITY Approved by J. Scott Roberts, Asset Management Branch Head & Supervisory Facility Planner, PWD Beaufort, SC via email.
SATISFACTORY TO DATE 12/15/2022
DES EAD DRW MEC CHK BKH
PMDM KTB / RLH
BRANCH MANAGER
CHIEF ENG/ARCH EJA
FP ENGINEER DSN

NAVAL FACILITIES ENGINEERING SYSTEMS COMMAND
DEPARTMENT OF THE NAVY
NAVAL FACILITIES ENGINEERING SYSTEMS COMMAND ~ MID-ATLANTIC
NORFOLK, VA
DC CODE
MCAS BEAUFORT
BEAUFORT, SC
P-475 AIRCRAFT MAINTENANCE HANGAR - VOLUME 3 (OSF OPTION)
TYPICAL PRECAST CONCRETE AND METAL WALL PANEL DETAILS

SCALE: As indicated
EPROJECT NO.: 1363603
CONSTR. CONTR. NO.
NAVFAC DRAWING NO. 12860158
SHEET 957 OF 1412
OAE532

DRAWFORM REVISION: 28 AUGUST 2020

Autodesk Docs://2042 MEAT 502 F35 Maintenance Hangar/2042 F35 Maint Hangar_OSF Shop Annex.rvt
11/3/2025 9:10:22 PM

NOTES:

SHEET NOTES:

A REFER TO SHEETS OAE001 FOR GENERAL ABBREVIATIONS AND ARCHITECTURAL SYMBOLS.

B REFER TO STRUCTURAL DRAWINGS FOR TOP OF STEEL HEIGHTS.

C REFER TO SHEETS OAE531-OAE532 FOR TYPICAL PRECAST JOINT SEALANT, REVEAL/JOINT DIMENSIONS, SEALANT WEEP DETAILS. REFER TO SHEET OAE532 FOR TYPICAL METAL WALL PANEL DETAILS.

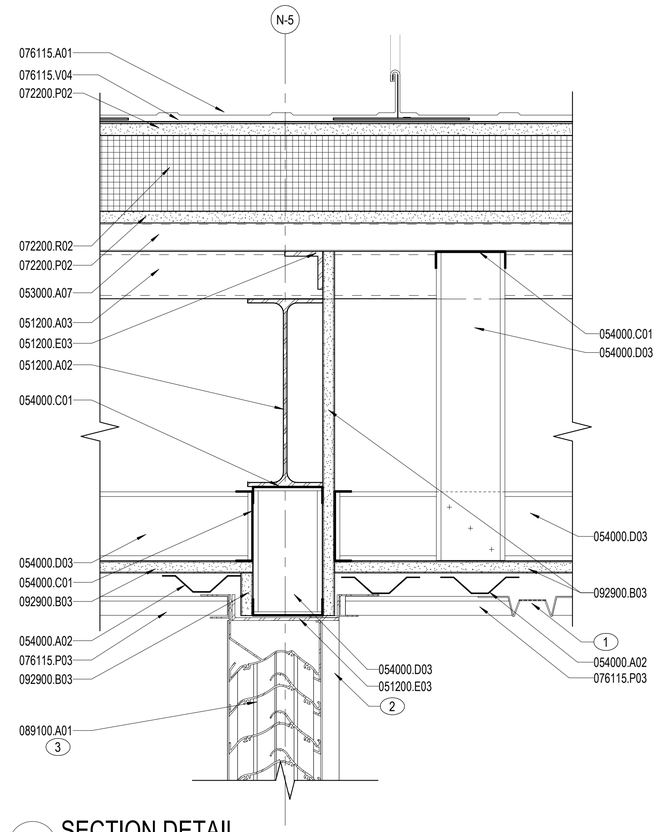

B3 SECTION DETAIL
3" = 1'-0"
OAE523, OAE601

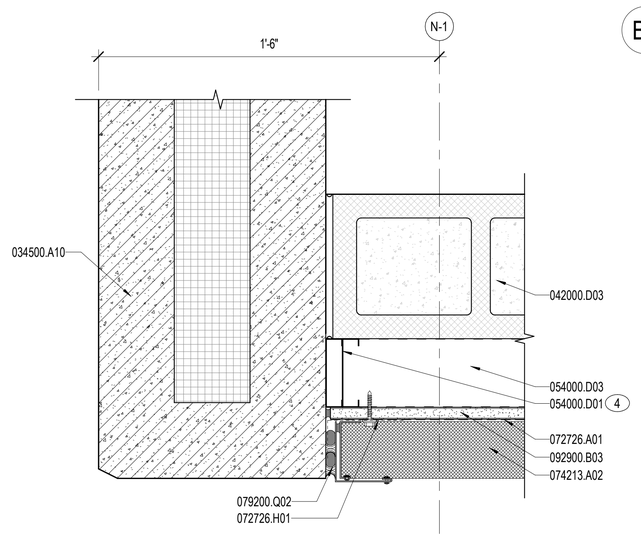

A2 PLAN DETAIL
3" = 1'-0"
OAE501

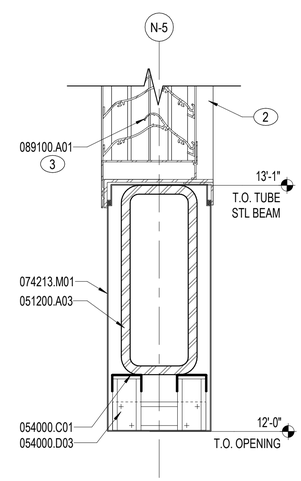

A3 SECTION DETAIL
3" = 1'-0"
OAE523, OAE601

KEY NOTES (00)

1 SOFFIT VENT 2" WIDE ALONG EXTENT OF NON-INSULATED EXTERIOR WALL SOFFIT AREAS.

2 ALUMINUM SLEEVE - BY LOUVER MFR.

3 LOUVER PROFILES ARE GENERIC. REFER TO SPECIFICATION SECTION 08 91 00 FOR PERFORMANCE REQUIREMENTS.

4 DOUBLE METAL STUDS.

MATERIAL NOTES

034500.A10	PRECAST CONCRETE INSULATED WALL PANEL
042000.D03	CMU 8"
051200.A02	STEEL WIDE FLANGE BEAM
051200.A03	STEEL TUBE BEAM
051200.E03	STEEL PLATE, BENT
053000.A07	STEEL ROOF DECK
054000.A02	METAL CHANNEL
054000.C01	METAL STUD RUNNER TRACK
054000.D01	METAL STUD
054000.D03	METAL STUD 3 5/8"
072200.P02	GLASS MAT GYPSUM PROTECTION BOARD
072200.R02	ROOF INSULATION BOARD
072726.A01	FLUID-APPLIED AIR BARRIER, VAPOR-RETARDING
072726.H01	MEMBRANE FLASHING STRIP
074213.A02	INSULATED METAL WALL PANEL SYSTEM
074213.M01	METAL TRIM
076115.A01	STANDING-SEAM METAL ROOF PANEL
076115.P03	METAL SOFFIT PANEL SYSTEM
076115.V04	HIGH TEMPERATURE RESISTANT UNDERLAYMENT
079200.Q02	BACKSTOP AND SEALANT
089100.A01	EXTRUDED ALUMINUM WALL LOUVER
092900.B03	GLASS MAT FACED EXTERIOR GYPSUM SHEATHING 5/8"

0 1" 5" 10" 15"
3" = 1'-0" GRAPHIC SCALE

NOTE:
IF THIS DRAWING IS LESS THAN 34" X 22"
IT IS A REDUCED SIZE DRAWING

SYM	DESCRIPTION	DATE	APPR.
1	MOD P00005	05/2023	
2	MOD P00006 AND MOD P00007	10/2025	

STATE OF FLORIDA
BILLY KEITH HOLLOWAY
AR93022
REGISTERED ARCHITECT
SEAL

BAMFORTH
AE INFO

APPROVED
FOR COMMANDER NAVFAC 11/21/2025

ACTIVITY
Approved by J. Scott Roberts,
Asset Management Branch Head &
Supervisory Facility Planner, PWD
Beaufort, SC via email.

SATISFACTORY TO DATE 12/15/2022

DES	EAD	DRW MEC	CHK BKH
PM/DM	KTB / RLH		
BRANCH MANAGER	CGM		
CHIEF ENG/ARCH	EJA		
FP ENGINEER	DSN		

DEPARTMENT OF THE NAVY
NAVAL FACILITIES ENGINEERING SYSTEMS COMMAND
DC CODE:
NAVAL FACILITIES ENGINEERING SYSTEMS COMMAND – MID-ATLANTIC
NORFOLK, VA
MCAS BEAUFORT
BEAUFORT, SC
P-475 AIRCRAFT MAINTENANCE HANGAR - VOLUME 3 (OSF OPTION)
EXTERIOR DETAILS

SCALE: 3" = 1'-0"
EPROJECT NO.: 1363603
CONSTR. CONTR. NO.
NAVFAC DRAWING NO. 12860159
SHEET 958 OF 1412

OAE533

DRAWFORM REVISION: 25 AUGUST 2020

Autodesk Docs://20042 MRAF 502 F35 Maintenance Hangar/20042 F35 Maint Hangar_OSF Shop Annex.rvt
11/3/2025 9:10:26 PM

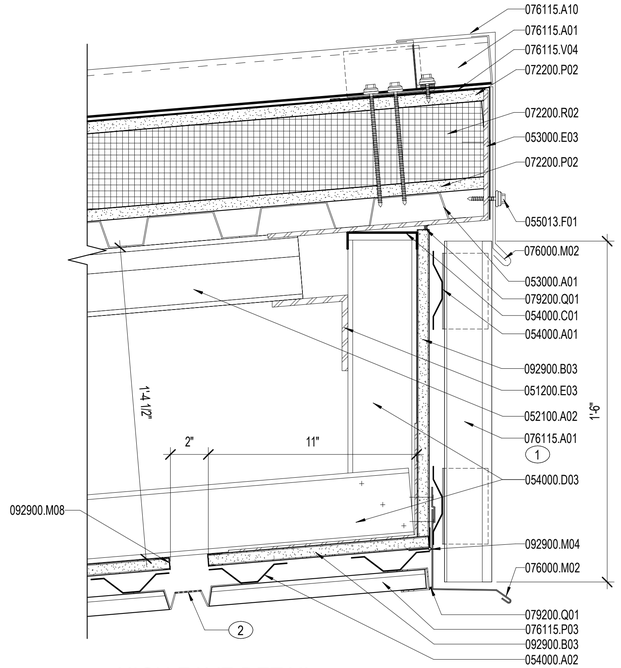

C1 HIGH EAVE DETAIL

3" = 1'-0" OAE522

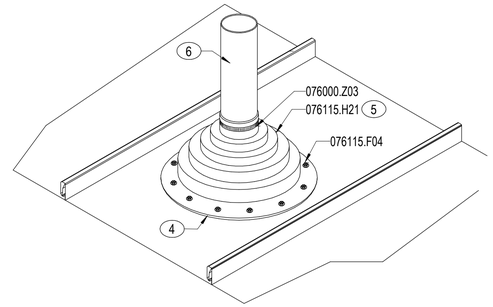

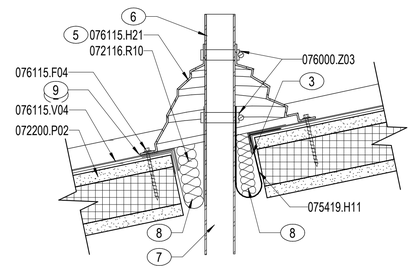

C3 SMALL PIPE PENETRATION

3" = 1'-0" OAE101, OAE101B, OAE201, OAE202, OAE301

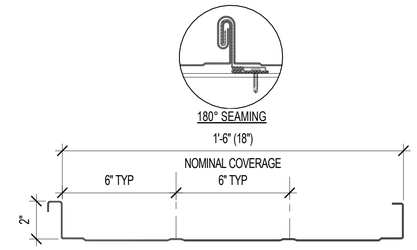

D4 ROOF PANEL PROFILE

3" = 1'-0"

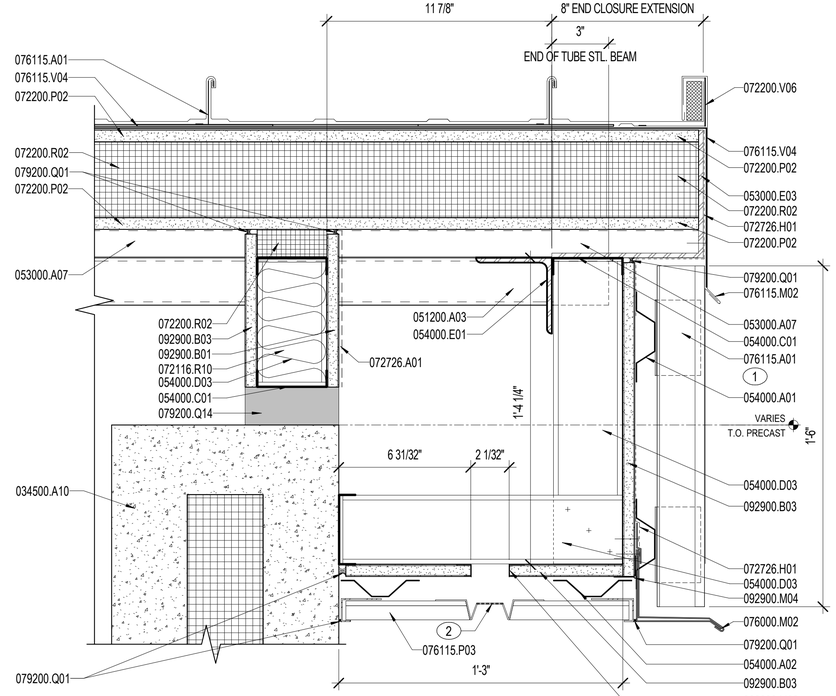

A2 RAKE DETAIL

3" = 1'-0" OAE521, OAE523

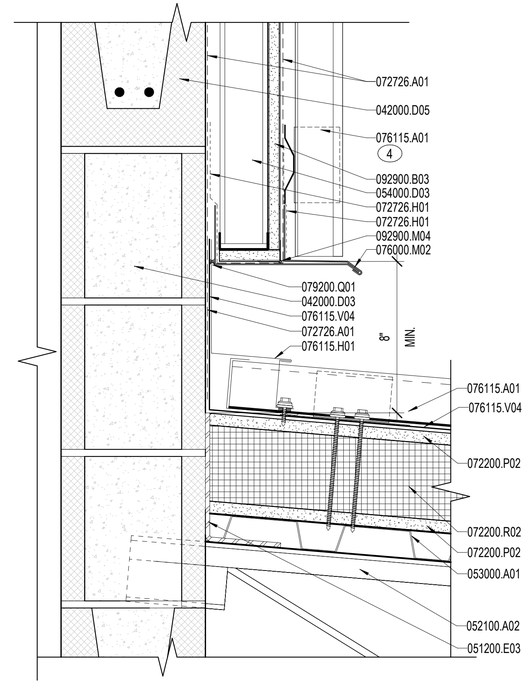

A3 WALL TO ROOF HIGH EAVE DETAIL

3" = 1'-0" OAE522

NOTES:

SHEET NOTES:

A REFER TO SHEET OAE001 FOR GENERAL ABBREVIATIONS AND ARCHITECTURAL SYMBOLS.

B R-VALUE FOR ALL ROOF INSULATION IS TO BE EQUAL TO R-25 MINIMUM CONTINUOUS. INSULATION FOR DESIGN PURPOSES IS BASED ON 1" POLYISOCYANURATE INSULATION = R-6.

C SLOPED ROOFING COMPOSITION IS AN ALUMINUM STANDING SEAM METAL ROOFING PANEL ON 5/8" GLASS MAT COVER BOARD OVER 4" POLYISOCYANURATE RIGID BOARD INSULATION ON METAL DECK. REFER TO SPECIFICATION SECTION 07 61 15. REFER TO STRUCTURAL DRAWINGS FOR DECK INFOR

D REFER TO STRUCTURAL DRAWINGS FOR TOP OF STEEL HEIGHTS.

E ARCHITECTURAL EXTERIOR DIMENSIONS ARE TO EXTERIOR FACE OF INSULATED PRECAST PANEL AND FACE OF METAL STUD, UNO.

KEY NOTES (00)

1 STANDING SEAM METAL PANEL, VERTICAL INSTALLATION.
2 SOFFIT VENT 2" WIDE ALONG EXTENT OF NON-INSULATED EXTERIOR WALL SOFFIT AREAS.
3 TURN EDGE OF HOLE IN PAN TO STIFFEN
4 SET SECUREMENT RING IN CONTINUOUS BEAD OF SEALANT.
5 SECURE FLASHING COLLAR FLANGE TO ROOF PANEL AND NOT TO METAL BEAD OF DECK.
6 EQUIPMENT SUPPORT STAND OR VENT THRU ROOF.
7 CONTINUES TO STRUCTURE BELOW.
8 MEMBRANE ENVELOPE TO CONTAIN BATT INSULATION.
9 SET IN CONTINUOUS SEALANT BED PER MANUFACTURERS INSTRUCTIONS.

MATERIAL NOTES

034500.A10	PRECAST CONCRETE INSULATED WALL PANEL
042000.D03	CMU 8"
042000.D05	CMU BOND BEAM
051200.A03	STEEL TUBE BEAM
051200.E03	STEEL PLATE, BENT
052100.A02	OPEN WEB STEEL JOIST
053000.A01	STEEL DECK
053000.A07	STEEL ROOF DECK
053000.E03	END CLOSURE
054000.A01	METAL FRAMING
054000.A02	METAL CHANNEL
054000.C01	METAL STUD RUNNER TRACK
054000.D03	METAL STUD 3 5/8"
054000.E01	METAL CLIP ANGLE
055013.F01	STEEL FASTENER
072116.R10	BLANKET INSULATION, UNFACED
072200.P02	GLASS MAT GYPSUM PROTECTION BOARD
072200.R02	ROOF INSULATION BOARD
072200.V06	VAPOR RETARDER
072726.A01	FLUID-APPLIED AIR BARRIER, VAPOR-RETARDING
072726.H01	MEMBRANE FLASHING STRIP
075419.H11	POLYVINYL-CHLORIDE (PVC) BASE FLASHING
076000.M02	DRIP EDGE
076000.Z03	DRAW BAND
076115.A01	STANDING-SEAM METAL ROOF PANEL
076115.A10	RIDGE CAP
076115.F04	FASTENER WITH NEOPRENE WASHER
076115.H01	METAL FLASHING
076115.H21	ROOF PENETRATION FLASHING
076115.M02	DRIP EDGE
076115.P03	METAL SOFFIT PANEL SYSTEM
076115.V04	HIGH TEMPERATURE RESISTANT UNDERLAYMENT
079200.Q01	JOINT SEALANT
079200.Q14	PREFORMED FOAM JOINT FILLER
092900.B01	GYPSUM BOARD, GLASS MAT FACED 5/8"
092900.B03	GLASS MAT FACED EXTERIOR GYPSUM SHEATHING 5/8"
092900.M04	CORNERBEAD
092900.M08	CASING BEAD - "J"

0 1" 5" 10" 15"

3" = 1'-0" GRAPHIC SCALE

NOTE:
IF THIS DRAWING IS LESS THAN 34" X 22"
IT IS A REDUCED SIZE DRAWING

SYM	DESCRIPTION	DATE	APPR
1	MOD P00005	05/2023	
2	MOD P00006 AND MOD P00007	10/2025	

NAVFAC

STATE OF FLORIDA
BILLY KEITH HOLLOWAY
AR93022
REGISTERED ARCHITECT
SEAL

BAMFORTH

AE INFO

APPROVED
FOR COMMANDER NAVFAC 11/21/2025

ACTIVITY: Approved by J. Scott Roberts, Asset Management Branch Head & Supervisory Facility Planner, PWD Beaufort, SC via email.

SATISFACTORY TO DATE	12/15/2022
DES EAD	DRW KJF / CHK BKH
PMDM	KTB / RLH
BRANCH MANAGER	CGM
CHIEF ENG/ARCH	EJA
FP ENGINEER	DSN

DEPARTMENT OF THE NAVY
NAVAL FACILITIES ENGINEERING SYSTEMS COMMAND
DC CORE
NAVAL FACILITIES ENGINEERING SYSTEMS COMMAND - MID-ATLANTIC NORFOLK, VA
MCAS BEAUFORT
BEAUFORT, SC
P-475 AIRCRAFT MAINTENANCE HANGAR - VOLUME 3 (OSF OPTION)
ROOF DETAILS - STANDING SEAM

SCALE: 3" = 1'-0"
EPROJECT NO.: 1363603
CONSTR. CONTR. NO.
NAVFAC DRAWING NO. 12860160
SHEET 959 OF 1412

OAE541

DRAWFORM REVISION: 25 AUGUST 2020

Autodesk Docs://20042 MFA F 503 F35 Maintenance Hangar/20042 F 35 Maint Hangar_OSF Shop Annex.rvt
11/3/2025 9:10:30 PM

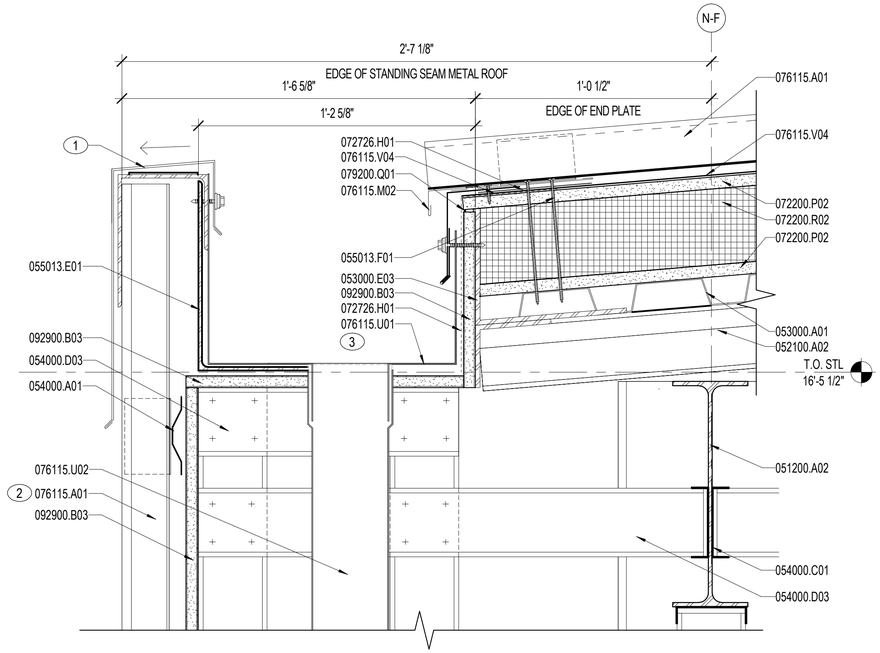

C3 EAVE / CONCEALED GUTTER DETAIL

3" = 1'-0"

OAE522

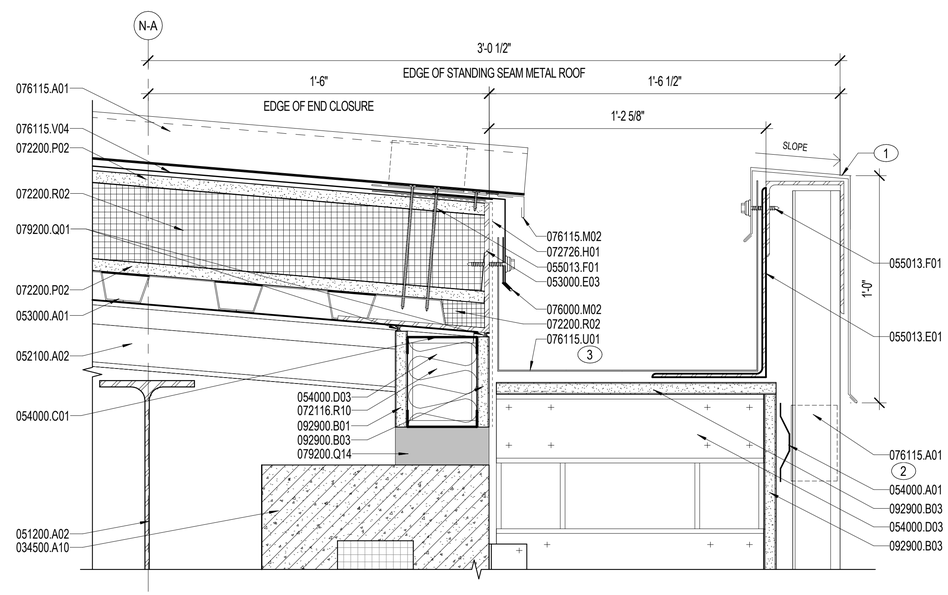

A2 EAVE / CONCEALED GUTTER DETAIL

3" = 1'-0"

OAE523

NOTES:

SHEET NOTES:

A REFER TO SHEET OAE001 FOR GENERAL ABBREVIATIONS AND ARCHITECTURAL SYMBOLS.

B R-VALUE FOR ALL ROOF INSULATION IS TO BE EQUAL TO R-25 MINIMUM CONTINUOUS. INSULATION FOR DESIGN PURPOSES IS BASED ON 1" POLYISOCYANURATE INSULATION = R-6.

C SLOPED ROOFING COMPOSITION IS AN ALUMINUM STANDING SEAM METAL ROOFING PANEL ON 5/8" GLASS MAT COVER BOARD OVER 4" POLYISOCYANURATE RIGID BOARD INSULATION ON METAL DECK. REFER TO SPECIFICATION SECTION 07 61 15. REFER TO STRUCTURAL DRAWINGS FOR DECK INFOR

D REFER TO STRUCTURAL DRAWINGS FOR TOP OF STEEL HEIGHTS.

E ARCHITECTURAL EXTERIOR DIMENSIONS ARE TO EXTERIOR FACE OF INSULATED PRECAST PANEL AND FACE OF METAL STUD, UNO.

KEY NOTES (00)

1 METAL CAP AND DRIP - COLOR TO MATCH STANDING SEAM METAL ROOF.

2 STANDING SEAM METAL PANEL, VERTICAL INSTALLATION.

3 GUTTER SIZE 10" DEPTH x 13" WIDE

MATERIAL NOTES

034500.A10	PRECAST CONCRETE INSULATED WALL PANEL
051200.A02	STEEL WIDE FLANGE BEAM
052100.A02	OPEN WEB STEEL JOIST
053000.A01	STEEL DECK
053000.E03	END CLOSURE
054000.A01	METAL FRAMING
054000.C01	METAL STUD RUNNER TRACK
054000.D03	METAL STUD 3 5/8"
055013.E01	STEEL ANGLE
055013.F01	STEEL FASTENER
072116.R10	BLANKET INSULATION, UNFACED
072200.P02	GLASS MAT GYPSUM PROTECTION BOARD
072200.R02	ROOF INSULATION BOARD
072726.H01	MEMBRANE FLASHING STRIP
076000.M02	DRIP EDGE
076115.A01	STANDING-SEAM METAL ROOF PANEL
076115.M02	DRIP EDGE
076115.U01	GUTTER
076115.U02	DOWNSPOUT
076115.V04	HIGH TEMPERATURE RESISTANT UNDERLAYMENT
079200.Q01	JOINT SEALANT
079200.Q14	PREFORMED FOAM JOINT FILLER
092900.B01	GYPSUM BOARD, GLASS MAT FACED 5/8"
092900.B03	GLASS MAT FACED EXTERIOR GYPSUM SHEATHING 5/8"

0 1" 5" 10" 15"

3" = 1'-0" GRAPHIC SCALE

NOTE:
IF THIS DRAWING IS LESS THAN 34" X 22"
IT IS A REDUCED SIZE DRAWING

SYM	DESCRIPTION	DATE	APPR
1	MOD P00005	05/2023	
2	MOD P00006 AND MOD P00007	10/2025	

NAVFAC

STATE OF FLORIDA
BILLY KEITH HOLLOWAY
AR93022
11/21/25
REGISTERED ARCHITECT
SEAL

BAMFORTH
CONSULTING ARCHITECTS ENGINEERS

AE INFO

APPROVED
FOR COMMANDER NAVFAC 11/21/2025

ACTIVITY: Approved by J. Scott Roberts, Asset Management Branch Head & Supervisory Facility Planner, PWD Beaufort, SC via email.

SATISFACTORY TO DATE 12/15/2022

DES EAD	DRW MEC	CHK BKH	
PMDM		KTB / RLH	
BRANCH MANAGER		CGM	
CHIEF ENG/ARCH		EJA	
FP ENGINEER		DSN	

DEPARTMENT OF THE NAVY
DC CORE
NAVAL FACILITIES ENGINEERING SYSTEMS COMMAND
NAVAL FACILITIES ENGINEERING SYSTEMS COMMAND - MID-ATLANTIC
NORFOLK, VA
MCAS BEAUFORT
BEAUFORT, SC
P-475 AIRCRAFT MAINTENANCE HANGAR - VOLUME 3 (OSF OPTION)
ROOF DETAILS - STANDING SEAM

SCALE: 3" = 1'-0"
EPROJECT NO.: 1363603
CONSTR. CONTR. NO.
NAVFAC DRAWING NO. 12860161
SHEET 960 OF 1412

OAE542

DRAWFORM REV/BDN 25 AUGUST 2020

Autodesk Docs://20042 MFA F 503 F35 Maintenance Hangar/20042 F35 Maint Hangar - OSF Shop Annex.rvt
11/3/2025 9:10:34 PM

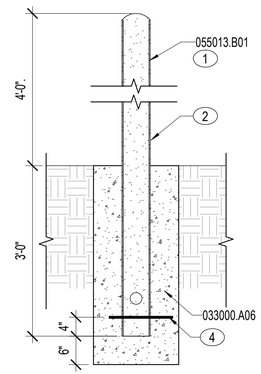

NOTE:
FINISH AFTER FABRICATION - HOT-DIP GALVANIZE

C3 BOLLARD DETAIL
3/4" = 1'-0" OAE101A, OAE201, OAE301 OAE312, OAE501

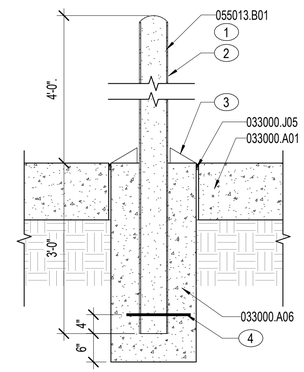

NOTE: FINISH AFTER FABRICATION : HOT-DIP GALVANIZE

C4 BOLLARD DETAIL
3/4" = 1'-0" OAE101A, OAE101B, OAE201 OAE301, OAE311, OAE312, OAE501

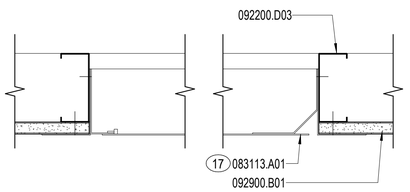

B2 CEILING ACCESS DOOR
3" = 1'-0" OAE111

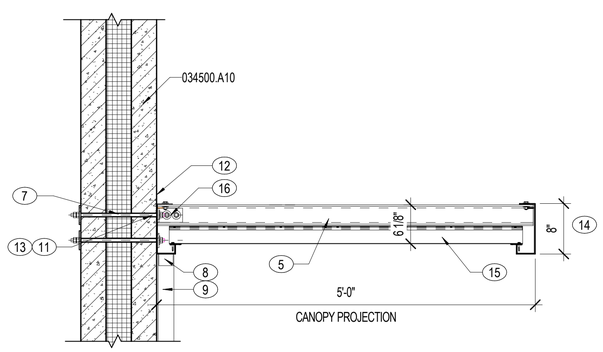

A1 ALUMINUM CANOPY SECTION
1" = 1'-0" OAE561

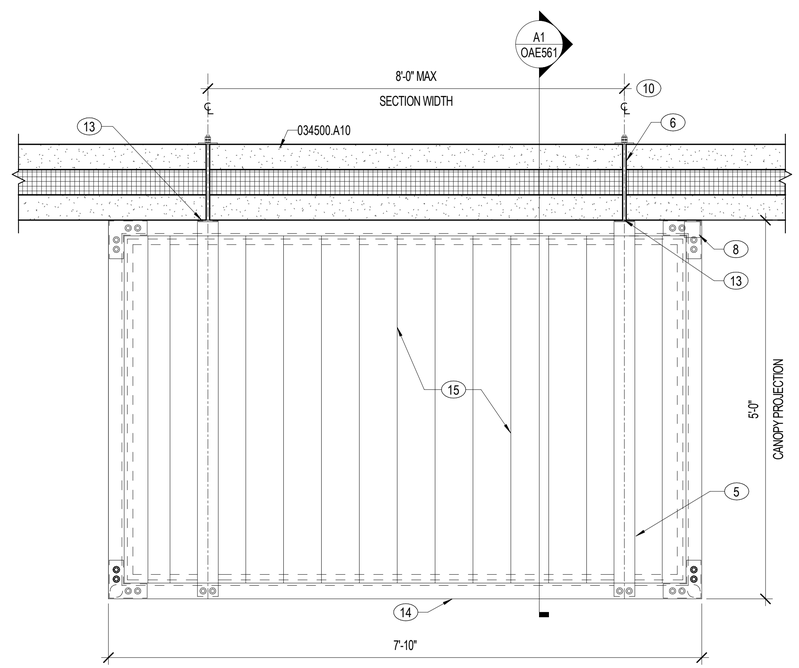

A3 ALUMINUM CANOPY PLAN
1" = 1'-0" OAE101B, OAE111, OAE202, OAE312

NOTES:

SHEET NOTES:

A REFER TO SHEET OAE001 FOR GENERAL ABBREVIATIONS AND ARCHITECTURAL SYMBOLS.

KEY NOTES (00)

1 6" DIA SCHEDULE 80 STEEL PIPE FILLED WITH CONCRETE
2 PART PIPE WITH 4" WIDE HORIZONTAL STRIPS-ALTERNATING BETWEEN "FLAT BLACK" AND "GLOSSY SAFETY YELLOW"
3 PROTECTIVE COVER.
4 TWO #6 X 1'-0" STEEL BARS THRU PIPE
5 EXTRUDED ALUMINUM CANOPY SUPPORT "I" BEAM.
6 5/8" THRU BOLT WITH WASHER AND NUTS.
7 1/2" EYEBOLT, WELDED (FIELD DRILLED) WITH WASHERS, NUTS, AND STEEL BACKING PLATE.
8 DRAIN STUB POSITIONED AND DRILLED ON SITE TO MEET SITE CONDITIONS.
9 2 1/2" X 3" DOWNSPOUT.
10 ELEVATIONS ARE BASED ON THE 6" MIN DISTANCE. ADJUST DISTANCE AS REQUIRED IN COORDINATION WITH THE PRECAST PANEL JOINTS.
11 1/2" THRU TREADED ROD, WELDED (FIELD DRILLED) WITH WASHERS, NUTS, AND STEEL BACKING PLATE.
12 FLASHING BY CANOPY MFR. (SEALANT BY INSTALLER).
13 SEAL ALL THROUGH-BOLT HOLES AIRTIGHT.
14 8" EXTRUDED ALUMINUM FASCIA, J-STYLE.
15 3" X 6" X .078" INTERLOCKING FLAT SOFFIT EXTRUDED ALUMINUM DECKING.
16 EXTRUDED ALUMINUM FRONT CLIP ANGEL HANGER ROD ATTACHMENT SUPPORT.
17 REFER TO SHEET OAE111 FOR ACCESS DOOR DIMENSIONS.

MATERIAL NOTES

033000.A01 CAST-IN-PLACE CONCRETE
033000.A06 CONCRETE FOOTING
033000.J05 PREFORMED JOINT FILLER
034500.A10 PRECAST CONCRETE INSULATED WALL PANEL
055013.B01 STEEL BOLLARD
083113.A01 ACCESS DOOR
092200.D03 METAL STUD 3 5/8"
092900.B01 GYPSUM BOARD, GLASS MAT FACED 5/8"

0 4" 1' 2' 3' 4' 5'
3/4" = 1'-0" GRAPHIC SCALE

0 6" 1' 2' 3' 4'
1" = 1'-0" GRAPHIC SCALE

NOTE:
IF THIS DRAWING IS LESS THAN 34" X 22"
IT IS A REDUCED SIZE DRAWING

SYM	DESCRIPTION	DATE	APPR
1	MOD P00005	05/2023	
2	MOD P00006 AND MOD P00007	10/2025	

NAVFAC

STATE OF FLORIDA
BILLY KEITH HOLLOWAY
AR93022
REGISTERED ARCHITECT
SEAL

BAMFORTH
ARCHITECTURE & ENGINEERING

AE INFO

APPROVED
FOR COMMANDER NAVFAC 11/21/2025

ACTIVITY Approved by J. Scott Roberts, Asset Management Branch Head & Supervisory Facility Planner, PWD Beaufort, SC via email.

SATISFACTORY TO DATE 12/15/2022

DES EAD	DRW MEC	CHK BKH	
PMDM	KTB / RLH		
BRANCH MANAGER	CGM		
CHIEF ENG/ARCH	EJA		
FP ENGINEER	DSN		

DEPARTMENT OF THE NAVY
NAVAL FACILITIES ENGINEERING SYSTEMS COMMAND
DC CORE
NAVAL FACILITIES ENGINEERING SYSTEMS COMMAND – MID-ATLANTIC NORFOLK, VA
MCAS BEAUFORT BEAUFORT, SC
P-475 AIRCRAFT MAINTENANCE HANGAR - VOLUME 3 (OSF OPTION)
MISCELLANEOUS DETAILS

SCALE: As indicated
EPROJECT NO.: 1363603
CONSTR. CONTR. NO.
NAVFAC DRAWING NO. 12860162
SHEET 961 OF 1412

OAE561

DRAWFORM REVISION: 25 AUGUST 2020

Autodesk Docs://20042-MFA1 503 733 Maintenance Hangar/20042-F 733 Maint Hangar_OSF Shop Annex.rvt
11/3/2025 9:10:37 PM

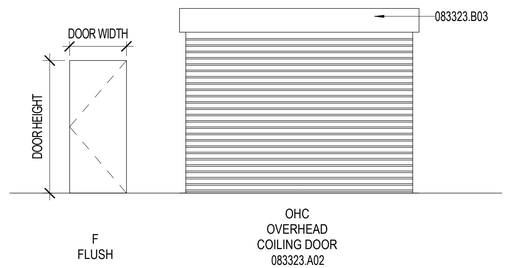

D1 DOOR TYPES
1/4" = 1'-0"

DOOR SCHEDULE - OSF / SHOP ANNEX

DR NO	DOOR						FRAME		RATING (MIN)	HDWR SET	DETAILS		RMK	ROOM STC
		WD	WD/ SEC	HT	MAT	TYPE	MAT	TYPE			HEAD	JAMB		
GROUND FLR														
O101		4'-0"		8'-0"	HM	F	HM	3	--	5.01	C4/OAE621	B4/OAE621	4, 5, 6, 7, 9	--
O102.1		4'-0"		8'-0"	HM	F	HM	3	--	5.01	C4/OAE621	B4/OAE621	4, 5, 6, 7, 9	--
O102.2		16'-8"		14'-0"	STL	OHC	STL	--	--	MFR	C2/OAE621	B2/OAE621	1	--
O102.3		4'-0"		8'-0"	HM	F	HM	3	--	5.01	C4/OAE621	B4/OAE621	4, 5, 6, 7, 9	--
O103		3'-0"		8'-0"	HM	F	HM	1	--	1.05C	B4/OAE622	A3/OAE622, A4/OAE622	3, 4, 5	--
O104		3'-0"		8'-0"	HM	F	HM	1	--	1.05C	B4/OAE622	A3/OAE622, A4/OAE622	3, 4, 5	--
O105		3'-0"		8'-0"	HM	F	HM	3	--	1.10	C4/OAE622	B4/OAE622	--	--
O106		3'-0"		8'-0"	HM	F	HM	3	--	1.25	C4/OAE622	B4/OAE622	2, 8	--
O107		3'-0"		8'-0"	HM	F	HM	3	--	7.04	C3/OAE622	B3/OAE622	5	STC 40
O108		4'-0"		8'-0"	HM	F	HM	3	--	5.01	C4/OAE621	B4/OAE621	4, 5, 6, 7, 9	--
O109	Pr	4'-0"		8'-0"	HM	F	HM	4	--	6.01	C4/OAE621	B4/OAE621	4, 5, 6, 7, 8, 9	--
O111.1		4'-0"		8'-0"	HM	F	HM	3	--	5.01	C4/OAE621	B4/OAE621	4, 5, 6, 7, 9	--
O111.2		16'-8"		14'-0"	STL	OHC	STL	--	--	MFR	C2/OAE621	B2/OAE621	1	--
O111.3		16'-8"		14'-0"	STL	OHC	STL	--	--	MFR	C2/OAE621	B2/OAE621	1	--
O111.4		4'-0"		8'-0"	HM	F	HM	3	--	5.01	C4/OAE621	B4/OAE621	4, 5, 6, 7, 9	--
O111.5		4'-0"		8'-0"	HM	F	HM	3	--	5.01	C4/OAE621	B4/OAE621	4, 5, 6, 7, 9	--
O111.6		4'-0"		8'-0"	HM	F	HM	3	--	5.01	C4/OAE621	B4/OAE621	4, 5, 6, 7, 9	--

NOTES:

SHEET NOTES:

A REFER TO SHEET OAE001 FOR GENERAL ABBREVIATIONS AND ARCHITECTURAL SYMBOLS.
B DOOR HARDWARE SETS ARE SPECIFIED IN SPECIFICATION SECTION 08 71 00.
C REFER TO SHEET OAE801 FOR PARTITION TYPES.
D PROVIDE DRIP STRIP AT ALL EXTERIOR DOORS NOT PROTECTED FROM THE WEATHER.
E DOOR DIMENSIONS ARE NOMINAL. ROUGH OPENING SIZES TO BE COORDINATED.
F DOOR FRAME PROFILES ARE GENERIC. REFER TO SPECIFICATION SECTION 08 11 13 FOR PERFORMANCE REQUIREMENTS.
G LOUVER PROFILES ARE GENERIC. REFER TO SPECIFICATION SECTION 08 91 00 FOR PERFORMANCE REQUIREMENTS.
H TRANSLUCENT PANEL PROFILES ARE GENERIC. REFER TO SPECIFICATION SECTION 07 42 13 FOR PERFORMANCE REQUIREMENTS.
I REFER TO SHEET OAS402 FOR DECORATIVE METAL DOUBLE SWING GATE ELEVATION AND HARDWARE REQUIREMENTS.
J FIELD VERIFY ALL DIMENSIONS.

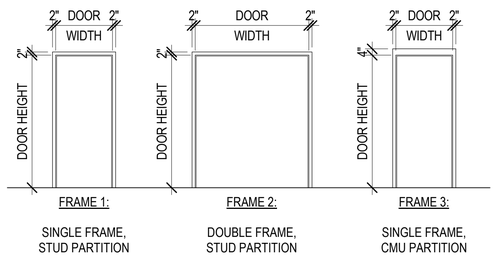

C1 FRAME TYPES
1/4" = 1'-0"

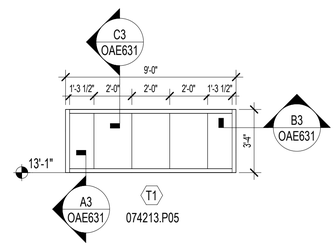

C3 TRANSLUCENT WINDOW ELEVATION
1/4" = 1'-0"

KEY NOTES (00)

DOOR REMARKS

1 MOTORIZED OVERHEAD COILING DOOR WITH AIR INFILTRATION SEALS. CONNECT TO FIRE ALARM SYSTEM. COORDINATE WITH FIRE ALARM DRAWINGS, OFA101 AND OFA501.
2 180 DEGREE DOOR SWING.
3 UNDERCUT DOOR.
4 SURFACE CLOSER.
5 PERIMETER DOOR GASKETING.
6 DOOR SWEEP.
7 RAIN GUARD.
8 OVERHEAD HOLDER.
9 EXIT DEVICE.

MATERIAL NOTES

074213.P05	TRANSLUCENT PANEL SYSTEM
083323.A02	INSULATED OVERHEAD COILING DOOR
083323.B03	COILING DOOR HOOD
089100.A01	EXTRUDED ALUMINUM WALL LOUVER

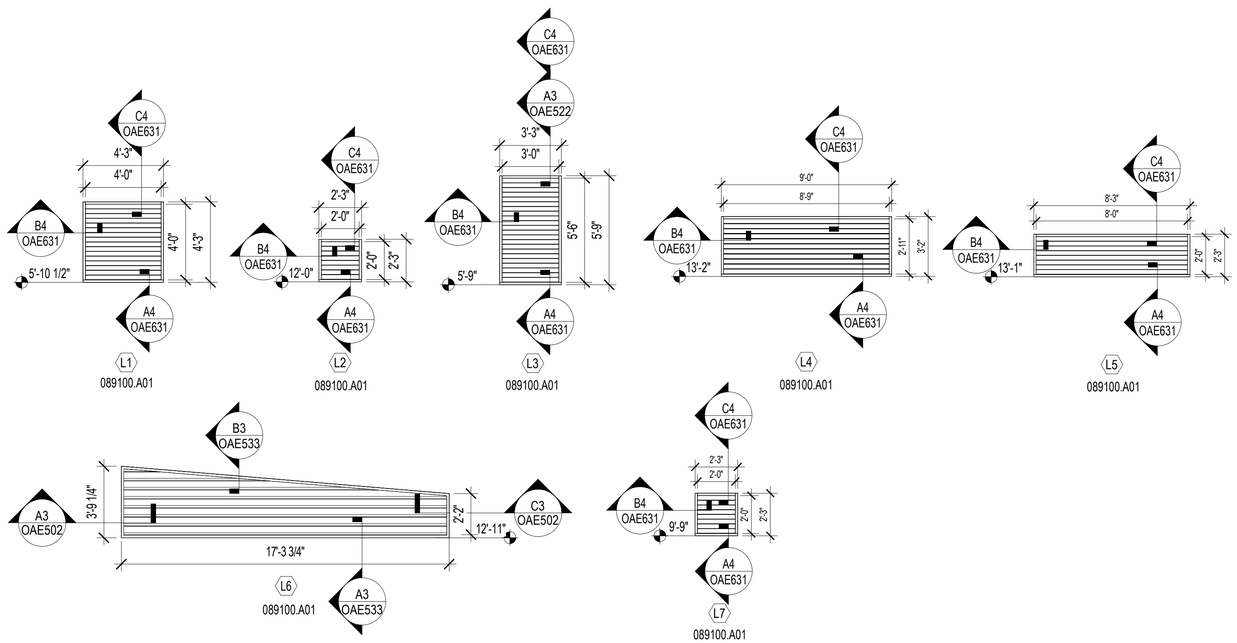

A1 LOUVER ELEVATIONS
1/4" = 1'-0"

0 1' 5' 10' 15'
1/4" = 1'-0" GRAPHIC SCALE

NOTE:
IF THIS DRAWING IS LESS THAN 34" X 22"
IT IS A REDUCED SIZE DRAWING

SYM	DESCRIPTION	DATE	APPR
1	MOD P00005	05/2023	
2	MOD P00006 AND MOD P00007	10/2025	

NAVFAC

STATE OF FLORIDA
BILLY KEITH HOLLOWAY
AR93022
REGISTERED ARCHITECT
SEAL

BAMFORTH
CONSULTING ARCHITECTS

AE INFO

APPROVED
FOR COMMANDER NAVFAC 11/21/2025
ACTIVITY Approved by J. Scott Roberts, Asset Management Branch Head & Supervisory Facility Planner, PWD Beaufort, SC via email.
SATISFACTORY TO DATE 12/15/2022
DES EAD DRW KJF CHK BKH
PM/DM KTB / RLH
BRANCH MANAGER CGM
CHIEF ENG/ARCH EJA
FP ENGINEER DSN

DEPARTMENT OF THE NAVY
NAVAL FACILITIES ENGINEERING SYSTEMS COMMAND
DC CORE
NAVAL FACILITIES ENGINEERING SYSTEMS COMMAND – MID-ATLANTIC NORFOLK, VA
MCAS BEAUFORT BEAUFORT, SC
P-475 AIRCRAFT MAINTENANCE HANGAR - VOLUME 3 (OSF OPTION)
DOOR SCHEDULE, DOOR/DOOR FRAME TYPES, LOUVER AND TRANSLUCENT PANEL ELEVATIONS

SCALE: 1/4" = 1'-0"
EPROJECT NO.: 1363603
CONSTR. CONTR. NO.
NAVFAC DRAWING NO. 12860163
SHEET 962 OF 1412

OAE601

DRAWFORM REVISION: 25 AUGUST 2020

Autodesk Docs://20042 MFA1 503 735 Maintenance Hangar/20042 F35 Maint Hangar_OSF Shop Annex.rvt
11/3/2025 9:10:41 PM

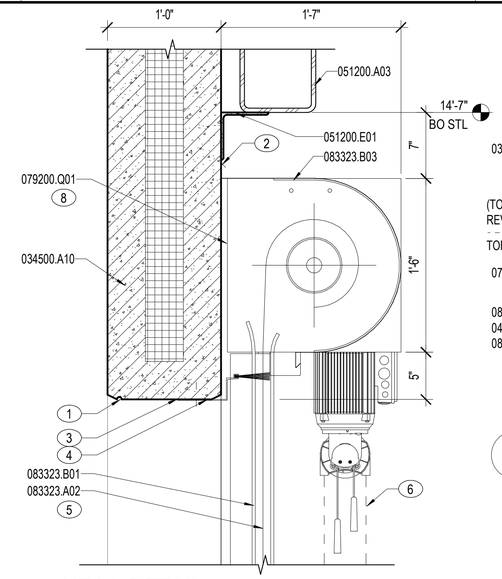

C2 HEAD DETAIL

1 1/2" = 1'-0" OAE601, OAE312

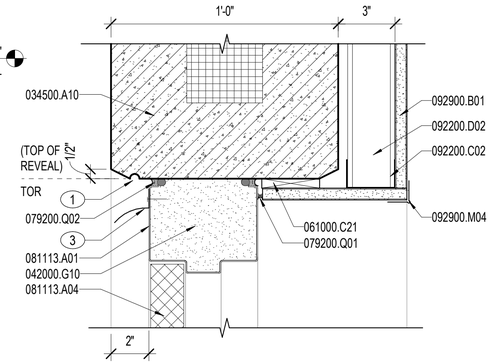

C3 HEAD DETAIL

3" = 1'-0" OAE601

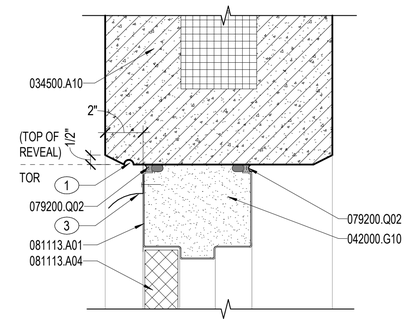

C4 HEAD DETAIL

3" = 1'-0" OAE601

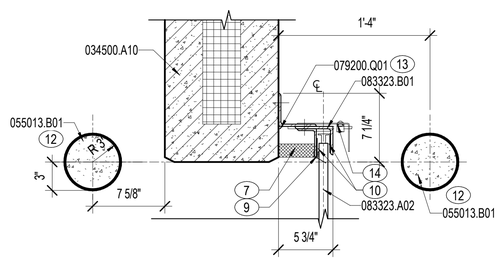

B2 JAMB DETAIL

1 1/2" = 1'-0" OAE101A, OAE101B, OAE601

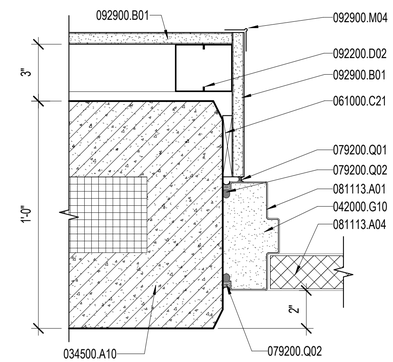

B3 JAMB DETAIL

3" = 1'-0" OAE601

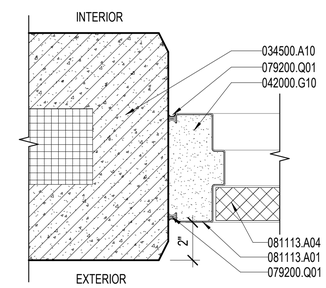

B4 JAMB DETAIL

3" = 1'-0" OAE601

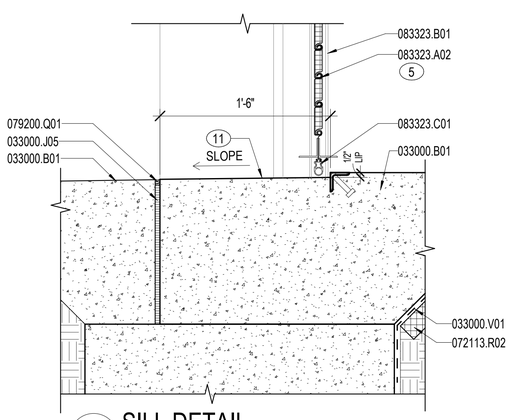

A2 SILL DETAIL

1 1/2" = 1'-0" OAE312

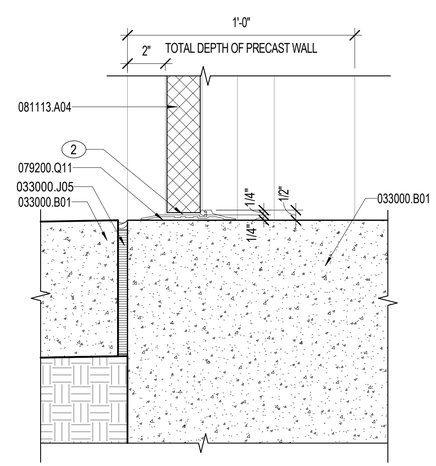

A4 SILL DETAIL

3" = 1'-0"

NOTES:

SHEET NOTES:

A REFER TO SHEET OAE001 FOR GENERAL ABBREVIATIONS AND ARCHITECTURAL SYMBOLS.
B DOOR HARDWARE SETS ARE SPECIFIED IN SPECIFICATION SECTION 08 71 00.
C REFER TO SHEET OAE601 FOR DOOR / FRAME TYPES.
D FIELD VERIFY ALL DIMENSIONS.
E DOOR DIMENSIONS ARE NOMINAL. ROUGH OPENING SIZES TO BE COORDINATED WITH PRECAST DIMENSIONS. TYPICAL.
F DOOR FRAME PROFILES ARE GENERIC. REFER TO SPECIFICATION SECTION 08 11 13 FOR PERFORMANCE REQUIREMENTS.
G PROVIDE DRIP STRIP AT ALL HOLLOW METAL EXTERIOR DOORS.

KEY NOTES (00)

1 PRECAST PANEL DRIP EDGE.
2 1-1/2" TOP HOOD BEAD.
3 1/8" MIN. SILICONE BEAD.
4 "Z"-TYPE LINTEL SEAL WITH 3/4" BRUSH.
5 22/24 GA INSULATED, FLAT SLATS. PROVIDE 15/16" THICK SLATS WITH 7/8" INSULATION WITHIN.
6 AUXILIARY HAND CHAIN.
7 COMPLETELY SEAL GUIDE AREA WITH A 1-1/2" FOAM STRIP. RUN FOAM STRIP FROM FLOOR TO UNDERSIDE OF LINTEL SEAL.
8 PROVIDE CONTINUOUS AIRTIGHT SEALANT AT JOINTS BETWEEN WALL AND DOOR JAMB GUIDES, WALL AND HOOD PERIMETER
9 VINYL WEATHER SEAL. RUN WEATHER SEAL FROM TOP TO BOTTOM OF GUIDE.
10 WEAR STRIPS, TYP.
11 LEVEL CONCRETE AT THE SLOPED OPENING TO MAINTAIN A PROPER SEAL AT THE DOOR BOTTOM WEATHERSEAL.
12 CONCRETE-FILLED STEEL BOLLARD, IMPACT-RATED. REFER TO DETAIL C4/OAE561.
13 PROVIDE CONTINUOUS AIRTIGHT SEALANT AT JOINTS BETWEEN WALL AND DOOR JAMB GUIDES, WALL AND HOOD PERIMETER
14 1/4" STEEL BRACKET PLATE ABOVE.

MATERIAL NOTES

033000.B01	CONCRETE SLAB
033000.J05	PREFORMED JOINT FILLER
033000.V01	VAPOR RETARDER
034500.A10	PRECAST CONCRETE INSULATED WALL PANEL
042000.G10	GROUT SOLID
051200.A03	STEEL TUBE BEAM
051200.E01	STEEL ANGLE
055013.B01	STEEL BOLLARD
061000.C21	FIRE RETARDANT WOOD BLOCKING
072113.R02	PERIMETER INSULATION
079200.Q01	JOINT SEALANT
079200.Q02	BACKSTOP AND SEALANT
079200.Q11	SEALANT BED
081113.A01	STEEL DOOR
081113.A04	STEEL DOOR, INSULATED
083323.A02	INSULATED OVERHEAD COILING DOOR
083323.B01	COILING DOOR GUIDES
083323.B03	COILING DOOR HOOD
083323.C01	BOTTOM BAR/WEATHER SEAL
092200.C02	METAL STUD RUNNER TRACK
092200.D02	METAL STUD 2 1/2"
092900.B01	GYPSUM BOARD, GLASS MAT FACED 5/8"
092900.M04	CORNERBEAD

0 6" 1' 2'
1½" = 1'-0" GRAPHIC SCALE

0 1" 5" 10" 15"
3" = 1'-0" GRAPHIC SCALE

NOTE:
IF THIS DRAWING IS LESS THAN 34" X 22"
IT IS A REDUCED SIZE DRAWING

SYM	DESCRIPTION	DATE	APPR
1	MOD P00005	05/2023	
2	MOD P00006 AND MOD P00007	10/2025	

NAVFAC

STATE OF FLORIDA
BILLY KEITH HOLLOWAY
AR93022
REGISTERED ARCHITECT
SEAL

BAMFORTH
ARCHITECTURE & ENGINEERING

AE INFO

APPROVED
FOR COMMANDER NAVFAC 11/21/2025

ACTIVITY
Approved by J. Scott Roberts,
Asset Management Branch Head &
Supervisory Facility Planner, PWD
Beaufort, SC via email.

SATISFACTORY TO DATE 12/15/2022

DES	EAD	DRW KJF	CHK BKH
PM/DM	KTB / RLH		
BRANCH MANAGER	CGM		
CHIEF ENG/ARCH	EJA		
FP ENGINEER	DSN		

DEPARTMENT OF THE NAVY
NAVAL FACILITIES ENGINEERING SYSTEMS COMMAND
DC CODE:
NAVAL FACILITIES ENGINEERING SYSTEMS COMMAND – MID-ATLANTIC
NORFOLK, VA
MCAS BEAUFORT
BEAUFORT, SC
P-475 AIRCRAFT MAINTENANCE HANGAR - VOLUME 3 (OSF OPTION)
EXTERIOR DOOR DETAILS

SCALE: As indicated
EPROJECT NO.: 1363603
CONSTR. CONTR. NO.
NAVFAC DRAWING NO. 12860164
SHEET 963 OF 1412

OAE621

DRAWFORM REVISION: 25 AUGUST 2020

Autodesk Docs://20042 MWAT 502 F35 Maintenance Hangar/20042 F35 Maint Hangar_OSF Shop Annex.rvt
11/3/2025 9:10:44 PM

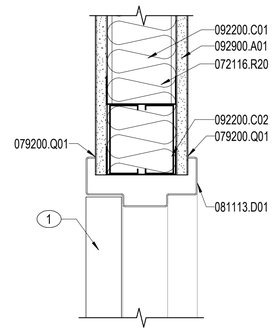

D2 HEAD DETAIL
3" = 1'-0" OAE601

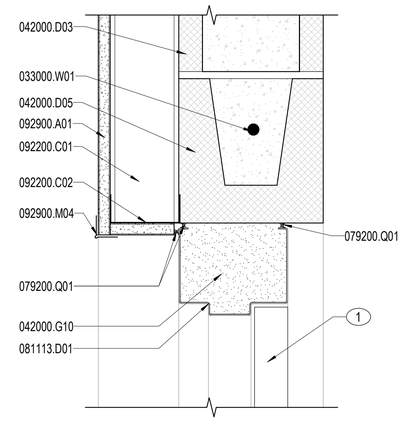

C3 HEAD DETAIL
3" = 1'-0" OAE601

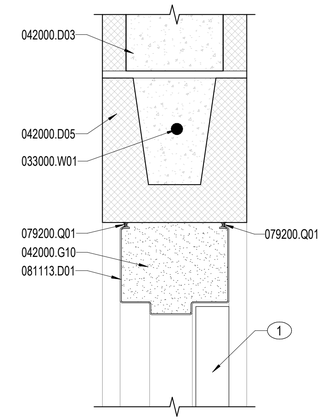

C4 HEAD DETAIL
3" = 1'-0" OAE601

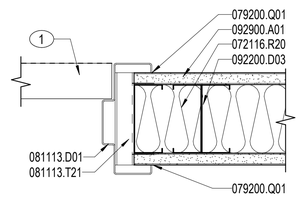

C2 JAMB DETAIL
3" = 1'-0" OAE601

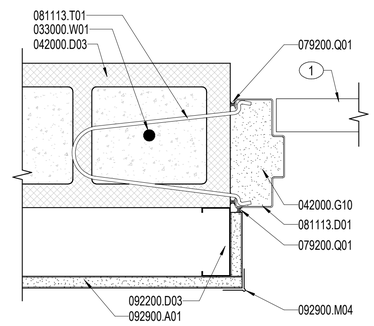

B3 JAMB DETAIL
3" = 1'-0" OAE601

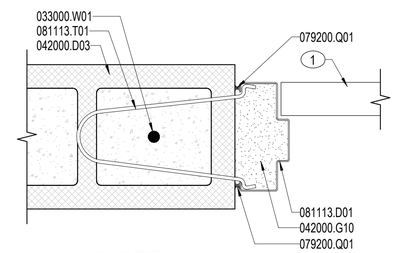

B4 JAMB DETAIL
3" = 1'-0" OAE601

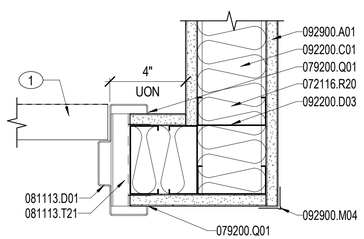

B2 JAMB DETAIL
3" = 1'-0" OAE601

NOTES:

SHEET NOTES:

A REFER TO SHEET OAE001 FOR GENERAL ABBREVIATIONS AND ARCHITECTURAL SYMBOLS.
B DOOR HARDWARE SETS ARE SPECIFIED IN SPECIFICATION SECTION 08 71 00.
C REFER TO SHEET OAE601 FOR DOOR / FRAME TYPES.
D FIELD VERIFY ALL DIMENSIONS.
E DOOR DIMENSIONS ARE NOMINAL. ROUGH OPENING SIZES TO BE COORDINATED WITH PRECAST DIMENSIONS. TYPICAL.
F DOOR FRAME PROFILES ARE GENERIC. REFER TO SPECIFICATION SECTION 08 11 13 FOR PERFORMANCE REQUIREMENTS.
G PROVIDE DRIP STRIP AT ALL HOLLOW METAL EXTERIOR DOORS.

KEY NOTES (00)

1 REFER TO DOOR SCHEDULE FOR SPECIFIC DOOR TYPE.

MATERIAL NOTES

033000.W01	REINFORCING STEEL
042000.D03	CMU 8"
042000.D05	CMU BOND BEAM
042000.G10	GROUT SOLID
072116.R20	SOUND ATTENUATION BATTS
079200.Q01	JOINT SEALANT
081113.D01	STEEL DOOR FRAME
081113.T01	MASONRY ANCHOR
081113.T21	METAL STUD ANCHOR
092200.C01	METAL STUD
092200.C02	METAL STUD RUNNER TRACK
092200.D03	METAL STUD 3 5/8"
092900.A01	GYPSUM BOARD, REGULAR 5/8"
092900.M04	CORNERBEAD

0 1" 5" 10" 15"
3" = 1'-0" GRAPHIC SCALE

NOTE:
IF THIS DRAWING IS LESS THAN 34" X 22"
IT IS A REDUCED SIZE DRAWING

SYM	DESCRIPTION	DATE	APPR
1	MOD P00005	05/2023	
2	MOD P00006 AND MOD P00007	10/2025	

NAVFAC

STATE OF FLORIDA
BILLY KEITH HOLLOWAY
AR93022
REGISTERED ARCHITECT
11.21.25
SEAL

BAMFORTH
CONSULTING ARCHITECTS

AE INFO

APPROVED
FOR COMMANDER NAVFAC 11/21/2025
ACTIVITY Approved by J. Scott Roberts, Asset Management Branch Head & Supervisory Facility Planner, PWD Beaufort, SC via email.
SATISFACTORY TO DATE 12/15/2022

DES EAD	DRW MEC	CHK BKH	
PM/DM	KTB / RLH		
BRANCH MANAGER	CGM		
CHIEF ENG/ARCH	EJA		
FP ENGINEER	DSN		

DEPARTMENT OF THE NAVY
NAVAL FACILITIES ENGINEERING SYSTEMS COMMAND
DC CODE NAVAL FACILITIES ENGINEERING SYSTEMS COMMAND ~ MID-ATLANTIC NORFOLK, VA
MCAS BEAUFORT BEAUFORT, SC
P-475 AIRCRAFT MAINTENANCE HANGAR - VOLUME 3 (OSF OPTION)
INTERIOR DOOR DETAILS

SCALE: 3" = 1'-0"
EPROJECT NO.: 1363603
CONSTR. CONTR. NO.
NAVFAC DRAWING NO.: 12860165
SHEET 964 OF 1412

OAE622

DRAWFORM REVISION: 28 AUGUST 2020

Autodesk Docs://20043 MRAF 502 F35 Maintenance Hangar/20043 F35 Maint Hangar_OSF Shop Annex.rvt
11/3/2025 9:10:47 PM

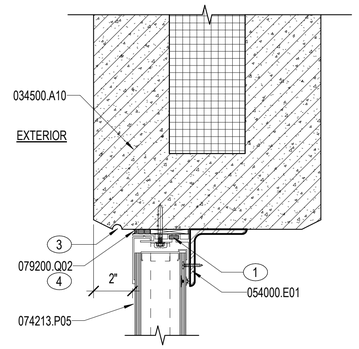

C3 TRANSLUCENT WINDOW HEAD
3" = 1'-0"
OAE312, OAE601

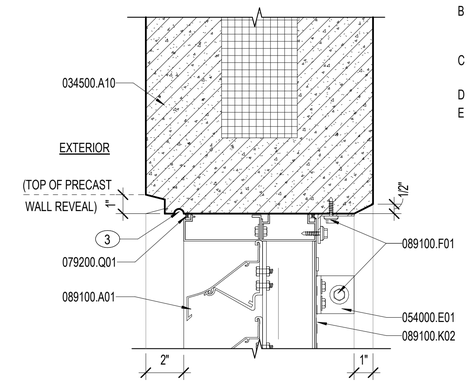

C4 LOUVER HEAD DETAIL
3" = 1'-0"
OAE522, OAE601

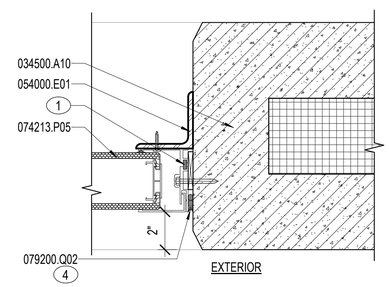

B3 TRANSLUCENT WINDOW JAMB
3" = 1'-0"
OAE601

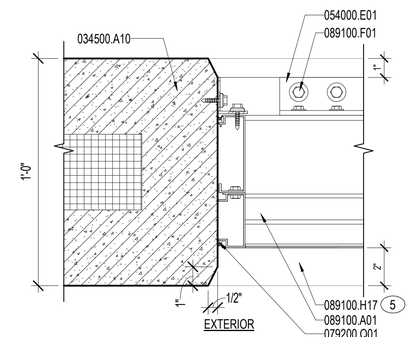

B4 LOUVER JAMB DETAIL
3" = 1'-0"
OAE601

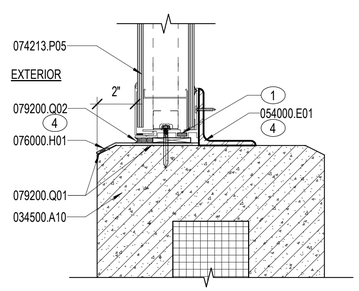

A3 TRANSLUCENT WINDOW SILL
3" = 1'-0"
OAE312, OAE601

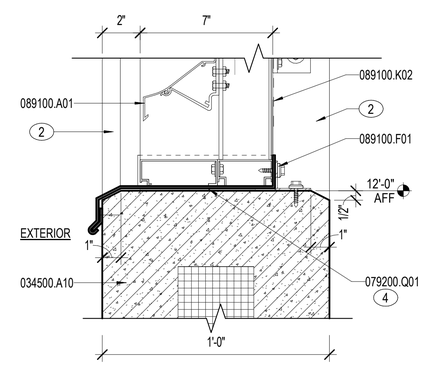

A4 LOUVER SILL DETAIL
3" = 1'-0"
OAE601

NOTES:

SHEET NOTES:

A REFER TO SHEET OAE001 FOR GENERAL ABBREVIATIONS AND ARCHITECTURAL SYMBOLS.

B TRANSLUCENT PANEL ARE INTEGRATED WITH THE INSULATED METAL WALL PANEL SYSTEM. REFER TO SPECIFICATION SECTION 07 14 13 FOR PERFORMANCE REQUIREMENTS.

C LOUVER PROFILES ARE GENERIC. REFER TO SPECIFICATION SECTION 08 91 00 FOR PERFORMANCE REQUIREMENTS.

D DIMENSIONS ARE NOMINAL. ROUGH OPENING SIZES TO BE COORDINATED.

E FIELD VERIFY ALL DIMENSIONS.

KEY NOTES (00)

1 THERMAL BREAK.
2 INSULATED PRECAST WALL SYSTEM BEYOND.
3 PRECAST PANEL DRIP EDGE.
4 DOUBLE.
5 BEYOND.

MATERIAL NOTES

034500.A10	PRECAST NOMINAL CONCRETE INSULATED WALL PANEL
054000.E01	METAL CLIP ANGLE
074213.P05	TRANSLUCENT PANEL SYSTEM
076000.H01	METAL FLASHING
079200.Q01	JOINT SEALANT
079200.Q02	BACKSTOP AND SEALANT
089100.A01	EXTRUDED ALUMINUM WALL LOUVER
089100.F01	FASTENER
089100.H17	SILL FLASHING WITH END DAMS
089100.K02	WIRE BIRD SCREEN

0 1" 5" 10" 15"
3" = 1'-0" GRAPHIC SCALE

NOTE:
IF THIS DRAWING IS LESS THAN 34" X 22"
IT IS A REDUCED SIZE DRAWING

SYM	DESCRIPTION	DATE	APPR.
1	MOD P00005	05/2023	
2	MOD P00006 AND MOD P00007	10/2025	

NAVFAC

STATE OF FLORIDA
BILLY KEITH HOLLOWAY
AR93022
REGISTERED ARCHITECT
11.13.23
SEAL

BAMFORTH
ARCHITECTURE & DESIGN

AE INFO

APPROVED
FOR COMMANDER NAVFAC 11/21/2025
ACTIVITY
Approved by J. Scott Roberts,
Asset Management Branch Head &
Supervisory Facility Planner, PWD
Beaufort, SC via email.
SATISFACTORY TO DATE 12/15/2022

DES	EAD	DRW KJF	CHK BKH
PM/DM	KTB / RLH		
BRANCH MANAGER	CGM		
CHIEF ENG/ARCH	EJA		
FP ENGINEER	DSN		

DEPARTMENT OF THE NAVY
NAVAL FACILITIES ENGINEERING SYSTEMS COMMAND
DC CODE:
NAVAL FACILITIES ENGINEERING SYSTEMS COMMAND – MID-ATLANTIC
NORFOLK, VA
MCAS BEAUFORT
BEAUFORT, SC
P-475 AIRCRAFT MAINTENANCE HANGAR - VOLUME 3 (OSF OPTION)
LOUVER AND TRANSLUCENT PANEL DETAILS

SCALE: 3" = 1'-0"
EPROJECT NO.: 1363603
CONSTR. CONTR. NO.
NAVFAC DRAWING NO. 12860166
SHEET 965 OF 1412
OAE631

DRAWFORM REVISION: 25 AUGUST 2020

Autodesk Docs://20042 MIFA F 502 F50 Maintenance Hangar/20042 F 50 Maint Hangar_OSF Shop Annex.rvt
11/3/2025 9:10:20 PM

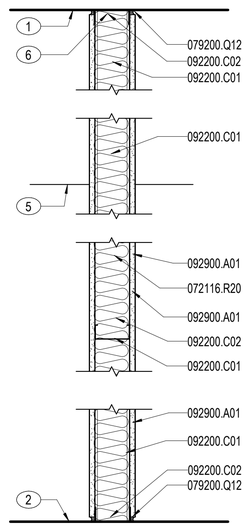

MINIMUM REQUIRED STC = 40 OR 45
UL DESIGN NO. U419 FOR 1HR FIRE RATING

WALL ASSEMBLY TYPE A

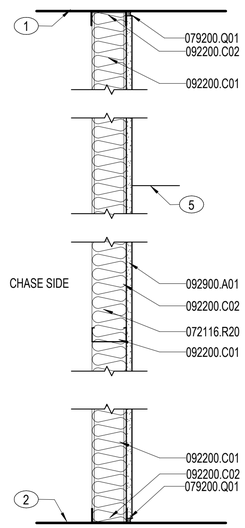

MINIMUM REQUIRED STC = 29

WALL ASSEMBLY TYPE B

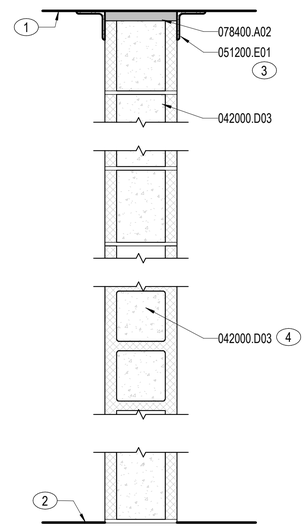

UL DESIGN NO. U905 FOR 1HR FIRE RATING

WALL ASSEMBLY TYPE M

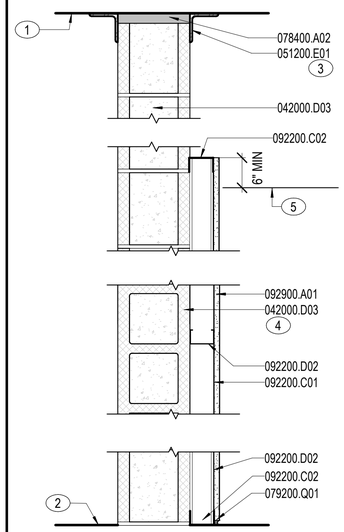

UL DESIGN NO. U905 FOR 1HR FIRE RATING

WALL ASSEMBLY TYPE N

HEAD
CEILING
PLAN
BASE

PARTITION TYPE NAMING CONVENTION

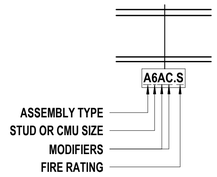

METAL STUD AND CMU SIZES
1 = 1 1/2" FURRING OR 1 5/8" STUD
2 = 2 1/2" STUD
3 = 3 5/8" STUD
4 = 4" STUD OR 4" CMU
6 = 6" STUD OR 6" CMU
7 = 7/8" FURRING
8 = 8" STUD OR 8" CMU

PARTITION MODIFIERS
A = SOUND ATTENUATION BATTS NOT REQUIRED

B = GLASS MAT FACED GYPSUM BOARD (092900.B01) ONE SIDE IN LIEU OF REGULAR GYPSUM BOARD

C= GLASS MAT FACED GYPSUM BOARD (092900.B01) BOTH SIDES IN LIEU OF REGULAR GYPSUM BOARD

D = GLASS MAT TILE BACKER BOARD (092900.B04) ONE SIDE WHERE TILE IS SCHEDULED IN LIEU OF REGULAR GYPSUM BOARD

E = GLASS MAT TILE BACKER BOARD (092900.B04) BOTH SIDES WHERE TILE IS SCHEDULED IN LIEU OF REGULAR GYPSUM BOARD

F = GYPSUM BD TO STOP 6" ABOVE CEILING.

FIRE RATING
S = SMOKE RESISTIVE PARTITION
B = SMOKE BARRIER
1 = 1 HR FIRE BARRIER
2 = 2 HR FIRE BARRIER

NOTES:

SHEET NOTES:

A REFER TO SHEET OAE001 FOR GENERAL ABBREVIATIONS AND ARCHITECTURAL SYMBOLS.

B EXTEND FIRE RATED WALL CONSTRUCTION BEHIND RECESSED OR BUILT-IN EQUIPMENT SUCH AS FIRE EXTINGUISHER CABINETS (FEC), ELECTRICAL WATER COOLERS (EWC), ELECTRIC PANELS, ETC.

C PROVIDE AND INSTALL ALL STIFFENERS, BRACING, BACK UP PLATES AND SUPPORTING BRACKETS REQUIRED FOR THE INSTALLATION OF ALL CASEWORK AND OF ALL FLOOR MOUNTED OR SUSPENDED MECHANICAL OR ELECTRICAL EQUIPMENT. REFER TO QH DRAWING SERIES.

D WHERE HVAC OR OTHER MECHANICAL, ELECTRICAL OR PLUMBING ITEMS PENETRATE PARTITIONS, STUDS SHALL BE BRACED AND FRAMED TO STRUCTURE AS REQUIRED TO PROVIDE ADEQUATE SUPPORT. ALL PENETRATIONS THROUGH RATED WALLS SHALL BE SEALED TO PROVIDE FIRE, SMOKE, AND /OR ACOUSTICAL ISOLATION OF SPACES WITH APPROPRIATE FIRESTOP MATERIAL. REFER TO FIRE RATED PENETRATION DETAILS, SHEET 0AE821.

E THERE SHALL BE NO BACK-TO-BACK ELECTRICAL, TELEPHONE, OR OTHER OUTLETS, EXCEPT WHERE SPECIFICALLY INDICATED. AT ACOUSTICALLY SENSITIVE AREAS, SUCH AS CONFERENCE ROOMS, OFFSET OUTLETS IN OPPOSITE SIDES OF THE WALL BY AT LEAST TWO STUD CAVITIES.

F WHERE "SEALANT" IS INDICATED ON WALL TYPES, PROVIDE ACOUSTICAL (SOUND) SEALANT AT NON-RATED WALLS AND FIRE-RATED SEALANT AT RATED WALLS AS REQUIRED BY FIRE RATING TEST NUMBER.

G CONTROL JOINTS TO BE INSTALLED AT A MINIMUM OF 30 FEET IN UNINTERUPTED INTERIOR GYPSUM BOARD WALLS. PROPOSED CONTROL JOINT LOCATIONS TO BE REVIEWED AND APPROVED BY ARCHITECT.

H REFER TO STRUCTURAL NOTES FOR TYPICAL CMU WALL REINFORCEMENT AND LINTEL SIZES.

I REFER TO OAF601 FOR WALL BASE TYPE, TILE TYPE, TILE HEIGHT AND OTHER MATERIALS APPLIED TO WALLS.

J PROVIDE GLASS MAT FACED GYPSUM BOARD TILE BACKER UNIT AT ALL WALLS THAT RECEIVE TILE.

K REFER TO UL ASSEMBLY LISTED FOR REQUIREMENTS NECESSARY TO ACHIEVE FIRE RATING.

L PROVIDE DRYWALL CONTROL JOINTS AT 30' MAX. JOINTS TO BE LOCATED AT NEAREST DOOR JAMB WHERE POSSIBLE.

M REFER TO SHEET OAE821 FOR TYPICAL RATED WALL PENETRATION DETAILS.

N PROVIDE GLASS MAT FACED GYPSUM BOARD AT THE FOLLOWING LOCATIONS UNO: WALLS AND CEILINGS OF TOILET ROOMS, JANITORS' CLOSETS, WITHIN 48 INCHES OF SINKS AND DRINKING FOUNTAINS, MECHANICAL ROOMS AND INTERIOR CLADDING OF EXTERIOR WALLS.

O FOR RATED AND NON-RATED WALL PARTITION CONNECTION TO FLOOR OR ROOF DECK ABOVE SEE DETAILS ON SHEET OAE801.

KEY NOTES (00)

1 BOTTOM OF DECK.
2 TOP OF SLAB.
3 REFER TO STRUCTURAL DRAWINGS.
4 PROVIDE BLOCK CONTROL JOINTS MAX. 30'-0" SPACING, REFER TO STRUCTURAL DRAWING SF501 FOR TYPICAL BLOCK REINFORCEMENT INFORMATION.
5 CEILING WHERE SCHEDULED ON FINISH SCHEDULE.
6 SLIP TRACK. REFER TO STRUCTURAL FOR ADDITIONAL REQUIREMENTS.
7 (1) - # 5 CONT.
8 EXTERIOR WALL SYSTEM.

MATERIAL NOTES

033000.A01	CAST-IN-PLACE CONCRETE
042000.D03	CMU 8"
042000.G10	GROUT SOLID
042000.W01	REINFORCING STEEL
051200.E01	STEEL ANGLE
051200.E03	STEEL PLATE, BENT
053000.A01	STEEL DECK
055013.T04	EXPANSION ANCHOR
072116.R20	SOUND ATTENUATION BATTS
078400.A01	FIRESTOPPING MATERIAL
078400.A02	FIRESAFING SYSTEM
079200.Q01	JOINT SEALANT
079200.Q12	ACOUSTICAL SEALANT
092200.C01	METAL STUD
092200.C02	METAL STUD RUNNER TRACK
092200.D02	METAL STUD 2 1/2"
092900.A01	GYPSUM BOARD, REGULAR 5/8"
092900.B01	GYPSUM BOARD, GLASS MAT FACED 5/8"

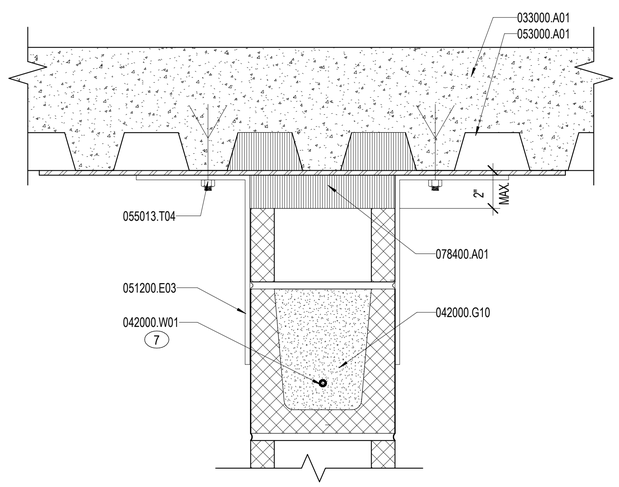

UL # HW-D-0366

A1 HEAD OF WALL - 1HR MASONRY
3" = 1'-0"

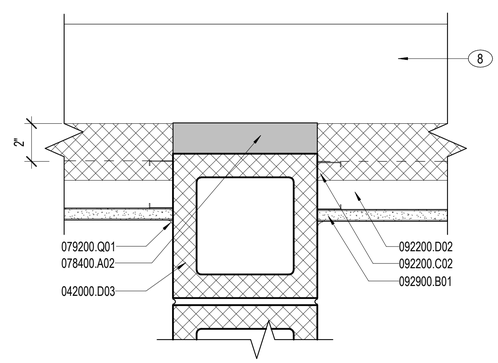

A3 PLAN DETAIL - RATED CMU AT EXTERIOR WALL
3" = 1'-0"

0 1" 5" 10" 15"
3" = 1'-0" GRAPHIC SCALE

NOTE:
IF THIS DRAWING IS LESS THAN 34" X 22"
IT IS A REDUCED SIZE DRAWING

SYM	DESCRIPTION	DATE	APPR
1	MOD P00005	05/2023	
2	MOD P00006 AND MOD P00007	10/2025	

NAVFAC

STATE OF FLORIDA
BILLY KEITH HOLLOWAY
AR93022
REGISTERED ARCHITECT
SEAL

BAMFORTH
ARCHITECTURE & ENGINEERING

AE INFO

APPROVED
FOR COMMANDER NAVFAC 11/21/2025
ACTIVITY
Approved by J. Scott Roberts, Asset Management Branch Head & Supervisory Facility Planner, PWD Beaufort, SC via email.

SATISFACTORY TO DATE	12/15/2022
DES EAD	DRW MEC / CHK BKH
PMDM	KTB / RLH
BRANCH MANAGER	CGM
CHIEF ENG/ARCH	EJA
FP ENGINEER	DSN

DEPARTMENT OF THE NAVY
NAVAL FACILITIES ENGINEERING SYSTEMS COMMAND ~ MID-ATLANTIC
NORFOLK, VA
DC CODE: MCAS BEAUFORT
BEAUFORT, SC
P-475 AIRCRAFT MAINTENANCE HANGAR - VOLUME 3 (OSF OPTION)
PARTITION TYPES AND DETAILS

SCALE: As indicated
EPROJECT NO.: 1363603
CONSTR. CONTR. NO.
NAVFAC DRAWING NO.: 12860167
SHEET 966 OF 1412
OAE801

DRAWFORM REVISION: 25 AUGUST 2020

Autodesk Docs://2042 MFA IT 102 F35 Maintenance Hangar/2042 F35 Maint Hangar_OSF Shop Annex.rvt
11/3/2025 9:10:54 PM

THROUGH-PENETRATION FIRESTOP SYSTEM SCHEDULE

FIRESTOP SYSTEMS ARE LISTED USING THE ALPHA-ALPHA-NUMERIC IDENTIFICATION SYSTEM PUBLISHED IN UL'S FIRE RESISTANT DIRECTORY, VOL. 2

	CONSTRUCTION		
	FLOOR PENETRATION SYSTEM (FIRST ALPHA COMPONENT = C or F)	WALL PENETRATION SYSTEM (FIRST ALPHA COMPONENT = C or W)	
	CONCRETE FLOORS WITH A MIN. THICKNESS LESS THAN OR EQUAL TO 5"	CONCRETE OR MASONRY WALLS	FRAMED GYPSUM WALLS
TYPE OF PENETRANT	1 HOUR MIN.	1 HOUR	1 HOUR
NO PENETRATING ITEMS	F-A-0000 -0999 or C-AJ-0000 -0999	W-J-0000 -0999 or C-AJ-0000 -0999	W-L-0030
METALLIC PIPE, CONDUIT OR TUBING	F-A-1000 -1999 or C-AJ-1000 -1999	W-J-1000 -1999 or C-AJ-1000 -1999	W-L-1000 -1999
NONMETALLIC PIPE, CONDUIT OR TUBING	F-A-2000 -2999 or C-AJ-2000 -2999	W-J-2000 -2999 or C-AJ-2000 -2999	W-L-2000 -2999
COMMUNICATIONS CABLES	F-A-3000 -3999 or C-AJ-3000 -3999	W-J-3000 -3999 or C-AJ-3000 -3999	W-L-3000 -3999
CABLE TRAYS WITH COMMUNICATIONS CABLES	F-A-4000 -4999 or C-AJ-4000 -4999	W-J-4000 -4999 or C-AJ-4000 -4999	W-L-4000 -4999
INSULATED PIPES	F-A-5000 -5999 or C-AJ-5000 -5999	W-J-5000 -5999 or C-AJ-5000 -5999	W-L-5000 -5999
MISCELLANEOUS MECHANICAL PENETRANTS	F-A-7000 -7999 or C-AJ-7000 -7999	W-J-7000 -7999 or C-AJ-7000 -7999	W-L-7000 -7999
GROUPING OF PENETRATIONS	F-A-8000 -8999 or C-AJ-8000 -8999	W-J-8000 -8999 or C-AJ-8000 -8999	W-L-8000 -8999

FOR EACH LOCATION WHERE A FIRE-RESISTANCE-RATED FLOOR OR WALL ASSEMBLY IS PENETRATED, PROVIDE A UL-LISTED THROUGH-PENETRATION FIRESTOP SYSTEM SELECTED FROM THE APPLICABLE UL NUMBER RANGE LISTED ABOVE THAT COMPLIES WITH SECTION --078400 -FIRESTOPPING-- AND IS SUITABLE FOR THE PENETRATION CONDITIONS INDICATED FOR THE PROJECT.

SYSTEM DESIGNATIONS

THE FIRST ALPHA COMPONENT IS ONE OF THREE LETTERS REPRESENTING THE TYPE OF PENETRATION:

LETTER	CONSTRUCTION PENETRATED
F	FLOOR PENETRATIONS
W	WALL PENETRATIONS
C	EITHER FLOOR OR WALL PENETRATIONS

THE SECOND ALPHA COMPONENT DESCRIBES THE TYPE OF CONSTRUCTION BEING PENETRATED AND CAN INCLUDE A SINGLE LETTER OR DUAL LETTERS:

LETTER	DESCRIPTION
A	CONCRETE FLOORS WITH A MINIMUM THICKNESS LESS THAN OR EQUAL TO 5 INCHES.
B	CONCRETE FLOORS WITH A MINIMUM THICKNESS OF MORE THAN 5 INCHES.
C	FRAMED FLOORS
D	STEEL DECKS IN MARINE VESSELS
E	FLOOR/CEILING ASSEMBLIES CONSISTING OF CONCRETE WITH MEMBRANE PROTECTION
F THRU I	NOT USED NOW
J	CONCRETE OR MASONRY WALLS WITH A MINIMUM THICKNESS LESS THAN OR EQUAL TO 8 INCHES
K	CONCRETE OR MASONRY WALLS WITH A MINIMUM THICKNESS OF MORE THAN 8 INCHES
L	FRAMED WALLS
M	BULKHEADS IN MARINE VESSELS

KEYNOTES:

1. FIRE RESISTANT OR SMOKE RATED FLOOR CONSTRUCTION.
2. FIRE RESISTANT OR SMOKE RATED WALL CONSTRUCTION.
3. PENETRANT - REFER TO SCHEDULE FOR TYPE.
4. THROUGH PENETRATION FIRE STOP SYSTEM - PROVIDE SYSTEM IN ACCORDANCE WITH FIRESTOP SCHEDULE.

B3 THROUGH-PENETRATION FIRESTOP SYSTEM SCHEDULE (1 hr)

1/8" = 1'-0"

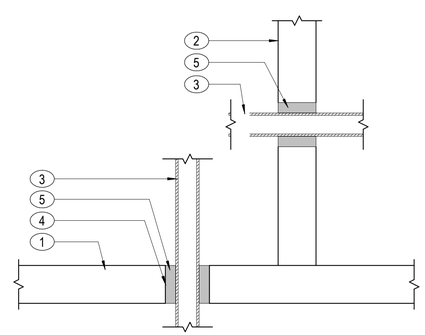

NOTE: SEE THROUGH-PENETRATION FIRESTOP SYSTEM SCHEDULE FOR SPECIFIC UL DESIGNATION AND DETAIL

A3 THROUGH-PENETRATION FIRESTOP SYSTEM KEY

1 1/2" = 1'-0"

NOTES:

SHEET NOTES:

A REFER TO SHEET OAE001 FOR GENERAL ABBREVIATIONS AND ARCHITECTURAL SYMBOLS.

B EXTEND FIRE RATED WALL CONSTRUCTION BEHIND RECESSED OR BUILT-IN EQUIPMENT SUCH AS FIRE EXTINGUISHER CABINETS (FEC), ELECTRICAL WATER COOLERS (EWC), ELECTRIC PANELS, ETC.

C WHERE HVAC OR OTHER MECHANICAL, ELECTRICAL OR PLUMBING ITEMS PENETRATE PARTITIONS, STUDS SHALL BE BRACED AND FRAMED TO STRUCTURE AS REQUIRED TO PROVIDE ADEQUATE SUPPORT. ALL PENETRATIONS THROUGH RATED WALLS SHALL BE SEALED TO PROVIDE FIRE, SMOKE, AND /OR

D WHERE "SEALANT" IS INDICATED ON WALL TYPES, PROVIDE ACOUSTICAL (SOUND) SEALANT AT NON-RATED WALLS AND FIRE-RATED SEALANT AT RATED WALLS AS REQUIRED BY FIRE RATING TEST NUMBER.

E REFER TO UL ASSEMBLY LISTED FOR REQUIREMENTS NECESSARY TO ACHIEVE FIRE RATING.

KEY NOTES (00)

1 FIRE RESISTANT OR SMOKE RATED FLOOR CONSTRUCTION.
2 FIRE RESISTANT RATED WALL CONSTRUCTION.
3 PENETRANT - REFER TO SCHEDULE FOR TYPE.
4 PROVIDE PIPE SLEEVE AT ALL FLOOR PENETRATIONS, WHERE AVAILABLE AS AN OPTION IN THE TESTED ASSEMBLY.
5 THROUGH PENETRATION FIRE STOP SYSTEM - PROVIDE SYSTEM IN ACCORDANCE W/ FIRE STOPPING SCHEDULE.

0 ½" 1" 2" 3" 4"
1'-0" = 1'-0" GRAPHIC SCALE

NOTE:
IF THIS DRAWING IS LESS THAN 34" X 22"
IT IS A REDUCED SIZE DRAWING

SYM	DESCRIPTION	DATE	APPR
1	MOD P00005	05/2023	
2	MOD P00006 AND MOD P00007	10/2025	

NAVFAC

STATE OF FLORIDA
BILLY KEITH HOLLOWAY
AR93022
REGISTERED ARCHITECT
11.13.23
SEAL

BAMFORTH
ARCHITECTURE & DESIGN, PLLC
AE INFO

APPROVED
FOR COMMANDER NAVFAC 11/21/2025

ACTIVITY: Approved by J. Scott Roberts, Asset Management Branch Head & Supervisory Facility Planner, PWD Beaufort, SC via email.

SATISFACTORY TO DATE	12/15/2022
DES EAD / DRW MEC / CHK BKH	
PM/DM	KTB / RLH
BRANCH MANAGER	CGM
CHIEF ENG/ARCH	EJA
FP ENGINEER	DSN

DEPARTMENT OF THE NAVY
NAVAL FACILITIES ENGINEERING SYSTEMS COMMAND
DC CODE
NAVAL FACILITIES ENGINEERING SYSTEMS COMMAND ~ MID-ATLANTIC
NORFOLK, VA
MCAS BEAUFORT
BEAUFORT, SC
P-475 AIRCRAFT MAINTENANCE HANGAR - VOLUME 3 (OSF OPTION)
FIRE RATED PENETRATIONS

SCALE:	As indicated
EPROJECT NO.:	1363603
CONSTR. CONTR. NO.	
NAVFAC DRAWING NO.	12860168
SHEET 967 OF 1412	

OAE821

DRAWFORM REVISION 28 AUGUST 2020

Autodesk Docs://20043 MIRAT 502 735 Maintenance Hangar/20043 F 535 Maint Hangar_OSF Shop Annex.rvt
11/3/2025 9:15:27 PM

NOTES:

SHEET NOTES:

A REFER TO SHEETS OAE001 FOR GENERAL ABBREVIATIONS AND ARCHITECTURAL SYMBOLS.

B THE 3D AXONOMETRIC VIEWS PROVIDED ARE FOR REFERENCE ONLY AND ARE NOT MEANT TO REPLACE THE INFORMATION PROVIDED IN THE CONSTRUCTION DOCUMENTS. THIS SHEET IS NOT FOR CONSTRUCTION BUT IS INLCUDED AS AN AIDE FOR VISUALIZATION.

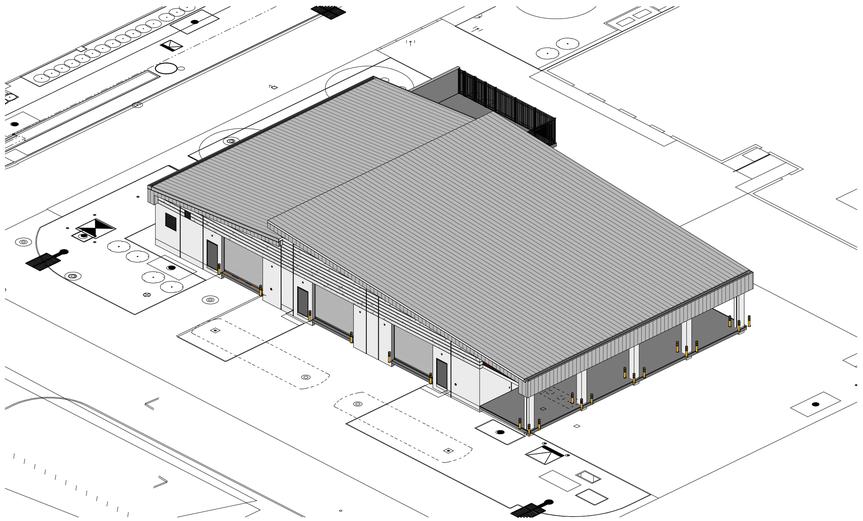

C1 3D VIEW - NORTHEAST

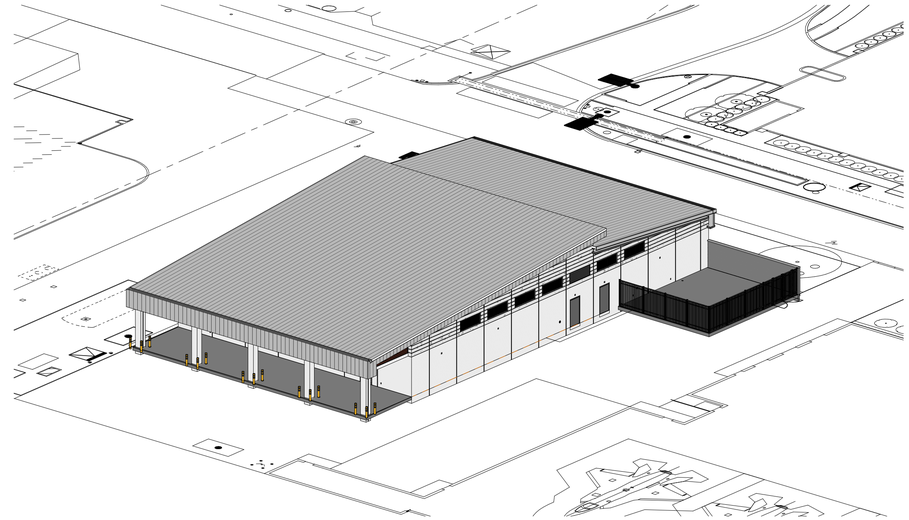

C3 3D VIEW - NORTHWEST

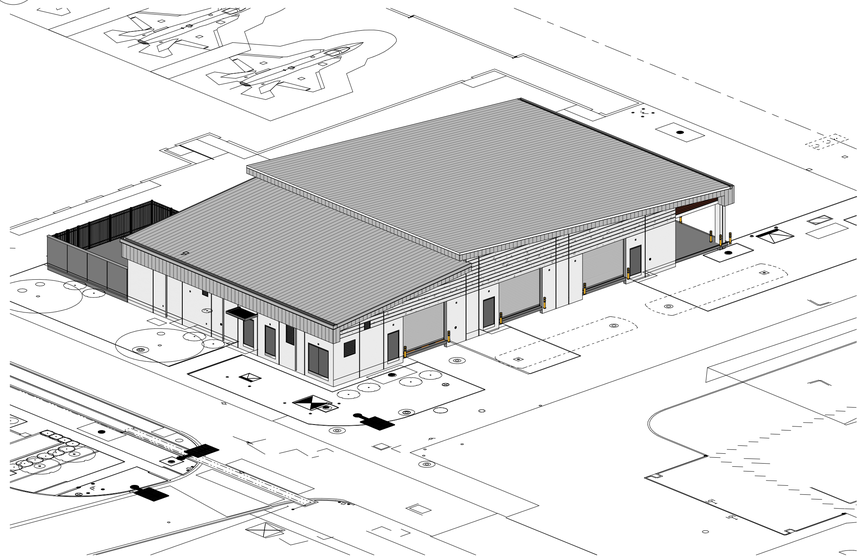

A1 3D VIEW - SOUTHEAST

A3 3D VIEW - SOUTHWEST

NOTE:
IF THIS DRAWING IS LESS THAN 34" X 22"
IT IS A REDUCED SIZE DRAWING

SYM	DESCRIPTION	DATE	APPR
1	MOD P00005	05/2023	
2	MOD P00006 AND MOD P00007	10/2025	

NAVFAC

STATE OF FLORIDA
BILLY KEITH HOLLOWAY
AR93022
11/13/23
REGISTERED ARCHITECT
SEAL

BAMFORTH
CONSULTING ENGINEERS

AE INFO

APPROVED
FOR COMMANDER NAVFAC 11/21/2025

ACTIVITY
Approved by J. Scott Roberts,
Asset Management Branch Head &
Supervisory Facility Planner, PWD
Beaufort, SC via email.

SATISFACTORY TO DATE	12/15/2022
DES EAD / DRW TCS / CHK BKH	
PMDM	KTB / RLH
BRANCH MANAGER	CGM
CHIEF ENG/ARCH	EJA
FP ENGINEER	DSN

DEPARTMENT OF THE NAVY
NAVAL FACILITIES ENGINEERING SYSTEMS COMMAND
DC CODE:
MCAS BEAUFORT

NAVAL FACILITIES ENGINEERING SYSTEMS COMMAND ~ MID-ATLANTIC
NORFOLK, VA

BEAUFORT, SC

P-475 AIRCRAFT MAINTENANCE HANGAR - VOLUME 3 (OSF OPTION)

AXONOMETRIC VIEWS

SCALE:
EPROJECT NO.: 1363603
CONSTR. CONTR. NO.
NAVFAC DRAWING NO.: 12860169
SHEET 968 OF 1412

OAE901

DRAWFORM REVISION: 25 AUGUST 2020

Autodesk Docs://2042 MWAT 102 F35 Maintenance Hangar/2042 F35 Maint Hangar_OSF Shop Annex.rvt
11/3/2025 9:11:12 PM