GENERAL NOTES:

1. THE STRUCTURAL DRAWINGS MUST BE USED IN CONJUNCTION WITH THE ARCHITECTURAL, CIVIL, MECHANICAL, PLUMBING, AND ELECTRICAL DRAWINGS AND THE SPECIFICATIONS. THE CONTRACTOR MUST VERIFY THE REQUIREMENTS OF OTHER TRADES FOR ITEMS TO BE PLACED OR SET IN THE STRUCTURAL WORK.

2. THIS STRUCTURE HAS BEEN DESIGNED IN ACCORDANCE WITH THE PROVISIONS OF THE INTERNATIONAL BUILDING CODE, 2018 EDITION, AS ADOPTED BY THE UNIFIED FACILITIES CRITERIA, AND AS FOLLOWS:
   - A. UFC 1-200-01 — DoD BUILDING CODE, OCTOBER 8, 2019 WITH CHANGE 1, OCTOBER 1, 2020
   - B. UFC 3-220-01 — GEOTECHNICAL ENGINEERING NOVEMBER 1, 2012
   - C. UFC 3-301-01 — STRUCTURAL ENGINEERING OCTOBER 1, 2019
   - D. UFC 3-320-06A — CONCRETE FLOOR SLAB-ON-GRADE SUBJECTED TO HEAVY LOADS, MARCH 1, 2005
   - E. UFC 4-010-01 — DoD MINIMUM ANTITERRORISM STANDARDS FOR BUILDINGS DECEMBER 8, 2018 WITH CHANGE 1, AUGUST 1, 2020
   - F. UFC 3-110-03 — ROOFING MAY 1, 2012 WITH CHANGE 5, JUNE 12, 2020

3. THE WORK UNDER THE FOLLOWING SPECIFICATION SECTIONS IS SUBJECT TO SPECIAL INSPECTIONS AND TESTS AS DESCRIBED IN SECTION 1704 OF THE INTERNATIONAL BUILDING CODE, 2018 EDITION:
   - A. 033000 - CAST-IN-PLACE CONCRETE
   - B. 034500 - PRECAST ARCHITECTURAL CONCRETE
   - C. 042000 - UNIT MASONRY
   - D. 051200 - STRUCTURAL STEEL
   - E. 052100 - STEEL JOIST FRAMING
   - F. 053000 - STEEL DECK
   - G. 312300.0020 - EXCAVATION AND FILL
   - H. 316213.20 - PRECAST / PRESTRESSED CONCRETE PILES

   THIS PROJECT IS SUBJECT TO IBC SPECIAL INSPECTION REQUIREMENTS AS MODIFIED BY UFC 3-301-01. THE STATEMENT AND SCHEDULE OF SPECIAL INSPECTIONS DEFINE THE SCOPE OF SPECIAL INSPECTIONS ARE INCLUDED WITH THE PROJECT SPECIFICATIONS. SPECIAL INSPECTIONS FOR WIND AND SEISMC RESISTANCE AND STRUCTURAL OBSERVATIONS FOR WIND REQUIREMENTS AND SEISMIC RESISTANCE ARE NOT REQUIRED SINCE THE NOMINAL WIND SPEED FOR THE PROJECT LOCATION IS LESS THAN 110 MPH AND THE RISK CATEGORY IS II. STRUCTURAL OBSERVATIONS FOR PROGRESSIVE COLLAPSE AVOIDANCE ARE NOT REQUIRED.

4. THE CONTRACTOR MUST BE RESPONSIBLE FOR TEMPORARY SHORING AND BRACING REQUIRED TO ERECT AND HOLD THE STRUCTURE IN PROPER ALIGNMENT UNTIL PERMANENT SUPPORTS AND LATERAL BRACING ARE IN PLACE.

5. REFER TO THE SPECIFICATIONS FOR ADDITIONAL REQUIREMENTS IN EACH SECTION.

6. SPECIFIC NOTES AND DETAILS ON THE DRAWINGS MUST TAKE PRECEDENCE OVER STRUCTURAL NOTES AND TYPICAL DETAILS.

7. CONSULTANTS' DRAWINGS, INCLUDING STRUCTURAL DRAWINGS, ARE CONSIDERED SUPPLEMENTARY TO THE ARCHITECTURAL DRAWINGS. ANY OMISSIONS OR CONFLICTS, INCLUDING DIMENSIONS, BETWEEN VARIOUS ELEMENTS OF THE CONSULTANTS' DRAWINGS AND/OR SPECIFICATIONS MUST BE BROUGHT TO THE ATTENTION OF THE ARCHITECT AND CONTRACTNG OFFICER PRIOR TO PROCEEDING WITH THE WORK.

8. THE STRUCTURAL DOCUMENTS MUST NOT BE REPRODUCED, OR COPIED IN WHOLE OR IN PART BY THE CONTRACTOR OR SUBCONTRACTORS FOR PREPARATION OF SHOP DRAWINGS OR OTHER SUBMITTALS WITHOUT WRITTEN PERMISSION FROM THE ARCHITECT AND CONTRACTING OFFICER.

9. LOADS USED IN THE DESIGN OF THIS STRUCTURE ARE AS FOLLOWS:
   - A. LIVE LOADS:
     - 1. SLAB-ON-GRADE (UNIFORM)
     - 2. ROOF — 250 PSF
     - 20 PSF
   - B. SNOW DESIGN DATA:
     - 1. GROUND SNOW LOAD — 5 PSF
   - C. WIND DESIGN DATA:
     - 1. ULTIMATE DESIGN WIND SPEED
     - 2. NOMINAL DESIGN WIND SPEED — 139 MPH
     - 3. RISK CATEGORY — 108 MPH
     - 4. WIND EXPOSURE — II
     - 5. INTERNAL PRESSURE COEFFICIENT — C
     - 6. WIND DIRECTIONALITY FACTOR, Kd — ±0.18
     - 7. GUST EFFECT FACTOR, Gf — 0.85
     - 8. TOPOGRAPHIC FACTOR, Kzt — 0.85
     - 9. GROUND ELEVATION FACTOR, Ke — 1.0
     - 10. DESIGN WIND PRESSURES ARE DETERMINED AND APPLIED IN ACCORDANCE WITH THE DESIGN CRITERIA REFERENCES. — 1.0
     - 11. BUILDING SITE IS IN A WIND-BORNE DEBRIS REGION AND ALL GLAZINGED OPENINGS MUST BE IMPACT-PROTECTED OR IMPACT-RESISTANT.

GENERAL NOTES (CONTINUED):

D. SEISMIC DESIGN DATA:
   - 1. RISK CATEGORY — II
   - 2. SEISMIC IMPORTANCE FACTOR — 1.0
   - 3. SS — (SITE SPECIFIC SDS VALUES)
   - 4. S1 — (SITE SPECIFIC SDI VALUES)
   - 5. SITE CLASS — F
   - 6. SDS — 0.435g
   - 7. SD1 — 0.251g
   - 8. SEISMIC DESIGN CATEGORY — D
   - 9. DESIGN BASE SHEAR — 89 KIPS
   - 10. SEISMIC RESPONSE COEFFICIENT — 0.09
   - 11. SEISMIC SHEAR ON PILES — 464 KIPS
   - 12. RESPONSE MODIFICATION FACTOR — 5.0
   - 13. REDUNDANCY FACTOR — 1.0
   - 14. ANALYSIS PROCEDURE EQUIVALENT LATERAL FORCE
   - 15. BASIC SEISMIC-FORCE-RESISTING SYSTEM IS INTERMEDIATE REINFORCED PRECAST CONCRETE SHEAR WALLS AND REINFORCED MASONRY SHEARWALLS.

E. RAIN DESIGN DATA:
   - 1. 100 YEAR (1 HOUR RAIN FALL) — 4.25 INCHES

10. MECHANICAL UNIT WEIGHTS AND LOCATIONS ARE APPROXIMATE. CONTRACTOR MUST VERIFY LOCATIONS AND WEIGHTS SHOWN AND REPORT DISCREPANCIES TO THE ARCHITECT.

11. DESIGN CRITERIA SERVICEABILITY LIMITS:
    - A. ROOF DEFLECTIONS:
      - 1. LIVE LOAD — L/360
      - 2. TOTAL LOAD — L/240
    - B. LATERAL DRIFT — H/480
    - C. LATERAL (OUT OF PLANE) — L/240
    - D. WIND LOADS WERE TAKEN AS 0.42 TIMES THE WIND PRESSURE FOR DETERMINING DEFLECTION LIMITS

12. THE BUILDING HAS AN OCCUPANCY DESIGNATION OF INHABITED AND REQUIRES A VERY LOW LEVEL OF PROTECTION. THE BUILDING HAS BEEN DESIGNED IN ACCORDANCE WITH UFC 4-010-01 ANTITERRORISM PROVISIONS.

13. THE FIRST FLOOR IS A STRUCTURAL SLAB. ALL UTILITIES MUST BE SUPPORTED FROM THE SLAB AND UTILITIES MUST HAVE FLEXIBLE CONNECTIONS AS THE UTILITY ENTERS THE BUILDING. REFER TO OTHER DISCIPLINES DRAWINGS FOR SUPPORT DETAILS. AT LOCATIONS WHERE UTILITIES ENTER THE BUILDING, THE PENETRATION THROUGH THE FOUNDATION WALLS, PRECAST WALLS AND TURNDOWN SLAB EDGES MUST BE 6" LARGER THAN THE UTILITY TO ALLOW 6" OF SPACE BELOW THE UTILITY.

FOUNDATION NOTES:

1. FOUNDATIONS HAVE BEEN DESIGNED IN ACCORDANCE WITH THE RECOMMENDATIONS IN THE GEOTECHNICAL EXPLORATION REPORT PREPARED BY TERRACON CONSULTANTS, INC. DATED DECEMBER 22, 2021.

2. PRIOR TO PLACING FOUNDATION CONCRETE, ALL FOUNDATION EXCAVATIONS MUST BE INSPECTED BY THE GEOTECHNICAL ENGINEER TO EXPLORE THE EXTENT OF LOOSE, SOFT OR OTHERWISE UNSATISFACTORY SOIL MATERIAL. THE GEOTECHNICAL ENGINEER WILL REPORT UNSUITABLE CONDITIONS TO THE CONTRACTING OFFICER AND THE CONTRACTING OFFICER WILL PROVIDE DIRECTION FOR CORRECTIVE ACTION WHERE REQUIRED.

3. NO UNBALANCED BACKFILLING MAY BE DONE AGAINST WALLS UNLESS WALLS ARE SECURELY BRACED AGAINST OVERTURNING, EITHER BY TEMPORARY CONSTRUCTION BRACING OR BY PERMANENT CONSTRUCTION.

DRIVEN PILE NOTES:

1. PILING MUST COMPLY WITH PRECAST CONCRETE INSTITUTE MNL-116 AND SECTIONS 1808 AND 1810 OF THE 2018 INTERNATIONAL BUILDING CODE. PILING MUST BE 14 INCH SQUARE PRECAST, PRESTRESSED CONCRETE SECTIONS.

2. PILE FOUNDATIONS HAVE BEEN DESIGNED IN ACCORDANCE WITH THE RECOMMENDATIONS IN THE GEOTECHNICAL EXPLORATION REPORT PREPARED BY TERRACON CONSULTANTS, INC. DATED DECEMBER 22, 2021.

3. CONCRETE MUST BE NORMAL WEIGHT AND MUST OBTAIN 28 DAY COMPRESSIVE STRENGTH OF 7,000 PSI.

4. ALLOWABLE (UNLESS OTHERWISE NOTED) DESIGN CAPACITIES ARE AS FOLLOWS (SEE A3/OSB501 'PILE DESIGN CRITERIA' FOR ADDITIONAL INFORMATION):
   - A. COMPRESSION — 80 TONS
   - B. TENSION — 55 TONS
   - C. LATERAL (ULTIMATE FOR FREE HEAD CONNECTION) — 4.5 TONS
   - D. ULTIMATE DRIVING RESISTANCE — 215 TONS
   - E. DRIVING RESISTANCE IS BASED ON A FACTOR OF SAFETY OF 2.0 AND A 53 KIP ALLOWANCE FOR DOWNDRAG.

5. BASE BID ON DRIVING ALL PILES, EXCEPT TEST PILES, TO AN ACTUAL TIP ELEVATION OF -45 FEET.

6. THE CONTRACTOR MUST DRIVE 4 - 80 FOOT LONG TEST PILES IN LOCATIONS SHOWN ON THE FOUNDATION PLANS. TEST PILE LOCATOINS MAY BE RELOCATED TO DIFFERENT PILES IF APPROVED BY THE CONTRACTING OFFICER.

DRIVEN PILE NOTES: (CONTINUED):

7. TEST PILES SHOWN ON PLANS MUST BE TESTED USING PILE DRIVING ANALYZER (PDA) TO MEASURE DRIVING STRESSES, EVALUATE HAMMER PERFORMANCE AND VERIFY PILE CAPACITIES. THE LOAD TESTS MUST BE DONE IN ACCORDANCE WITH THE SPECIFICATIONS AND UNDER THE DIRECTION OF THE GEOTECHNICAL ENGINEER.

8. THE GENERAL CONTRACTOR MUST PROVIDE AN AS-INSTALLED PILE DRAWING FOR EACH PILE WITH PILE LOCATION DISCREPANCIES NOTED ON THE DRAWING.

9. EXISTING BUILDINGS ON THE SITE ARE PILE SUPPORTED AND GEOTHERMAL WELLS EXIST BENEATH THE EXISTING PARKING LOTS. EXISTING PILES AND GEOTHERMAL WELLS WILL REMAIN AND BE CUT OFF 2'-0" BELOW BUILDING SLAB AND NEW FOUNDATIONS. NEW PILES MUST BE PLACED 14" CLEAR FROM THE EXISTING PILES AND WELLS. THE EXACT LOCATION OF THE EXISTING PILES AND WELLS ARE UNKNOWN. THE EXISTING PILE AND WELLS MUST BE EXPOSED AND LOCATED DURING CONSTRUCTION. IN ORDER TO MAINTAIN THE 14" CLEARANCE BETWEEN NEW AND EXISTING, THE NEW PILES MUST BE FIELD ADJUSTED DURING PILE INSTALLATION. THE PROCESS FOR THIS FIELD ADJUSTMENT WILL BE TO UNCOVER THE EXISTING PILES AND WELLS. SURVEY THE LOCATION OF THE PILES AND WELLS AND SUBMIT THE SURVEY TO THE STRUCTURAL ENGINEER. THE STRUCTURAL ENGINEER WILL EVALUATE THE REQUIRED LOCATION OF NEW PILES RELATIVE TO THE EXISTING PILES AND WELLS AND PROVIDE DIRECTION TO THE CONTRACTOR ON WHERE TO DRIVE THE NEW PILES. AFTER THE EVALUATION OF EXISTING CONDITIONS AND FOUNDATION REDESIGN, THE STRUCTURAL ENGINEER WILL PROVIDE DIRECTION ON WHICH PILES NEED TO BE RELOCATED. THE REVIEW AND REDESIGN TIME FOR EACH SURVEY SUBMITTAL IS 30 DAYS.

10. PILING MUST BE DRIVEN TO A MAXIMUM TOLERANCE IN ANY DIRECTION OF THREE INCHES PER PILE. WHERE AN INDIVIDUAL PILE IS DRIVEN OUT OF POSITION MORE THAN THREE INCHES IN ANY DIRECTION AND/OR WHERE THE CENTER OF GRAVITY OF A PILE GROUP IS OUT OF POSITION MORE THAN TWO INCHES, THE CONTRACTOR MAY BE REQUIRED TO DRIVE AN ADDITONAL PILE OR PILES TO COMPENSATE FOR THE ECCENTRICITY OF THE PILE AND/OR PILE GROUP.

CAST-IN-PLACE CONCRETE NOTES:

1. CAST-IN-PLACE CONCRETE HAS BEEN DESIGNED IN ACCORDANCE WITH THE AMERICAN CONCRETE INSTITUTE (ACI) "BUILDING CODE REQUIREMENTS FOR STRUCTURAL CONCRETE (ACI 318-14) AND COMMENTARY (ACI 318R-14)".

2. CONCRETE MUST BE NORMAL WEIGHT AND MUST OBTAIN 28 DAY COMPRESSIVE STRENGTH OF 5,000 PSI.

3. REINFORCING MATERIALS MUST BE AS FOLLOWS:
   - A. REINFORCING BARS - ASTM A615, GRADE 60, DEFORMED

4. ALL REINFORCING STEEL AND EMBEDDED ITEMS MUST BE ACCURATELY PLACED IN THE POSITIONS SHOWN AND ADEQUATELY TIED AND SUPPORTED BEFORE CONCRETE IS PLACED TO PREVENT DISPLACEMENT BEYOND PERMITTED TOLERANCES.

5. MINIMUM CONCRETE COVER FOR REINFORCING STEEL AS INDICATED ON THE DRAWINGS MUST GOVERN WHEN IN CONFLICT WITH ACI 318-14 TABLE 20.6.1.3.1.

PRECAST ARCHITECTURAL CONCRETE NOTES:

1. PRECAST CONCRETE MUST BE DESIGNED IN ACCORDANCE WITH THE AMERICAN CONCRETE INSTITUTE (ACI) "BUILDING CODE REQUIREMENTS FOR REINFORCED CONCRETE" ACI 318-14.

2. THE CONTRACTOR MUST SUBMIT SHOP DRAWINGS PREPARED BY A REGISTERED PROFESSIONAL ENGINEER FOR THE DESIGN OF STRUCTURAL PRECAST CONCRETE, INCLUDING DESIGN LOADINGS AND REACTIONS APPLIED TO THE SUPPORTING STRUCTURE.

3. CONNECTION DETAILS SHOWN ARE SCHEMATIC ONLY. ALL CONNECTIONS MUST BE DEVELOPED BY THE PRECAST MANUFACTURER TO SUIT THE SPECIFIED LOADS AND CONNECTIONS MUST ACCOUNT FOR THERMAL MOVEMENT AND CREEP OF PRECAST MEMBERS. DETAIL ALL CONNECTIONS ON SHOP DRAWINGS.

4. IN ADDITION TO THEIR OWN DEAD WEIGHT AND THE DEAD LOADS SHOWN, PRECAST MEMBERS MUST BE DESIGNED TO SUPPORT THE LIVE LOADS INDICATED IN THE GENERAL NOTES.

5. CONCRETE MUST BE NORMAL WEIGHT AND MUST OBTAIN A 28 DAY COMPRESSIVE STRENGTH OF 5,000 PSI.

6. REINFORCING MATERIALS MUST BE AS FOLLOWS:
   - A. REINFORCING BARS: ASTM A615, GRADE 60, DEFORMED
   - B. WELDED WIRE REINFORCMENT: ASTM A185

7. PRESTRESSING TENDONS MUST COMPLY WITH ASTM A416 GRADE 270, UNCOATED, 7-WIRE STRESS-RELIEVED STRAND.

CONCRETE MASONRY NOTES:

1. CONCRETE MASONRY HAS BEEN DESIGNED IN ACCORDANCE WITH THE AMERICAN CONCRETE INSTITUTE (ACI) "BUILDING CODE REQUIREMENTS AND SPECIFICATIONS FOR MASONRY STRUCTURES" TMS 402/602 - 16.

2. CONCRETE MASONRY CONSTRUCTION MUST CONFORM TO THE "BUILDING CODE REQUIREMENTS AND SPECIFICATIONS FOR MASONRY STRUCTURES" TMS 402/602-16.

3. CONCRETE MASONRY UNITS MUST CONFORM TO ASTM C90 AND BE MADE WITH LIGHTWEIGHT OR NORMAL WEIGHT AGGREGATE. THE COMPRESSIVE STRENGTH OF MASONRY, F'm, EXPRESSED AS FORCE PER UNIT OF NET CROSS-SECTIONAL AREA, MUST BE 2,000 PSI AT 28 DAYS.

4. REINFORCING STEEL MUST COMPLY WITH ASTM A615, GRADE 60. SHOP FABRICATE REINFORCING BARS SHOWN TO BE BENT OR HOOKED.

5. GROUT MUST COMPLY WITH ASTM C476, AND MUST BE PROPORTIONED TO OBTAIN A 28 DAY COMPRESSIVE STRENGTH OF 2,000 PSI.

6. MORTAR MUST COMPLY WITH ASTM C270, TYPE S OR M. AGGREGATE FOR MORTAR MUST COMPLY WITH ASTM C144. AGGREGATE FAILING TO COMPLY WITH ASTM C144 GRADATION REQUIREMENTS MAY BE USED PROVIDED THE MORTAR CAN BE PREPARED TO COMPLY WITH THE AGGREGATE RATIO, WATER RETENTION AND COMPRESSIVE STRENGTH REQUIREMENTS OF THE PROPERTY SPECIFICATIONS OF ASTM C270. USE TYPE M BELOW GRADE AND TYPE S ABOVE GRADE (UNLESS CELLS ARE GROUTED SOLID).

7. VERTICAL REINFORCING BARS MUST BE THE GIVEN SIZE AND SPACING SHOWN. LAP REINFORCING AT ALL SPLICES AS FOLLOWS:

A. #3 - 19"	D. #6 - 52"	G. #9 - 119"
B. #4 - 25"	E. #7 - 67"	H. #10 OR LARGER - 'MECHANICALLY SPLICED'
C. #5 - 31"	F. #8 - 93"	

8. REBAR DOWELS MUST BE THE SAME SIZE AND SPACING AS VERTICAL REINFORCING FROM FOUNDATION. DOWELS MUST HAVE STANDARD ACI HOOKS.

9. DISCONTINUE ALL HORIZONTAL REINFORCING AT CONTROL JOINTS.

10. HORIZONTAL JOINT REINFORCING MUST BE W2.8 x W2.8 LADDER TYPE IN CMU SHEARWALLS AT 8" ON-CENTER. JOINT REINFORCING MUST COMPLY WITH ASTM A951 AND MUST BE HOT-DIPPED GALVANIZED ACCORDING TO ASTM A153, CLASS B.

11. GROUT ALL CELLS SOLID BELOW FINISHED FIRST FLOOR.

12. VERTICAL REINFORCING MUST HAVE BAR POSITIONERS AT SPACING NOT TO EXCEED 200 BAR DIAMETERS, AT GROUT LIFT HEIGHTS OR BAR SPLICE LOCATIONS, WHICHEVER IS LESS.

13. ALL CONCRETE MASONRY WALLS INDICATED ON THE STRUCTURAL DRAWINGS ARE MASONRY SHEAR WALLS AND ARE PART OF THE SEISMIC FORCE RESISTING SYSTEM (SFRS).

14. NON-LOAD BEARING MASONRY WALLS ARE INDICATED ON THE ARCHITECTURAL DRAWINGS AND MUST BE REINFORCED WITH #4 AT 48" ON-CENTER VERTICAL WALL REINFORCEMENT.

15. REFER TO THE PARTITION TYPES ON THE ARCHITECTURAL DRAWINGS FOR CONCRETE MASONRY WALLS THAT MUST BE GROUTED SOLID.

STRUCTURAL STEEL NOTES:

1. STRUCTURAL STEEL HAS BEEN DESIGNED IN ACCORDANCE WITH THE FOURTEENTH EDITION OF THE AMERICAN INSTITUTE OF STEEL CONSTRUCTION (AISC 360-10) "STEEL CONSTRUCTION MANUAL" - LOAD & RESISTANCE FACTOR DESIGN.

2. STRUCTURAL STEEL MUST COMPLY WITH THE FOLLOWING SPECIFICATIONS:
   - A. STRUCTURAL STEEL W- AND WT-SHAPES - ASTM A992, Fy=50 KSI
   - B. RECTANGULAR AND SQUARE HSS - ASTM A500, GRADE C, Fy=50 KSI
   - C. ANCHOR RODS - ASTM F1554, GRADE 36
   - D. ALL OTHER STRUCTURAL STEEL SHAPES, PLATES AND BARS - ASTM A36, Fy=36 KSI (UNLESS OTHERWISE NOTED)

3. UNLESS OTHERWISE NOTED, ALL BEAM CONNECTIONS MUST BE ACCORDING TO "TYPICAL BOLTED WEB PLATE CONNECTION DETAILS" ON SHEET OSF502 USING ASTM A325 BOLTS.

4. HIGH STRENGTH BOLTS MUST BE FULLY PRE-TENSIONED.

5. WELDING MUST BE IN ACCORDANCE WITH AWS D1.1, "STRUCTURAL WELDING CODE - STEEL". WELD ELECTRODES MUST BE E70XX. CONTINUOUS 3/16" FILLET WELDS ARE REQUIRED UNLESS OTHERWISE NOTED.

6. SEE THE ARCHITECTURAL, CIVIL, MECHANICAL, PLUMBING AND ELECTRICAL DRAWINGS FOR ADDITIONAL STEEL (IF ANY) NOT SHOWN ON THE STRUCTURAL DRAWINGS.

7. UNLESS OTHERWISE NOTED, THE TOP OF ALL STEEL COLUMNS MUST HAVE A STEEL CAP PLATE. UNLESS OTHERWISE DETAILED OR NOTED, MINIMUM CAP PLATE DIMENSIONS MUST MATCH COLUMN WIDTH AND DEPTH AND MINIMUM THICKNESS OF CAP PLATE MUST EQUAL COLUMN WEB THICKNESS (1/2" MIN).

8. STRUCTURAL STEEL NOTED TO BE GALVANIZED MUST CONFORM TO ASTM A123 OR ASTM A153. GALVANIZE STRUCTURAL STEEL AFTER FABRICATION WHERE PRACTICAL. REPAIR DAMAGED GALVANIZED COATING USING ASTM A780 ZINC-RICH PAINT.

NOTE:
IF THIS DRAWING IS LESS THAN 34" X 22"
IT IS A REDUCED SIZE DRAWING

SPEIGHT·MARSHALL·FRANCIS
STRUCTURAL ENGINEERS
1228 PERIMETER PARKWAY, SUITE 201
VIRGINIA BEACH, VIRGINIA 23454
P: 757.427.1020
7814 CAROUSEL LANE SUITE 200
RICHMOND, VIRGINIA 23294
P: 804.464.4111
WWW.SMANDF.CO
SM&F Job No: 20.009-B

STM	DESCRIPTION	DATE	APPR
	MOD P00006 AND MOD P00007	10/2025	
	MOD P00005	05/2023	

NAVFAC

COMMONWEALTH OF VIRGINIA
EARL H. INGE, JR.
Lic. No. 035522
1/13/2023
PROFESSIONAL ENGINEER

BAMFORTH ENGINEERS + SURVEYORS

AE INFO

APPROVED
FOR COMMANDER NAVFAC 11/21/2022

ACTIVITY: Approved by J. Scott Roberts, Asset Management Branch Head & Supervisory Facility Planner, PWD Beaufort, SC via email.

SATISFACTORY TO DATE	12/15/2022
DES EHI / DRW SEC / CHK DWS	
PM/DM	KTB / RLH
BRANCH MANAGER	NEK
CHIEF ENG/ARCH	EJA
FP ENGINEER	DSN

NAVAL FACILITIES ENGINEERING SYSTEMS COMMAND
NAVAL FACILITIES ENGINEERING SYSTEMS COMMAND – MID-ATLANTIC
NORFOLK, VA
DEPARTMENT OF THE NAVY
DC CORE
BEAUFORT, SC
MCAS BEAUFORT
P-475 AIRCRAFT MAINTENANCE HANGAR - VOLUME 3 (OSF OPTION)
STRUCTURAL NOTES

SCALE:	12" = 1'-0"
EPROJECT NO.:	1363603
CONSTR. CONTR. NO.	
NAVFAC DRAWING NO.	12860108
SHEET	907 OF 1412

OS-001

DRAWFORM REVISION: 25 AUGUST 2020

Autodesk Docs://0042 \ MFAT 100 F35 Maintenance Hangar/BLDG F475_OSF 1363603-5.rvt
11/11/2025 6:58:46 PM

STEEL JOIST NOTES:

1. STEEL JOISTS MUST CONFORM TO THE LATEST EDITION OF THE STEEL JOIST INSTITUTE (SJI) STANDARD SPECIFICATIONS.

2. PREPARE AND SUBMIT FOR REVIEW SHOP DRAWINGS SHOWING THE LAYOUT OF JOIST MEMBERS, SPECIAL CONNECTIONS, JOINING AND ACCESSORIES. INCLUDE MARK, NUMBER, TYPE, LOCATION AND SPACING OF JOISTS AND BRIDGING.

3. THE JOIST MANUFACTURER MUST BE RESPONSIBLE FOR CONTINUOUS JOIST BRIDGING LINES SATISFYING THE REQUIREMENTS OF THE SJI SPECIFICATION FOR THE TOP AND BOTTOM CHORDS OF ALL STEEL JOISTS, AS WELL AS ANY ADDITIONAL BRIDGING/BRACING SHOWN OR REQUIRED FOR JOISTS SUBJECTED TO NET UPLIFT OR OTHER SPECIAL LOADS. ALL REQUIRED JOIST BRIDGING MUST BE CLEARLY INDICATED ON THE SHOP DRAWINGS. CROSS-BRIDGING IS REQUIRED AT CHANGES OF JOIST DEPTHS AND ENDS OF ALL BRIDGING LINES, UNLESS SUCH ENDS ARE PROPERLY ANCHORED INTO INTERSECTING INTERIOR OR END WALLS. ALL BRIDGING AND BRIDGING ANCHORS MUST BE COMPLETELY INSTALLED BEFORE PLACING OF ANY CONSTRUCTION LOADS ON THE JOISTS.

4. ROOF JOISTS MUST BE DESIGNED FOR A UPLIFT LOAD INDICATED IN THE 'COMPONENT AND CLADDING DESIGN PRESSURES' TABLE AND 'COMPONENT AND CLADDING LEGEND' SHOWN ON THIS SHEET. TO OBTAIN THE NET UPLIFT VALUE USE MAXIMUM DEAD LOAD OF 5 PSF.

5. ONE-THIRD STRESS INCREASE NOT PERMITTED FOR LOAD COMBINATIONS INVOLVING WIND PER IBC SECTION 1605.3.1.1.

6. WHERE JOIST SPAN EQUALS 40 FEET OR GREATER JOIST MUST BE ERECTION BOLTED TO STEEL BEAMS, UNLESS PANELIZED JOIST ERECTION IS EMPLOYED. GENERAL CONTRACTOR MUST COORDINATE BOLT HOLE LOCATIONS REQUIRED IN STRUCTURAL STEEL MEMBERS.

7. CONCENTRATED LOADS NOT LOCATED AT JOIST PANEL POINTS MUST BE REINFORCED PER 'TYPICAL DETAIL AT CONCENTRATED LOADS ON JOISTS'.

8. UNLESS OTHERWISE NOTED, JOIST SEAT DEPTHS MUST BE 4".

9. ALL JOISTS ARE SPECIAL JOISTS AND THE JOIST MANUFACTURER MUST SUBMIT SIGNED AND SIGNED CALCULATIONS FOR DESIGN OF JOIST. IN ADDITION TO STEEL JOIST INSTITUTE (SJI) DESIGN CRITERIA, ALL JOIST MUST BE DESIGNED FOR THE FOLLOWING LOAD CRITERIA:
   A. UNIFORM LOAD INDICATED BY STEEL JOIST INSTITUTE (SJI) DESIGNATION.
   B. A LOAD COMBINATION OF TOTAL UNIFORM LOAD AND A SEISMIC AXIAL LOAD OF 1,600 POUNDS.

STEEL DECK NOTES:

1. STEEL DECK MUST CONFORM TO THE LATEST EDITION OF THE AMERICAN IRON AND STEEL INSTITUTE (AISI), "SPECIFICATION FOR THE DESIGN OF COLD-FORMED STEEL STRUCTURAL MEMBERS" AND THE STEEL DECK INSTITUTE (SDI), "DESIGN MANUAL FOR COMPOSITE DECKS, FORM DECKS, AND ROOF DECKS."

2. STEEL DECK UNITS MUST COMPLY WITH THE FOLLOWING:
   A. 1 1/2" ROOF DECK MUST BE 20 GAGE GALVANIZED TYPE B RIB DECK SPANNING PERPENDICULAR TO SUPPORTS UNLESS OTHERWISE NOTED. ATTACH DECK TO STRUCTURAL STEEL SUPPORTS WITH 5/8" DIAMETER PUDDLE WELDS AT EVERY RIB, INCLUDING RIBS WHERE SIDELAPS OCCUR. FASTEN ADJACENT DECK UNITS WITH #12 SELF-TAPPING HEX HEAD SCREWS AT 1/3 POINTS BETWEEN SUPPORTS ALONG SIDELAPS AND FASTEN EDGEMOST DECK PANEL TO STEEL FRAMING WITH 5/8" DIAMETER PUDDLE WELDS AT SAME SPACING AS SIDELAP FASTENERS.

3. WELDING MUST BE IN ACCORDANCE WITH AWS D1.3 "STRUCTURAL WELDING CODE - SHEET STEEL". FIELD WELDS MUST BE WIRE BRUSHED AND PAINTED WITH ZINC RICH PAINT.

4. DECK OPENINGS MEASURING GREATER THAN 12" ON ANY SIDE MUST HAVE SUPPORTS ON ALL SIDES OF OPENING. SUPPORTS MUST SPAN BETWEEN ADJACENT BEAMS OR JOISTS ON TWO SIDES. UNLESS OTHERWISE NOTED OR DETAILED ON THE DRAWINGS, USE 5x5x5/16" ANGLES FOR SPANS EXCEEDING 6'-0" AND 3x3x1/4" ANGLES FOR SPANS LESS THAN 6'-0". COORDINATE OPENING SIZES, LOCATIONS AND DETAILS WITH ARCHITECTURAL, MECHANICAL, PLUMBING AND ELECTRICAL DRAWINGS.

5. PERMANENT SUSPENDED LOADS SUCH AS SUSPENDED CEILINGS, LIGHT FIXTURES, DUCTS, OR OTHER UTILITIES MUST NOT BE SUPPORTED BY STEEL ROOF DECK.

6. DURING STEEL DECK ERECTION AND ROOFING, DISTRIBUTE CONSTRUCTION LOADS TO PREVENT DAMAGE TO DECK. CONCENTRATED CONSTRUCTION LOADS OF 200 POUNDS OR LESS DISTRIBUTED OVER A 1'-0" WIDE SECTION OF DECK MUST NOT REQUIRE ANY FURTHER DISTRIBUTION. USE WORKING PLATFORMS FOR CONCENTRATED CONSTRUCTION LOADS OF OVER 200 POUNDS, SUCH THAT THE RESULTING UNIFORM CONSTRUCTION LOAD ON THE DECK DOES NOT EXCEED 50 PSF.

7. PREPARE AND SUBMIT SHOP DRAWINGS FOR REVIEW SHOWING THE LAYOUT AND TYPES OF DECK UNITS, ANCHORAGE DETAILS AND CONDITIONS REQUIRING CLOSURE STRIPS, SUPPLEMENTARY FRAMING AND OTHER ACCESSORIES.

8. TOUCH-UP ALL SCARRED, ABRADED AND RUST AREAS IN STEEL DECK WITH ZINC RICH PAINT.

COLD-FORMED METAL FRAMING NOTES:

1. COLD-FORMED METAL FRAMING MUST BE DESIGNED IN ACCORDANCE WITH THE AMERICAN IRON AND STEEL INSTITUTE (AISI) "COLD-FORMED STEEL DESIGN MANUAL". THE CONTRACTOR MUST SUBMIT SHOP DRAWINGS PREPARED BY A REGISTERED PROFESSIONAL ENGINEER FOR THE DESIGN OF COLD-FORMED METAL FRAMING, INCLUDING DESIGN LOADINGS AND REACTIONS APPLIED TO THE SUPPORTING STRUCTURE.

2. COLD-FORMED METAL FRAMING MEMBERS MUST BE FORMED OF CORROSION-RESISTANT STEEL CONFORMING TO ASTM A653 WITH A MINIMUM YIELD STRENGTH OF 33 KSI FOR TRACKS AND RUNNERS AND (50 KSI FOR 54 MILS AND HEAVIER).

3. WELDING MUST BE IN ACCORDANCE WITH AWS D1.3, "STRUCTURAL WELDING CODE - SHEET STEEL".

4. COLD-FORMED METAL FRAMING MEMBERS MUST BE DESIGNED FOR THE LOADS GIVEN IN THE GENERAL NOTES. UNLESS OTHERWISE NOTED, THE DESIGN LOADS ARE UNFACTORED SERVICE LOADS; ALL APPLICABLE FACTORS MUST BE APPLIED.

5. MAXIMUM LATERAL DEFLECTION OF COLD-FORMED FRAMING MEMBERS MUST BE L/360.

6. COLD-FORMED METAL FRAMING MEMBERS MUST BE DESIGNED FOR ALL FRAMING CONDITIONS FOUND IN THE STRUCTURE, INCLUDING WALLS, CORNERS, HEADERS, JAMBS, EXTERIOR SOFFITS AND GUTTER SUPPORTS. SOME CONDITIONS MAY REQUIRE MODIFICATION OF COLD-FORMED FRAMING MEMBERS (SUCH AS NOTCHING OR REVISING SIZES) OR MULTIPLE STUDS TO SUPPORT INCREASED LOADS. IT IS THE RESPONSIBILITY OF THE CONTRACTOR TO COORDINATE ALL CONDITIONS AND DETAILS.

7. COLD-FORMED METAL FRAMING CONNECTIONS TO THE STRUCTURE MUST BE DESIGNED FOR ALL FRAMING CONDITIONS. CONNECTIONS ARE SCHEMATICALLY SHOWN ON THE STRUCTURAL DRAWINGS. IT IS THE RESPONSIBILITY OF THE CONTRACTOR TO COORDINATE ALL CONNECTION CONDITIONS AND LOCATIONS.

POST-INSTALLED ANCHOR NOTES:

1. POST-INSTALLED ANCHORS MUST BE CAPABLE OF WITHSTANDING DESIGN LOADS INDICATED ON THE DRAWINGS. APPLICABLE POST-INSTALLED ANCHOR TYPE(S) ARE AS FOLLOWS:
   A. ANCHORAGE TO CRACKED AND/OR UNCRACKED CONCRETE:
      1. ADHESIVE ANCHORS OR MECHANICAL ANCHORS, AS INDICATED
   B. REBAR DOWELING INTO CRACKED AND/OR UNCRACKED CONCRETE:
      1. ADHESIVE ANCHORS
   C. ANCHORAGE TO SOLID GROUTED MASONRY:
      1. ADHESIVE ANCHORS AS INDICATED

2. ANCHOR CAPACITY MUST BE BASED ON TECHNICAL DATA PUBLISHED BY THE ANCHOR MANUFACTURER OR SUCH OTHER METHOD AS APPROVED BY THE STRUCTURAL ENGINEER OF RECORD. CONTRACTOR MUST PROVIDE CALCULATIONS DEMONSTRATING THE CHOSEN ANCHOR IS CAPABLE OF ACHIEVING THE PERFORMANCE VALUES INDICATED. PRODUCTS SUBMITTED WILL BE EVALUATED BY SHOWING ICC ESR COMPLIANCE WITH THE RELEVANT BUILDING CODE FOR SEISMIC USES, LOAD RESISTANCE, INSTALLATION CATEGORY AND AVAILABILITY OF COMPREHENSIVE INSTALLATION INSTRUCTIONS. ADHESIVE ANCHOR EVALUATION WILL ALSO CONSIDER CREEP, IN-SERVICE TEMPERATURE AND INSTALLATION TEMPERATURE.

3. INSTALL ANCHORS PER THE MANUFACTURER INSTRUCTIONS INCLUDED IN ANCHOR PACKAGING.

4. OVERHEAD ADHESIVE ANCHORS MUST BE INSTALLED USING A PROPERLY TESTED AND APPROVED INSTALLATION METHOD.

5. THE CONTRACTOR MUST ARRANGE A REPRESENTATIVE OF THE ANCHOR MANUFACTURER TO PROVIDE ONSITE INSTALLATION TRAINING FOR ALL ANCHORING PRODUCTS. THE STRUCTURAL ENGINEER OF RECORD MUST RECEIVE DOCUMENTED CONFIRMATION THAT ALL OF THE CONTRACTOR'S PERSONNEL WHO INSTALL ANCHORS ARE TRAINED PRIOR TO THE COMMENCEMENT OF INSTALLING ANCHORS.

6. ANCHOR CAPACITY IS DEPENDENT UPON SPACING BETWEEN ADJACENT ANCHORS AND PROXIMITY OF ANCHORS TO EDGE OF CONCRETE. INSTALL ANCHORS IN ACCORDANCE WITH SPACING AND EDGE CLEARANCES INDICATED ON THE DRAWINGS.

7. EXISTING REINFORCING BARS IN THE CONCRETE STRUCTURE MAY CONFLICT WITH SPECIFIC ANCHOR LOCATIONS. UNLESS OTHERWISE NOTED, THE REINFORCING BARS CANNOT BE CUT. THE CONTRACTOR MUST REVIEW THE EXISTING STRUCTURAL DRAWINGS AND MUST LOCATE THE POSITION OF THE REINFORCING BARS AT THE LOCATIONS OF THE CONCRETE ANCHORS BY GPR X-RAY, CHIPPING OR OTHER MEANS.

DELEGATED DESIGN NOTES:

1. DESIGN RESPONSIBILITY FOR THE FOLLOWING ENGINEERED SYSTEMS AND COMPONENTS IS DELEGATED TO A QUALIFIED SPECIALTY STRUCTURAL ENGINEER RETAINED BY THE CONTRACTOR. THESE SYSTEMS AND COMPONENTS INCLUDE, BUT ARE NOT LIMITED TO:
   A. OPEN-WEB STEEL JOISTS
   B. PRECAST CONCRETE PILES
   C. PRECAST CONCRETE WALL PANELS
   D. COLD-FORMED METAL

2. DELEGATED ENGINEERED SYSTEMS AND COMPONENTS MUST SATISFY ASCE 7-16 AND REQUIREMENTS OF APPLICABLE MATERIAL-SPECIFIC STANDARDS.

3. COORDINATE WITH THE CONTRACT DOCUMENTS FOR PROFESSIONAL LICENSURE AND SEALING REQUIREMENTS, DESIGN CRITERIA, DETAILS OF THE SYSTEM/COMPONENT INTERFACE WITH THE PRIMARY STRUCTURE AND SUBMITTAL AND CALCULATION REQUIREMENTS.

4. DO NOT FABRICATE OR INSTALL DELEGATED DESIGN ITEMS UNTIL SUBMITTED DELEGATED DESIGN DOCUMENTS HAVE BEEN REVIEWED FOR COMPLIANCE BY THE ARCHITECT AND STRUCTURAL ENGINEER OF RECORD.

5. SEE THE ARCHITECTURAL, CIVIL, MECHANICAL, PLUMBING AND ELECTRICAL DRAWINGS AND THE SPECIFICATIONS FOR ADDITIONAL DELEGATED DESIGN REQUIREMENTS (IF ANY) NOT SHOWN ON THE STRUCTURAL DRAWINGS.

COMPONENTS AND CLADDING DESIGN PRESSURES (PSF)

ROOF ZONE	TRIBUTARY AREA (SQ. FT.)					
	10		50		250	
1	+17.4	-46.3	+16.0	-46.3	+16.0	-46.3
2	+17.4	-53.5	+16.0	-51.0	+16.0	-49.9
3	+17.4	-71.6	+16.0	-56.4	+16.0	-49.9
WALL ZONE	**TRIBUTARY AREA (SQ. FT.)**					
	10		50		250	
4	+39.0	-42.3	+35.0	-38.3	+31.0	-34.3
5	+39.0	-52.1	+35.0	-44.0	+31.0	-36.0

NOTES:
1. PLUS AND MINUS SIGNS SIGNIFY PRESSURES ACTING TOWARD OR AWAY FROM THE SURFACES, RESPECTIVELY.
2. WIDTH OF COEFFICIENT PRESSURE ZONE, a = 13 FEET. SEE 'COMPONENT AND CLADDING LEGEND' ON THIS SHEET FOR LOCATIONS.
3. ALL WIND PRESSURES ARE ULTIMATE LOADS. FOR SERVICE LOAD PRESSURES, MULTIPLY THE ABOVE VALUES BY 0.6 PER ASCE 7-16.

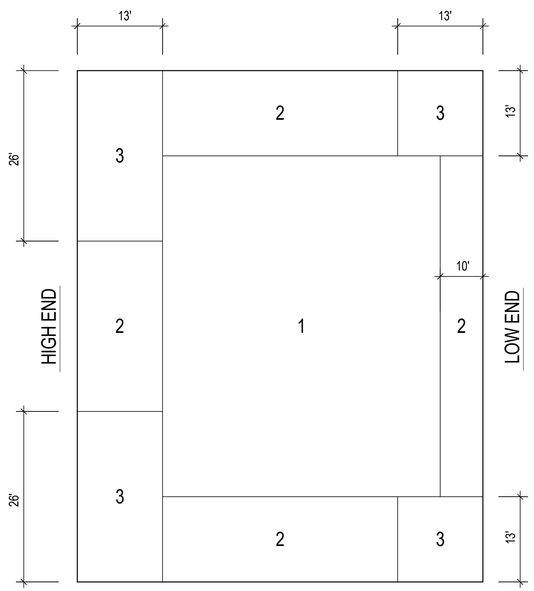

TYPICAL UNIT PLAN

COMPONENT AND CLADDING LEGEND

STRUCTURAL ABBREVIATION LIST:

±	PLUS/MINUS
Ø	DIAMETER
CL	CENTERLINE
o/c	ON CENTER
A.B.	ANCHOR BOLT
AESS	ARCHITECTURALLY EXPOSED STRUCTURAL STEEL
ACI	AMERICAN CONCRETE INSTITUTE
AISC	AMERICAN INSTITUTE OF STEEL CONSTRUCTION
A.R.	ANCHOR ROD
ASTM	AMERICAN SOCIETY FOR TESTING AND MATERIALS
ADJ.	ADJACENT
ARCH.	ARCHITECT or ARCHITECTURAL
B.	BOTTOM
B.E.J.	BUILDING EXPANSION JOINT
B.D.	BAR DIAMETER
BLDG.	BUILDING
BRCG.	BRACING
BRDG.	BRIDGING
BRG.	BEARING
BTWN.	BETWEEN
C.G.	CENTER OF GRAVITY
C.I.P.	CAST IN PLACE
C.J.P.	COMPLETE JOINT PENETRATION
CANT.	CANTILEVER
CMU	CONCRETE MASONRY UNIT
COL.	COLUMN
CONC.	CONCRETE
CONN.	CONNECT or CONNECTION
CONT.	CONTINUOUS
COORD.	COORDINATE
DBL.	DOUBLE
DET.	DETAIL
DIA.	DIAMETER
DIAG.	DIAGONAL
DWG.	DRAWING
E.F.	EACH FACE
E.O.	EDGE OF
E.W.	EACH WAY
EL.	ELEVATION
ELEC.	ELECTRICAL
ELEV.	ELEVATOR or ELEVATION
EMB.	EMBED or EMBEDMENT
ENG.	ENGINEER
EQUIV.	EQUIVALENT
EXIST.	EXISTING
EXP.	EXPANSION
F.L.	FULL LENGTH
F.O.	FACE OF
F.R.	FIRST RISER
FIN.	FINISH or FINISHED
FTG.	FOOTING
G.C.	GENERAL CONTRACTOR
GALV.	GALVANIZED
H.C.	HOLLOW CORE
HORIZ.	HORIZONTAL
J.B.E.	JOIST BEARING ELEVATION
K.S.F.	KIPS PER SQUARE FOOT
K.S.I.	KIPS PER SQUARE INCH
LLH	LONG LEG HORIZONTAL
LLO	LONG LEG OUTSTANDING
LLV	LONG LEG VERTICAL
LSH	LONG SIDE HORIZONTAL
LSV	LONG SIDE VERTICAL
M.O.S.	MIDDLE OF SLAB
M.O.W.	MIDDLE OF WALL
MANUF.	MANUFACTURER or MANUFACTURER'S
MAS.	MASONRY
MATL.	MATERIAL
MAX.	MAXIMUM
MECH.	MECHANICAL
MIN.	MINIMUM
N.T.S.	NOT TO SCALE
OSB	ORIENTED STRAND BOARD
OPP.	OPPOSITE
P/T	POST-TENSIONED
PAF	POWDER ACTUATED FASTENER
P.C.	PRECAST
PEB	PRE-ENGINEERED BUILDING
PLF	POUNDS PER LINEAR FOOT
P.S.	PRE-STRESSED
PSF	POUNDS PER SQUARE FOOT
PSI	POUNDS PER SQUARE INCH
P.T.	PRESSURE TREATED
PLUMB.	PLUMBING
PROJ.	PROJECTION
R.	RADIUS
REF.	REFERENCE
REINF.	REINFORCED or REINFORCING
REQD.	REQUIRED
REV.	REVISION
SLO	SHORT LEG OUTSTANDING
S.D.I.	STEEL DECK INSTITUTE
S.E.J.	SEISMIC EXPANSION JOINT
S.J.I.	STEEL JOIST INSTITUTE
S.O.G.	SLAB-ON-GRADE
S.F.	STEPPED FOOTING
SFRS	SEISMIC FORCE RESISTING SYSTEM
SCHED.	SCHEDULE
SECT.	SECTION
SIM.	SIMILAR
S.I.R.D.A.	SLOPED INTEGRAL ROOF DECK ASSEMBLY
STD.	STANDARD
STIFF.	STIFFENER
STIR.	STIRRUP
STRUCT.	STRUCTURAL
SQ.	SQUARE
T.O.S.	TOP OF STEEL
TEMP.	TEMPERATURE
TYP.	TYPICAL
U.O.N.	UNLESS OTHERWISE NOTED
VERT.	VERTICAL
W.P.	WORKING POINT
W.W.R.	WELDED WIRE REINFORCEMENT

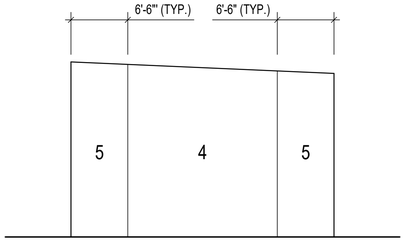

TYPICAL SIDE WALL

SPEIGHT·MARSHALL·FRANCIS
STRUCTURAL ENGINEERS
1228 PERIMETER PARKWAY, SUITE 201
VIRGINIA BEACH, VIRGINIA 23454
P: 757.427.1020
7814 CAROUSEL LANE SUITE 200
RICHMOND, VIRGINIA 23294
P: 804.464.4111
WWW.SMANDF.CO
SM&F Job No: 20.008-B

NOTE:
IF THIS DRAWING IS LESS THAN 34" X 22"
IT IS A REDUCED SIZE DRAWING

STM	DESCRIPTION	DATE	APPR
	MOD P00006 AND MOD P00007	10/2025	
	MOD P00005	05/2023	

NAVFAC

COMMONWEALTH OF VIRGINIA
EARL H. INGE, JR.
Lic. No. 035522
1/13/2023
PROFESSIONAL ENGINEER

BAMFORTH ENGINEERS + SURVEYORS

AE INFO

APPROVED
FOR COMMANDER NAVFAC

ACTIVITY: Approved by J. Scott Roberts, Asset Management Branch Head & Supervisory Facility Planner, PWD Beaufort, SC via email.

SATISFACTORY TO DATE: 12/15/2022

DES	EHI	DRW	SEC	CHK	DWS
PM/DM	KTB / RLH				
BRANCH MANAGER	NEK				
CHIEF ENG/ARCH	EJA				
FP ENGINEER	DSN				

DEPARTMENT OF THE NAVY
NAVAL FACILITIES ENGINEERING SYSTEMS COMMAND
NAVAL FACILITIES ENGINEERING SYSTEMS COMMAND ~ MID-ATLANTIC
NORFOLK, VA
DC CODE:
MCAS BEAUFORT
BEAUFORT, SC
P-475 AIRCRAFT MAINTENANCE HANGAR - VOLUME 3 (OSF OPTION)
STRUCTURAL NOTES AND ABBREVIATIONS

SCALE: 12" = 1'-0"
EPROJECT NO.: 1363603
CONSTR. CONTR. NO.
NAVFAC DRAWING NO. 12860109
SHEET 908 OF 1412
OS-002

DRAWFORM REVISION: 25 AUGUST 2020

Autodesk Docs://0042 \MF-AT 000 F35 Maintenance Hangar/BLDG F475_OSF 1363603.rvt
11/11/2025 6:46:46 PM

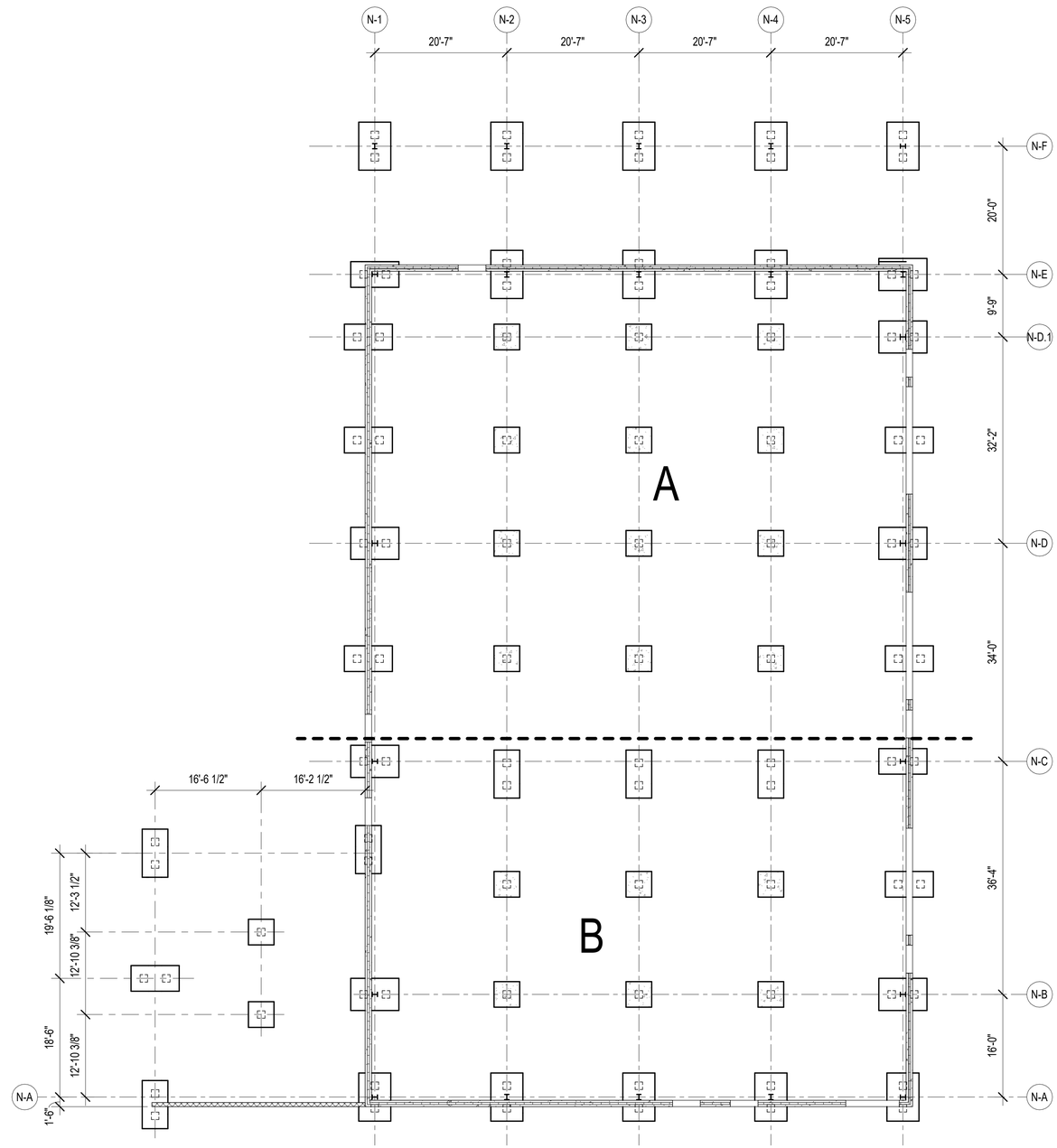

A1 DIMENSION PLAN - FOUNDATION - OVERALL

3/32" = 1'-0"

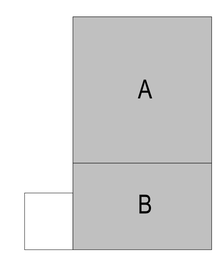

KEYPLAN

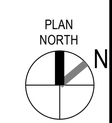

0 5' 10' 20' 30' 40'

3/32" = 1'-0" GRAPHIC SCALE

NOTE:
IF THIS DRAWING IS LESS THAN 34" X 22"
IT IS A REDUCED SIZE DRAWING

SPEIGHT·MARSHALL·FRANCIS
STRUCTURAL ENGINEERS
1228 PERIMETER PARKWAY, SUITE 201
VIRGINIA BEACH, VIRGINIA 23454
P: 757 427.1020
7814 CAROUSEL LANE SUITE 200
RICHMOND, VIRGINIA 23294
P: 804.464.4111
WWW.SMANDF.CO
SMAF Job No: 20.009-B

STM	DESCRIPTION	DATE	APPR
	MOD P00006 AND MOD P00007	10/2025	
	MOD P00005	05/2023	

NAVFAC

COMMONWEALTH OF VIRGINIA
EARL H. INGE, JR.
Lic. No. 035522
1/13/2023
PROFESSIONAL ENGINEER

BAMFORTH
ENGINEERS + SURVEYORS

AE INFO

APPROVED

FOR COMMANDER NAVFAC

ACTIVITY
Approved by J. Scott Roberts,
Asset Management Branch Head &
Supervisory Facility Planner, PWD
Beaufort, SC via email.

SATISFACTORY TO DATE	12/15/2022
DES EHI / DRW SEC / CHK DWS	
PMDM	KTB / RLH
BRANCH MANAGER	NEK
CHIEF ENG/ARCH	EJA
FP ENGINEER	DSN

DEPARTMENT OF THE NAVY
NAVAL FACILITIES ENGINEERING SYSTEMS COMMAND
NAVAL FACILITIES ENGINEERING SYSTEMS COMMAND ~ MID-ATLANTIC
NORFOLK, VA
DC CORE:
MCAS BEAUFORT
BEAUFORT, SC
P-475 AIRCRAFT MAINTENANCE HANGAR - VOLUME 3 (OSF OPTION)
DIMENSION PLAN - FOUNDATION - OVERALL

SCALE:	3/32" = 1'-0"
EPROJECT NO.:	1363603
CONSTR. CONTR. NO.	
NAVFAC DRAWING NO.	12860110
SHEET 909 OF 1412	

OSB101

DRAWFORM REVISION: 25 AUGUST 2020

Autodesk Docs://2042 MFAT 320 P3 Maintenance Hangar/BLDG P475_OSF 13938S3.rvt
11/11/2025 6:49:48 PM

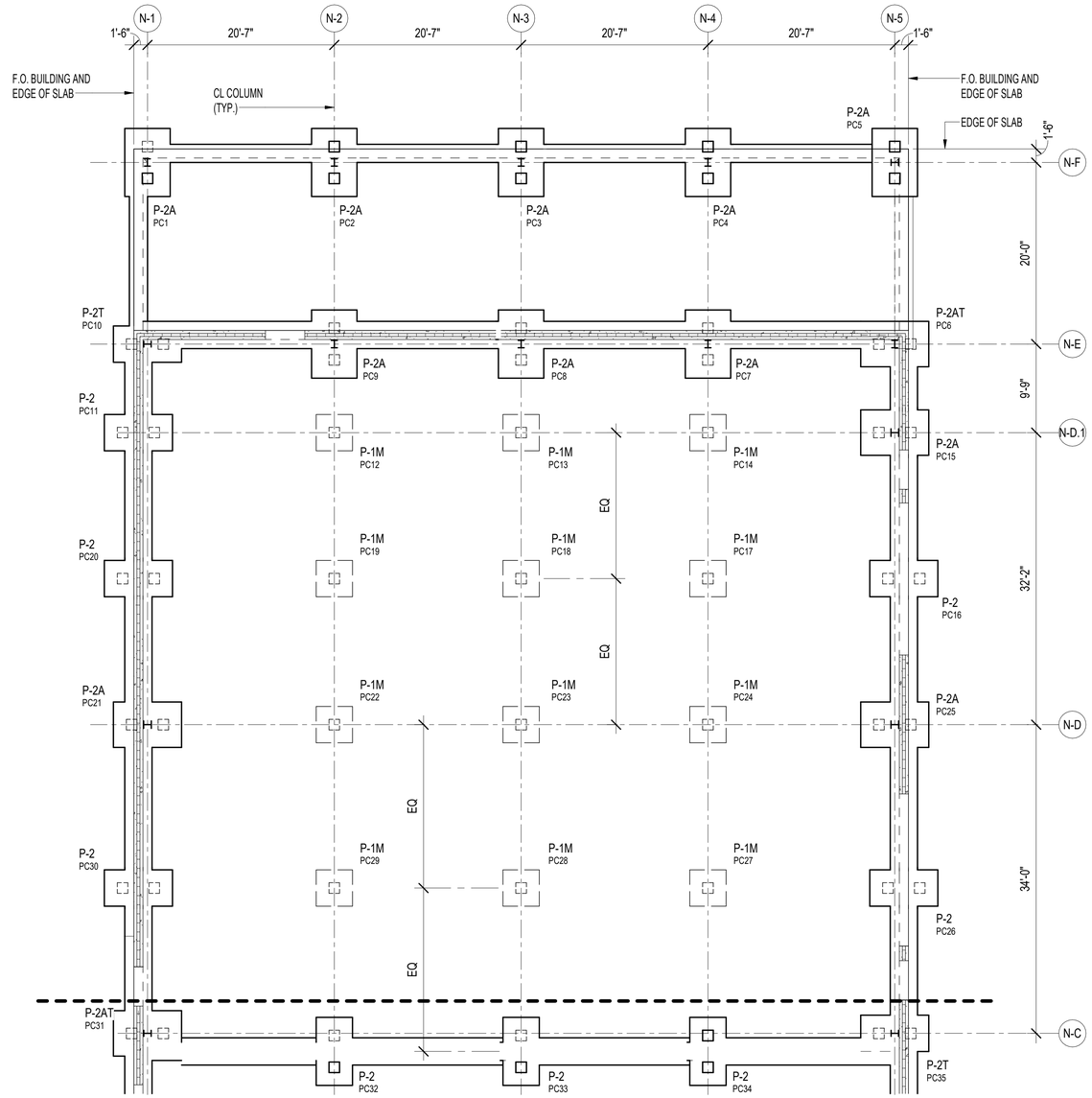

FOR CONTINUATION SEE SHEET OSB101B

A1 DIMENSION PLAN - FOUNDATION - SECTOR A

1/8" = 1'-0"

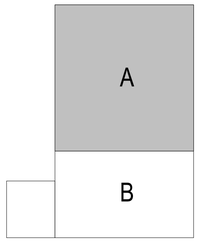

KEYPLAN

0 5' 10' 20' 30'

1/8" = 1'-0" GRAPHIC SCALE

NOTE:
IF THIS DRAWING IS LESS THAN 34" X 22"
IT IS A REDUCED SIZE DRAWING

SPEIGHT·MARSHALL·FRANCIS
STRUCTURAL ENGINEERS
1228 PERIMETER PARKWAY, SUITE 201
VIRGINIA BEACH, VIRGINIA 23454
P: 757.427.1020
7814 CAROUSEL LANE SUITE 200
RICHMOND, VIRGINIA 23294
P: 804.464.4111
SMAF Job No: 20.009-B
WWW.SMANDF.CO

STM	DESCRIPTION	DATE	APPR
	MOD P00006 AND MOD P00007	10/2025	
	MOD P00005	05/2023	

NAVFAC

COMMONWEALTH OF VIRGINIA
EARL H. INGE, JR.
Lic. No. 035522
1/13/2023
PROFESSIONAL ENGINEER

BAMFORTH
ENGINEERS + SURVEYORS

AE INFO

APPROVED
FOR COMMANDER NAVFAC 11/21/2022

ACTIVITY: Approved by J. Scott Roberts, Asset Management Branch Head & Supervisory Facility Planner, PWD Beaufort, SC via email.

SATISFACTORY TO DATE 12/15/2022

DES	EHI	DRW SEC	CHK DWS
PM/DM	KTB / RLH		
BRANCH MANAGER	NEK		
CHIEF ENG/ARCH	EJA		
FP ENGINEER	DSN		

DEPARTMENT OF THE NAVY
NAVAL FACILITIES ENGINEERING SYSTEMS COMMAND
DC CORE
NAVAL FACILITIES ENGINEERING SYSTEMS COMMAND ~ MID-ATLANTIC
NORFOLK, VA
MCAS BEAUFORT
BEAUFORT, SC
P-475 AIRCRAFT MAINTENANCE HANGAR - VOLUME 3 (OSF OPTION)
DIMENSION PLAN - FOUNDATION - SECTOR A

SCALE: 1/8" = 1'-0"
EPROJECT NO.: 1363603
CONSTR. CONTR. NO.
NAVFAC DRAWING NO. 12860111
SHEET 910 OF 1412

OSB101A

DRAWFORM REVISION: 25 AUGUST 2020

Autodesk Docs://2042 MFA1 502 F35 Maintenance Hangar/BLDG F475_OSF 1363603.5.rvt
11/11/2025 5:08:47 PM

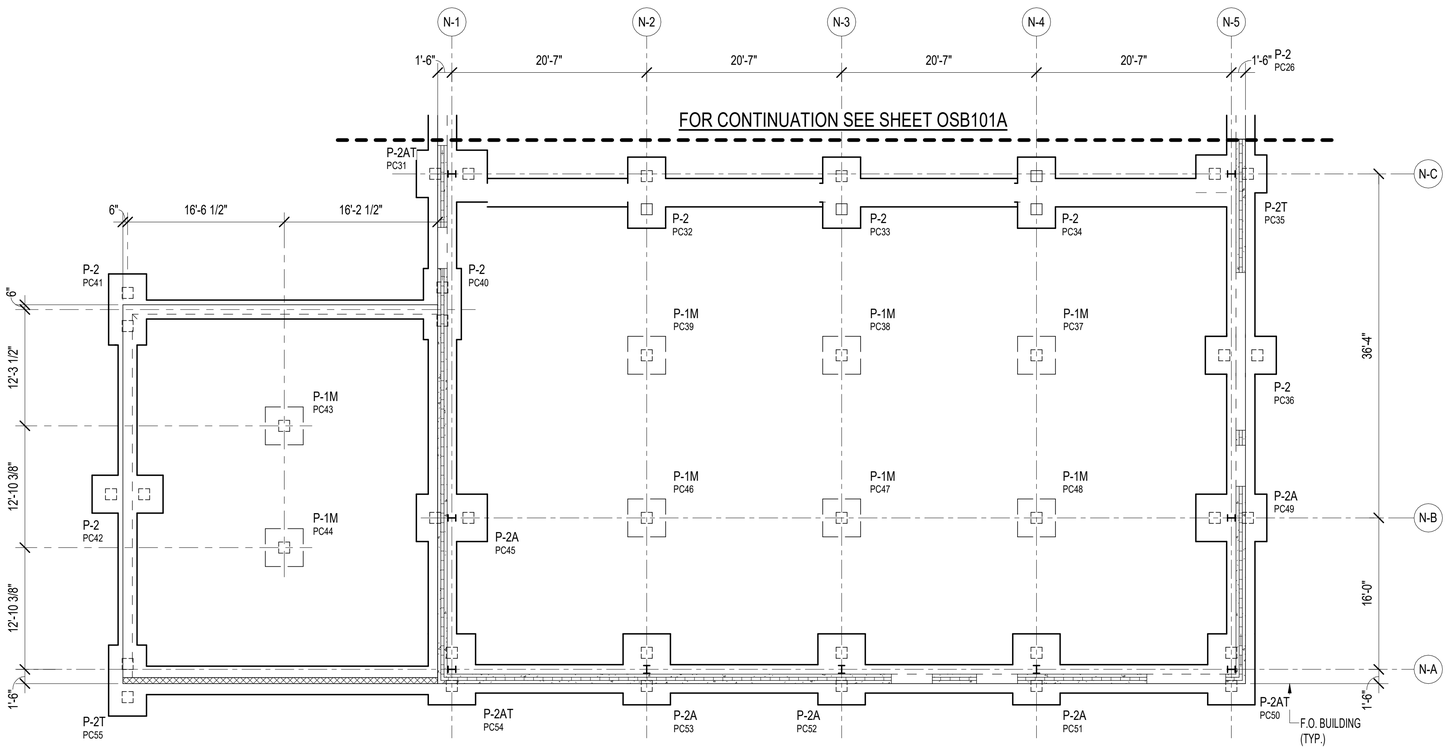

B1 DIMENSION PLAN - FOUNDATION - SECTOR B

1/8" = 1'-0"

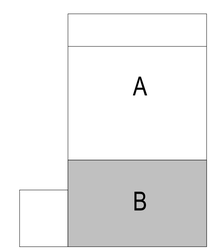

KEYPLAN

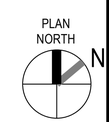

0 5' 10' 20' 30'

1/8" = 1'-0" GRAPHIC SCALE

NOTE:
IF THIS DRAWING IS LESS THAN 34" X 22"
IT IS A REDUCED SIZE DRAWING

SPEIGHT·MARSHALL·FRANCIS
STRUCTURAL ENGINEERS
1228 PERIMETER PARKWAY, SUITE 201
VIRGINIA BEACH, VIRGINIA 23454
P: 757.427.1020
7814 CAROUSEL LANE SUITE 200
RICHMOND, VIRGINIA 23294
P: 804.464.4111
SMF Job No: 20.009-B
WWW.SMANDF.CO

STM	DESCRIPTION	DATE	APPR
	MOD P00006 AND MOD P00007	10/2025	
	MOD P00005	05/2023	

NAVFAC

COMMONWEALTH OF VIRGINIA
EARL H. INGE, JR.
Lic. No. 035522
1/13/2023
PROFESSIONAL ENGINEER

BAMFORTH
ENGINEERS + SURVEYORS

AE INFO

APPROVED

FOR COMMANDER NAVFAC 11/21/2022

ACTIVITY:
Approved by J. Scott Roberts,
Asset Management Branch Head &
Supervisory Facility Planner, PWD
Beaufort, SC via email.

SATISFACTORY TO DATE 12/15/2022

DES	EHI	DRW	SEC	CHK	DWS
PM/DM	KTB / RLH				
BRANCH MANAGER	NEK				
CHIEF ENG/ARCH	EJA				
FP ENGINEER	DSN				

NAVAL FACILITIES ENGINEERING SYSTEMS COMMAND
DEPARTMENT OF THE NAVY
NAVAL FACILITIES ENGINEERING SYSTEMS COMMAND – MID-ATLANTIC
DC CORE NORFOLK, VA
MCAS BEAUFORT
BEAUFORT, SC
P-475 AIRCRAFT MAINTENANCE HANGAR - VOLUME 3 (OSF OPTION)
DIMENSION PLAN - FOUNDATION - SECTOR B

SCALE: 1/8" = 1'-0"
EPROJECT NO.: 1363603
CONSTR. CONTR. NO.
NAVFAC DRAWING NO. 12860112
SHEET 911 OF 1412

OSB101B

DRAWFORM REVISION: 25 AUGUST 2020

Autodesk Docs://20042 MFA T 502 F33 Maintenance Hangar/BLDG PHTS_OSF 1363603-S.rvt
11/11/2025 6:58:47 PM

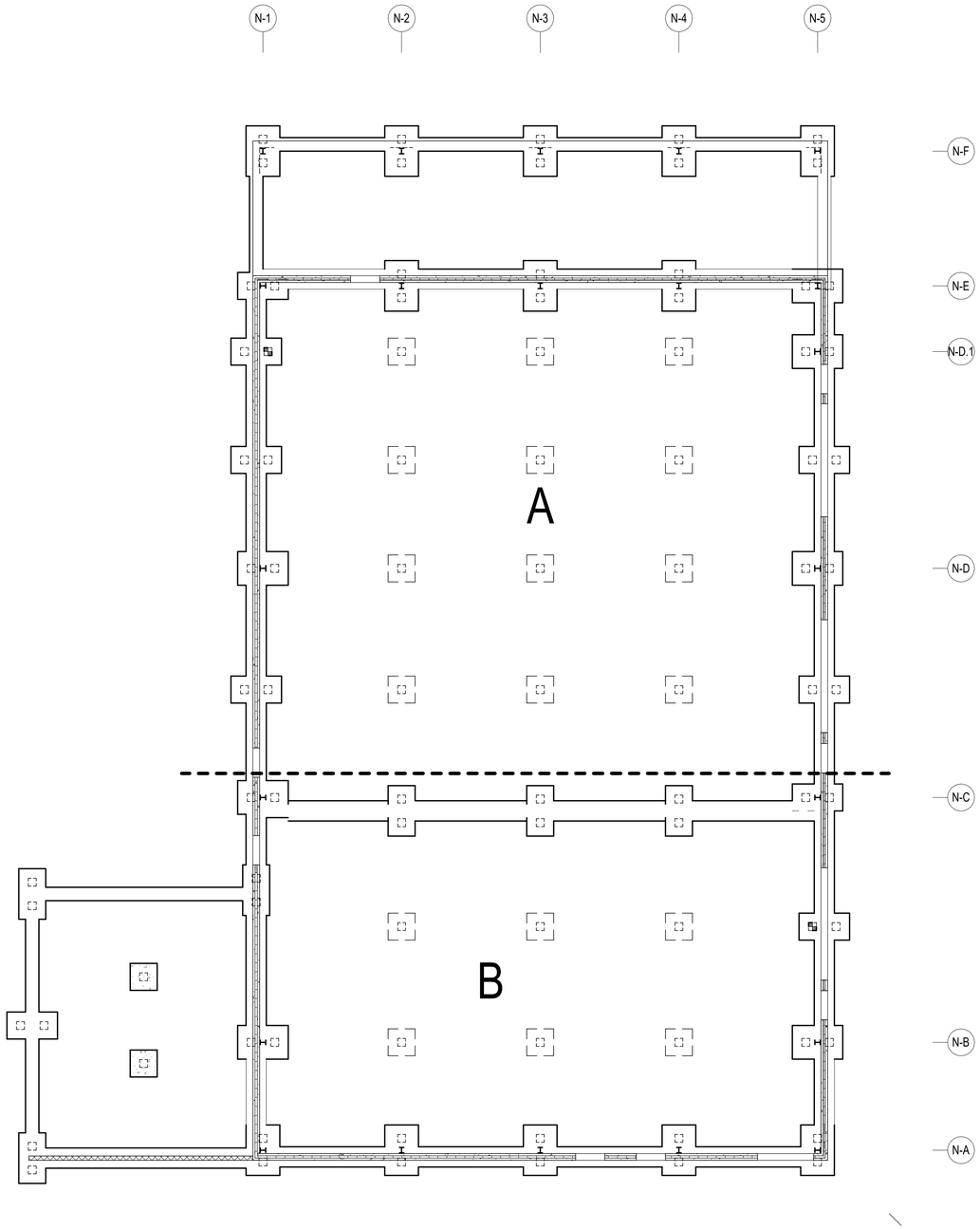

A1 FOUNDATION PLAN - OVERALL

3/32" = 1'-0"

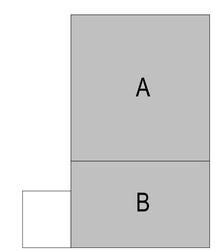

KEYPLAN

PLAN NORTH

N

0 5' 10' 20' 30' 40'

3/32" = 1'-0" GRAPHIC SCALE

NOTE:
IF THIS DRAWING IS LESS THAN 34" X 22"
IT IS A REDUCED SIZE DRAWING

SPEIGHT·MARSHALL·FRANCIS
STRUCTURAL ENGINEERS
1228 PERIMETER PARKWAY, SUITE 201
VIRGINIA BEACH, VIRGINIA 23454
P: 757.427.1020
7814 CAROUSEL LANE SUITE 200
RICHMOND, VIRGINIA 23294
P: 804.464.4111
SMAF Job No: 20.009-B
WWW.SMANDF.CO

STM	DESCRIPTION	DATE	APPR
	MOD P00006 AND MOD P00007	10/2025	
	MOD P00005	05/2023	

NAVFAC

COMMONWEALTH OF VIRGINIA
EARL H. INGE, JR.
Lic. No. 035522
1/13/2023
PROFESSIONAL ENGINEER

BAMFORTH
ENGINEERS + SURVEYORS

AE INFO

APPROVED

FOR COMMANDER NAVFAC

ACTIVITY
Approved by J. Scott Roberts,
Asset Management Branch Head &
Supervisory Facility Planner, PWD
Beaufort, SC via email.

SATISFACTORY TO DATE	12/15/2022
DES EHI / DRW SEC / CHK DWS	
PMDM	KTB / RLH
BRANCH MANAGER	NEK
CHIEF ENG/ARCH	EJA
FP ENGINEER	DSN

DEPARTMENT OF THE NAVY
NAVAL FACILITIES ENGINEERING SYSTEMS COMMAND
NAVAL FACILITIES ENGINEERING SYSTEMS COMMAND ~ MID-ATLANTIC
NORFOLK, VA
DC CORE:
MCAS BEAUFORT
BEAUFORT, SC

P-475 AIRCRAFT MAINTENANCE HANGAR - VOLUME 3 (OSF OPTION)

FOUNDATION PLAN - OVERALL

SCALE:	3/32" = 1'-0"
EPROJECT NO.:	1363603
CONSTR. CONTR. NO.	
NAVFAC DRAWING NO.	12860113
SHEET 912 OF 1412	

OSB102

DRAWFORM REVISION: 25 AUGUST 2020

Autodesk Docs://2042 MFAT 320 F35 Maintenance Hangar/BLDG PKTS_OSF 13639803.0.rvt
11/11/2025 6:58:47 PM

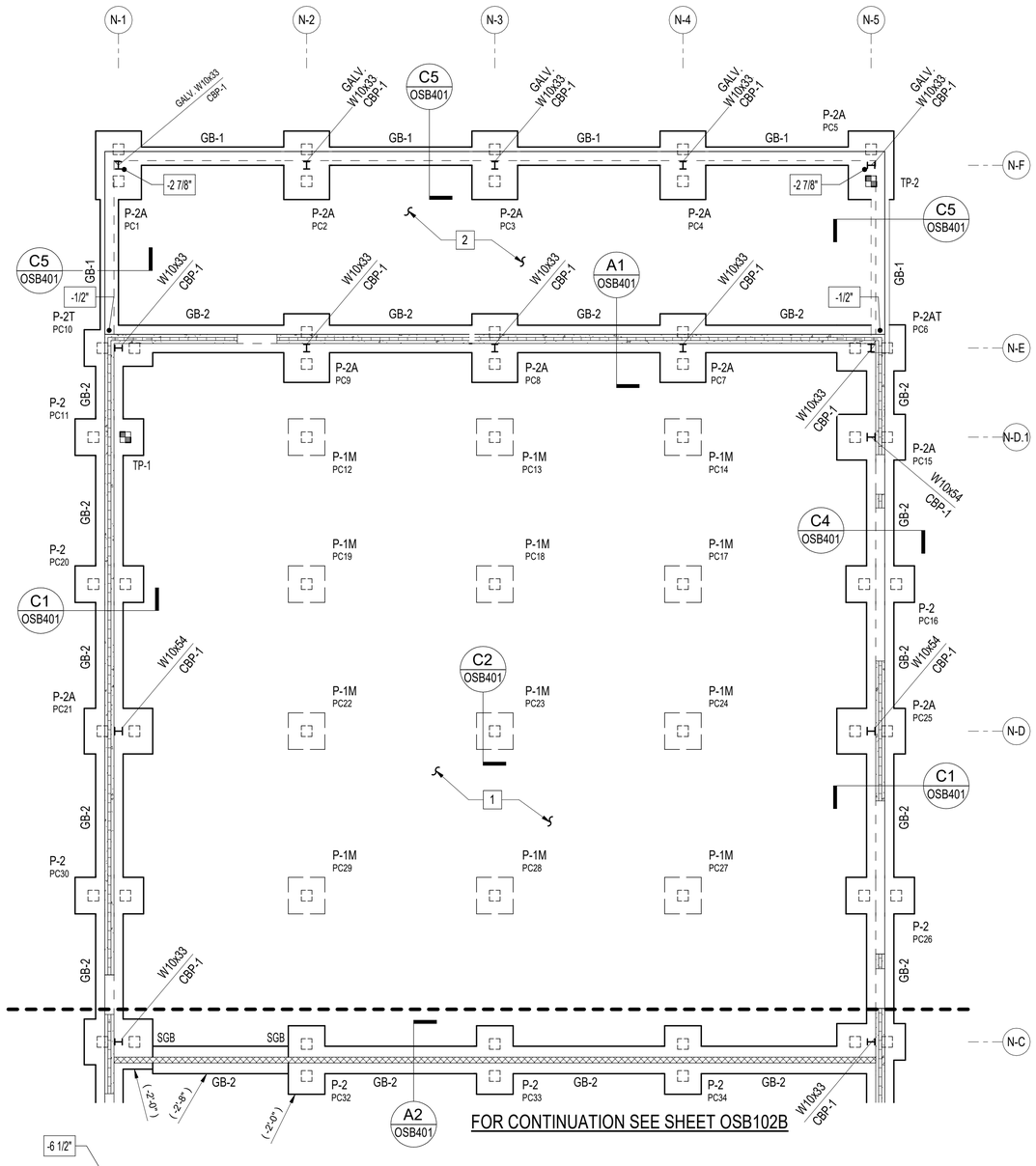

A1 FOUNDATION PLAN - SECTOR A

1/8" = 1'-0"

FOR CONTINUATION SEE SHEET OSB102B

FOUNDATION PLAN LEGEND :

-XX"	=	TOP OF SLAB ELEVATION - MEASURED FROM REFERENCE ELEVATION 0'-0"
	=	CHANGE IN SLAB ELEVATION - SEE THE ARCHITECTURAL DRAWINGS FOR EXACT SIZE AND LOCATION
	=	EXTENT OF SLAB SLOPE - SEE THE ARCHITECTURAL DRAWINGS FOR EXACT LOCATION
X	=	COLUMN GRID MARK
	=	SANITARY OR STORM SEWER PIPING BELOW SLAB - COORDINATE WITH PLUMB. DWGS. (PIPING PARTIALLY SHOWN, SEE PLUMB. DWGS. FOR ADDITIONAL PIPING NOT SHOWN)
COLUMN SIZE / GBP-X	=	COLUMN AND COLUMN BASE PLATE MARK - SEE COLUMN BASE PLATE DETAILS ON SHEET OSB502
GB-X	=	GRADE BEAM MARK - SEE SCHEDULE AND TYPICAL DETAIL ON SHEET OSB502
P-X	=	PILE CAP MARK - SEE TYPICAL DETAILS ON SHEET OSB501
P-XM	=	MONOLITHIC PILE CAP MARK - SEE SECTION C2/OSB401
PCX	=	PILE CAP IDENTIFICATION NUMBER - FOR REFERENCE ONLY
(-X'-X")	=	TOP OF PILE CAP / GRADE BEAM ELEVATION - MEASURED FROM REFERENCE ELEVATION 0'-0"
	=	TEST PILE LOCATION
TP-X	=	TEST PILE NUMBER
P-XT	=	"T" SUFFIX ON PILE CAP MARK INDICATES TENSION PILE CAP
P-XM	=	"M" SUFFIX ON PILE CAP MARK INDICATES MONOLITHIC PILE CAP - TOP OF PILE CAP ELEVATION EQUALS TOP OF SLAB ELEVATION

GENERAL FOUNDATION PLAN NOTES :

A. SEE THE CIVIL DRAWINGS FOR ACTUAL FINISHED FLOOR ELEVATION. TOP OF SLAB EQUALS FINISHED FLOOR ELEVATION AND MUST SERVE AS THE REFERENCE ELEVATION 0'-0".

B. FOR THE STRUCTURAL NOTES AND ABBREVIATIONS SEE SHEETS OS-001 AND OS-002.

C. SEE THE DIMENSION PLAN ON SHEET OSB101 AND THE ARCHITECTURAL DRAWINGS FOR DIMENSIONS NOT SHOWN. SEE THE ARCHITECTURAL DRAWINGS FOR LOCATIONS OF MASONRY CONTROL JOINTS AND PRECAST CONCRETE DETAILS

D. TOP OF ALL PILE CAPS AND GRADE BEAMS MUST BE 2'-0" BELOW REFERENCE ELEVATION 0'-0", UNLESS OTHERWISE NOTED.

E. PILE CAP AND GRADE BEAM CENTERLINES MUST COINCIDE WITH COLUMN CENTERLINES, UNLESS OTHERWISE NOTED.

X FOUNDATION PLAN KEY NOTES :

1. FIRST FLOOR MUST BE A 10" THICK STRUCTURAL SLAB REINFORCED WITH #6 AT 8" ON-CENTER MAXIMUM TOP AND #6 AT 12" ON-CENTER, BOTTOM BOTH LAYERS EACH WAY, OVER 15 MIL. VAPOR RETARDER MINIMUM (SEE SPECIFICATIONS FOR ADDITIONAL INFORMATION), OVER 4" POUROUS FILL.

2. FIRST FLOOR MUST BE A 12" THICK STRUCTURAL SLAB REINFORCED WITH #6 AT 8" ON-CENTER MAXIMUM TOP AND #6 AT 12" ON-CENTER, BOTTOM BOTH LAYERS EACH WAY, OVER 15 MIL. VAPOR RETARDER MINIMUM (SEE SPECIFICATIONS FOR ADDITIONAL INFORMATION), OVER 4" POUROUS FILL.

3. THE MECHANICAL YARD SLAB, FOUNDATION AND PILES ARE BASE BID. SEE VOLUME 6 FOR BASE BID DRAWINGS.

INNER LAYERS — REINFORCING PLACEMENT SEQUENCE (TYP. U.O.N.) — OUTER LAYERS

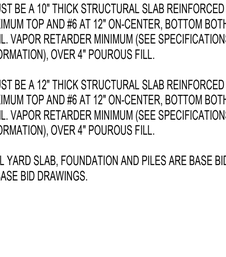

KEYPLAN

PLAN NORTH

0 5' 10' 20' 30'

1/8" = 1'-0" GRAPHIC SCALE

NOTE:
IF THIS DRAWING IS LESS THAN 34" X 22"
IT IS A REDUCED SIZE DRAWING

SPEIGHT-MARSHALL-FRANCIS
STRUCTURAL ENGINEERS
1228 PERIMETER PARKWAY, SUITE 201
VIRGINIA BEACH, VIRGINIA 23454
P: 757.427.1020
7814 CARDUSBEL LANE SUITE 200
RICHMOND, VIRGINIA 23294
P: 804.464.4111
SMMF Job No: 20.009-B
WWW.SMANDF.CO

STM	DESCRIPTION	DATE	APPR
	MOD P00006 AND MOD P00007	10/2025	
	MOD P00005	05/2023	

NAVFAC

COMMONWEALTH OF VIRGINIA
EARL H. INGE, JR.
Lic. No. 035522
1/13/2023
PROFESSIONAL ENGINEER

BAMFORTH ENGINEERS + SURVEYORS

AE INFO

APPROVED
FOR COMMANDER NAVFAC
ACTIVITY: Approved by J. Scott Roberts, Asset Management Branch Head & Supervisory Facility Planner, PWD Beaufort, SC via email.
SATISFACTORY TO DATE 12/15/2022

DES EHI	DRW SEC	CHK DWS	
PMDM	KTB / RLH		
BRANCH MANAGER	NEK		
CHIEF ENG/ARCH	EJA		
FP ENGINEER	DSN		

DEPARTMENT OF THE NAVY
NAVAL FACILITIES ENGINEERING SYSTEMS COMMAND
DC.CORE:
NAVAL FACILITIES ENGINEERING SYSTEMS COMMAND ~ MID-ATLANTIC
NORFOLK, VA
MCAS BEAUFORT
BEAUFORT, SC
P-475 AIRCRAFT MAINTENANCE HANGAR - VOLUME 3 (OSF OPTION)
FOUNDATION PLAN - SECTOR A

SCALE: As indicated
EPROJECT NO.: 1363603
CONSTR. CONTR. NO.
NAVFAC DRAWING NO. 12860114
SHEET 913 OF 1412

OSB102A

DRAWFORM REVISION: 25 AUGUST 2020

Autodesk Docs://2042 \MFAT 502 F35 Maintenance Hangar\BLDG F475_OSF 1363603-S.rvt
11/11/2025 6:58:49 PM

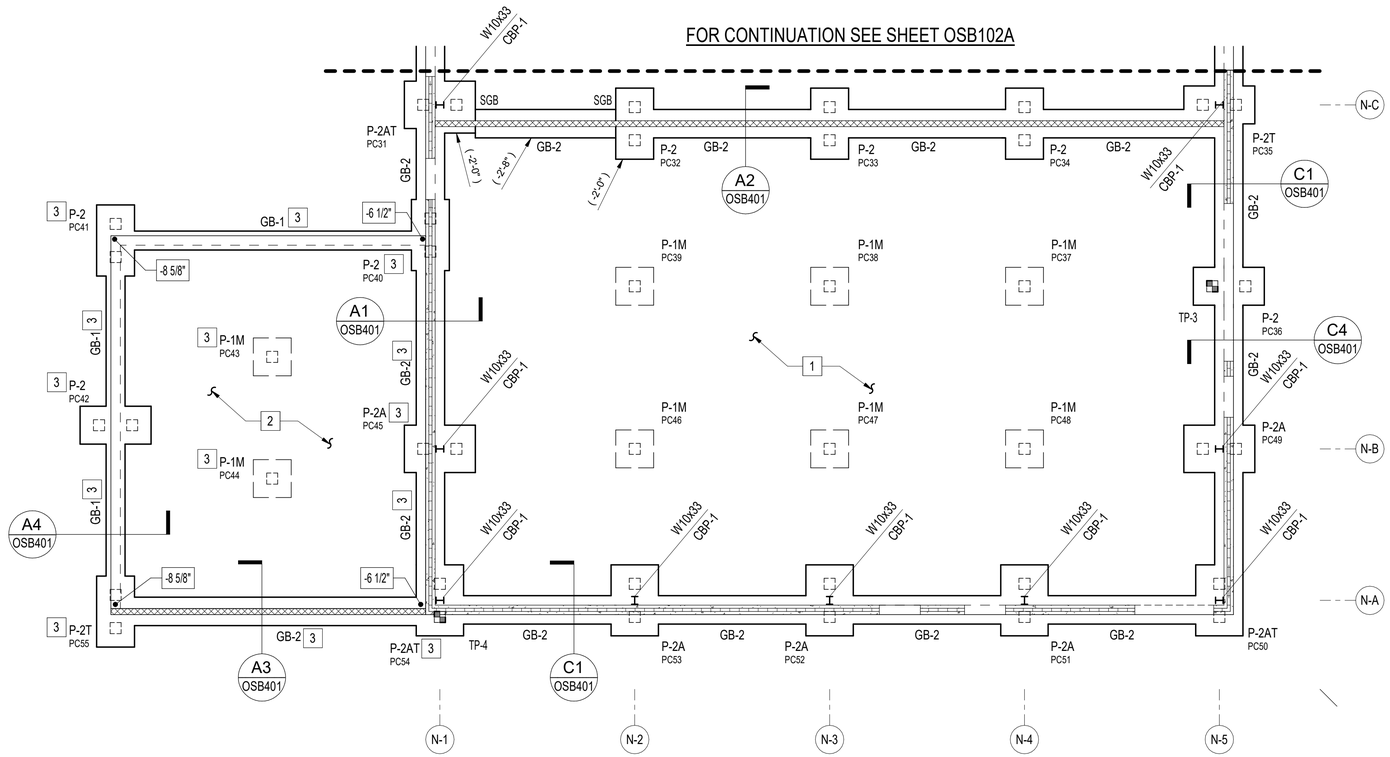

B1 FOUNDATION PLAN - SECTOR B

1/8" = 1'-0" (FOR PLAN NOTES AND LEGEND SEE SHEET SB102A)

INNER LAYERS — REINFORCING PLACEMENT SEQUENCE (TYP. U.O.N.) — OUTER LAYERS

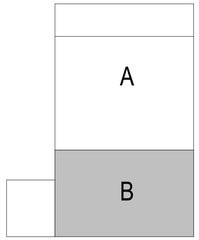

KEYPLAN

PLAN NORTH

0 ½" 1" 2" 3" 4"

1'-0" = 1'-0" GRAPHIC SCALE

NOTE:
IF THIS DRAWING IS LESS THAN 34" X 22"
IT IS A REDUCED SIZE DRAWING

SPEIGHT·MARSHALL·FRANCIS
STRUCTURAL ENGINEERS
1228 PERIMETER PARKWAY, SUITE 201
VIRGINIA BEACH, VIRGINIA 23454
P: 757.427.1020
7814 CAROUSEL LANE SUITE 200
RICHMOND, VIRGINIA 23294
P: 804.464.4111
SMF Job No: 20.009-B
WWW.SMANDF.CO

STM	DESCRIPTION	DATE	APPR
	MOD P00006 AND MOD P00007	10/2025	
	MOD P00005	05/2023	

NAVFAC

COMMONWEALTH OF VIRGINIA
EARL H. INGE, JR.
Lic. No. 035522
1/13/2023
PROFESSIONAL ENGINEER

BAMFORTH ENGINEERS + SURVEYORS

AE INFO

APPROVED
FOR COMMANDER NAVFAC

ACTIVITY:
Approved by J. Scott Roberts,
Asset Management Branch Head &
Supervisory Facility Planner, PWD
Beaufort, SC via email.

SATISFACTORY TO DATE: 12/15/2022

DES	EHI	DRW	SEC	CHK	DWS
PM/DM	KTB / RLH				
BRANCH MANAGER	NEK				
CHIEF ENG/ARCH	EJA				
FP ENGINEER	DSN				

DEPARTMENT OF THE NAVY
NAVAL FACILITIES ENGINEERING SYSTEMS COMMAND
DC CORE:
NAVAL FACILITIES ENGINEERING SYSTEMS COMMAND – MID-ATLANTIC
NORFOLK, VA
MCAS BEAUFORT
BEAUFORT, SC
P-475 AIRCRAFT MAINTENANCE HANGAR - VOLUME 3 (OSF OPTION)
FOUNDATION PLAN - SECTOR B

SCALE: As indicated
EPROJECT NO.: 1363603
CONSTR. CONTR. NO.
NAVFAC DRAWING NO. 12860115
SHEET 914 OF 1412

OSB102B

DRAWFORM REVISION: 25 AUGUST 2020

Autodesk Docs://20062 MFA1 502 F35 Maintenance Hangar/BLDG PH25_OSF 1363603-S.rvt
11/11/2025 6:58:48 PM

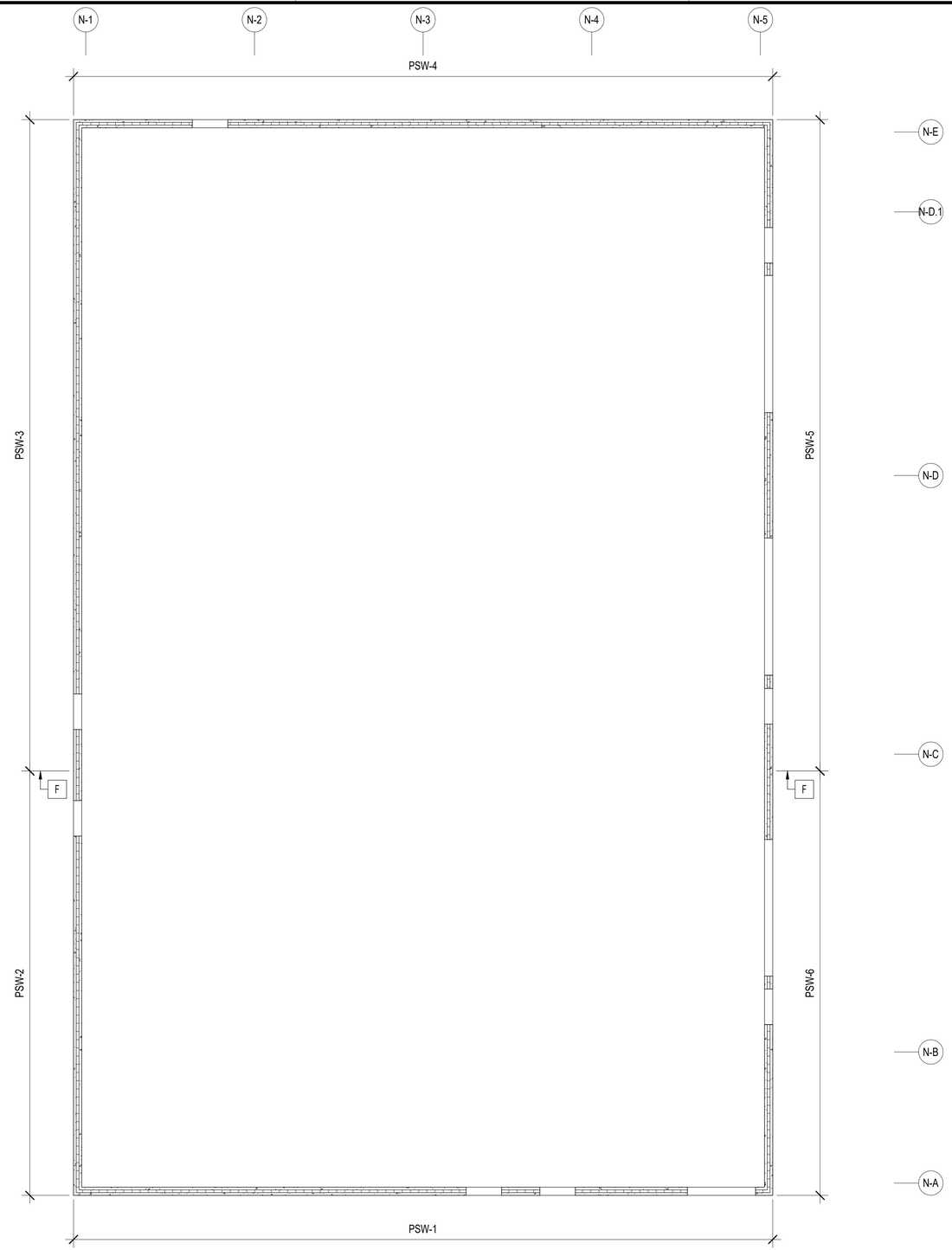

A1 PRECAST LOADING PLAN
1/8" = 1'-0"

PRECAST LOADING PLAN NOTES :

A. FOR THE STRUCTURAL NOTES AND ABBREVIATIONS SEE SHEETS 0SB001 AND OSB002.

B. FOR DIMENSIONS NOT SHOWN SEE THE DIMENSION PLAN ON SHEETS OSB101, OSB102 AND THE ARCHITECTURAL DRAWINGS.

C. SEE THE ARCHITECTURAL DRAWINGS FOR ADDITIONAL INFORMATION REGARDING THE PRECAST CONCRETE SYSTEM REQUIREMENTS.

D. WALLS NOT LABELED NOT PART OF THE LATERAL FORCE RESISTING SYSTEM - FOUNDATIONS HAVE BEEN DESIGNED FOR THEIR ASSUMED SELF-WEIGHT ONLY.

E. LOADS SHOWN ON PLAN AND SCHEDULES ARE THE LATERAL IN-PLANE DESIGN LOADS FOR THE PRECAST CONCRETE WALLS. SEE PRECAST ARCHITECTURAL CONCRETE NOTES' ON SHEET S-001 FOR MORE INFORMATION.

F. PRECAST WALL PANEL JOINT AT CHANGE IN PRECAST WALL ELEVATION.

PRECAST LOADING PLAN LEGEND :

PSW-X = PRECAST CONCRETE SHEARWALL MARK (LFRS)

X = COLUMN GRID MARK

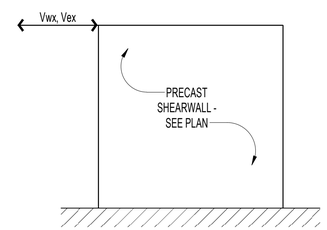

PRECAST CONCRETE SHEARWALL MARK (PSW-X)	SEISMIC LOAD SHEAR AT TOP OF THE WALL (Vex, KIPS)	WIND LOAD SHEAR AT TOP OF THE WALL (Vwx, KIPS)
PSW-1	18.2	9.7
PSW-2	18.2	12.5
PSW-3	26.1	16.1
PSW-4	26.1	19.6
PSW-5	26.1	16.1
PSW-6	18.2	12.5

NOTE:
1. LOADS ARE ULTIMATE.

PLAN NORTH
N

0 ½" 1" 2" 3" 4"
1'-0" = 1'-0" GRAPHIC SCALE

NOTE:
IF THIS DRAWING IS LESS THAN 34" X 22"
IT IS A REDUCED SIZE DRAWING

STM	DESCRIPTION	DATE	APPR
	MOD P00006 AND MOD P00007	10/2025	
	MOD P00005	05/2023	

NAVFAC

COMMONWEALTH OF VIRGINIA
EARL H. INGE, JR.
Lic. No. 035522
1/13/2023
PROFESSIONAL ENGINEER

BAMFORTH ENGINEERS + SURVEYORS

AE INFO

APPROVED
FOR COMMANDER NAVFAC

ACTIVITY
Approved by J. Scott Roberts,
Asset Management Branch Head &
Supervisory Facility Planner, PWD
Beaufort, SC via email.

SATISFACTORY TO DATE 12/15/2022

DES	EHI	DRW	SEC	CHK	DWS

PMDM KTB / RLH
BRANCH MANAGER NEK
CHIEF ENG/ARCH EJA
FP ENGINEER DSN

DEPARTMENT OF THE NAVY
NAVAL FACILITIES ENGINEERING SYSTEMS COMMAND
NAVAL FACILITIES ENGINEERING SYSTEMS COMMAND ~ MID-ATLANTIC
NORFOLK, VA
DC CORE:
MCAS BEAUFORT
BEAUFORT, SC
P-475 AIRCRAFT MAINTENANCE HANGAR - VOLUME 3 (OSF OPTION)
PRECAST LOADING PLAN

SCALE: As indicated
EPROJECT NO.: 1363603
CONSTR. CONTR. NO.
NAVFAC DRAWING NO. 12860116
SHEET 915 OF 1412
OSB103

DRAWFORM REVISION: 25 AUGUST 2020

Autodesk Docs://2042 NAFAI 520 F35 Maintenance Hangar/BLDG PKG_OSF 13363603.rvt
11/11/2025 6:29:49 PM

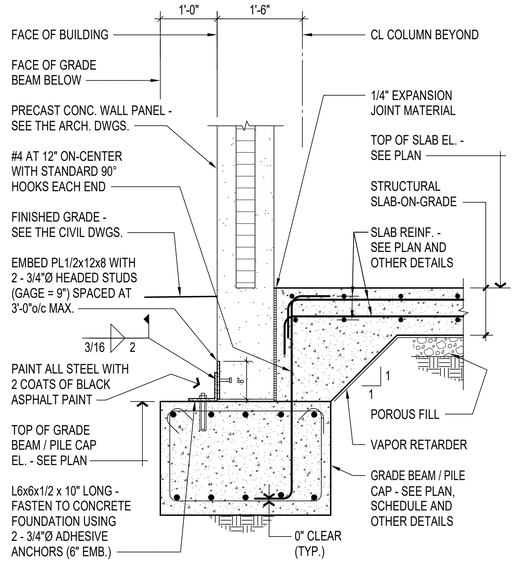

C1 SECTION
3/4" = 1'-0"

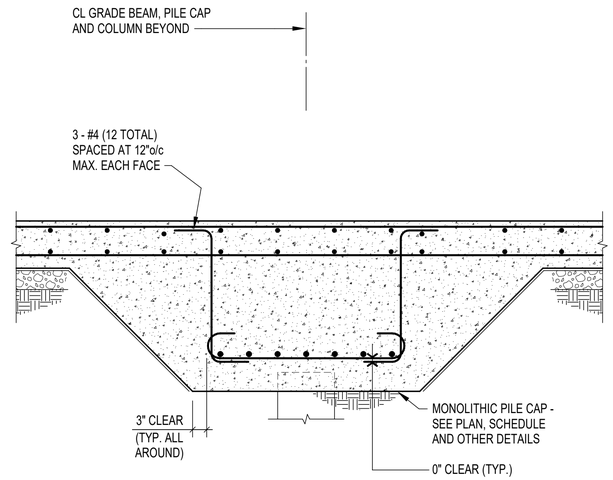

FOR DETAILS NOT NOTED SEE SECTION C1/SB401

C2 SECTION
3/4" = 1'-0"

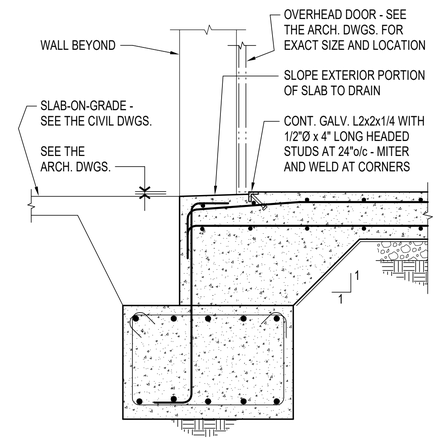

FOR DETAILS NOT NOTED SEE SECTION C1/OSB401

C4 SECTION
3/4" = 1'-0"

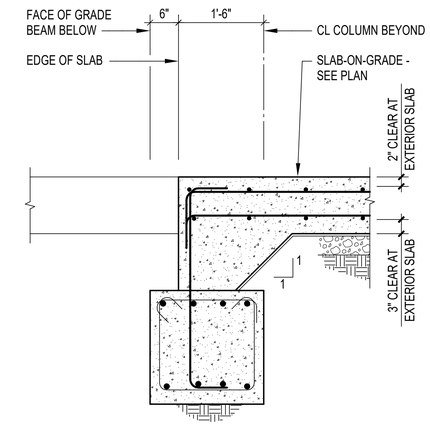

FOR DETAILS NOT NOTED SEE SECTION C4/OSB401

C5 SECTION
3/4" = 1'-0"

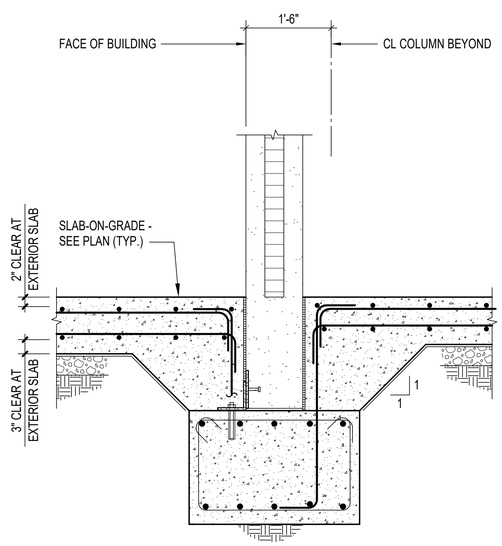

FOR DETAILS NOT NOTED SEE SECTION C1/OSB401

A1 SECTION
3/4" = 1'-0"

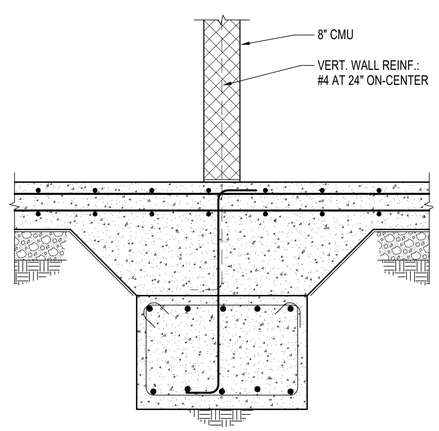

FOR DETAILS NOT NOTED SEE SECTION C1/OSB40

A2 SECTION
3/4" = 1'-0"

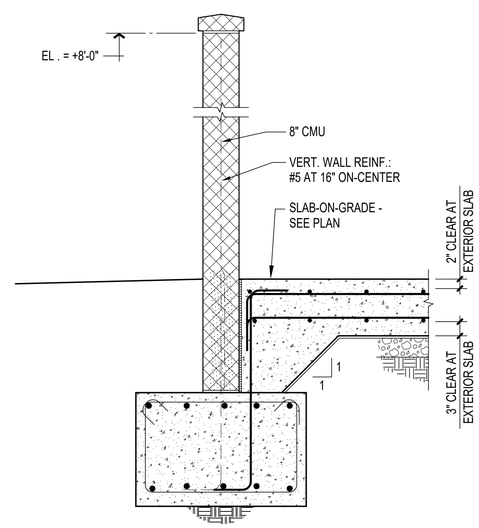

FOR DETAILS NOT NOTED SEE SECTION C1/OSB401

A3 SECTION
3/4" = 1'-0"

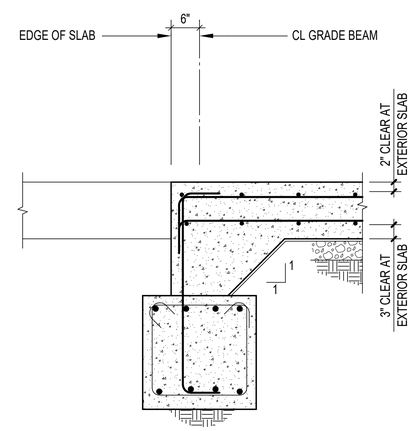

FOR DETAILS NOT NOTED SEE SECTION C5/OSB401

A4 SECTION
3/4" = 1'-0"

0 4" 1' 2' 3' 4' 5'
3/4" = 1'-0" GRAPHIC SCALE

SPEIGHT·MARSHALL·FRANCIS
STRUCTURAL ENGINEERS
1228 PERIMETER PARKWAY, SUITE 201
VIRGINIA BEACH, VIRGINIA 23454
P: 757 427.1020
7814 CAROUSEL LANE SUITE 200
RICHMOND, VIRGINIA 23294
P: 804.464.4111
SMMF Job No: 20.009-B
WWW.SMANDF.CO

NOTE:
IF THIS DRAWING IS LESS THAN 34" X 22"
IT IS A REDUCED SIZE DRAWING

STM	DESCRIPTION	DATE	APPR
	MOD P00006 AND MOD P00007	10/2025	
	MOD P00005	05/2023	

NAVFAC

COMMONWEALTH OF VIRGINIA
EARL H. INGE, JR.
Lic. No. 035522
1/13/2023
PROFESSIONAL ENGINEER

BAMFORTH ENGINEERS + SURVEYORS

AE INFO

APPROVED
FOR COMMANDER NAVFAC

ACTIVITY
Approved by J. Scott Roberts, Asset Management Branch Head & Supervisory Facility Planner, PWD Beaufort, SC via email.

SATISFACTORY TO DATE	12/15/2022		
DES EHI	DRW SEC	CHK DWS	
PMDM	KTB / RLH		
BRANCH MANAGER	NEK		
CHIEF ENG/ARCH	EJA		
FP ENGINEER	DSN		

DEPARTMENT OF THE NAVY
NAVAL FACILITIES ENGINEERING SYSTEMS COMMAND ~ MID-ATLANTIC
NAVAL FACILITIES ENGINEERING SYSTEMS COMMAND
NORFOLK, VA
DC CORE:
MCAS BEAUFORT
BEAUFORT, SC
P-475 AIRCRAFT MAINTENANCE HANGAR - VOLUME 3 (OSF OPTION)
FOUNDATION SECTIONS

SCALE:	3/4" = 1'-0"
EPROJECT NO.:	1363603
CONSTR. CONTR. NO.	
NAVFAC DRAWING NO.	12860117
SHEET 916 OF 1412	

OSB401

DRAWFORM REVISION: 25 AUGUST 2020

Autodesk Docs://2042 MFAT 520 F35 Maintenance Hangar/BLDG PKTS_OSF 13363603.S.rvt
11/11/2025 6:58:50 PM

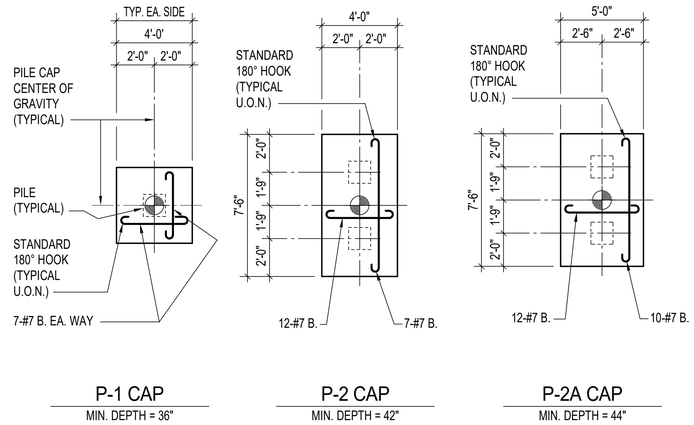

C1 TYPICAL PILE CAP DETAILS

NOT TO SCALE

TYPICAL PILE EMBEDMENT DETAILS NOTES:

1. PILE CAP DEPTHS SHOWN ARE MINIMUM. CAPS SHALL BE 4" DEEPER THAN GRADE BEAM DEPTHS.
2. PILE CAP MARKS DENOTED ON FOUNDATION PLAN WITH A SUPERSCRIPT 'T' SUFFIX (P-XT) ARE PILE CAPS CONTAINING TENSION AND PILES. FOR ALL SUCH PILE CAPS, PROVIDE TOP REINFORCING OF THE SAME SIZE AND SPACING AS THE SPECIFIED BOTTOM REINFORCING.
3. ASTM A970 COMPLIANT HEADED BAR OR FIELD INSTALLED T-HEAD CAPABLE OF RESISTING 125% OF THE TENSION CAPACITY OF DOWEL.
4. SEE THIS SHEET FOR PILE DESIGN CRITERIA.

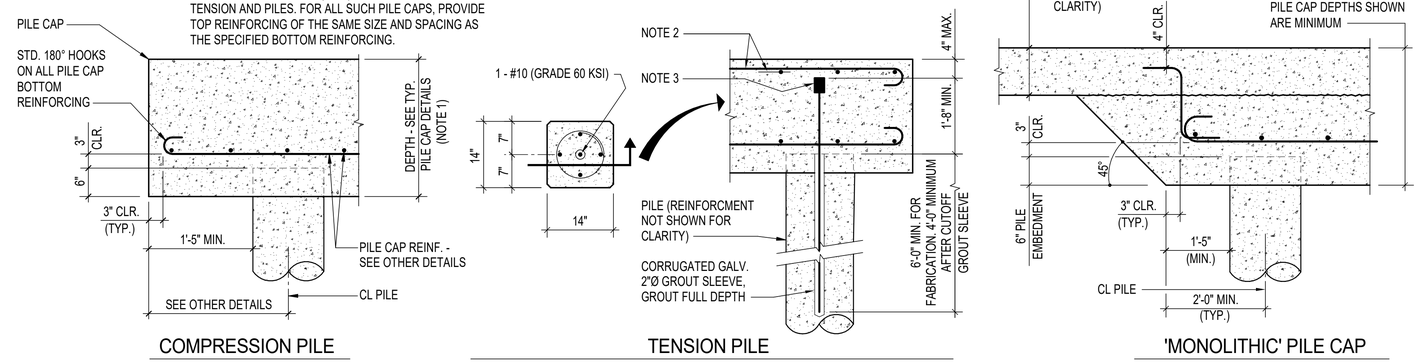

C2 TYPICAL PILE EMBEDMENT DETAILS

NOT TO SCALE

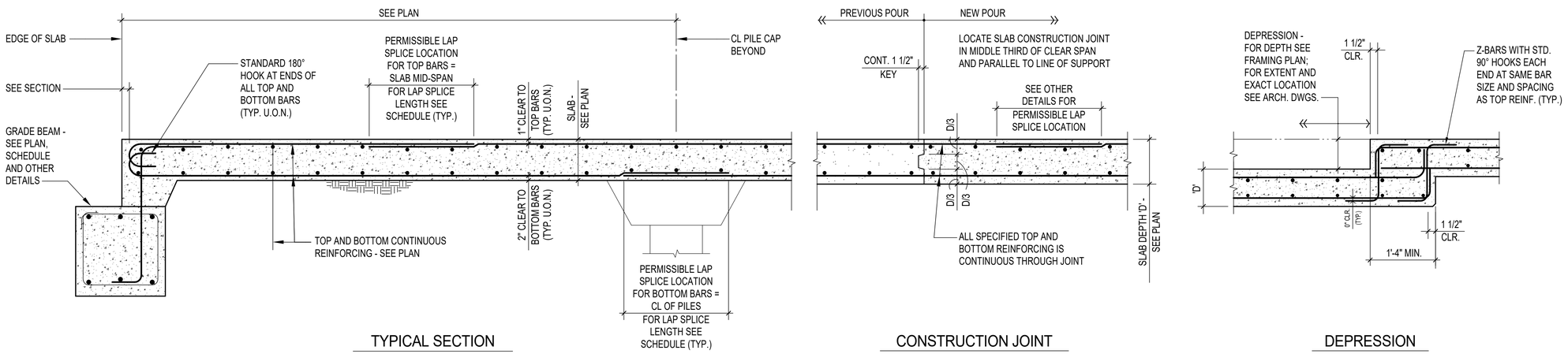

B1 TYPICAL STRUCTURAL SLAB-ON-GRADE DETAILS

NOT TO SCALE

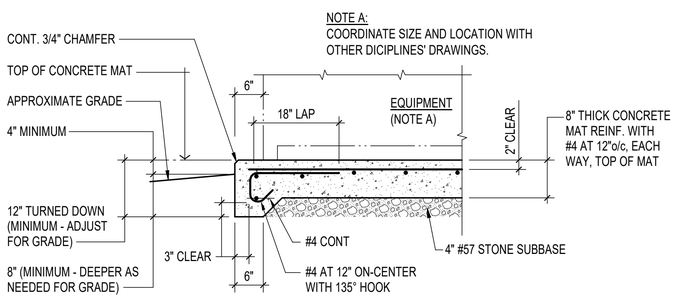

A1 TYPICAL EXTERIOR EQUIPMENT PAD DETAIL

NOT TO SCALE

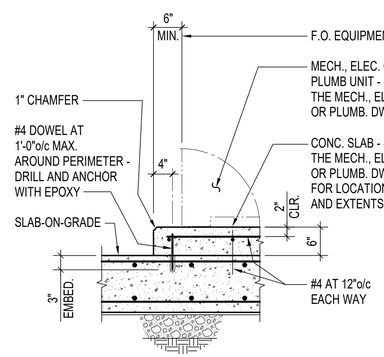

A2 TYPICAL HOUSEKEEPING PAD DETAIL

NOT TO SCALE

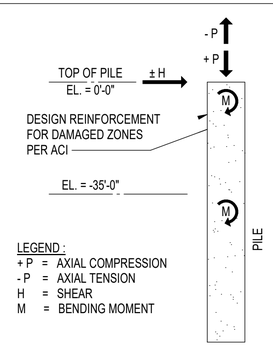

PILE DESIGN SCHEDULE				
ELEVATION 0'-0" TO -35'-0"	AXIAL (TONS)	SHEAR (TONS)	BENDING (FT-KIPS)	UNBRACED LENGTH (FT)
LOAD COMBINATION 1	80	0	0	0
LOAD COMBINATION 2	80	4.5	25	10
LOAD COMBINATION 3	-55	4.5	25	10
ELEVATION -35'-0" TO -75'-0'	AXIAL (TONS)	SHEAR (TONS)	BENDING (FT-KIPS)	UNBRACED LENGTH (FT)
LOAD COMBINATION 4	80	-2	-2	10
LOAD COMBINATION 5	-55	-2	-2	10

PILE DESIGN SCHEDULE NOTES:

1. AXIAL LOADS ARE SERVICE LOADS.
2. SHEAR AND BENDING LOADS ARE ULTIMATE LOADS.

A3 PILE DESIGN CRITERIA

NOT TO SCALE

SPEIGHT·MARSHALL·FRANCIS STRUCTURAL ENGINEERS
1228 PERIMETER PARKWAY, SUITE 201
VIRGINIA BEACH, VIRGINIA 23454
P: 757.427.1020
7814 CAROUSEL LANE SUITE 200
RICHMOND, VIRGINIA 23294
P: 804.464.4111
WWW.SMANDF.CO
SM&F Job No: 20.008-B

NOTE:
IF THIS DRAWING IS LESS THAN 34" X 22"
IT IS A REDUCED SIZE DRAWING

STM	DESCRIPTION	DATE	APPR
	MOD P00006 AND MOD P00007	10/2025	
	MOD P00005	05/2023	

NAVFAC

COMMONWEALTH OF VIRGINIA
EARL H. INGE, JR.
Lic. No. 035522
1/13/2023
PROFESSIONAL ENGINEER

BAMFORTH ENGINEERS + SURVEYORS

AE INFO

APPROVED
FOR COMMANDER NAVFAC
ACTIVITY: Approved by J. Scott Roberts; Asset Management Branch Head & Supervisory Facility Planner, PWD Beaufort, SC via email.
SATISFACTORY TO DATE 12/15/2022

DES	EHI	DRW	SEC	CHK	DWS
PM/DM	KTB / RLH				
BRANCH MANAGER	NEK				
CHIEF ENG/ARCH	EJA				
FP ENGINEER	DSN				

DEPARTMENT OF THE NAVY
NAVAL FACILITIES ENGINEERING SYSTEMS COMMAND
DC CODE:
NAVAL FACILITIES ENGINEERING SYSTEMS COMMAND – MID-ATLANTIC
NORFOLK, VA
MCAS BEAUFORT
BEAUFORT, SC
P-475 AIRCRAFT MAINTENANCE HANGAR - VOLUME 3 (OSF OPTION)
TYPICAL FOUNDATION DETAILS

SCALE: 3/4" = 1'-0"
EPROJECT NO.: 1363603
CONSTR. CONTR. NO.
NAVFAC DRAWING NO. 12860118
SHEET 917 OF 1412
OSB501

DRAWFORM REVISION: 25 AUGUST 2020

Autodesk Docs://0042 MF-AT 202 F35 Maintenance Hangar/BLDG F475_OSF 19C9053.rvt
11/11/2025 6:26:50 PM

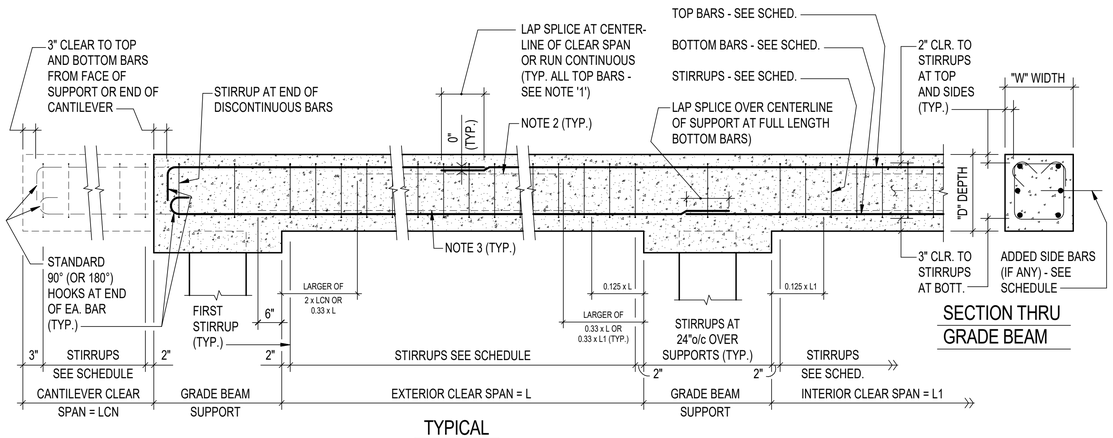

TYPICAL

SECTION THRU GRADE BEAM

TYPICAL CONCRETE GRADE BEAM DETAIL NOTES:

1. WHERE AREA OF TOP BARS IN ADJACENT SPANS DIFFER, CARRY COMBINATION WITH GREATEST AREA TO MIDSPAN OF ADJACENT SPAN.
2. DISCONTINUE 50% MAXIMUM OF TOP BARS WITHIN MIDDLE THIRD OF SPAN TO DIMENSIONS INDICATED. OUTSIDE FACE BARS ARE ALWAYS FULL LENGTH. ALL TOP BARS INDICATED SHALL BE PRESENT AT CANTILEVERS AND OVER SUPPORTS.
3. BOTTOM BARS - ALTERNATE 50% MINIMUM 'LONG' BARS AND 50% MAXIMUM 'SHORT' BARS; OUTSIDE FACE BARS ARE 'LONG' BARS.

CONCRETE GRADE BEAM SCHEDULE

MARK	"W" WIDTH (INCH)	"D" DEPTH (INCH)	TOP BARS		BOTTOM BARS		STIRRUPS		REMARKS
			QUAN.	SIZE	QUAN.	SIZE	SIZE	SPA.	
GB-1	24	24	4	#9	4	#9	#4	9"o/c	---
GB-2	36	24	6	#11	6	#11	#4	9"o/c	---

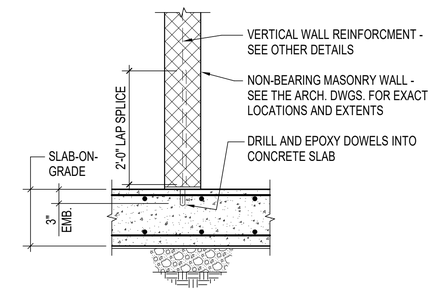

C4 TYPICAL NON-LOAD BEARING MASONRY WALL TO SLAB CONNECTION DETAIL

NOT TO SCALE SOG_Struct_GB

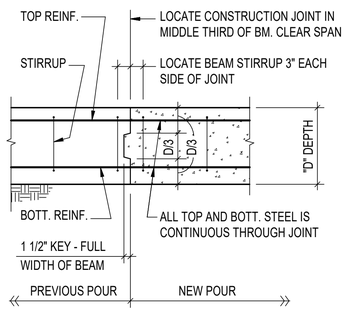

CONSTRUCTION JOINT

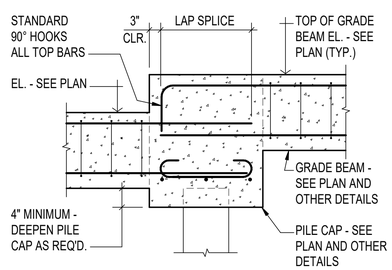

STEPPED FOUNDATION

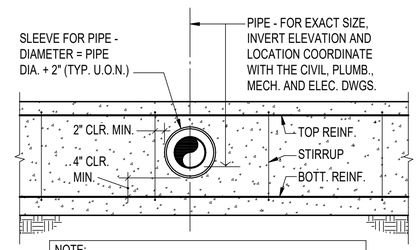

NOTE:
UNDER NO CIRCUMSTANCES MUST ANY TOP OR BOTTOM REINFORCING OR STIRRUPS BE DISCONTINUED TO PLACE PIPE SLEEVES. WHERE SLEEVES CANNOT BE PLACED IN ACCORDANCE WITH THIS DETAIL (OR SHIFTED TO SUIT) IMMEDIATELY CONTACT THE ARCHITECT.
NO PIPE SLEEVES ARE ALLOWED IN PILE CAPS OR WITHIN 3'-0" OF GRADE BEAM SUPPORTS.

PIPE SLEEVE THRU GRADE BEAM

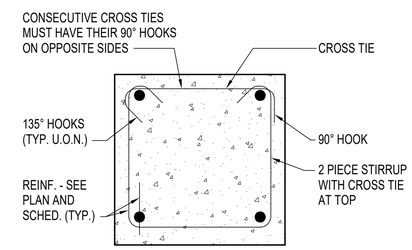

TYPICAL 2 PIECE STIRRUP DETAIL

B1 TYPICAL CONCRETE GRADE BEAM DETAILS

NOT TO SCALE

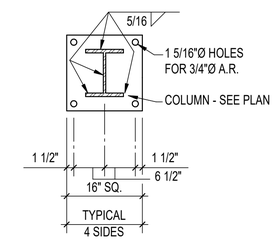

CBP-1

PL3/4x16x16 WITH 4 - 3/4"Ø ANCHOR RODS (9" EMB.)

B5 TYPICAL COLUMN BASE PLATE DETAIL

NOT TO SCALE

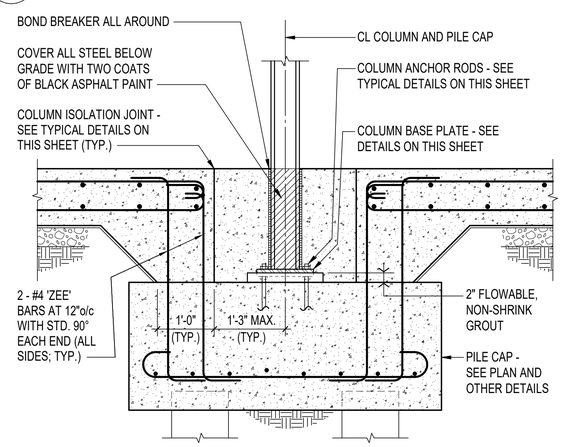

AT PILE CAP

A1 TYPICAL STEEL COLUMN AT FOUNDATION DETAIL

NOT TO SCALE

PLATE WASHER TABLE

ANCHOR ROD DIAMETER	DIMENSIONS
3/4"	1/4" x 2" SQ.

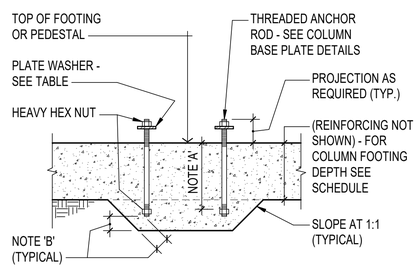

COLUMN ANCHOR ROD DETAIL NOTES:

A. EMBEDMENT - SEE COLUMN BASE PLATE DETAILS

B. DEEPEN FOOTING AS INDICATED AT ANCHOR RODS TO PROVIDE 3" MINIMUM COVERAGE

A2 TYPICAL COLUMN ANCHOR ROD DETAIL

NOT TO SCALE

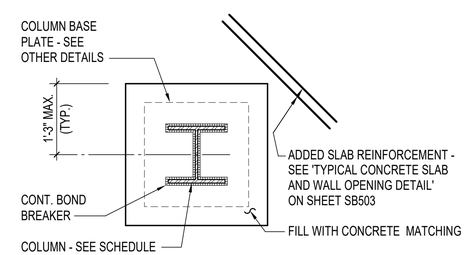

GENERAL CONTRACTOR NOTE :
COLUMN ISOLATION JOINTS ARE OPTIONAL WHEN STRUCTURAL STEEL ERECTION IS COMPLETED PRIOR TO SLAB-ON-GRADE PLACEMENT.

A3 TYPICAL COLUMN ISOLATION JOINT DETAIL

NOT TO SCALE

SPEIGHT·MARSHALL·FRANCIS STRUCTURAL ENGINEERS
1228 PERIMETER PARKWAY, SUITE 201
VIRGINIA BEACH, VIRGINIA 23454
P: 757 427.1020
7814 CAROUSEL LANE SUITE 200
RICHMOND, VIRGINIA 23294
P: 804.464.4111
WWW.SMANDF.CO
SMAF Job No: 20.009-B

NOTE:
IF THIS DRAWING IS LESS THAN 34" X 22"
IT IS A REDUCED SIZE DRAWING

STM	DESCRIPTION	DATE	APPR
	MOD P00006 AND MOD P00007	10/2025	
	MOD P00005	05/2023	

NAVFAC

COMMONWEALTH OF VIRGINIA
EARL H. INGE, JR.
Lic. No. 035522
1/13/2023
PROFESSIONAL ENGINEER

BAMFORTH ENGINEERS + SURVEYORS

AE INFO

APPROVED
FOR COMMANDER NAVFAC 11/21/2022

ACTIVITY
Approved by J. Scott Roberts, Asset Management Branch Head & Supervisory Facility Planner, PWD Beaufort, SC via email.

SATISFACTORY TO DATE 12/15/2022

DES	EHI	DRW	SEC	CHK	DWS
PMDM	KTB / RLH				
BRANCH MANAGER	NEK				
CHIEF ENG/ARCH	EJA				
FP ENGINEER	DSN				

DEPARTMENT OF THE NAVY
NAVAL FACILITIES ENGINEERING SYSTEMS COMMAND ~ MID-ATLANTIC
NORFOLK, VA
DC CORE:
MCAS BEAUFORT
BEAUFORT, SC
P-475 AIRCRAFT MAINTENANCE HANGAR - VOLUME 3 (OSF OPTION)
TYPICAL FOUNDATION DETAILS

SCALE: 3/4" = 1'-0"
EPROJECT NO.: 1363603
CONSTR. CONTR. NO.
NAVFAC DRAWING NO. 12860119
SHEET 918 OF 1412
OSB502

DRAWFORM REVISION: 25 AUGUST 2020

Autodesk Docs://2042 MFA1 S02 F33 Maintenance Hangar/BLDG PR75_OSF 13363603.rvt
11/11/2025 6:08:51 PM

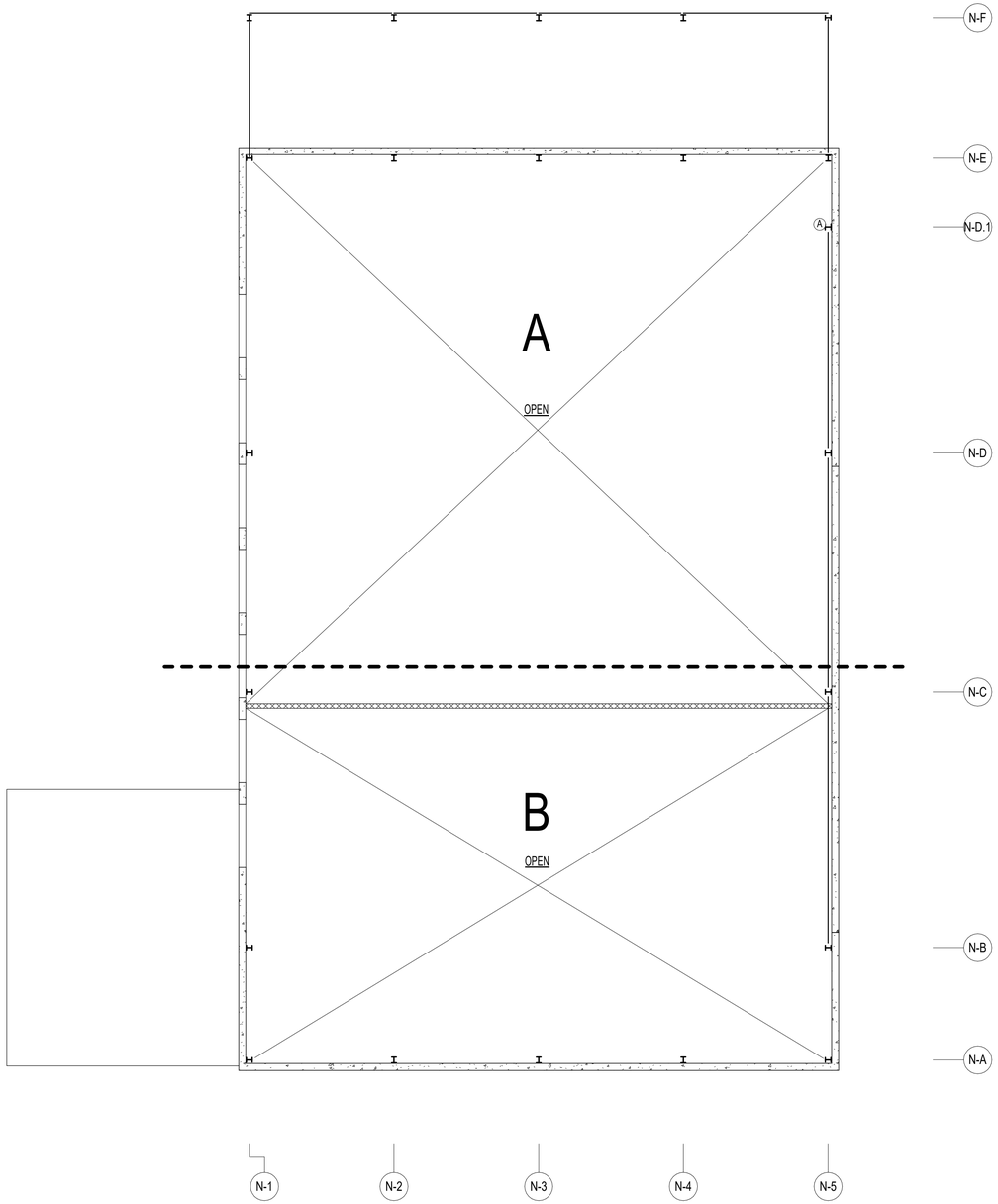

A1 FRAMING PLAN - INTERMEDIATE LEVEL - OVERALL

3/32" = 1'-0"

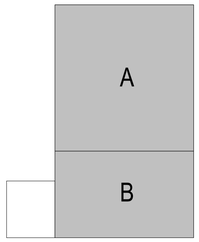

KEYPLAN

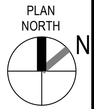

0 5' 10' 20' 30'

1/8" = 1'-0" GRAPHIC SCALE

NOTE:
IF THIS DRAWING IS LESS THAN 34" X 22"
IT IS A REDUCED SIZE DRAWING

SPEIGHT·MARSHALL·FRANCIS
STRUCTURAL ENGINEERS
1228 PERIMETER PARKWAY, SUITE 201
VIRGINIA BEACH, VIRGINIA 23454
P: 757 427.1020
7814 CAROUSEL LANE SUITE 200
RICHMOND, VIRGINIA 23294
P: 804.464.4111
WWW.SMANDF.CO
SMAF Job No: 20.009-B

STM	DESCRIPTION	DATE	APPR
	MOD P00006 AND MOD P00007	10/2025	
	MOD P00005	05/2023	

NAVFAC

COMMONWEALTH OF VIRGINIA
EARL H. INGE, JR.
Lic. No. 035522
1/13/2023
PROFESSIONAL ENGINEER

BAMFORTH
ENGINEERS + SURVEYORS

AE INFO

APPROVED

FOR COMMANDER NAVFAC

ACTIVITY
Approved by J. Scott Roberts,
Asset Management Branch Head &
Supervisory Facility Planner, PWD
Beaufort, SC via email.

SATISFACTORY TO DATE	12/15/2022
DES EHI / DRW SEC / CHK DWS	
PMDM	KTB / RLH
BRANCH MANAGER	NEK
CHIEF ENG/ARCH	EJA
FP ENGINEER	DSN

DEPARTMENT OF THE NAVY
NAVAL FACILITIES ENGINEERING SYSTEMS COMMAND
NAVAL FACILITIES ENGINEERING SYSTEMS COMMAND ~ MID-ATLANTIC
NORFOLK, VA
DC CORE:
MCAS BEAUFORT
BEAUFORT, SC

P-475 AIRCRAFT MAINTENANCE HANGAR - VOLUME 3 (OSF OPTION)

FRAMING PLAN - INTERMEDIATE LEVEL - OVERALL

SCALE:	3/32" = 1'-0"
EPROJECT NO.:	1363603
CONSTR. CONTR. NO.	
NAVFAC DRAWING NO.	12860120
SHEET 919 OF 1412	

OSF101

DRAWFORM REVISION: 25 AUGUST 2020

Autodesk Docs://2042 MFAT 520 F33 Maintenance Hangar/BLDG PKTS_OSF 13538003.rvt
11/11/2025 6:58:52 PM

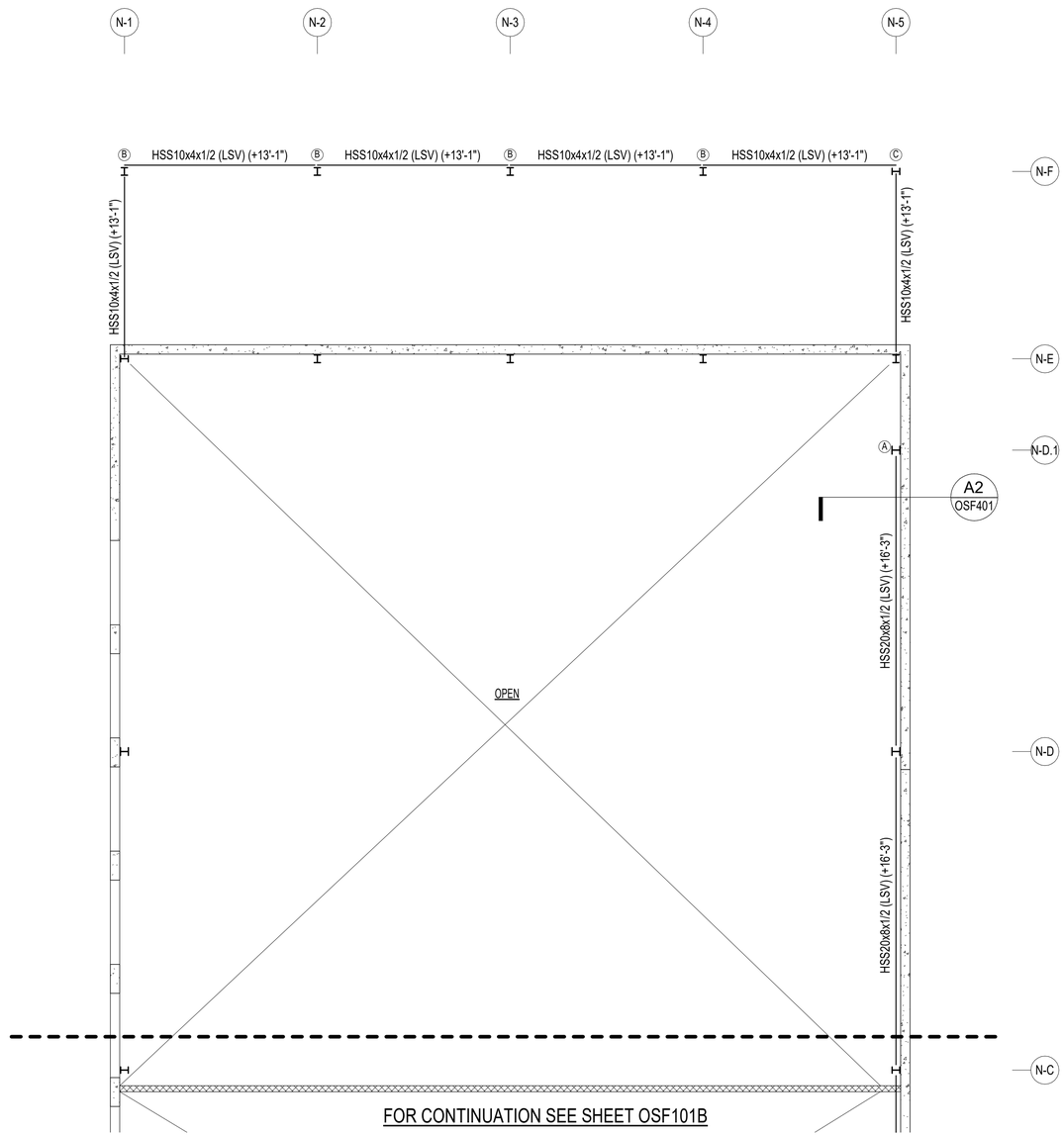

A1 FRAMING PLAN - INTERMEDIATE LEVEL - SECTOR A

1/8" = 1'-0"

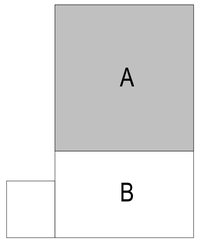

KEYPLAN

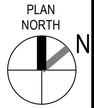

0 ½" 1" 2" 3" 4"

1'-0" = 1'-0" GRAPHIC SCALE

NOTE:
IF THIS DRAWING IS LESS THAN 34" X 22"
IT IS A REDUCED SIZE DRAWING

SPEIGHT·MARSHALL·FRANCIS
STRUCTURAL ENGINEERS
1228 PERIMETER PARKWAY, SUITE 201
VIRGINIA BEACH, VIRGINIA 23454
P: 757.427.1020
7814 CAROUSEL LANE SUITE 200
RICHMOND, VIRGINIA 23294
P: 804.464.4111
WWW.SMANDF.CO
SMMF Job No: 20.009-B

STM	DESCRIPTION	DATE	APPR
	MOD P00006 AND MOD P00007	10/2025	
	MOD P00005	05/2023	

NAVFAC

COMMONWEALTH OF VIRGINIA
EARL H. INGE, JR.
Lic. No. 035522
1/13/2023
PROFESSIONAL ENGINEER

BAMFORTH
ENGINEERS + SURVEYORS

AE INFO

APPROVED
FOR COMMANDER NAVFAC
11/21/2022

ACTIVITY
Approved by J. Scott Roberts,
Asset Management Branch Head &
Supervisory Facility Planner, PWD
Beaufort, SC via email.

SATISFACTORY TO DATE 12/15/2022

DES	EHI	DRW	SEC	CHK	DWS
PM/DM	KTB / RLH				
BRANCH MANAGER	NEK				
CHIEF ENG/ARCH	EJA				
FP ENGINEER	DSN				

DEPARTMENT OF THE NAVY
NAVAL FACILITIES ENGINEERING SYSTEMS COMMAND
DC CODE: NAVAL FACILITIES ENGINEERING SYSTEMS COMMAND ~ MID-ATLANTIC
NORFOLK, VA
MCAS BEAUFORT
BEAUFORT, SC
P-475 AIRCRAFT MAINTENANCE HANGAR - VOLUME 3 (OSF OPTION)
FRAMING PLAN - INTERMEDIATE LEVEL - SECTOR A

SCALE: 1/8" = 1'-0"
EPROJECT NO.: 1363603
CONSTR. CONTR. NO.
NAVFAC DRAWING NO. 12860121
SHEET 920 OF 1412

OSF101A

DRAWFORM REVISION: 25 AUGUST 2020

Autodesk Docs://20042 MIF-A1 002 F35 Maintenance Hangar/BLDG P475_OSF 1363603-S.rvt
11/11/2025 5:54:52 PM

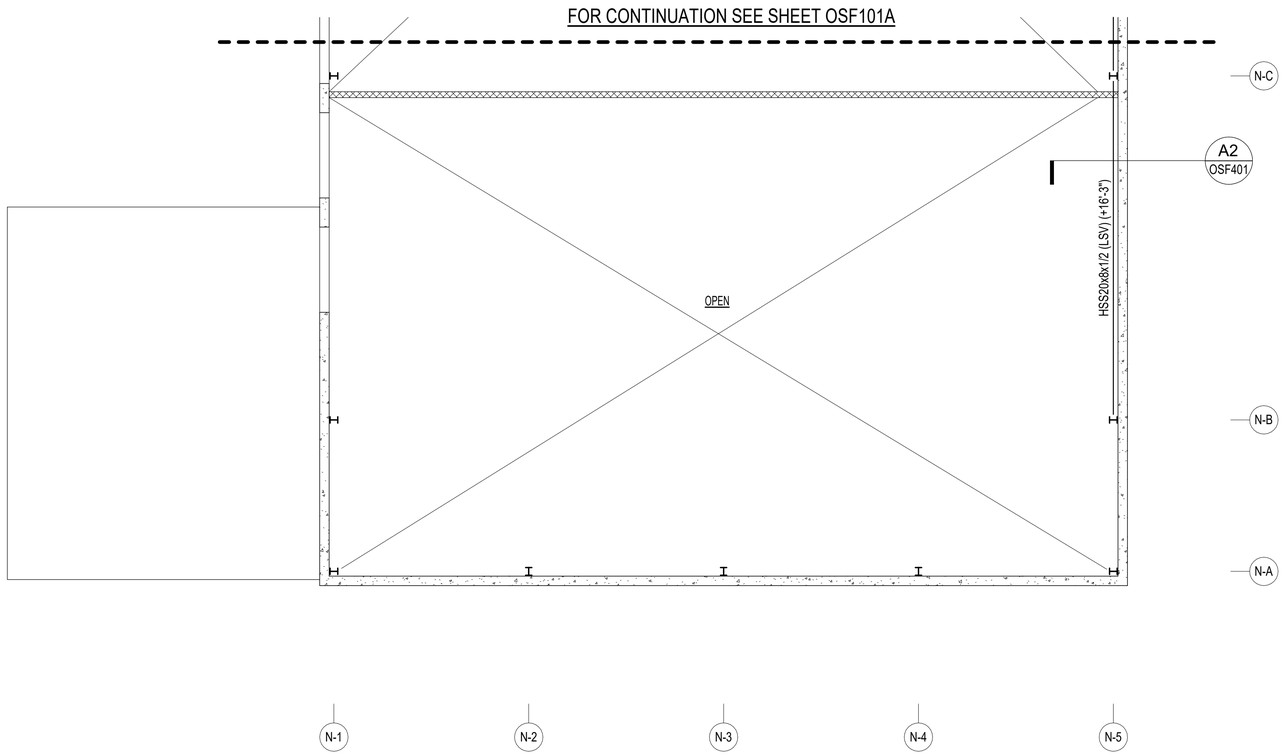

B1 FRAMING PLAN - INTERMEDIATE LEVEL - SECTOR B

1/8" = 1'-0" (FOR PLAN NOTES AND LEGEND SEE SHEET SF101A)

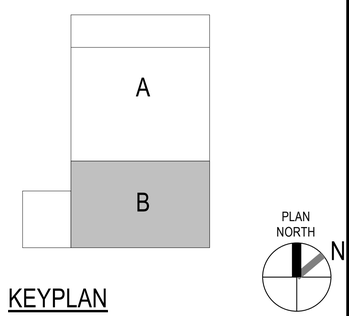

KEYPLAN

0 ½" 1" 2" 3" 4"

1'-0" = 1'-0" GRAPHIC SCALE

NOTE:
IF THIS DRAWING IS LESS THAN 34" X 22"
IT IS A REDUCED SIZE DRAWING

SPEIGHT·MARSHALL·FRANCIS
STRUCTURAL ENGINEERS
1228 PERIMETER PARKWAY, SUITE 201
VIRGINIA BEACH, VIRGINIA 23454
P: 757 427.1020
7814 CAROUSEL LANE SUITE 200
RICHMOND, VIRGINIA 23294
P: 804.464.4111
WWW.SMANDF.CO
SMAF Job No: 20.009-B

STM	DESCRIPTION	DATE	APPR
	MOD P00006 AND MOD P00007	10/2025	
	MOD P00005	05/2023	

NAVFAC

COMMONWEALTH OF VIRGINIA
EARL H. INGE, JR.
Lic. No. 035522
1/13/2023
PROFESSIONAL ENGINEER

BAMFORTH
ENGINEERS + SURVEYORS

AE INFO

APPROVED
FOR COMMANDER NAVFAC

ACTIVITY
Approved by J. Scott Roberts,
Asset Management Branch Head &
Supervisory Facility Planner, PWD
Beaufort, SC via email.

SATISFACTORY TO DATE	12/15/2022
DES EHI / DRW SEC / CHK DWS	
PMDM	KTB / RLH
BRANCH MANAGER	NEK
CHIEF ENG/ARCH	EJA
FP ENGINEER	DSN

DEPARTMENT OF THE NAVY
NAVAL FACILITIES ENGINEERING SYSTEMS COMMAND
NAVAL FACILITIES ENGINEERING SYSTEMS COMMAND ~ MID-ATLANTIC
NORFOLK, VA
DC CORE:
MCAS BEAUFORT
BEAUFORT, SC
P-475 AIRCRAFT MAINTENANCE HANGAR - VOLUME 3 (OSF OPTION)
FRAMING PLAN - INTERMEDIATE LEVEL - SECTOR B

SCALE:	1/8" = 1'-0"
EPROJECT NO.:	1363603
CONSTR. CONTR. NO.	
NAVFAC DRAWING NO.	12860122
SHEET 921 OF 1412	

OSF101B

DRAWFORM REVISION: 25 AUGUST 2020

Autodesk Docs://2042 NAFAT 320 F35 Maintenance Hangar/BLDG PKTS_OSF 13363603.rvt
11/11/2025 6:58:52 PM

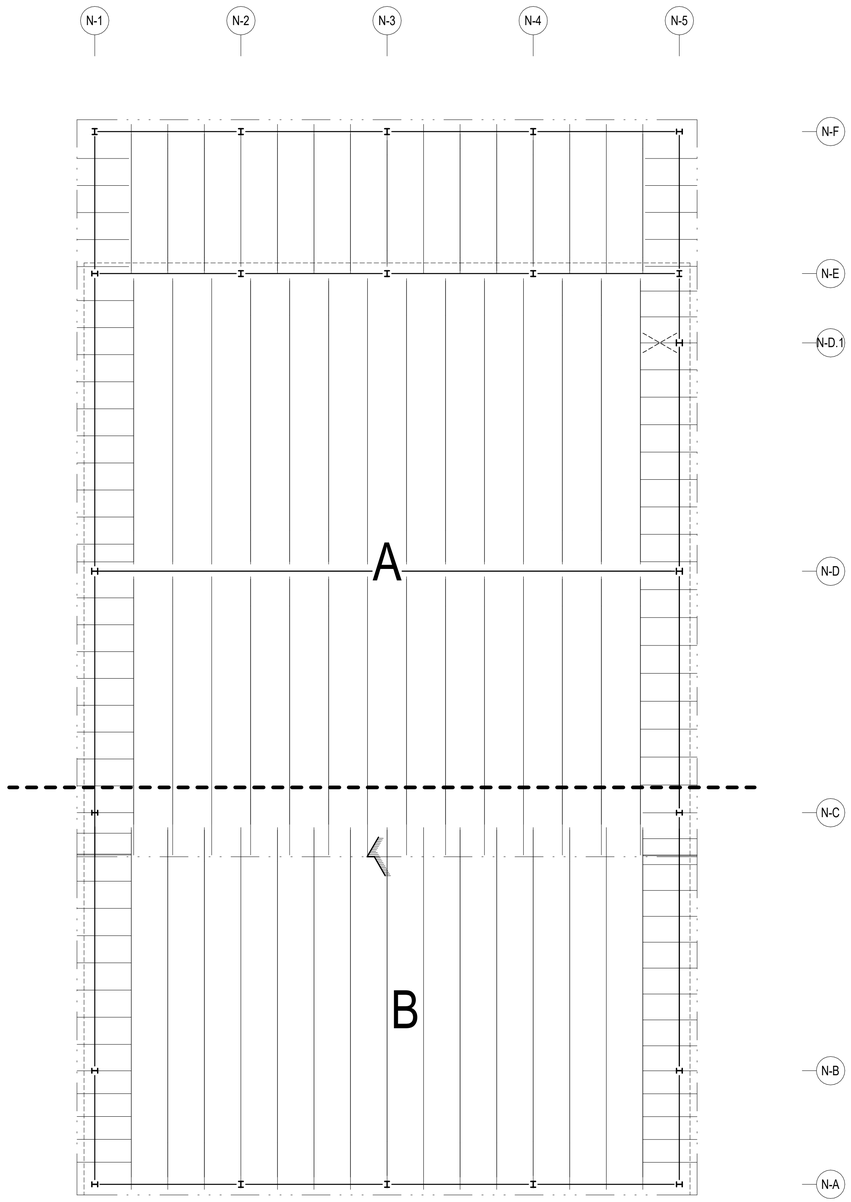

A1 FRAMING PLAN - ROOF - OVERALL

3/32" = 1'-0"

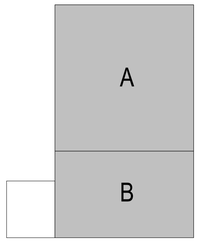

KEYPLAN

SPEIGHT·MARSHALL·FRANCIS
STRUCTURAL ENGINEERS
1228 PERIMETER PARKWAY, SUITE 201
VIRGINIA BEACH, VIRGINIA 23454
P: 757.427.1020
7814 CAROUSEL LANE SUITE 200
RICHMOND, VIRGINIA 23294
P: 804.464.4111
SMMF Job No: 20.009-B
WWW.SMANDF.CO

NOTE:
IF THIS DRAWING IS LESS THAN 34" X 22"
IT IS A REDUCED SIZE DRAWING

STM	DESCRIPTION	DATE	APPR
	MOD P00006 AND MOD P00007	10/2025	
	MOD P00005	05/2023	

NAVFAC

COMMONWEALTH OF VIRGINIA
EARL H. INGE, JR.
Lic. No. 035522
1/13/2023
PROFESSIONAL ENGINEER

BAMFORTH
ENGINEERS + SURVEYORS

AE INFO

APPROVED
FOR COMMANDER NAVFAC 11/21/2022

ACTIVITY
Approved by J. Scott Roberts,
Asset Management Branch Head &
Supervisory Facility Planner, PWD
Beaufort, SC via email.

SATISFACTORY TO DATE 12/15/2022

DES EHI	DRW SEC	CHK DWS	
PM/DM	KTB / RLH		
BRANCH MANAGER	NEK		
CHIEF ENG/ARCH	EJA		
FP ENGINEER	DSN		

DEPARTMENT OF THE NAVY
NAVAL FACILITIES ENGINEERING SYSTEMS COMMAND
DC CORE
NAVAL FACILITIES ENGINEERING SYSTEMS COMMAND ~ MID-ATLANTIC
NORFOLK, VA
MCAS BEAUFORT
BEAUFORT, SC
P-475 AIRCRAFT MAINTENANCE HANGAR - VOLUME 3 (OSF OPTION)
FRAMING PLAN - ROOF - OVERALL

SCALE: 3/32" = 1'-0"
EPROJECT NO.: 1363603
CONSTR. CONTR. NO.
NAVFAC DRAWING NO. 12860123
SHEET 922 OF 1412

OSF102

DRAWFORM REVISION: 25 AUGUST 2020

Autodesk Docs://20240_NAFA T 502 F35 Maintenance Hangar/BLDG PH75_OSF 1983903-S.rvt
11/11/2025 6:58:52 PM

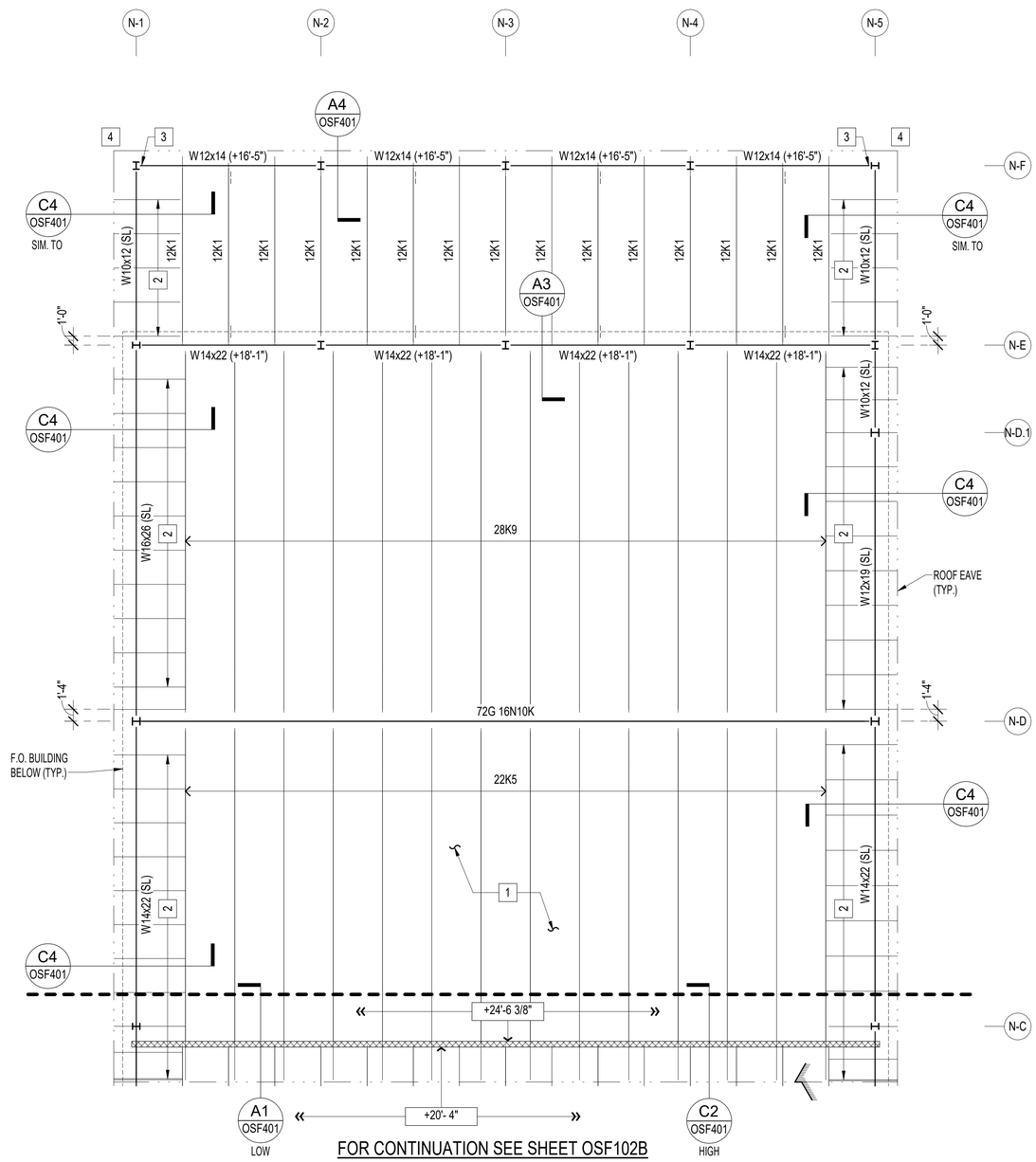

FOR CONTINUATION SEE SHEET OSF102B

A1 FRAMING PLAN - ROOF - SECTOR A

1/8" = 1'-0"

GENERAL FRAMING PLAN NOTES :

A. SEE THE DIMENSION PLAN ON SHEET OSB101 AND THE ARCHITECTURAL DRAWINGS FOR DIMENSIONS NOT SHOWN. SEE THE ARCHITECTURAL DRAWINGS FOR LOCATIONS OF MASONRY CONTROL JOINTS AND PRECAST CONCRETE DETAILS

B. FOR THE STRUCTURAL NOTES AND ABBREVIATIONS SEE SHEETS OSB001 AND OSB002.

C. ROOF ACCESS - SEE THE ARCHITECTURAL DRAWINGS FOR SIZE, LOCATION AND ADDITIONAL INFORMATION.

D. CMU WALL BELOW TO UNDERSIDE OF DECK. SEE 'TYPICAL NON-BEARING MASONRY WALL BRACING DETAILS' ON SHEET OSF504.

X FRAMING PLAN KEY NOTES :

1. ROOF JOISTS AND OTHER ROOF DECK SUPPORTS MUST BE SPACED EQUALLY BETWEEN GIVEN LOCATIONS, WITH A MAXIMUM SPACING OF 5'-6" ON-CENTER, UNLESS OTHERWISE NOTED.

2. HSS2 1/2 x 2 1/x2 x 1/4 OUTLOOKERS AT COLUMN AND 4'-0" ON-CENER MAXIMUM SPACING BETWEEN COLUMNS.

3. CONTINUE HSS2 1/2 BETWEEN JOIST TO END OF JOIST BEYOND.

4. MITRE DECK EDGE ANGLES AT CORNERS AND CONNET VERTICAL AND HORIZONTAL LEGS TOGETHER WITH 2" OF BUTT WELD.

FRAMING PLAN LEGEND :

+XX'-XX"	=	JOIST BEARING ELEVATION (J.B.E) - MEASURED FROM REFERENCE ELEVATION 0'-0"
(+XX'-XX")	=	TOP OF STEEL (T.O.S.) ELEVATION - MEASURED FROM REFERENCE ELEVATION 0'-0" (HI = HIGH; LO = LOW; SL = SLOPE)
X	=	COLUMN GRID MARK
X	=	SPECIAL CONNECTION MARK - SEE DETAILS ON SHEET OSF502
	=	DIAGONAL BRACE TO BEAM BOTTOM FLANGE - SEE TYPICAL DETAIL ON SHEET OSF503

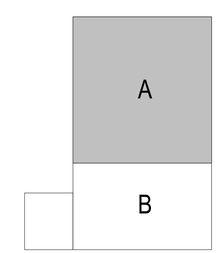

KEYPLAN

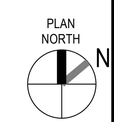

0 ½" 1" 2" 3" 4"

1'-0" = 1'-0" GRAPHIC SCALE

NOTE:
IF THIS DRAWING IS LESS THAN 34" X 22"
IT IS A REDUCED SIZE DRAWING

SPEIGHT·MARSHALL·FRANCIS
STRUCTURAL ENGINEERS
1228 PERIMETER PARKWAY, SUITE 201
VIRGINIA BEACH, VIRGINIA 23454
P: 757.427.1020
7814 CAROUSEL LANE SUITE 200
RICHMOND, VIRGINIA 23294
P: 804.464.4111
SMM Job No: 20.009-B
WWW.SMANDF.CO

STM	DESCRIPTION	DATE	APPR
	MOD P00006 AND MOD P00007	10/2025	
	MOD P00005	05/2023	

NAVFAC

COMMONWEALTH OF VIRGINIA
EARL H. INGE, JR.
Lic. No. 035522
1/13/2023
PROFESSIONAL ENGINEER

BAMFORTH
ENGINEERS + SURVEYORS
AE INFO

APPROVED
FOR COMMANDER NAVFAC

ACTIVITY
Approved by J. Scott Roberts,
Asset Management Branch Head &
Supervisory Facility Planner, PWD
Beaufort, SC via email.

SATISFACTORY TO DATE	12/15/2022
DES EHI / DRW SEC / CHK DWS	
PM/DM	KTB / RLH
BRANCH MANAGER	NEK
CHIEF ENG/ARCH	EJA
FP ENGINEER	DSN

DEPARTMENT OF THE NAVY
NAVAL FACILITIES ENGINEERING SYSTEMS COMMAND
DC CORE:
MCAS BEAUFORT
NAVAL FACILITIES ENGINEERING SYSTEMS COMMAND ~ MID-ATLANTIC
NORFOLK, VA
BEAUFORT, SC
P-475 AIRCRAFT MAINTENANCE HANGAR - VOLUME 3 (OSF OPTION)
FRAMING PLAN - ROOF - SECTOR A

SCALE:	As indicated
EPROJECT NO.:	1363603
CONSTR. CONTR. NO.	
NAVFAC DRAWING NO.	12860124
SHEET	923 OF 1412

OSF102A

DRAWFORM REVISION: 25 AUGUST 2020

Autodesk Docs://20242 \MF-A1 D20 F35 Maintenance Hangar/BLDG P475_OSF 18.3003.5.rvt
11/11/2025 6:56:53 PM

FOR CONTINUATION SEE SHEET OSF102A

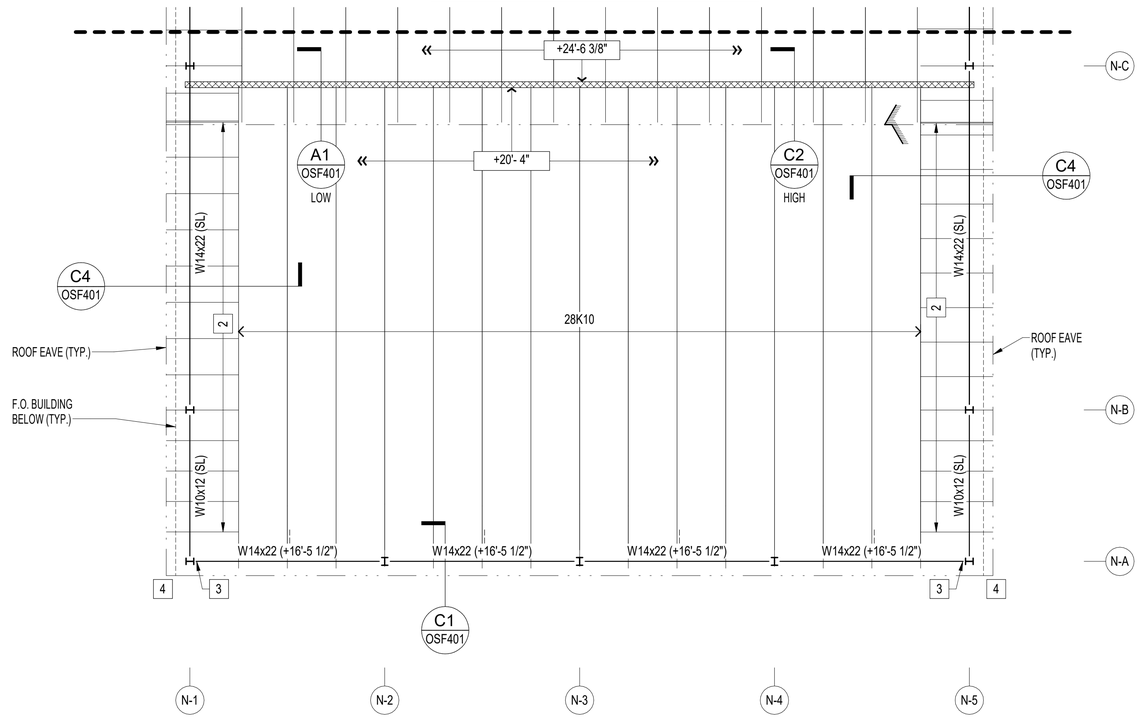

B1 FRAMING PLAN - ROOF - SECTOR B

1/8" = 1'-0" (FOR PLAN NOTES AND LEGEND SEE SHEET SF102A)

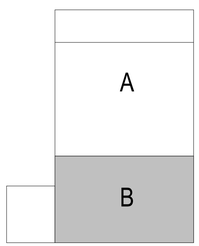

KEYPLAN

0 ½" 1" 2" 3" 4"

1'-0" = 1'-0" GRAPHIC SCALE

NOTE:
IF THIS DRAWING IS LESS THAN 34" X 22"
IT IS A REDUCED SIZE DRAWING

SPEIGHT·MARSHALL·FRANCIS
STRUCTURAL ENGINEERS
1228 PERIMETER PARKWAY, SUITE 201
VIRGINIA BEACH, VIRGINIA 23454
P: 757.427.1020
7814 CAROUSEL LANE SUITE 200
RICHMOND, VIRGINIA 23294
P: 804.464.4111
SMF Job No: 20.009-B
WWW.SMANDF.CO

STM	DESCRIPTION	DATE	APPR
	MOD P00006 AND MOD P00007	10/2025	
	MOD P00005	05/2023	

NAVFAC

COMMONWEALTH OF VIRGINIA
EARL H. INGE, JR.
Lic. No. 035522
1/13/2023
PROFESSIONAL ENGINEER

BAMFORTH ENGINEERS + SURVEYORS

AE INFO

APPROVED

FOR COMMANDER NAVFAC

ACTIVITY:
Approved by J. Scott Roberts,
Asset Management Branch Head &
Supervisory Facility Planner, PWD
Beaufort, SC via email.

SATISFACTORY TO DATE 12/15/2022

DES	EHI	DRW	SEC	CHK	DWS

PM/DM KTB / RLH
BRANCH MANAGER NEK
CHIEF ENG/ARCH EJA
FP ENGINEER DSN

DEPARTMENT OF THE NAVY
NAVAL FACILITIES ENGINEERING SYSTEMS COMMAND
DC CORE
NAVAL FACILITIES ENGINEERING SYSTEMS COMMAND – MID-ATLANTIC
NORFOLK, VA
MCAS BEAUFORT
BEAUFORT, SC
P-475 AIRCRAFT MAINTENANCE HANGAR - VOLUME 3 (OSF OPTION)
FRAMING PLAN - ROOF - SECTOR B

SCALE: 1/8" = 1'-0"
EPROJECT NO.: 1363603
CONSTR. CONTR. NO.
NAVFAC DRAWING NO. 12860125
SHEET 924 OF 1412

OSF102B

DRAWFORM REVISION: 25 AUGUST 2020

Autodesk Docs://20042 MFA1 502 F33 Maintenance Hangar/BLDG PH25_OSF 1363603-S.rvt
11/11/2025 6:58:53 PM

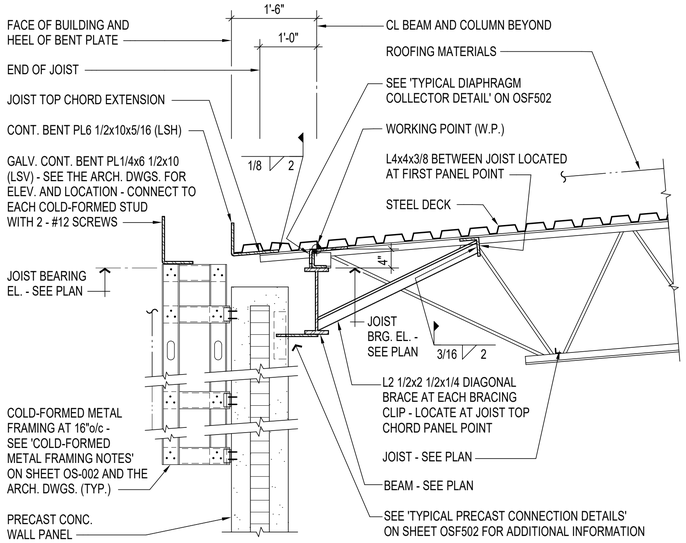

C1 SECTION
3/4" = 1'-0"

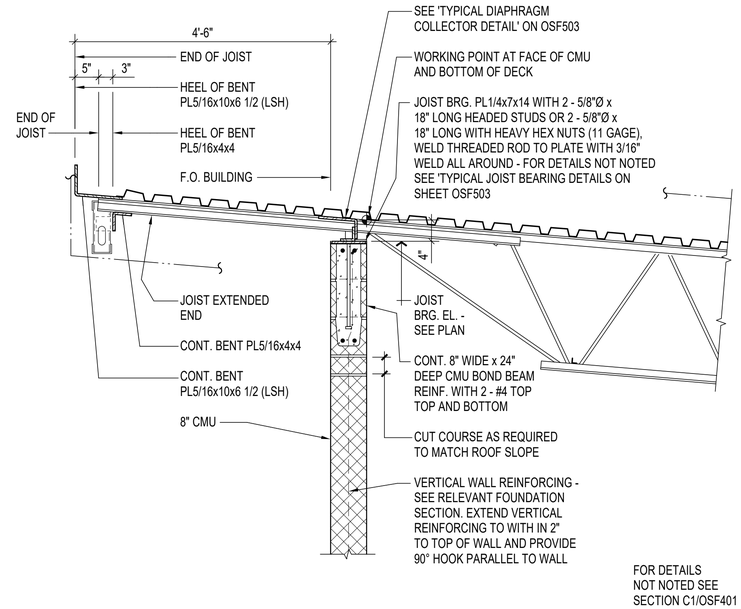

C2 SECTION
3/4" = 1'-0"

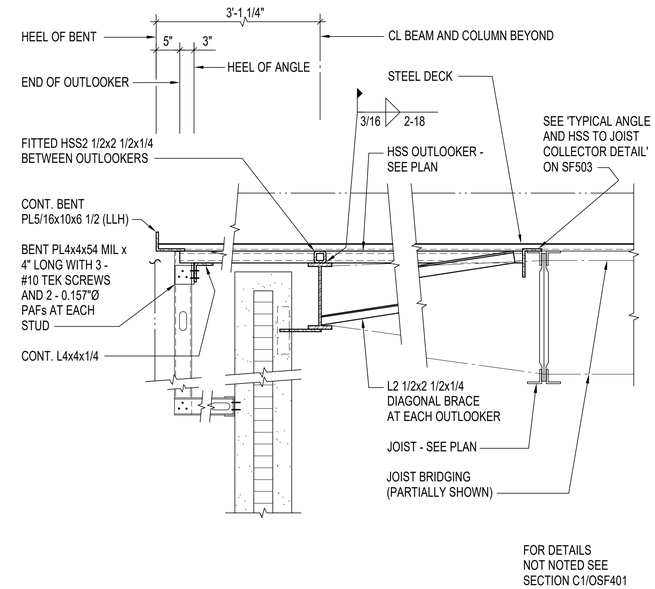

C4 SECTION
3/4" = 1'-0"

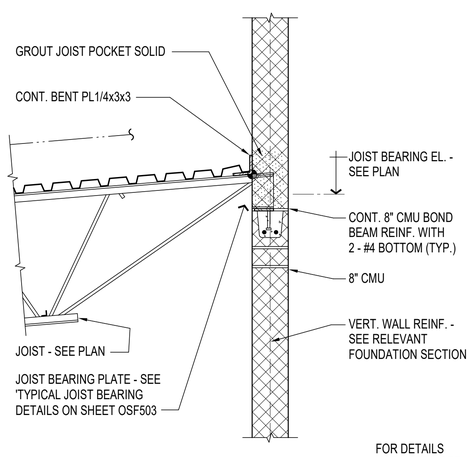

A1 SECTION
3/4" = 1'-0"

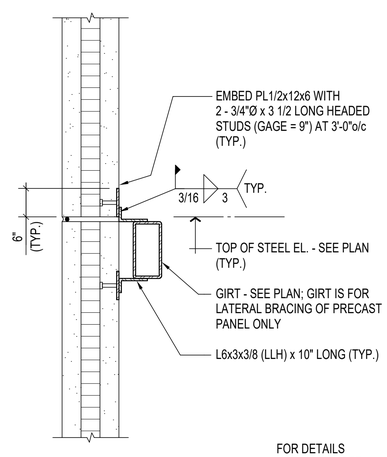

A2 SECTION
3/4" = 1'-0"

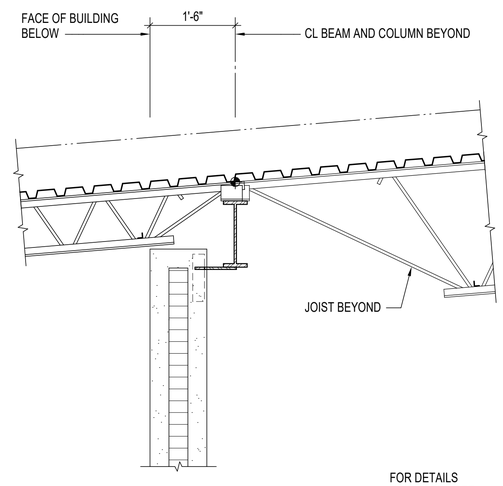

A3 SECTION
3/4" = 1'-0"

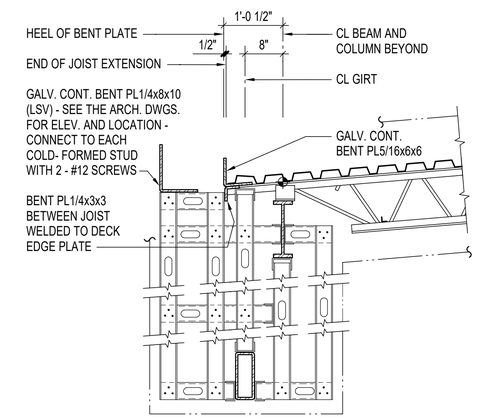

A4 SECTION
3/4" = 1'-0"

PLAN NORTH
N

0 ½" 1" 2" 3" 4"
1'-0" = 1'-0" GRAPHIC SCALE

NOTE:
IF THIS DRAWING IS LESS THAN 34" X 22"
IT IS A REDUCED SIZE DRAWING

SPEIGHT·MARSHALL·FRANCIS
STRUCTURAL ENGINEERS
1228 PERIMETER PARKWAY, SUITE 201
VIRGINIA BEACH, VIRGINIA 23454
P: 757 427.1020
7814 CAROUSEL LANE SUITE 200
RICHMOND, VIRGINIA 23294
P: 804.464.4111
WWW.SMANDF.CO
SMAF Job No: 20.009-B

SYM	DESCRIPTION	DATE	APPR
	MOD P00006 AND MOD P00007	10/2025	
	MOD P00005	05/2023	

NAVFAC

COMMONWEALTH OF VIRGINIA
EARL H. INGE, JR.
Lic. No. 035522
1/13/2023
PROFESSIONAL ENGINEER

BAMFORTH ENGINEERS + SURVEYORS

AE INFO
APPROVED
FOR COMMANDER NAVFAC
ACTIVITY
Approved by J. Scott Roberts, Asset Management Branch Head & Supervisory Facility Planner, PWD Beaufort, SC via email.
SATISFACTORY TO DATE 12/15/2022

DES	EHI	DRW SEC	CHK DWS
PMDM			KTB / RLH
BRANCH MANAGER			NEK
CHIEF ENG/ARCH			EJA
FP ENGINEER			DSN

DEPARTMENT OF THE NAVY
NAVAL FACILITIES ENGINEERING SYSTEMS COMMAND ~ MID-ATLANTIC
NORFOLK, VA
DC CORE:
MCAS BEAUFORT
BEAUFORT, SC
P-475 AIRCRAFT MAINTENANCE HANGAR - VOLUME 3 (OSF OPTION)
FRAMING SECTIONS

SCALE: 3/4" = 1'-0"
EPROJECT NO.: 1363603
CONSTR. CONTR. NO.
NAVFAC DRAWING NO.: 12860126
SHEET 925 OF 1412
OSF401

DRAWFORM REVISION: 25 AUGUST 2020

Autodesk Docs://2042 NAFAT 320 F35 Maintenance Hangar/BLDG PKTS_OSF 13363603.rvt
11/11/2025 6:08:54 PM

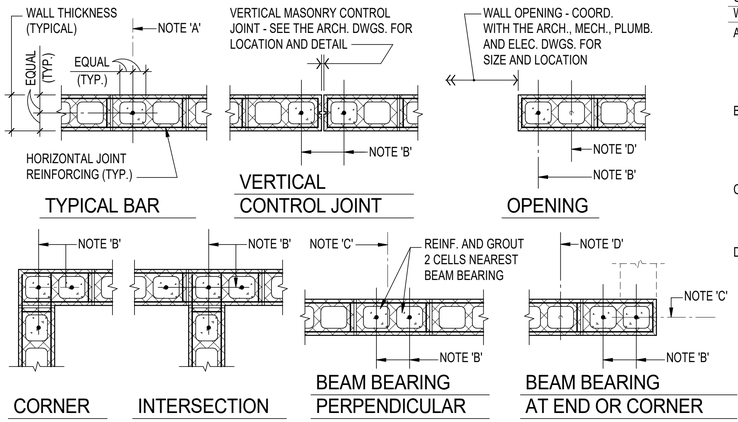

CONCRETE MASONRY VERTICAL WALL REINFORCING DETAIL NOTES:

A. VERTICAL WALL REINFORCING BAR AS SPECIFIED. SEE OTHER DETAILS AND SECTIONS FOR SIZE AND SPACING.

B. VERTICAL WALL REINFORCING BAR AS SPECIFIED (#4 BAR WHERE NOT OTHERWISE SPECIFIED).

C. CENTERLINE OF BEAM/GIRDER ABOVE, SEE FRAMING PLANS FOR EXACT LOCATION.

D. ADDITIONAL VERTICAL WALL REINFORCING BARS MAY BE REQUIRED, SEE PLANS AND OTHER DETAILS.

C1 TYPICAL CONCRETE MASONRY VERTICAL WALL REINFORCEMENT DETAIL

NOT TO SCALE

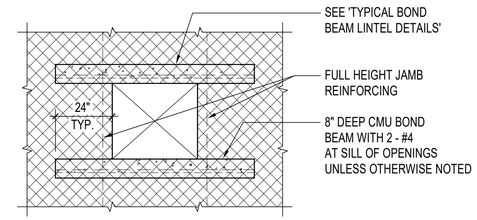

C3 TYPICAL REINFORCEMENT AT MASONRY WALL OPENING DETAIL

NOT TO SCALE

BOND BEAM LINTEL SCHEDULE		
CLEAR SPAN	DEPTH "D"	REINFORCING
		8" AND 10" WIDE
0 TO 3'-4"	8"	2 - #4 BOTTOM
3'-5" TO 5'-4"	8"	2 - #5 BOTTOM
5'-5" TO 6'-8"	16"	2 - #5 BOTTOM
6'-9" TO 8'-0"	16"	2 - #5 TOP AND BOTT.

BOND BEAM LINTEL SCHEDULE NOTES:

A. PROVIDE 8" CMU BEARING EACH END OF LINTEL.

B. FOR EXACT SIZE AND LOCATION OF ALL WALL OPENINGS COORDINATE WITH ARCHITECTURAL, MECHANICAL, PLUMBING AND ELECTRICAL DRAWINGS.

C. SEE ARCHITECTURAL DRAWINGS FOR WIDTH OF WALL AND REQUIRED WIDTH OF LINTEL, IF DIFFERENT FROM WIDTH OF WALL.

D. BOND BEAM LINTEL SCHEDULE APPLIES ONLY TO LINTELS NOT OTHERWISE SHOWN ON THE DRAWINGS.

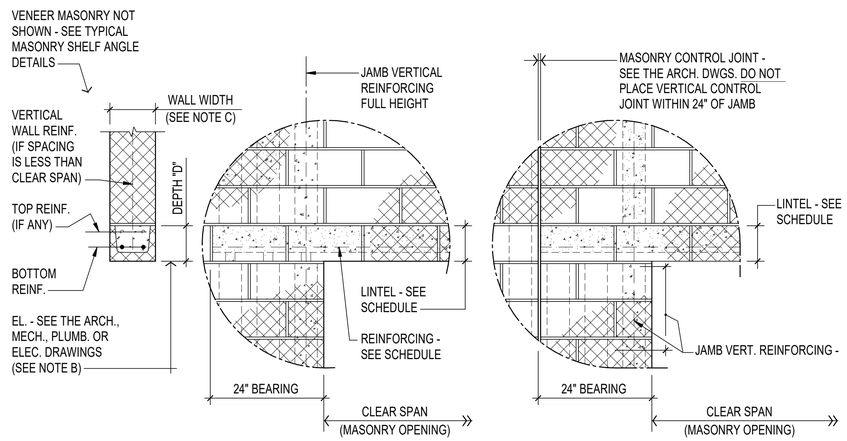

B1 TYPICAL BOND BEAM LINTEL DETAILS

NOT TO SCALE

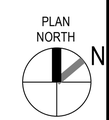

0 ½" 1" 2" 3" 4"

1'-0" = 1'-0" GRAPHIC SCALE

NOTE:
IF THIS DRAWING IS LESS THAN 34" X 22"
IT IS A REDUCED SIZE DRAWING

SPEIGHT·MARSHALL·FRANCIS STRUCTURAL ENGINEERS
1228 PERIMETER PARKWAY, SUITE 201
VIRGINIA BEACH, VIRGINIA 23454
P: 757.427.1020
7814 CAROUSEL LANE SUITE 200
RICHMOND, VIRGINIA 23294
P: 804.464.4111
SMF Job No: 20.009-B
WWW.SMANDF.CO

STM	DESCRIPTION	DATE	APPR
	MOD P00006 AND MOD P00007	10/2025	
	MOD P00005	05/2023	

NAVFAC

COMMONWEALTH OF VIRGINIA
EARL H. INGE, JR.
Lic. No. 035522
1/13/2023
PROFESSIONAL ENGINEER

BAMFORTH ENGINEERS + SURVEYORS

AE INFO

APPROVED
FOR COMMANDER NAVFAC 11/21/2022

ACTIVITY: Approved by J. Scott Roberts, Asset Management Branch Head & Supervisory Facility Planner, PWD Beaufort, SC via email.

SATISFACTORY TO DATE 12/15/2022

DES	EHI	DRW	SEC	CHK	DWS
PM/DM	KTB / RLH				
BRANCH MANAGER	NEK				
CHIEF ENG/ARCH	EJA				
FP ENGINEER	DSN				

DEPARTMENT OF THE NAVY
DC CORE
NAVAL FACILITIES ENGINEERING SYSTEMS COMMAND
NAVAL FACILITIES ENGINEERING SYSTEMS COMMAND ~ MID-ATLANTIC
NORFOLK, VA
MCAS BEAUFORT
BEAUFORT, SC
P-475 AIRCRAFT MAINTENANCE HANGAR - VOLUME 3 (OSF OPTION)
TYPICAL FRAMING DETAILS

SCALE: 3/4" = 1'-0"
EPROJECT NO.: 1363603
CONSTR. CONTR. NO.
NAVFAC DRAWING NO. 12860127
SHEET 926 OF 1412

OSF501

DRAWFORM REVISION: 25 AUGUST 2020

Autodesk Docs://20042 MFA T 502 F35 Maintenance Hangar/BLDG PHTS_OSF 1363603-S.rvt
11/11/2025 6:58:54 PM

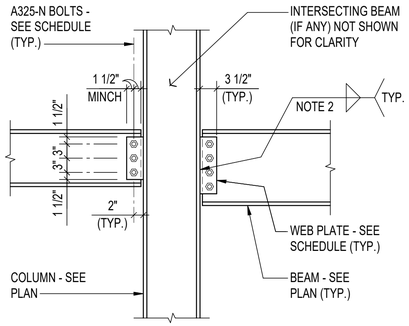

BEAM TO W-SHAPED COLUMNS - BEAMS PERPENDICULAR TO FLANGE

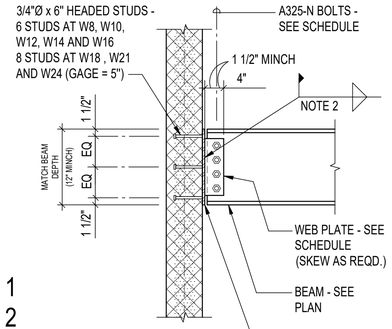

1
2

AT CMU WALL

BEAM TO EMBED PLATES

WEB PLATE CONNECTION SCHEDULE			
MAXIMUM BEAM SIZE IN EACH BEAM DEPTH GROUP	WEB PLATE THICKNESS	A325-N BOLTS	
		QUANTITY	SIZE
W10	3/8"	2	3/4"Ø
W12	3/8"	3	3/4"Ø
W14	3/8"	3	3/4"Ø
W16	3/8"	4	3/4"Ø
W18	3/8"	5	3/4"Ø
W21	3/8"	6	3/4"Ø
W24	3/8"	7	3/4"Ø

WEB PLATE CONNECTION NOTES:

1. BOLT EDGE DISTANCE SHALL BE 1 1/2" MINCH AT ALL EDGES. BOLT SPACING SHALL BE 3" MINCH
2. FILLET WELDS SHALL BE 3/4 OF THE PLATE THICKNESS (1/4" MINCH) EACH SIDE.
3. THICKNESS EQUALS FLANGE THICKNESS OF BEAM FRAMING INTO COLUMN WEB (3/8" MINCH).

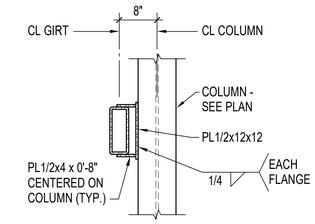

TYPE C

NOTE: INTERSECTING BEAMS, INTERSECTING JOISTS, STEEL DECK, METAL STUDS AND MASONRY NOT SHOWN FOR CLARITY, COORDINATE WITH OTHER DETAILS AND THE ARCH. DWGS.

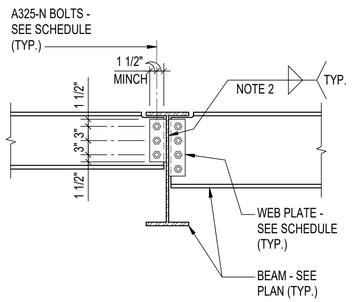

BEAM TO BEAM

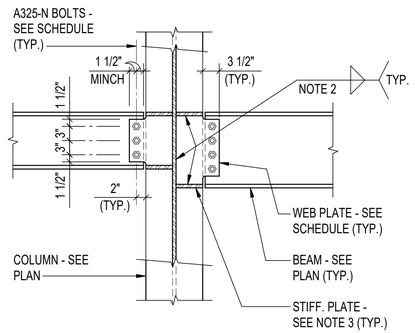

BEAM TO W-SHAPED COLUMNS - BEAMS PARALLEL TO FLANGE

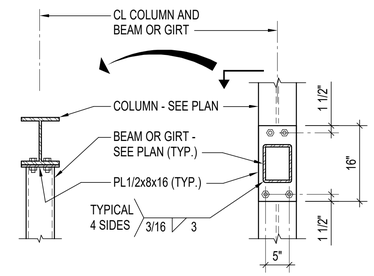

TYPE A

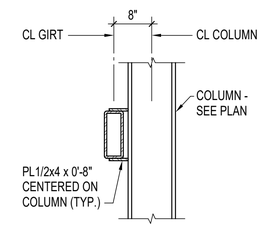

TYPE B

B1 TYPICAL BOLTED WEB PLATE CONNECTION DETAILS

NOT TO SCALE

B4 SPECIAL CONNECTION DETAIL

NOT TO SCALE

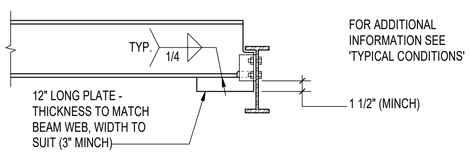

CONDITION WITH BEAM DEPTH EXTENDED

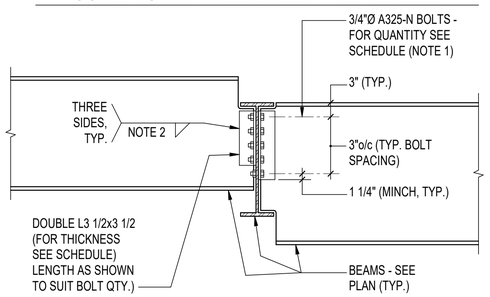

TYPICAL CONDITIONS

BOLTED DOUBLE ANGLE CONNECTION SCHEDULE		
BEAM SIZE	MINCH ANGLE THICKNESS	MINCH BOLT QUANTITY
W10	5/16"	2
W12	5/16"	2
W14	5/16"	2
W16	5/16"	3

DOUBLE ANGLE CONNECTION NOTES :

1. BOLT QUANTITY SHOWN IS MINIMUM NUMBER REQUIRED ON EACH SIDE OF BEAM WEB.
2. FILLET WELDS SHALL BE 3/4 OF THE ANGLE THICKNESS (1/4" MINCH).

THESE DETAILS ARE APPLICABLE AT CONNECTIONS WHERE THERE IS INSUFFICIENT DEPTH AT THE BEAM TO BEAM CONNECTION TO ALLOW USE OF A BOLTED WEB PLATE CONNECTION AS SHOWN IN THE DETAILS ON THIS SHEET AND NO OTHER CONNECTION IS SPECIFIED.

A1 TYPICAL BOLTED DOUBLE ANGLE BEAM TO BEAM CONNECTION DETAILS

NOT TO SCALE

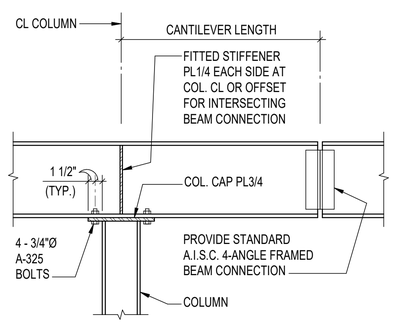

A3 TYPICAL CANTILEVER BEAM TO COLUMN CONNECTION DETAIL

NOT TO SCALE

PLAN NORTH

N

0 ½" 1" 2" 3" 4"

1'-0" = 1'-0" GRAPHIC SCALE

NOTE:
IF THIS DRAWING IS LESS THAN 34" X 22"
IT IS A REDUCED SIZE DRAWING

SPEIGHT·MARSHALL·FRANCIS STRUCTURAL ENGINEERS
1228 PERIMETER PARKWAY, SUITE 201
VIRGINIA BEACH, VIRGINIA 23454
P: 757.427.1020
7814 CAROUSEL LANE SUITE 200
RICHMOND, VIRGINIA 23294
P: 804.464.4111
WWW.SMANDF.CO
SMAF Job No: 20.009-B

STM	DESCRIPTION	DATE	APPR
	MOD P00006 AND MOD P00007	10/2025	
	MOD P00005	05/2023	

NAVFAC

COMMONWEALTH OF VIRGINIA
EARL H. INGE, JR.
Lic. No. 035522
1/13/2023
PROFESSIONAL ENGINEER

BAMFORTH ENGINEERS + SURVEYORS

AE INFO

APPROVED

FOR COMMANDER NAVFAC

ACTIVITY: Approved by J. Scott Roberts, Asset Management Branch Head & Supervisory Facility Planner, PWD Beaufort, SC via email.

SATISFACTORY TO DATE 12/15/2022

DES EHI	DRW SEC	CHK DWS	
PM/DM	KTB / RLH		
BRANCH MANAGER	NEK		
CHIEF ENG/ARCH	EJA		
FP ENGINEER	DSN		

DEPARTMENT OF THE NAVY
NAVAL FACILITIES ENGINEERING SYSTEMS COMMAND
DC CORE: MCAS BEAUFORT
NAVAL FACILITIES ENGINEERING SYSTEMS COMMAND – MID-ATLANTIC
NORFOLK, VA

BEAUFORT, SC
P-475 AIRCRAFT MAINTENANCE HANGAR - VOLUME 3 (OSF OPTION)

TYPICAL FRAMING DETAILS

SCALE: 3/4" = 1'-0"
EPROJECT NO.: 1363603
CONSTR. CONTR. NO.
NAVFAC DRAWING NO. 12860128
SHEET 927 OF 1412

OSF502

DRAWFORM REVISION: 25 AUGUST 2020

Autodesk Docs://0042 \MF-FJ 320 F35 Maintenance Hangar/BLDG P475_OSF 1363603.rvt
11/11/2025 6:54:54 PM

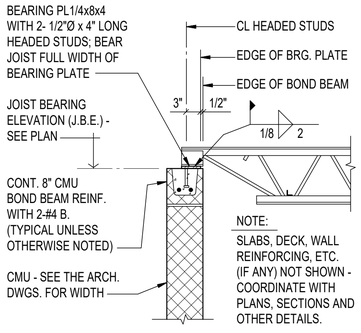

'K' SERIES JOIST BEARING ON CMU WALL (ONE SIDE)

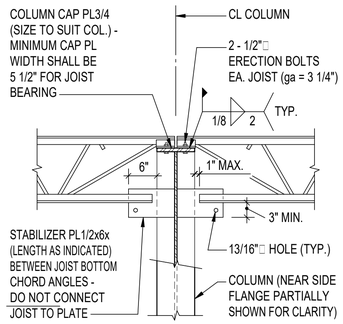

'K' SERIES ROOF JOIST TO W-SHAPE COLUMN WEB

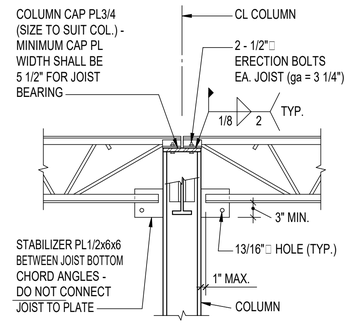

'K' SERIES ROOF JOIST TO W-SHAPE COLUMN FLANGE

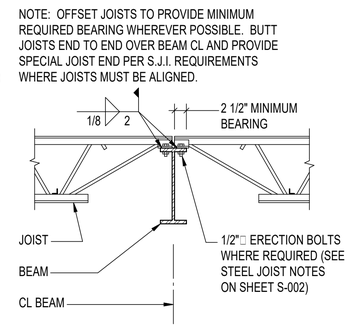

'LH' SERIES JOIST TO BEAM

C1 TYPICAL JOIST BEARING DETAILS

NOT TO SCALE

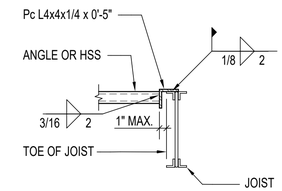

C4 TYPICAL HSS OR ANGLE TO JOIST CONNECTION DETAIL

NOT TO SCALE

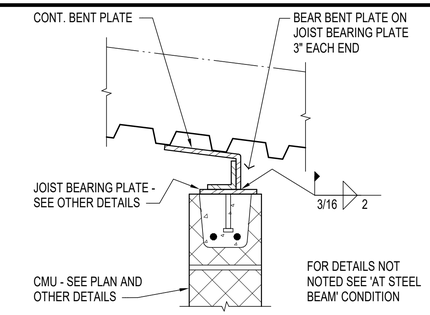

AT CMU BEARING

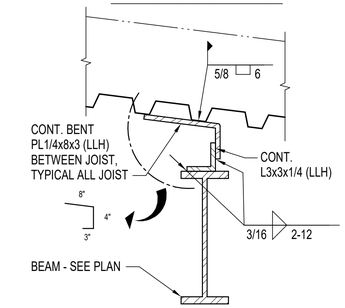

AT STEEL BEAM

C5 TYPICAL DIAPHRAGM COLLECTOR DETAIL

NOT TO SCALE

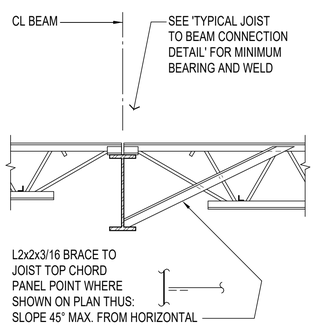

A1 TYPICAL BEAM BOTTOM FLANGE BRACE DETAIL

NOT TO SCALE

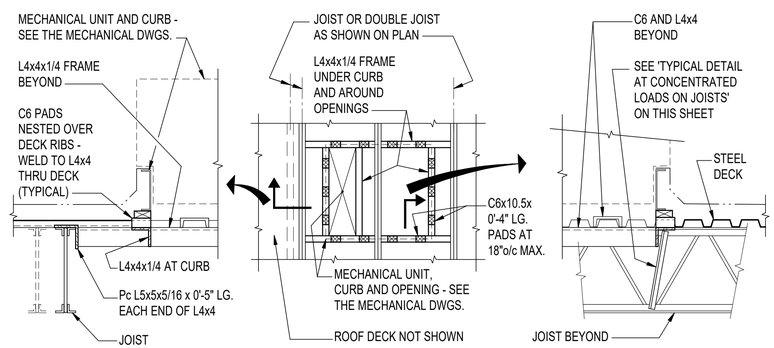

DETAILS FOR AREAS WITH 1 1/2" DECK

A2 TYPICAL ROOF TOP MECHANICAL UNIT SUPPORT DETAILS

NOT TO SCALE

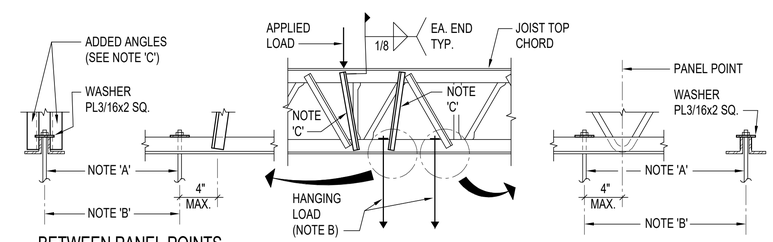

TYPICAL DETAIL AT CONCENTRATED LOADS ON JOISTS NOTES:

A. HANGER RODS - SEE THE ARCHITECTURAL, MECHANICAL, PLUMBING AND ELECTRICAL DRAWINGS.

B. POSITION HANGER RODS ON JOIST CENTERLINE BETWEEN BOTTOM CHORD ANGLES. "C" CLAMP CONNECTIONS ARE NOT ALLOWED.

C. WHERE CONCENTRATED LOADS ARE APPLIED TO TOP CHORDS OR HUNG FROM BOTTOM CHORDS BETWEEN PANEL POINTS REINFORCE JOIST WITH DOUBLE ANGLES AS INDICATED. AT "K" SERIES PROVIDE DBL. L1x1x1/8; AT "LH" AND "DLH" SERIES PROVIDE DBL. L2 1/2x2 1/2x1/4.

A3 TYPICAL DETAIL AT CONCENTRATED LOADS ON JOISTS

NOT TO SCALE

NOTE: THIS DETAIL IS FOR ALL LOADS WHICH EXCEED 50 POUNDS

PLAN NORTH N

0 ½" 1" 2" 3" 4"
1'-0" = 1'-0" GRAPHIC SCALE

NOTE:
IF THIS DRAWING IS LESS THAN 34" X 22"
IT IS A REDUCED SIZE DRAWING

SPEIGHT·MARSHALL·FRANCIS
STRUCTURAL ENGINEERS
1228 PERIMETER PARKWAY, SUITE 201
VIRGINIA BEACH, VIRGINIA 23454
P: 757.427.1020
7814 CAROUSEL LANE SUITE 200
RICHMOND, VIRGINIA 23294
P: 804.464.4111
SMAF Job No: 20.009-B
WWW.SMANDF.CO

STM	DESCRIPTION	DATE	APPR
	MOD P00006 AND MOD P00007	10/2025	
	MOD P00005	05/2023	

NAVFAC

COMMONWEALTH OF VIRGINIA
EARL H. INGE, JR.
Lic. No. 035522
1/13/2023
PROFESSIONAL ENGINEER

BAMFORTH ENGINEERS + SURVEYORS

AE INFO

APPROVED
FOR COMMANDER NAVFAC

ACTIVITY
Approved by J. Scott Roberts, Asset Management Branch Head & Supervisory Facility Planner, PWD Beaufort, SC via email.

SATISFACTORY TO DATE			12/15/2022
DES EHI	DRW SEC	CHK	DWS
PMDM			KTB / RLH
BRANCH MANAGER			NEK
CHIEF ENG/ARCH			EJA
FP ENGINEER			DSN

DEPARTMENT OF THE NAVY
NAVAL FACILITIES ENGINEERING SYSTEMS COMMAND ~ MID-ATLANTIC
NORFOLK, VA
DC CORE:
MCAS BEAUFORT
NAVAL FACILITIES ENGINEERING SYSTEMS COMMAND
BEAUFORT, SC
P-475 AIRCRAFT MAINTENANCE HANGAR - VOLUME 3 (OSF OPTION)
TYPICAL FRAMING DETAILS

SCALE:	3/4" = 1'-0"
EPROJECT NO.:	1363603
CONSTR. CONTR. NO.	
NAVFAC DRAWING NO.	12860129
SHEET 928 OF 1412	

OSF503

DRAWFORM REVISION: 25 AUGUST 2020

Autodesk Docs://2042 MFAT 320 F35 Maintenance Hangar/BLDG PKTS_OSF 13363603.rvt
11/11/2025 6:08:54 PM

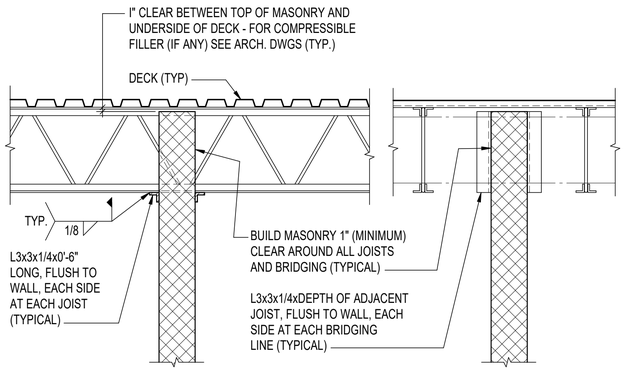

PARTITIONS TO UNDERSIDE OF DECK

C1 TYPICAL NON-BEARING MASONRY PARTITION DETAILS

NOT TO SCALE

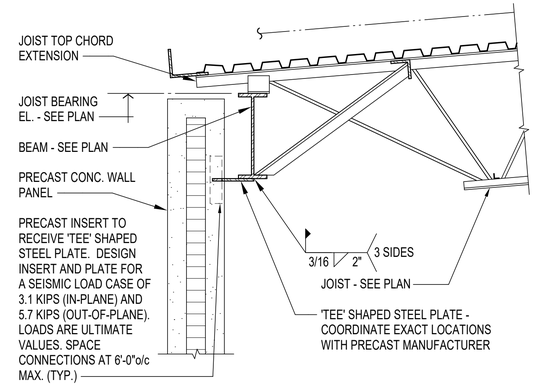

AT ROOF (LATERAL ONLY)

C2 TYPICAL PRECAST CONNECTION DETAILS

NOT TO SCALE

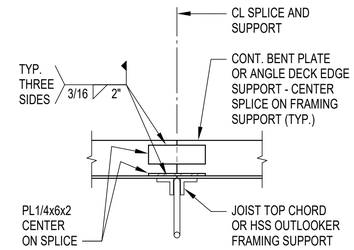

C4 TYPICAL CONTINUOUS BENT PLATE OR ANGLE SPLICE DETAIL

NOT TO SCALE

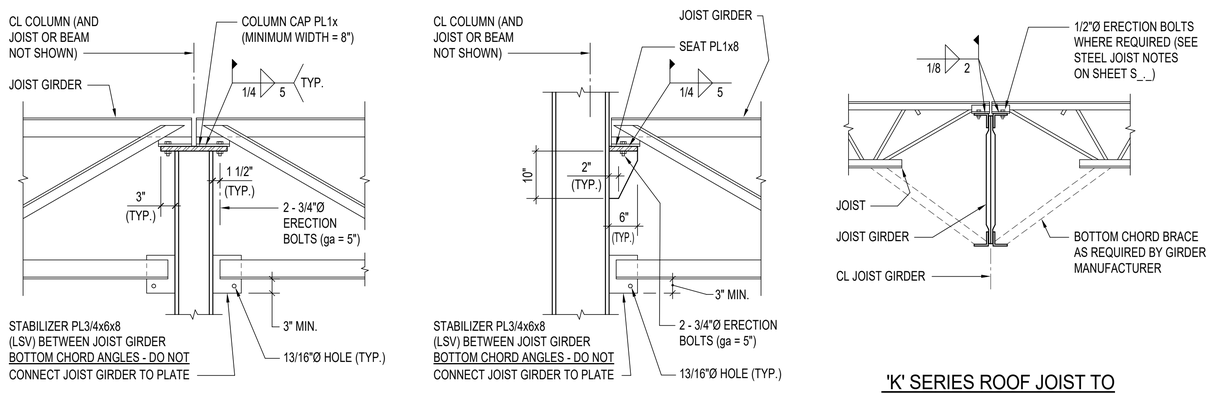

B1 TYPICAL JOIST GIRDER CONNECTION DETAILS

NOT TO SCALE

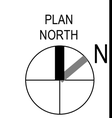

0 ½" 1" 2" 3" 4"

1'-0" = 1'-0" GRAPHIC SCALE

NOTE:
IF THIS DRAWING IS LESS THAN 34" X 22"
IT IS A REDUCED SIZE DRAWING

SPEIGHT·MARSHALL·FRANCIS
STRUCTURAL ENGINEERS
1228 PERIMETER PARKWAY, SUITE 201
VIRGINIA BEACH, VIRGINIA 23454
P: 757.427.1020
7814 CAROUSEL LANE SUITE 200
RICHMOND, VIRGINIA 23294
P: 804.464.4111
SMMF Job No: 20.009-B
WWW.SMANDF.CO

APPR	DATE	DESCRIPTION	STM
	10/2025	MOD P00006 AND MOD P00007	
	05/2023	MOD P00005	

NAVFAC

COMMONWEALTH OF VIRGINIA
EARL H. INGE, JR.
Lic. No. 035522
1/13/2023
PROFESSIONAL ENGINEER

BAMFORTH ENGINEERS + SURVEYORS

AE INFO

APPROVED
FOR COMMANDER NAVFAC
11/21/2025

ACTIVITY
Approved by J. Scott Roberts, Asset Management Branch Head & Supervisory Facility Planner, PWD Beaufort, SC via email.

SATISFACTORY TO DATE 12/15/2022

DES	EHI	DRW	SEC	CHK	DWS
PMDM	KTB / RLH				
BRANCH MANAGER	NEK				
CHIEF ENG/ARCH	EJA				
FP ENGINEER	DSN				

DEPARTMENT OF THE NAVY
NAVAL FACILITIES ENGINEERING SYSTEMS COMMAND
NAVAL FACILITIES ENGINEERING SYSTEMS COMMAND ~ MID-ATLANTIC
NORFOLK, VA
DC CORE:
MCAS BEAUFORT
BEAUFORT, SC

P-475 AIRCRAFT MAINTENANCE HANGAR - VOLUME 3 (OSF OPTION)

TYPICAL FRAMING DETAILS

SCALE: 3/4" = 1'-0"
EPROJECT NO.: 1363603
CONSTR. CONTR. NO.
NAVFAC DRAWING NO. 12860130
SHEET 929 OF 1412

OSF504

DRAWFORM REVISION: 25 AUGUST 2020

Autodesk Docs://2042 MFAT 520 F33 Maintenance Hangar/BLDG PKTS_OSF 13363603.rvt
11/11/2025 6:58:55 PM