SINGLE LINE DIAGRAM

SYMBOL	DESCRIPTION
1OLN1	PANELBOARD. WHEN ADDITIONAL SYMBOL(S) ARE INCLUDED, THEY INDICATE THE FOLLOWING: MAIN CIRCUIT BREAKER. SEE PANEL SCHEDULE FOR SIZE. IF NOT PRESENT, PANELBOARD WITH MAIN LUGS ONLY.
3P 100 A	CIRCUIT BREAKER WITH NUMBER OF POLES AND TRIP RATING AS INDICATED.
3P 100 A ETM M	ELECTRONIC TRIP BREAKER WITH INTEGRAL POWER MONITORING METER. NUMBER OF POLES AND TRIP RATING AS INDICATED. METERING IDENTIFICATION CODES AS FOLLOWS: L - LIGHTING LOADS R - RECEPTACLE LOADS M - MECHANICAL EQUIPMENT LOADS
	ADDITIONAL CIRCUIT BREAKER SUBSCRIPTS INDICATE THE FOLLOWING: ET - SOLID STATE ELECTRONIC TRIP CIRCUIT BREAKER WITH FIELD ADJUSTABLE LONG TIME PICKUP, SHORT TIME PICKUP, SHORT TIME DELAY, AND INSTANTANEOUS TRIP FUNCTIONS. ETM - SOLID STATE ELECTRONIC TRIP CIRCUIT BREAKER WITH INTEGRAL POWER METERING, BREAKER STATUS, AND FIELD ADJUSTABLE LONG TIME PICKUP, SHORT TIME PICKUP, SHORT TIME DELAY, AND INSTANTANEOUS TRIP FUNCTIONS. METERING AND STATUS SHALL BE CONNECTED TO THE POWER MONITORING SYSTEM VIA NETWORK CABLING.
M	MULTIFUNCTION DIGITAL POWER CIRCUIT MONITOR.
SPD	PARALLEL CONNECTED SURGE PROTECTIVE DEVICE. SEE SURGE PROTECTIVE DEVICE SCHEDULE ON SHEET OEP700.
4 / EP600 / T-3	FEEDER CONTINUATION SYMBOL FEEDER REFERENCE SHEET ON WHICH FEEDER IS CONTINUED EQUIPMENT OR PANEL TO WHICH FEEDER IS CONNECTED

POWER DISTRIBUTION

SYMBOL	DESCRIPTION	MOUNTING
	SURFACE MOUNTED PANELBOARD	72" AFF TO TOP
	SURFACE MOUNTED DISTRIBUTION PANELBOARD	72" AFF TO TOP
	GROUNDING BUS BAR, SUBSCRIPT INDICATES NAME. REFER TO A1/OEP600 FOR DETAIL.	18" AFF TO TOP
30A 3R	600V, 3P, NON-FUSED DISCONNECT SWITCH. ALL DISCONNECT SWITCHES SHALL BE NEMA 1 UNLESS OTHERWISE INDICATED. SUBSCRIPTS INDICATE THE FOLLOWING: 30A - AMPERE RATING 3R - NEMA ENCLOSURE OTHER THAN NEMA 1 (3R, 4X, ETC...)	72" AFF TO TOP
L-30-3Φ 3R	COMBINATION MAGNETIC STARTER/DISCONNECT SWITCH IN NEMA 1 ENCLOSURE UNLESS OTHERWISE INDICATED. SEE MOTOR STARTER SCHEDULE ON SHEET OEP700 FOR STARTER CHARACTERISTICS, AND HOME RUN MOTOR BRANCH CIRCUIT SIZE. MOTOR BRANCH CIRCUIT SIZE SHALL BE THE SAME FROM THE STARTER TO MOTOR. MINIMUM SHORT CIRCUIT RATING SHALL MATCH THE UPSTREAM OVERCURRENT PROTECTIVE DEVICE. SEE SHEET OEP700 FOR STARTER WIRING DIAGRAMS. SUBSCRIPTS INDICATE THE FOLLOWING: L-30-3Φ PHASE MOTOR HP RATING L1- 120V L2 - 208V 3R - NEMA ENCLOSURE OTHER THAN NEMA 1 (3R, 4X, ETC...)	72" AFF TO TOP
VFD L-30-3Φ 3R	VARIABLE FREQUENCY DRIVE. SEE VARIABLE FREQUENCY DRIVE SCHEDULE ON SHEET OEP700 FOR VFD CHARACTERISTICS, AND HOME RUN MOTOR BRANCH CIRCUIT SIZE. MINIMUM SHORT CIRCUIT RATING SHALL MATCH THE UPSTREAM OVERCURRENT PROTECTIVE DEVICE. MOTOR BRANCH CIRCUIT SIZE SHALL BE THE SAME FROM THE VFD TO MOTOR. SEE SHEET OEP700 FOR VFD WIRING DIAGRAMS. SUBSCRIPTS INDICATE THE FOLLOWING: L-30-3Φ PHASE MOTOR HP RATING L - 208V 3R - NEMA ENCLOSURE OTHER THAN NEMA 1 (3R, 4X, ETC...)	72" AFF TO TOP, UON

WIRING DEVICES

NOTES: ALL MOUNTING HEIGHTS ARE TO TOP, UON
SUBSCRIPTS FOR RECEPTACLES INDICATE THE FOLLOWING:
G - INTEGRAL GFCI.
+48" - MOUNT AT 48" AFF TO CENTER. OTHER MOUNTING HEIGHTS AS INDICATED.
WP - RECEPTACLE WITH WEATHER RESISTANT MARKING (WR) MOUNTED IN A IN-USE WEATHER PROOF ENCLOSURE.
EWC - WITH INTEGRAL GFCI FOR ELECTRIC WATER COOLER. MOUNTING HEIGHT AS REQUIRED.

SYMBOL	DESCRIPTION	MOUNTING
	20A, 125V DUPLEX RECEPTACLE.	18" AFF
	20A, 125V SIMPLEX RECEPTACLE.	18" AFF
	CONTROLLED RECEPTACLE, 20A, 125V SPLIT CIRCUIT DUPLEX RECEPTACLE WITH THE UPPER RECEPTACLE MARKED WITH A POWER SYMBOL AND THE WORD CONTROLLED. THE UPPER RECEPTACLE SHALL BE CONTROLLED BY THE DIGITAL LIGHTING AND PLUG CONTROL SYSTEM. THE LOWER RECEPTACLE SHALL NOT BE CONTROLLED.	18" AFF
	20A, 125V CEILING MOUNTED DUPLEX RECEPTACLE.	AS INDICATED
NEMA	SPECIAL RECEPTACLE WITH NEMA CONFIGURATION AS INDICATED.	18" AFF
	RETRACTABLE CORD REEL. STEEL CONSTRUCTION WITH BLACK POWDER COAT FINISH, BLACK THREE CONDUCTOR (#12AWG), 30 FOOT, TYPE SJOW CORD WITH BLACK 20A DUPLEX RECEPTACLE ON PAYOUT END, ADJUSTABLE BALL STOP, AND STEEL MOUNTING BASE. ADJUST BALL STOP SUCH THAT THE RECEPTACLE IS AT 6'-6" AFF TO BOTTOM WHEN RETRACTED. MOUNT WITHIN 12" OF RECEPTACLE SERVING THE CORD REEL.	STRUCTURE ABOVE

CONDUIT AND CONDUCTORS

SYMBOL	DESCRIPTION
	BRANCH CIRCUIT WIRING IN CONDUIT. 1/2"C - 2#12 + 1#12 GND UON. PROVIDE ADDITIONAL SWITCHED CONDUCTORS OR TRAVELER CONDUCTORS FOR LIGHTING CIRCUITS AS REQUIRED TO SUPPORT THE INDICATED SWITCHING.
	HOMERUN TO PANELBOARD: 1OLN1 - 1,3,5 CIRCUIT DESIGNATION. PANELBOARD DESIGNATION.
3#6+1#10G 3/4"C	CONDUIT AND CONDUCTOR SIZES AS INDICATED.

EQUIPMENT CONNECTIONS

SYMBOL	DESCRIPTION	MOUNTING
J	JUNCTION BOX OR PULL BOX	AS INDICATED
2	MOTOR CONNECTION. NUMERAL INDICATES HORSEPOWER.	NA
E FCU/A	CONNECTION TO EQUIPMENT LEADS, TERMINAL STRIPS OR CONTROL PANEL INCLUDING ALL CONDUCTORS, CONDUIT, FLEXIBLE CONDUIT, JUNCTION BOXES, CONNECTORS, FITTINGS, ETC., REQUIRED FOR PROPER CONNECTION. COORDINATE EXACT LOCATION WITH THE SUPPLIED EQUIPMENT. SUBSCRIPT INDICATES EQUIPMENT IDENTIFICATION.	AS REQUIRED

POWER DISTRIBUTION EQUIPMENT CODES

1 O L S 1
EQUIPMENT CODE:
1,2,3 - SEQUENCE
N - NORMAL BRANCH
D - DISTRIBUTION PANEL (WHERE PRESENT)
L - 208Y/120V
BUILDING DESIGNATION
FLOOR LEVEL

20A 120V RECEPTACLE BRANCH CIRCUIT HOMERUN SCHEDULE

HOMERUN LENGTH	CONDUCTOR SIZE
0-50 FEET	#12 AWG COPPER
51-100 FEET	#10 AWG COPPER
101-150 FEET	#8 AWG COPPER

NOTES:
A. THE CONDUCTOR SIZES SHOWN ARE FOR THE PHASE, NUETRAL AND GROUND CONDUCTORS.
B. FINAL CONNECTIONS TO RECEPTACLES WILL BE #12 AWG COPPER MAXIMUM. PROVIDE JUNCTION BOX ABOVE FINISHED ACCESSIBLE CEILING AS CLOSE AS POSSIBLE TO THE RECEPTACLES SERVED FOR CONDUCTOR TRANSISTIONS.

CONTROL DIAGRAM SYMBOLS

SYMBOL	DESCRIPTION
	NORMALLY OPEN CONTACT (N.O.)
	NORMALLY CLOSED CONTACT (N.C.)
C	OPERATING COIL
G	PILOT LIGHT "R" INDICATES RED, "G" INDICATES GREEN
	CONTROL CIRCUIT FUSE
OL	OVERLOAD RELAY CONTACT
H O A	HAND-OFF-AUTO AUTOMATIC SELECTOR SWITCH
	CONDUCTOR CONNECTION

LIGHTNING PROTECTION SYSTEM

SYMBOL	DESCRIPTION
	AIR TERMINAL. SUBSCRIPTS INDICATE THE FOLLOWING: A - STANDING SEAM METAL ROOF MOUNTED AIR TERMINAL. SEE C4/OEQ501 FOR DETAIL.
	LIGHTNING PROTECTION SYSTEM ROOF CONDUCTOR.
GL	LIGHTNING PROTECTION SYSTEM GROUND LOOP CONDUCTOR. BURY IN DIRECT CONTACT WITH EARTH AT 24" BELOW FINISHED GRADE.
	GROUND RODS BONDED TO GROUND LOOP CONDUCTOR. SEE C4/OEQ502 FOR DETAIL.
	BONDING CONNECTION.
DN1	CONCEALED THROUGH ROOF CONDUCTOR DETAIL. SEE C1/OEQ501 FOR DETAIL.
DN2	EXPOSED ROOF DOWN CONDUCTOR DETAIL. SEE SHEET OEQ111 FOR REQUIREMENTS.

MISCELLANEOUS

SYMBOL	DESCRIPTION	MOUNTING
00	KEY NOTE SYMBOL.	NA
	ELECTRICAL GROUND	NA
	CONDUCTOR CONNECTION	NA

ABBREVIATIONS

A	AMPERES	JB	JUNCTION BOX
AFC	ABOVE FINISHED CEILING	KAIC	KILO-AMPERES INTERRUPTING CAPACITY
AFF	ABOVE FINISHED FLOOR		
AFG	ABOVE FINISHED GRADE	KV	KILO-VOLTS
AHU	AIR HANDLING UNIT	KVA	KILO-VOLTS-AMPERES
AIC	AMPERES INTERRUPTING CAPACITY	KVAR	KILO-VOLTS-AMPERES REACTIVE
ATS	AUTOMATIC TRANSFER SWITCH	KW	KILO-WATTS
AWG	AMERICAN WIRE GAUGE	KWH	KILO-WATT-HOURS
BFC	BELOW FINISHED CEILING	LAN	LOCAL AREA NETWORK
BFG	BELOW FINISHED GRADE	LED	LIGHT-EMITTING DIODE
C	CONDUIT	LTG	LIGHTING
CAB	CABINET	m	METER
CATV	CABLE TELEVISION	mm	MILLIMETER
CCTV	CLOSED CIRCUIT TELEVISION	MAX	MAXIMUM
CH	CHILLER	MCB	MAIN CIRCUIT BREAKER
CKT	CIRCUIT	MCC	MOTOR CONTROL CENTER
CL	CENTERLINE	MCP	MOTOR CIRCUIT PROTECTOR
CLG	CEILING	MFR	MANUFACTURER
CT's	CURRENT TRANSFORMERS	MIN	MINIMUM
CU	COPPER	MISC	MISCELLANEOUS
DISC	DISCONNECT(ING)	MTR	MOTOR
DWG	DRAWING(S)	MTD	MOUNTED
EA	EACH	MTG	MOUNTING
EF	EXHAUST FAN	MTS	MANUAL TRANSFER SWITCH
EMT	ELECTRICAL METALLIC TUBING	N.C.	NORMALLY CLOSED
EQUIP	EQUIPMENT	N.O.	NORMALLY OPEN
EUH	ELECTRIC UNIT HEATER	NA	NOT APPLICABLE
EWC	ELECTRIC WATER COOLER	NC	NURSE CALL
EWH	ELECTRIC WATER HEATER	NEC	NATIONAL ELECTRICAL CODE
EXH	EXHAUST	NFPA	NATIONAL FIRE PROTECTION ASSOCIATION
EXIST	EXISTING		
FA	FIRE ALARM	PNL	PANEL
FLUOR	FLUORESCENT	PVC	POLYVINYL CHLORIDE
G	GROUND	REC	RECEPTACLE
GEN	ENGINE GENERATOR SET	RGS	RIGID GALVANIZED STEEL
GFI	GROUND FAULT INTERRUPTER	SF	SUPPLY FAN
GFCI	GROUND FAULT CIRCUIT INTERRUPTER	TEL	TELEPHONE
GFGI	GOVERNMENT FURNISHED, GOVERNMENT INSTALLED	TYP	TYPICAL
		UH	UNIT HEATER
GFP	GROUND FAULT PROTECTION	UON	UNLESS OTHERWISE NOTED
GND	GROUND	V	VOLTS
HGT	HEIGHT	VA	VOLT-AMPERES
HOA	HAND-OFF-AUTOMATIC	VAV	VARIABLE AIR VOLUME UNIT
HP	HORSEPOWER	W	WATTS
HVAC	HEATING/VENTILATING / AIR CONDITIONING	WAP	WIRELESS ACCESS POINT
		WP	WEATHER PROOF
HV	HIGH VOLTAGE	XFMR	TRANSFORMER
INC	INCANDESCENT		

GENERAL NOTES

A. SEE REFLECTED CEILING PLANS FOR EXACT LOCATION OF CEILING MOUNTED LUMINAIRES AND DEVICES.
B. INSTALL ALL EQUIPMENT AND DEVICES AT THE HEIGHT INDICATED. REFER TO ARCHITECTURAL INTERIOR ELEVATIONS FOR SPECIAL MOUNTING HEIGHTS AND LOCATIONS OF ELECTRICAL AND COMMUNICATIONS DEVICES. MOUNTING HEIGHTS AND LOCATIONS INDICATED ON ARCHITECTURAL ELEVATIONS TAKE PRECEDENCE OVER OTHER MOUNTING HEIGHTS AND LOCATIONS.
C. LUMINAIRE TYPES INDICATED AS FOLLOWS: UPPER CASE LETTER WITH NUMERAL DENOTES FIXTURE TYPE (SEE LUMINAIRE SCHEDULE), LOWER CASE LETTER (IF SHOWN) DENOTES SWITCHING ARRANGEMENT.
D. ALL MATERIALS AND EQUIPMENT WILL BE LISTED AS COMPLYING WITH THE APPLICABLE STANDARDS OF UNDERWRITER'S LABORATORIES, INC OR OTHER APPROVED LISTING AGENCIES.
E. CONDUCTOR AMPACITIES ARE BASED ON 60° C COPPER FOR #12 AWG THROUGH #1 AWG CONDUCTORS. CONDUCTOR AMPACITIES ARE BASED ON 75° C COPPER FOR CONDUCTORS LARGER THAN #1 AWG.
F. ALL CONDUIT SIZES ARE BASED ON ELECTRICAL METALLIC TUBING (EMT) WITH TYPE THHN/THWN COPPER CONDUCTORS. ADJUST CONDUIT SIZE AS REQUIRED FOR OTHER CONDUIT MATERIALS AND CONDUCTOR TYPES.
G. THE PANELBOARD SUPPLIER IS RESPONSIBLE FOR PROVIDING OVERCURRENT PROTECTIVE DEVICES THAT ARE SELECTIVELY COORDINATED. REFER TO SPECIFICATION SECTION 26 28 01.00 10 FOR REQUIREMENTS.
H. WHERE CONDUIT IS ROUTED ABOVE THE FINISHED CEILING, COORDINATE LOCATION AND ROUTING WITH OTHER TRADES AND SYSTEMS TO PROVIDE A COORDINATED INSTALLATION AND TO ASSURE MAXIMUM ACCESSIBILITY TO ALL SYSTEMS. ALL JUNCTION BOXES AND PULL BOXES WILL REMAIN ACCESSIBLE.
I. WHEN CONTRACTOR FURNISHED EQUIPMENT INCLUDING BUT NOT LIMITED TO ARCHITECTURAL HARDWARE (I.E. WINDOW SHADES, OVERHEAD COILING DOORS AND GRILLS, POWER OPERATED DOORS, ETC...), PLUMBING EQUIPMENT, AND HVAC EQUIPMENT SIZE OR ELECTRICAL CHARACTERISTICS PROVIDED DIFFERS FROM SIZE OR ELECTRICAL CHARACTERISTICS INDICATED OR SPECIFIED, MAKE ALL NECESSARY ADJUSTMENTS TO ELECTRICAL BOXES, CONDUIT, WIRING, DISCONNECT DEVICES, BRANCH CIRCUIT PROTECTION, AND RELATED ELECTRICAL DISTRIBUTION EQUIPMENT INCLUDING ANY ELECTRICAL REDESIGN AS REQUIRED TO ACCOMMODATE EQUIPMENT ACTUALLY PROVIDED.
J. DO NOT MOUNT ELECTRICAL OR COMMUNICATIONS DEVICES, OUTLETS, OR BOXES BACK TO BACK UNLESS SPECIFICALLY INDICATED OTHERWISE NOTED. IN WALLS WITH A STC RATING OF 50 OR MORE, OFFSET OUTLETS OR BOXES IN OPPOSITE SIDES OF THE WALL BY AT LEAST ONE STUD CAVITY.
K. PROVIDE SEPARATE NEUTRAL CONDUCTOR FOR EACH 277V AND 120V BRANCH CIRCUIT, UON. MULTIPLE 20A BRANCH CIRCUITS FROM THE SAME PANELBOARD MAY BE COMBINED IN A SINGLE 1/2" CONDUIT HOME RUN, MAXIMUM OF (3) CIRCUIT PER HOME RUN.
L. MAINTAIN 18" CLEAR SPACE ABOVE ALL CABLE TRAYS. MAINTAIN AT LEAST 12" CLEAR SPACE ON ONE SIDE OF ALL CABLE TRAYS FOR SIDE ACCESS TO THE CABLE TRAYS.
M. ALL CEILING MOUNTED LIGHTING OCCUPANCY SENSORS AND FIRE ALARM SMOKE DETECTORS WILL BE LOCATED SUCH THAT THERE IS A MINIMUM OF 36" BETWEEN THE SENSOR AND ANY HVAC RETURN/SUPPLY DIFFUSERS.
N. WHERE CONDUITS ARE ROUTED ABOVE FINISHED CEILING, COORDINATE LOCATION AND ROUTING WITH OTHER TRADES AND SYSTEMS TO PROVIDE A COORDINATED INSTALLATION AND TO ASSURE MAXIMUM ACCESSIBILITY TO ALL SYSTEMS. ALL JUNCTION BOXES AND PULL BOXES SHALL REMAIN ACCESSIBLE.
O. SEE C1/OEG002 FOR EQUIPMENT IDENTIFICATION LABEL DETAIL.
P. SEE A1/OEG002 FOR MISCELLANEOUS EQUIPMENT IDENTIFICATION LABEL DETAIL.
Q. PROVIDE DISCONNECTING MEANS FOR MISCELLANEOUS MOTOR LOADS AS REQUIRED BY NFPA 70.

NOTE:
IF THIS DRAWING IS LESS THAN 34" X 22"
IT IS A REDUCED SIZE DRAWING

STM	DESCRIPTION	DATE	APPR
1	MOD P00005	05/2023	
2	MOD P00006 AND MOD P00007	10/2025	

NAVFAC

NICHOLAS G. ZUBRZYCKI LICENSE No 64299 STATE OF FLORIDA PROFESSIONAL ENGINEER

BAMFORTH ENGINEERS & CONTRACTORS

AE INFO

APPROVED
FOR COMMANDER NAVFAC
ACTIVITY
Approved by J. Scott Roberts, Asset Management Branch Head & Supervisory Facility Planner, PWD Beaufort, SC via email.
SATISFACTORY TO DATE 12/15/2022

DES	RLW	DRW RLW	CHK KLM
PMDM	KTB / RLH		
BRANCH MANAGER	JAS		
CHIEF ENG/ARCH	EJA		
FP ENGINEER	DSN		

DEPARTMENT OF THE NAVY
NAVAL FACILITIES ENGINEERING SYSTEMS COMMAND
DC CORE:
MCAS BEAUFORT
NAVAL FACILITIES ENGINEERING SYSTEMS COMMAND ~ MID-ATLANTIC
NORFOLK, VA
BEAUFORT, SC
P-475 AIRCRAFT MAINTENANCE HANGAR - VOLUME 3 (OSF OPTION)
ELECTRICAL LEGEND AND ABBREVIATIONS - VOLUME 3

SCALE: As indicated
EPROJECT NO.: 13363603
CONSTR. CONTR. NO.
NAVFAC DRAWING NO. 12860234
SHEET 1033 OF 1412
OEG001
DRAWFORM REVISION: 25 AUGUST 2020

Autodesk Docs://20042 NAF A1 320 FB Maintenance Hangar/20042 F35 maint Hangar_OSF Hosp Annex BL/R/T2024.rvt
11/9/2023 4:01:40 PM

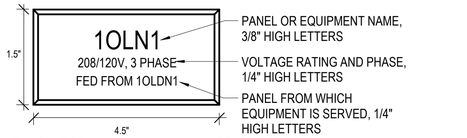

TYPICAL FOR:
1. PANELBOARDS
2. TRANSFORMERS
3. SWITCHBOARDS
4. SWITCHGEAR
5. MOTOR CONTROL CENTERS
6. LOAD INTERRUPTER SWITCHES
7. RELAY PANELS
8. CONTACTORS
9. CAPACITOR BANKS

COLOR CODE:
1. NORMAL: BLACK FACE WITH WHITE LETTERS

GENERAL NOTES:
A. PROVIDE LAMINATED PLASTIC NAMEPLATES FOR ALL EQUIPMENT ENCLOSURES AS INDICATED. NAMEPLATES WILL BE MELAMINE PLASTIC, 0.125 INCH THICK WITH FACE AND CORE COLORS AS INDICATED. SURFACE WILL HAVE A MATTE FINISH. CORNERS WILL BE SQUARE AND EDGES WILL BE BEVELED. ACCURATELY ALIGN LETTERING AND ENGRAVE INTO THE CORE.
B. NAME PLATE WIDTH WILL BE 4.5". PROVIDE ADDITIONAL LINES OF TEXT AND INCREASE HEIGHT OF PLATE AS REQUIRED.

C1 ELECTRICAL EQUIPMENT IDENTIFICATION LABEL DETAIL
NOT TO SCALE

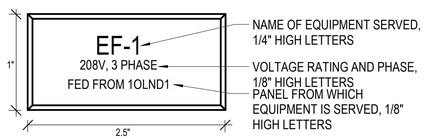

TYPICAL FOR:
1. DISCONNECT SWITCHES
2. ENCLOSED CIRCUIT BREAKERS
3. INDIVIDUAL MOTOR STARTERS
4. VARIABLE FREQUENCY DRIVES
5. STARTERS AND CONTROL PANELS PROVIDED WITH MECHANICAL EQUIPMENT

COLOR CODE:
1. NORMAL: BLACK FACE WITH WHITE LETTERS

GENERAL NOTES:
A. PROVIDE LAMINATED PLASTIC NAMEPLATES FOR ALL EQUIPMENT ENCLOSURES AS INDICATED. NAMEPLATES WILL BE MELAMINE PLASTIC, 0.125 INCH THICK WITH FACE AND CORE COLORS AS INDICATED. SURFACE WILL HAVE A MATTE FINISH. CORNERS SHALL BE SQUARE AND EDGES WILL BE BEVELED. ACCURATELY ALIGN LETTERING AND ENGRAVE INTO THE CORE.
B. NAME PLATE WIDTH WILL BE 2 1/2". PROVIDE ADDITIONAL LINES OF TEXT AND INCREASE HEIGHT OF PLATE AS REQUIRED.

A1 MISCELLANEOUS ELECTRICAL EQUIPMENT LABEL DETAIL
NOT TO SCALE

LUMINAIRES

NOTES:
1. SEE LIGHTING FIXTURE SCHEDULE FOR FIXTURE TYPES.
2. OTHER FIXTURE DIMENSIONS AND SHAPES ARE AS INDICATED ON LIGHTING PLANS.

BATTERY INVERTER IDENTIFICATION (TYPICAL FOR ALL FIXTURES)

NORMAL POWER.
BATTERY INVERTER
NORMAL POWER.
BATTERY INVERTER

SYMBOL	DESCRIPTION	SYMBOL
	2'x4' VOLUMETRIC FIXTURE, UON.	CEILING
	PENDANT MOUNT INDUSTRIAL FIXTURE, UON.	PENDANT
	WALL MOUNT VANITY LUMINAIRE.	WALL
	WALL MOUNT LUMINAIRE.	WALL
	RECESSED DOWNLIGHT.	CEILING
	PENDANT MOUNT AREA LUMINAIRE.	PENDANT
	EXIT SIGN. SHADED PORTION DENOTES FACE(S). DIRECTIONAL ARROWS AS INDICATED.	4" ABOVE TOP OF DOOR FRAME TO BOTTOM OF FIXTURE

LINE-VOLTAGE LIGHTING CONTROL DEVICES

NOTES:
1. ALL WIRING SHALL BE #12 AWG IN 1/2" CONDUIT, MINIMUM.
2. PROVIDE EQUIPMENT GROUNDING CONDUCTOR FOR ALL CIRCUITS.

SYMBOL	DESCRIPTION	MOUNTING
S	20A, 120/277V SINGLE POLE SWITCH, UON.	48" AFF TO CENTER, UON

RELAY-BASED LIGHTING CONTROL DEVICES

NOTES:
1. REFER TO C1/OEL601 FOR RELAY-BASED CONTROL SYSTEM RISER DIAGRAM.
2. REFER TO SHEET OEL601 FOR RELAY PANEL SCHEDULES.
3. SYSTEM MANUFACTURER SHALL MATCH THE DIGITAL LIGHTING CONTROL DEVICE SSYSTEM MANUFACTURER.
4. ALL LOW-VOLTAGE WIRING REQUIRED FROM EACH LIGHTING CONTROL STATION, OCCUPANCY SENSOR, DAYLIGHT SENSOR, AND EXTERIOR PHOTOCELL TO ASSOCIATED LIGHTING RELAY PANEL SHALL BE IN 1/2" CONDUIT.
5. ALL 0-10V DIMMING WIRING SHALL BE IN 1/2" CONDUIT. AS ON OPTION, 0-10V DIMMING WIRING MAY BE INSTALLED IN SAME RACEWAY AS LINE VOLTAGE WIRING IF DIMMING WIRING IS RATED FOR 600V.
6. PROVIDE ALL COMPONENTS AS REQUIRED FOR A COMPLETE AND OPERATIONAL SYSTEM.
7. INSTALL COMPONENTS PER MANUFACTURER'S APPROVED SHOP DRAWINGS.

SYMBOL	DESCRIPTION	MOUNTING
OLRP1	RELAY PANEL. PANEL IDENTIFICATION INDICATES THE FOLLOWING: OLRP 1 1,2,3...- SEQUENCE OF PANELS LRP - LIGHTING RELAY PANEL	SURFACE AT 72" AFF TO TOP.
PE	EXTERIOR PHOTOCELL CONNECTED TO RELAY-BASED LIGHTING CONTROL SYSTEM.	AS INDICATED.

DIGITAL LIGHTING & PLUG CONTROL DEVICES

NOTES:
1. THE DIGITAL LIGHTING AND PLUG CONTROL SYSTEM WILL CONSIST OF LOCAL RELAY PACKS, OCCUPANCY SENSORS, AND DIGITAL SWITCHES. THE NUMBER OF RELAYS WILL MATCH THE NUMBER OF LIGHTING SWITCH LEGS IN EACH ROOM. AN ADDITIONAL RELAY(S) WILL BE PROVIDED IN ROOMS WHERE THE RECEPTACLES ARE ALSO CONTROLLED BY THE ROOM OCCUPANCY SENSOR. MULTI-RELAY PACKS SHALL BE ACCEPTABLE.
2. PROVIDE JUNCTION BOX FOR RELAY PACKS. ALL JUNCTION BOXES CONTAINING ELECTRICAL COMPONENTS WILL BE LOCATED IN AN ACCESSIBLE LOCATION ABOVE ACCESSIBLE CEILINGS. LABEL EACH JUNCTION BOX CONTAINING ELECTRICAL COMPONENTS TO INDICATE ITS FUNCTION. PROVIDE BOX DIVIDER FOR EACH BOX CONTAINING LINE VOLTAGE AND LOW VOLTAGE WIRING.
3. IN ROOMS WITH TILED FINISHED CEILINGS, PROVIDE IDENTIFICATION PLATE ON THE CEILING SYSTEM T-FRAME INDICATING LOCATION OF JUNCTION BOXES ABOVE CONTAINING ELECTRICAL COMPONENTS.
4. IN ROOMS WITH HARD FINISHED CEILINGS, PROVIDE CEILING ACCESS PANEL IMMEDIATELY BELOW THE LOCATION OF JUNCTION BOX CONTAINING ELECTRICAL COMPONENTS. PROVIDE IDENTIFICATION PLATE ON THE CEILING ACCESS PANEL INDICATING THE LOCATION.
5. LOW VOLTAGE CONTROL WIRING WILL BE IN ACCORDANCE WITH THE MANUFACTURERS RECOMMENDATIONS.
6. ALL LINE VOLTAGE WIRING SHALL BE #12 AWG IN 1/2" CONDUIT.
7. ALL LOW VOLTAGE WIRING, INCLUDING 0-10V DIMMING WIRING CABLE SHALL BE IN 1/2" CONDUIT.
8. THE LINE VOLTAGE AND LOW VOLTAGE WIRING WILL BE SEPARATED IN ACCORDANCE WITH NFPA 70.
9. PROVIDE ADDITIONAL OCCUPANCY SENSORS AS REQUIRED TO PROVIDE ADEQUATE COVERAGE OF CONTROLLED AREA.
10. SETTINGS OF OCCUPANCY SENSORS: MANUAL "ON", AUTO "OFF", 10 MINUTE TIME DELAY UON.
11. LOCATE INTERIOR DAYLIGHT SENSOR IN ACCORDANCE TO MANUFACTURER RECOMMENDATIONS.
12. PROVIDE ALL COMPONENTS AS REQUIRED FOR A COMPLETE AND OPERATIONAL SYSTEM.
13. INSTALL COMPONENTS PER MANUFACTURER'S APPROVED SHOP DRAWINGS.
14. REFER TO C3/OEL601 FOR TYPICAL LIGHTING AND PLUG CONTROL SYSTEM WIRING DIAGRAM.
15. THE DIGITAL LIGHTING CONTROL SYSTEM MANUFACTURER WILL BE THE SAME MANUFACTURER AS THE RELAY-BASED LIGHTING CONTROL SYSTEM.

SYMBOL	DESCRIPTION	MOUNTING
	DIGITAL SWITCH. SUBSCRIPTS INDICATE THE FOLLOWING: a,b - SWITCH LEG(S). PROVIDE SEPARATE PUSHBUTTON FOR EACH SWITCH LEG. D - DIMMING.	48" AFF TO CENTER
	DIGITAL, DUAL-TECHNOLOGY OCCUPANCY SENSOR. SUBSCRIPT INDICATES THE FOLLOWING: a,b - SWITCH LEG(S)	CEILING
	DIGITAL DAYLIGHT SENSOR. SUBSCRIPT INDICATES THE FOLLOWING: a,b - SWITCH LEG(S)	CEILING
LR	DIGITAL, LOCAL LIGHTING RELAY PACK. SUBSCRIPT INDICATES THE FOLLOWING: a,b - SWITCH LEG(S) D - DIMMING	CEILING
RR	DIGITAL, LOCAL RECEPTACLE RELAY PACK.	CEILING

DIGITAL LIGHTING & PLUG CONTROL SYSTEM SEQUENCE OF OPERATIONS

SYMBOL	DESCRIPTION
A	**LIGHTING** MANUAL "ON" VIA DIGITAL WALL SWITCH(ES). AUTO "OFF" VIA ROOM DIGITAL OCCUPANCY SENSOR(S). MANUAL DIMMING VIA DIGITAL WALL SWITCH(ES), WHERE DIMMING INDICATED. **RECEPTACLE** AUTO "ON" VIA ROOM DIGITAL OCCUPANCY SENSOR(S). AUTO "OFF" VIA ROOM DIGITAL OCCUPANCY SENSOR(S).
B	**LIGHTING** MANUAL "ON" VIA DIGITAL WALL SWITCH(ES). AUTO "OFF" VIA ROOM DIGITAL OCCUPANCY SENSOR(S). AUTO DIMMING VIA A DIGITAL DAYLIGHT SENSOR. DAYLIGHT DIMMING MANUAL OVERRIDE VIA DIGITAL WALL SWITCH(ES).

NOTE:
IF THIS DRAWING IS LESS THAN 34" X 22"
IT IS A REDUCED SIZE DRAWING

STM	DESCRIPTION	DATE	APPR
1	MOD P00005	05/2023	
2	MOD P00006 AND MOD P00007	10/2025	

NAVFAC

NICHOLAS G. ZUBRZYCKI LICENSE No 64299 STATE OF FLORIDA PROFESSIONAL ENGINEER
SEAL

BAMFORTH ENGINEERS CONTRACTORS
A/E INFO

APPROVED
FOR COMMANDER NAVFAC 11/21/2025

ACTIVITY: Approved by J. Scott Roberts, Asset Management Branch Head & Supervisory Facility Planner, PWD Beaufort, SC via email.

SATISFACTORY TO DATE 12/15/2022

DES	RLW	DRW RLW	CHK KLM
PM/DM	KTB / RLH		
BRANCH MANAGER	JAS		
CHIEF ENG/ARCH	EJA		
FP ENGINEER	DSN		

NAVAL FACILITIES ENGINEERING SYSTEMS COMMAND
NORFOLK, VA
NAVAL FACILITIES ENGINEERING SYSTEMS COMMAND – MID-ATLANTIC
DEPARTMENT OF THE NAVY
DC CORE
MCAS BEAUFORT
BEAUFORT, SC
P-475 AIRCRAFT MAINTENANCE HANGAR - VOLUME 3 (OSF OPTION)
ELECTRICAL LEGEND - VOLUME 3

SCALE: As indicated
EPROJECT NO.: 1363603
CONSTR. CONTR. NO.
NAVFAC DRAWING NO. 12860235
SHEET 1034 OF 1412
OEG002

DRAWFORM REVISION: 25 AUGUST 2020

Autodesk Docs://30042 VMFA1 503 F35 Maintenance Hangar/30042 F35 maint hangar_OSF drop Annex EL.rvt/30024.rvt
11/6/2023 4:01:46 PM

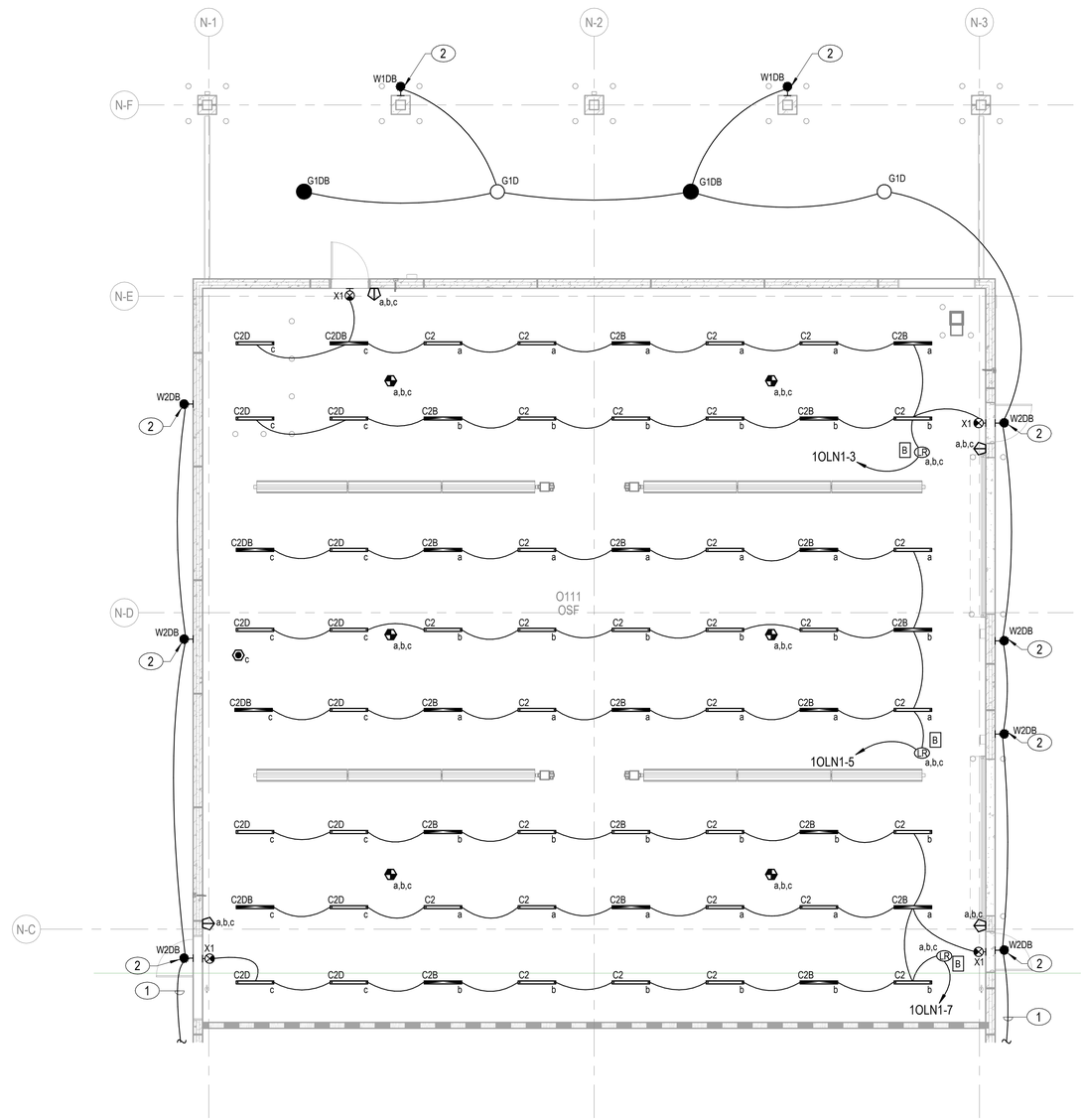

A1 LIGHTING PLAN, GROUND FLOOR - SECTOR A

1/8" = 1'-0"

NOTES:

SHEET NOTES:

A. EXTERIOR LIGHTING FIXTURES WILL BE CONTROLLED VIA LIGHTING RELAY PANEL "OLRP1" LOCATED IN ELECTRICAL ROOM O108.
B. PROVIDE AN UNSWITCHED PHASE CONDUCTOR TO ALL EMERGENCY BATTERY BACK-UP LIGHTING FIXTURES AND EXIT SIGNS.
C. REFER TO SHEET OEG002 FOR LIGHTING FIXTURE SYMBOLS LEGEND. REFER TO SHEETS OEL701 FOR LIGHTING FIXTURE SCHEDULE.
D. ALL INTERIOR LIGHTS IN ROOM O111 WILL BE CONNECTED TO EITHER SWITCH LEG 'A', SWITCH LEG 'B' OR SWITCH LEG 'C' AS INDICATED. ALL ASSOCIATED LIGHTING RELAYS IN ROOM O111 WILL BE NETWORKED TOGETHER AND PROGRAMMED SO THEY RESPOND TO ALL THE DIGITAL SWITCHES , DAYLIGHTING SENSORS AND OCCUPANCY SENSORS WITHIN ROOM O111 AS REQUIRED.
E. PROVIDE AN INPUT SIGNAL MODULE COMPATIBLE WITH THE DIGITAL LIGHTING RELAY SYSTEM THAT WILL ACCEPT A SIGNAL FROM THE FIRE ALARM SYSTEM CONTROL MODULE TO OVERRIDE ALL AUTOMATIC MEANS OF LIGHTING CONTROLS IN ROOM O111 UPON ACTIVATION OF THE FIRE ALARM SYSTEM. ALL INTERIOR LIGHT FIXTURES WITHIN ROOM O111 WILL TURN ON AT FULL OUTPUT UPON ACTIVATION OF THE FIRE ALARM SYSTEM.
F. SEE A3/OEL601 FOR LIGHT FIXTURE MOUNTING DETAIL FOR ROOM O111.

KEY NOTES (00)

1 SEE SHEET OEL101B FOR CONTINUATION.
2 MOUNT FIXTURE AT 10'-0" ABOVE FINISHED FLOOR TO BOTTOM.

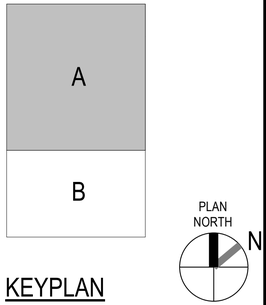

KEYPLAN

0 5' 10' 20' 30'

1/8" = 1'-0" GRAPHIC SCALE

NOTE:
IF THIS DRAWING IS LESS THAN 34" X 22"
IT IS A REDUCED SIZE DRAWING

STM	DESCRIPTION	DATE	APPR
1	MOD P00005	05/2023	
2	MOD P00006 AND MOD P00007	10/2025	

NAVFAC

NICHOLAS G. ZUBRZYCKI LICENSE No 64299 STATE OF FLORIDA PROFESSIONAL ENGINEER

SEAL

BAMFORTH ENGINEERS + SURVEYORS

AE INFO

APPROVED

FOR COMMANDER NAVFAC 11/21/2022

ACTIVITY: Approved by J. Scott Roberts, Asset Management Branch Head & Supervisory Facility Planner, PWD Beaufort, SC via email.

SATISFACTORY TO DATE 12/15/2022

DES RLW | DRW RLW | CHK KLM

PMDM KTB / RLH

BRANCH MANAGER JAS

CHIEF ENG/ARCH EJA

FP ENGINEER DSN

NAVAL FACILITIES ENGINEERING SYSTEMS COMMAND
NAVAL FACILITIES ENGINEERING SYSTEMS COMMAND ~ MID-ATLANTIC
NORFOLK, VA

DEPARTMENT OF THE NAVY
DC CORE
MCAS BEAUFORT

BEAUFORT, SC
P-475 AIRCRAFT MAINTENANCE HANGAR - VOLUME 3 (OSF OPTION)

OSF / SHOP ANNEX - LIGHTING PLAN - GROUND FLOOR - SECTOR A

SCALE: 1/8" = 1'-0"

EPROJECT NO.: 1363603

CONSTR. CONTR. NO.

NAVFAC DRAWING NO. 12860236

SHEET 1035 OF 1412

OEL101A

DRAWFORM REVISION: 25 AUGUST 2020

Autodesk Docs://20042 VMFA1 502 F35 Maintenance Hangar/20042 F35 maint Hangar_OSF Shop Annex EL-R/T20204.rvt
11/9/2023 4:01:53 PM

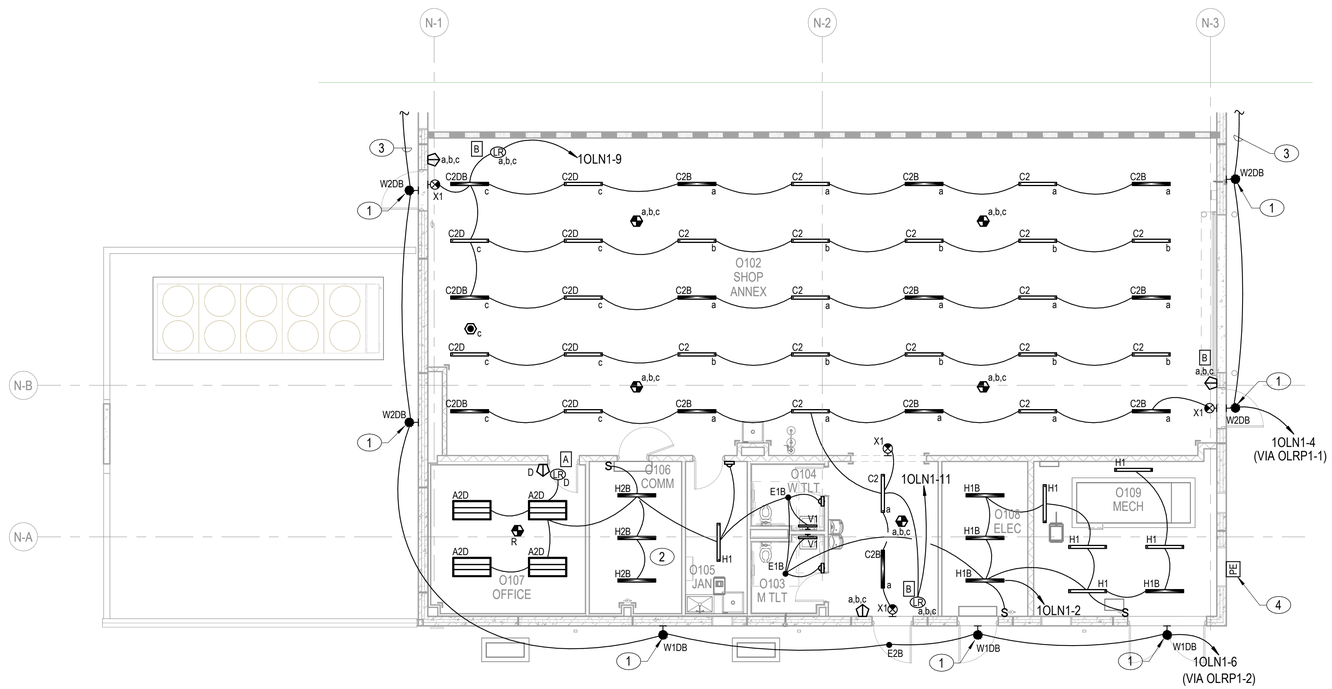

A1 LIGHTING PLAN, GROUND FLOOR - SECTOR B

1/8" = 1'-0"

NOTES:

SHEET NOTES:

A. EXTERIOR LIGHTING FIXTURES WILL BE CONTROLLED VIA LIGHTING RELAY PANEL "OLRP1" LOCATED IN ELECTRICAL ROOM O108.
B. PROVIDE AN UNSWITCHED PHASE CONDUCTOR TO ALL EMERGENCY BATTERY BACK-UP LIGHTING FIXTURES AND EXIT SIGNS.
C. REFER TO SHEET OEG002 FOR LIGHTING FIXTURE SYMBOLS LEGEND. REFER TO SHEETS OEL701 FOR LIGHTING FIXTURE SCHEDULE.
D. ALL INTERIOR LIGHTS IN ROOM O102 WILL BE CONNECTED TO EITHER SWITCH LEG 'A', SWITCH LEG 'B' OR SWITCH LEG 'C' AS INDICATED. ALL ASSOCIATED LIGHTING RELAYS IN ROOM O102 WILL BE NETWORKED TOGETHER AND PROGRAMMED SO THEY RESPOND TO ALL THE DIGITAL SWITCHES , DAYLIGHTING SENSORS AND OCCUPANCY SENSORS WITHIN ROOM O102 AS REQUIRED.
E. PROVIDE A MEANS TO OVERRIDE ALL AUTOMATIC MEANS OF LIGHTING CONTROLS IN ROOM O102 UPON ACTIVATION OF THE FIRE ALARM SYSTEM. ALL INTERIOR LIGHT FIXTURES WITHIN ROOM O102 WILL TURN ON AT FULL OUTPUT UPON ACTIVATION OF THE FIRE ALARM SYSTEM.
F. SEE A3/OEL601 FOR LIGHT FIXTURE MOUNTING DETAIL FOR ROOM O102.

KEY NOTES (00)

1 MOUNT FIXTURE AT 10'-0" ABOVE FINISHED FLOOR TO BOTTOM.
2 COORDINATE EXACT LIGHTING FIXTURE LOCATION WITH TELECOMMUNICATIONS EQUIPMENT RACKS AND LADDER TRAY LOCATIONS. ENSURE LIGHTING FIXTURES ILLUMINATE THE FRONT AND REAR OF THE EQUIPMENT RACKS AND ARE MOUNTED BELOW THE LADDER TRAY.
3 SEE SHEET OEL101A FOR CONTINUATION.
4 MOUNT PHOTOCELL ON EXTERIOR WALL AT 13'-6" AFF TO TOP OF DEVICE. ORIENT TO FACE NORTH.

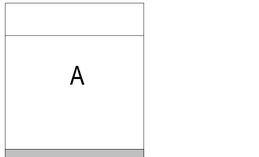

KEYPLAN

0 5' 10' 20' 30'

1/8" = 1'-0" GRAPHIC SCALE

NOTE:
IF THIS DRAWING IS LESS THAN 34" X 22"
IT IS A REDUCED SIZE DRAWING

STM	DESCRIPTION	DATE	APPR
1	MOD P00005	05/2023	
2	MOD P00006 AND MOD P00007	10/2025	

NAVFAC

NICHOLAS G. ZUBRZYCKI
LICENSE
No 64299
STATE OF
FLORIDA
PROFESSIONAL ENGINEER

SEAL

BAMFORTH
ENGINEERS CONTRACTORS

A/E INFO

APPROVED

FOR COMMANDER NAVFAC 11/21/2022

ACTIVITY
Approved by J. Scott Roberts,
Asset Management Branch Head &
Supervisory Facility Planner, PWD
Beaufort, SC via email.

SATISFACTORY TO DATE 12/15/2022

DES RLW	DRW RLW	CHK KLM	
PM/DM			KTB / RLH
BRANCH MANAGER			JAS
CHIEF ENG/ARCH			EJA
FP ENGINEER			DSN

DEPARTMENT OF THE NAVY
NAVAL FACILITIES ENGINEERING SYSTEMS COMMAND
DC CORE

NAVAL FACILITIES ENGINEERING SYSTEMS COMMAND – MID-ATLANTIC
NORFOLK, VA

MCAS BEAUFORT
BEAUFORT, SC

P-475 AIRCRAFT MAINTENANCE HANGAR - VOLUME 3 (OSF OPTION)

OSF / SHOP ANNEX - LIGHTING PLAN - GROUND FLOOR - SECTOR B

SCALE: 1/8" = 1'-0"
EPROJECT NO.: 1363603
CONSTR. CONTR. NO.
NAVFAC DRAWING NO. 12860237
SHEET 1036 OF 1412

OEL101B

DRAWFORM REVISION: 25 AUGUST 2020

Autodesk Docs://00243_NMFAT 501 F35 Maintenance Hangar/00243 F35 maint Hangar_OSF Ancp Annex EL-R17@024.rvt
11/6/2025 4:02:06 PM

LUMINAIRE REQUIREMENTS:

1. HOUSING - DIE-FORMED, COLD ROLLED STEEL, WITH ONE-PIECE LOWER REFLECTOR HAVING TEXTURED, HIGH REFLECTANCE, BAKED MATTE WHITE ENAMEL FINISH. OPTIONAL SIZES OF 2FT x 2FT AND 2FT x 4FT AVAILABLE.
2. LIGHT SOURCE - UPWARD-FACING LEDS WITH DIFFUSE LENS TO ELIMINATE DIRECT VIEW OF LIGHT SOURCE. 4000K COLOR TEMPERATURE UON, MAXIMUM BINNING TOLERANCE OF A 4-STEP MCADAM ELLIPSE, MINIMUM EFFICACY OF 90 LUMENS/WATT, WITH A MINIMUM CRI OF 80. INITIAL LUMEN OUTPUT AS INDICATED IN LUMINAIRE SCHEDULE.
4. DRIVER - REPLACEABLE, INTEGRAL, HIGH-EFFICIENCY DRIVER WITH MINIMUM 0.9 PF, OPERATING VOLTAGE OF 120-277V, THERMAL MANAGEMENT, < 20% TOTAL HARMONIC DISTORTION. STEP-DIMMABLE OR FULLY DIMMABLE AS INDICATED IN LUMINAIRE SCHEDULE.
5. CERTIFICATION - UL 1598, DAMP LOCATION, DLC QUALIFIED, AND ROHS COMPLIANT. COMPLIES WITH LM79, LM80 AND TM21 TESTING STANDARDS. UL 924 WHEN EQUIPPED WITH EMERGENCY BATTERY BACK-UP. IC RATED WHEN INDICATED.
6. MOUNTING - RECESSED IN SUSPENDED ACOUSTICAL TILE OR HARD CEILING.
7. THIS SKETCH IS A NON-PROPRIETARY GRAPHIC REPRESENTATION OF A LUMINAIRE THAT MAY MEET THE SPECIFICATION REQUIREMENTS. IT IS NOT INTENDED TO INDICATE A CERTAIN MANUFACTURER OR PREFERENCE.

VOLUMETRIC LED TROFFER

C1 FIXTURE TYPE A2D
NOT TO SCALE

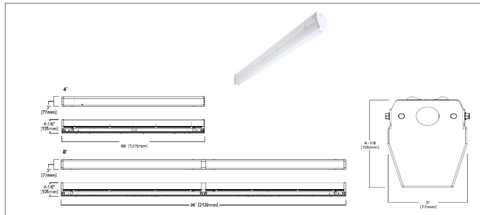

LUMINAIRE REQUIREMENTS:

1. HOUSING - DIE-FORMED, COLD-ROLLED STEEL, WITH REINFORCEMENT RIBS FOR RIGIDITY AND SPECULAR ALUMINUM OR HIGHLY-REFLECTIVE PAINTED STEEL REFLECTORS. 4FT LENGTH.
2. FINISH - MULTI-STAGE PHOSPHATE BONDING TREATMENT FINISHED WITH HIGH-REFLECTANCE, WHITE POLYESTER POWDER COAT, PAINTED AFTER FABRICATION.
3. LIGHT SOURCE - SOLID STATE LEDS WITH MINIMUM 50K HOURS RATED LIFE AT L70, 4000K CCT UON, MINIMUM 80 CRI, MAXIMUM 4-STEP MCADAM ELLIPSE BINNING TOLERANCE FOR COLOR CONSISTENCY, AND MINIMUM EFFICACY OF 100 LUMENS/WATT. INITIAL LUMEN OUTPUT AS INDICATED IN LUMINAIRE SCHEDULE.
4. DRIVER - REPLACEABLE, INTEGRAL, HIGH-EFFICIENCY DRIVER WITH MINIMUM 0.9 PF, OPERATING VOLTAGE OF 120-277V, THERMAL MANAGEMENT, < 20% TOTAL HARMONIC DISTORTION. ON-OFF CONTROL, STEP-DIMMABLE OR FULLY DIMMABLE AS INDICATED.
5. CERTIFICATION - UL 1598, DAMP LOCATION, DLC QUALIFIED, AND ROHS COMPLIANT. COMPLIES WITH LM79, LM80 AND TM21 TESTING STANDARDS. UL 924 WHEN EQUIPPED WITH EMERGENCY BATTERY BACK-UP.
6. MOUNTING - SURFACE ON CEILING OR SUSPENDED.
7. STEM HANGERS.
8. THIS SKETCH IS A NON-PROPRIETARY GRAPHIC REPRESENTATION OF A LUMINAIRE THAT MAY MEET THE SPECIFICATION REQUIREMENTS. IT IS NOT INTENDED TO INDICATE A CERTAIN MANUFACTURER OR PREFERENCE.

LED ARCHITECTURAL STRIP

C2 FIXTURE TYPES C2, C2B, C2D, C2DB
NOT TO SCALE

LUMINAIRE REQUIREMENTS:

1. HOUSING - DIE-FORMED, COLD-ROLLED STEEL, WITH REINFORCEMENT RIBS FOR RIGIDITY AND SPECULAR ALUMINUM OR HIGHLY-REFLECTIVE PAINTED STEEL REFLECTORS. 4FT LENGTH.
2. FINISH - MULTI-STAGE PHOSPHATE BONDING TREATMENT FINISHED WITH HIGH-REFLECTANCE, WHITE POLYESTER POWDER COAT, PAINTED AFTER FABRICATION.
3. LIGHT SOURCE - SOLID STATE LEDS WITH MINIMUM 50K HOURS RATED LIFE AT L70, 4000K CCT UON, MINIMUM 80 CRI, MAXIMUM 4-STEP MCADAM ELLIPSE BINNING TOLERANCE FOR COLOR CONSISTENCY, AND MINIMUM EFFICACY OF 100 LUMENS/WATT. INITIAL LUMEN OUTPUT AS INDICATED IN LUMINAIRE SCHEDULE.
4. DRIVER - REPLACEABLE, INTEGRAL, HIGH-EFFICIENCY DRIVER WITH MINIMUM 0.9 PF, OPERATING VOLTAGE OF 120-277V, THERMAL MANAGEMENT, < 20% TOTAL HARMONIC DISTORTION. ON-OFF CONTROL, STEP-DIMMABLE OR FULLY DIMMABLE AS INDICATED.
5. CERTIFICATION - UL 1598, DAMP LOCATION, DLC QUALIFIED, AND ROHS COMPLIANT. COMPLIES WITH LM79, LM80 AND TM21 TESTING STANDARDS. UL 924 WHEN EQUIPPED WITH EMERGENCY BATTERY BACK-UP.
6. MOUNTING - SURFACE ON CEILING OR SUSPENDED.
7. THIS SKETCH IS A NON-PROPRIETARY GRAPHIC REPRESENTATION OF A LUMINAIRE THAT MAY MEET THE SPECIFICATION REQUIREMENTS. IT IS NOT INTENDED TO INDICATE A CERTAIN MANUFACTURER OR PREFERENCE.

LED INDUSTRIAL STRIP

C3 FIXTURE TYPES H1, H1B, H2B
NOT TO SCALE

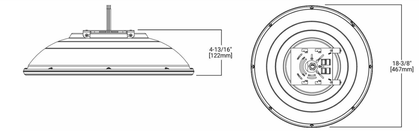

LUMINAIRE REQUIREMENTS:

1. HOUSING - DIE-CAST ALUMINUM WITH INTEGRAL, SELF-CLEANING HEAT SINK FINS, RIBS, OR EQUIVALENT PASSIVE COOLING MECHANISM. HEAT SINK SHALL BE INCORPORATED DIRECTLY INTO HOUSING TO ENSURE MAXIMUM HEAT TRANSFER AND DISSIPATION.
2. FINISH - MULTI-STAGE PRE-TREATMENT, FINISHED IN SILVER BAKED-ON POLYESTER POWDER COAT. FINISH SHALL PASS 2500 HOUR SALT SPRAY TEST PER ASTM B117.
3. POWER SUPPLY/LED DRIVER - CLASS 1 DRIVER SHALL OPERATE AT 120/277V, 50/60 HZ; OTHER VOLTAGES OPTIONAL. POWER FACTOR GREATER THAN 0.9 AND THD LESS THAN 20% AT FULL LOAD. MINIMUM EFFICACY SHALL BE 70 LM/W AT MAXIMUM 600 mA OPERATING CURRENT.
4. LED OPTICAL ASSEMBLY - NUMBER OF LED ARRAYS SHALL VARY TO ACCOMMODATE DESIRED LUMINAIRE OUTPUT. PROVIDE WITH EQUIVALENT NEMA DISTRIBUTION TYPE AS INDICATED ON FIXTURE SCHEDULE. BUG UPLIGHT RATING OF U0, WITH BACKLIGHT AND GLARE RATINGS AS DETERMINED BY LIGHTING ZONE INSTALLED. MINIMUM COLOR RENDERING INDEX (CRI) SHALL BE 70 FOR CORRELATED COLOR TEMPERATURE (CCT) OF 4000-4500 DEGREES K.
5. SURGE PROTECTION - 6 kV MINIMUM, COMPLIANT WITH ANSI C62.41.2.
6. CERTIFICATION - UL AND/OR ETL LISTED, MINIMUM IP65 RATED PER ANSI/IEC 60529, AND RoHS COMPLIANT.
7. OTHER - THE ABOVE SKETCH IS A NON-PROPRIETY GRAPHIC REPRESENTATION OF A LUMINAIRE THAT MAY MEET THE SPECIFICATION REQUIREMENTS AND IS NOT INTENDED TO INDICATE A CERTAIN MANUFACTURER'S PREFERENCE. ALL DIMENSIONS ARE NOMINAL AND VARY PER MANUFACTURER.

LED CANOPY LUMINAIRE

C4 FIXTURE TYPES G1D, G1DB
NOT TO SCALE

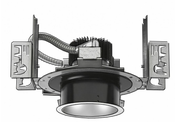

LUMINAIRE REQUIREMENTS:

1. HOUSING - DIE-FORMED, COLD-ROLLED STEEL, OR FORGED ALUMINUM WITH HEAT SINK. DRIVER MUST BE ACCESSIBLE FROM BOTTOM OF LUMINAIRE. PROVIDE T-BAR HANGERS FOR INSTALLATION IN ACOUSTICAL TILE CEILINGS OR TABS WHEN MOUNTING IN HARD CEILINGS.
2. REFLECTOR AND TRIM - SPECIFICATION GRADE, LOW IRIDESCENT, SPECULAR ALUMINUM REFLECTOR WITH POLISHED SELF FLANGE.
3. LIGHT SOURCE - SOLID STATE LEDS WITH MINIMUM 50K HOURS RATED LIFE AT L70, 4000K CCT UON, MINIMUM 80 CRI, MAXIMUM 4-STEP MCADAM ELLIPSE BINNING TOLERANCE FOR COLOR CONSISTENCY, AND MINIMUM EFFICACY OF 90 LUMENS/WATT. INITIAL LUMEN OUTPUT AS INDICATED IN LUMINAIRE SCHEDULE.
4. DRIVER - REPLACEABLE, INTEGRAL, HIGH-EFFICIENCY DRIVER WITH MINIMUM 0.9 PF, OPERATING VOLTAGE OF 120-277V, THERMAL MANAGEMENT, < 20% TOTAL HARMONIC DISTORTION. ON-OFF CONTROL, STEP-DIMMABLE OR FULLY DIMMABLE AS INDICATED.
5. CERTIFICATION - UL 1598, DAMP LOCATION, DLC QUALIFIED, AND ROHS COMPLIANT. COMPLIES WITH LM79, LM80 AND TM21 TESTING STANDARDS. UL 924 WHEN EQUIPPED WITH EMERGENCY BATTERY BACK-UP.
6. MOUNTING - RECESSED IN HARD OR ACOUSTICAL TILE CEILING.
7. THIS SKETCH IS A NON-PROPRIETARY GRAPHIC REPRESENTATION OF A LUMINAIRE THAT MAY MEET THE SPECIFICATION REQUIREMENTS. IT IS NOT INTENDED TO INDICATE A CERTAIN MANUFACTURER OR PREFERENCE.

LED RECESSED DOWNLIGHT

A1 FIXTURE TYPES E1B, E2B
NOT TO SCALE

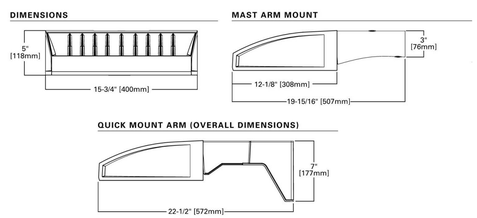

LUMINAIRE REQUIREMENTS:

1. HOUSING - DIE-CAST ALUMINUM WITH INTEGRAL PASSIVE COOLING MECHANISM. HEAT SINK SHALL BE INCORPORATED DIRECTLY INTO HOUSING OR DRIVER COMPARTMENT TO ENSURE MAXIMUM HEAT TRANSFER AND DISSIPATION.
2. FINISH - MULTI-STAGE PRE-TREATMENT, FINISHED WITH BAKED-ON POLYESTER POWDER COAT. FINISH SHALL PASS 2500 HOUR SALT SPRAY TEST PER ASTM B117. DARK BRONZE FINISH.
3. POWER SUPPLY/LED DRIVER - CLASS 1 DRIVER SHALL OPERATE AT 120/277 VOLTS, 50/60 HZ; POWER FACTOR GREATER THAN 0.9 AND THD LESS THAN 20% AT FULL LOAD. MINIMUM EFFICACY SHALL BE 60 LM/W AT MAXIMUM 600mA OPERATING CURRENT.
4. LED OPTICAL ASSEMBLY - PRECISION MOLDED ACRYLIC LENS PROVIDED FOR MULTIPLE HIGH-POWERED LEDS PRODUCING NEMA DISTRIBUTION TYPE AS NOTED ON FIXTURE SCHEDULE. BUG UPLIGHT RATING OF U0, WITH GLARE RATING AS DETERMINED BY LIGHTING ZONE INSTALLED.
5. CERTIFICATION - UL AND/OR ETL LISTED FOR DAMP OR WET LOCATIONS, AND RoHS COMPLIANT.
6. OTHER - THE ABOVE SKETCH IS A NON-PROPRIETY GRAPHIC REPRESENTATION OF A LUMINAIRE THAT MAY MEET THE SPECIFICATION REQUIREMENTS AND IS NOT INTENDED TO INDICATE A CERTAIN MANUFACTURER'S PREFERENCE. ALL DIMENSIONS ARE NOMINAL AND VARY PER MANUFACTURER.

LED WALL PACK

A2 FIXTURE TYPES W1DB, W2DB
NOT TO SCALE

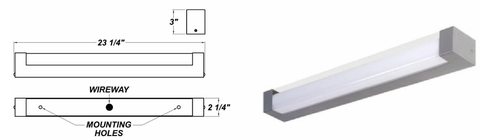

LUMINAIRE REQUIREMENTS:

1. HOUSING - BRUSHED NICKEL WITH OPAL MATT ACRYLIC LENS.
2. LIGHT SOURCE - LEDS MOUNTED BEHIND MATT ACRYLIC LENS. INITIAL LUMEN OUTPUT AS INDICATED IN LUMINAIRE SCHEDULE.
3. DRIVER - REPLACEABLE, INTEGRAL, HIGH-EFFICIENCY DRIVER WITH MINIMUM 0.9 PF, OPERATING VOLTAGE OF 120-277V, THERMAL MANAGEMENT, < 20% TOTAL HARMONIC DISTORTION.
4. CERTIFICATION - UL 1598, SHALL COMPLY WITH LM79, LM80 AND TM21 TESTING STANDARDS.
5. MOUNTING - SURFACE MOUNT TO WALL.
6. THIS SKETCH IS A NON-PROPRIETARY GRAPHIC REPRESENTATION OF A LUMINAIRE THAT MAY MEET THE SPECIFICATION REQUIREMENTS. IT IS NOT INTENDED TO INDICATE A CERTAIN MANUFACTURER OR PREFERENCE.

LED VANITY FIXTURE

A3 FIXTURE TYPE V1
NOT TO SCALE

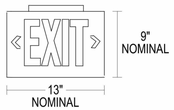

LUMINAIRE REQUIREMENTS:

1. HOUSING - HIGH-IMPACT, UV-STABILIZED, INJECTION-MOLDED THERMOPLASTIC. SINGLE OR DOUBLE-FACED AS INDICATED.
2. LETTERS/CHEVRONS - MINIMUM 6" HIGH WITH 3/4" STROKE. GREEN LETTERS AS INDICATED. PROVIDE CHEVRONS AS INDICATED EITHER LEFT, RIGHT OR BOTH DIRECTIONS AS INDICATED. CHEVRONS PUNCHED OUT THROUGH HOUSING AS REQUIRED.
3. EMERGENCY PACK - SOLID-STATE, CONSTANT-CURRENT TYPE BATTERY CHARGER WITH MAINTENANCE-FREE, NICKEL-CADMIUM BATTERY, AC-ON INDICATOR LAMP AND TEST SWITCH.
4. MOUNTING - UNIVERSAL MOUNTING KIT FOR CEILING, WALL OR END-OF-FIXTURE MOUNTING.
5. ILLUMINATION - PROVIDED GREEN HIGH-OUTPUT LEDS INSIDE OF FIXTURE HOUSING. PROVIDE POLYSTYRENE DIFFUSER IN COLOR INDICATED WITH FREQUENCY-MATCHED SILKSCREEN COATING FOR MAXIMUM LED LIGHT OUTPUT.
6. CERTIFICATION - UL LISTED AND CERTIFIED FOR DAMP LOCATIONS.

LED EXIT SIGN

A4 FIXTURE TYPE X1
NOT TO SCALE

NOTE:
IF THIS DRAWING IS LESS THAN 34" X 22"
IT IS A REDUCED SIZE DRAWING

STM	DESCRIPTION	DATE	APPR
1	MOD P00005	05/2023	
2	MOD P00006 AND MOD P00007	10/2025	

NAVFAC

NICHOLAS G. ZUBRZYCKI
LICENSE
No 64299
STATE OF
FLORIDA
PROFESSIONAL ENGINEER

SEAL

BAMFORTH
ENGINEERS CONTRACTORS

A/E INFO

APPROVED

FOR COMMANDER NAVFAC 11/21/2025

ACTIVITY
Approved by J. Scott Roberts,
Asset Management Branch Head &
Supervisory Facility Planner, PWD
Beaufort, SC via email.

SATISFACTORY TO DATE 12/15/2022

DES RLW	DRW RLW	CHK KLM	
PM/DM		KTB / RLH	
BRANCH MANAGER		JAS	
CHIEF ENG/ARCH		EJA	
FP ENGINEER		DSN	

DEPARTMENT OF THE NAVY
NAVAL FACILITIES ENGINEERING SYSTEMS COMMAND
DC CORE:
MCAS BEAUFORT

NAVAL FACILITIES ENGINEERING SYSTEMS COMMAND ~ MID-ATLANTIC
NORFOLK, VA

BEAUFORT, SC

P-475 AIRCRAFT MAINTENANCE HANGAR - VOLUME 3 (OSF OPTION)

LIGHTING FIXTURE DETAILS

SCALE: NTS
EPROJECT NO.: 1363603
CONSTR. CONTR. NO.
NAVFAC DRAWING NO. 12860238
SHEET 1037 OF 1412

OEL501

DRAWFORM REVISION: 25 AUGUST 2020

Autodesk Docs://2042 MF-A1 302 FS Maintenance Hangar/2042-175 -nasm Hangar_OSF Hrsp Annex BL-RVT2024.rvt
11/6/2025 4:02:12 PM

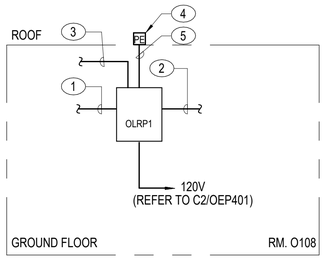

KEY NOTES: 00 (C1/OEL601)

1 LIGHTING CIRCUIT FROM LIGHTING BRANCH PANEL. SEE FLOOR PLANS FOR CIRCUITS. (TYPICAL)
2 CONTROLLED LIGHT CIRCUIT TO FIXTURES. SEE FLOOR PLANS FOR CIRCUITS. (TYPICAL)
3 1/2" CONDUIT WITH FIRE ALARM INTERFACE WIRING. RELAYS SERVING EGRESS LIGHTING CIRCUITS WILL CLOSE UPON A FIRE ALARM SIGNAL ENSURING EGRESS LIGHT FIXTURES ARE ON DURING A FIRE ALARM EVENT.
4 WALL MOUNTED PHOTOCELL. SEE OEL101B FOR LOCATION.
5 1/2" CONDUIT WITH LOW VOLTAGE CONTROL WIRING AS REQUIRED.

C1 RELAY PANEL LIGHTING CONTROL SYSTEM CONNECTION DIAGRAM
NOT TO SCALE

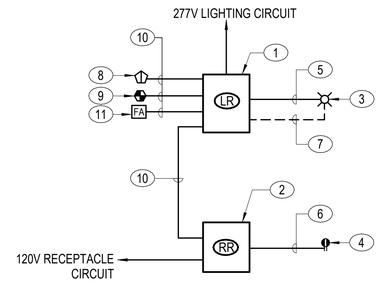

KEY NOTES (C3/OEL601) 00

1 TYPICAL, DIGITAL, LOCAL LIGHTING RELAY PACK.
2 TYPICAL, DIGITAL, LOCAL RECEPTACLE RELAY PACK.
3 TYPICAL CONTROLLED LIGHT FIXTURES.
4 TYPICAL CONTROLLED RECEPTACLES.
5 CONTROLLED LIGHTING CIRCUIT AS INDICATED ON PLANS.
6 CONTROLLED RECEPTACLE CIRCUIT AS INDICATED ON PLANS.
7 1/2" CONDUIT WITH DIMMING WIRING AS INDICATED ON PLANS.
8 TYPICAL DIGITAL LIGHTING CONTROL SWITCH.
9 TYPICAL DIGITAL OCCUPANCY SENSOR.
10 1/2" CONDUIT WITH LOW VOLTAGE CONTROL WIRING AS REQUIRED.
11 TYPICAL FIRE ALARM CONTROL RELAY TO BYPASS AUTOMATIC LIGHTING CONTROLS AND SHUNT LIGHTING FIXTURES TO FULL OUTPUT UPON FIRE ALARM SYSTEM ACTIVATION.

C3 TYPICAL DIGITAL LIGHTING AND PLUGLOAD CONTROL SYSTEM CONNECTION DIAGRAM
NOT TO SCALE

OLRP1 RELAY PANEL SCHEDULE

RELAY NUMBER	CIRCUIT		LOAD DESCRIPTION	CONTROLS	
	PANEL	CIRCUIT #		CONTROL SEQUENCE CODE	CONTROL STATION ID
1	1OLN1	4	LTG - EXTERIOR	A	--
2	1OLN1	6	LTG - EXTERIOR	A	--
3	1OLN1	8	LTG - SITE LIGHTING	A	--

RELAY PANEL NOTES:
1. RELAY PANEL, INCLUDING RELAYS, WILL HAVE A SHORT CIRCUIT CURRENT RATING OF 65,000A.
2. PROVIDE 6 SPACES PER RELAY PANEL FOR FUTURE RELAYS.

RELAY PANEL CONTROL SEQUENCE CODES

SEQUENCE CODE	CONTROL FUNCTIONS	
	TIME CLOCK	PHOTOCELL
A	ON AT DUSK, OFF AT DAWN.	OVERRIDE ON IF INADEQUATE DAYLIGHT.

NOTES:
1. AUTOMATIC TIME CLOCK ON AND OFF TIMES WILL BE COORDINATED WITH THE CONTRACTING OFFICER.

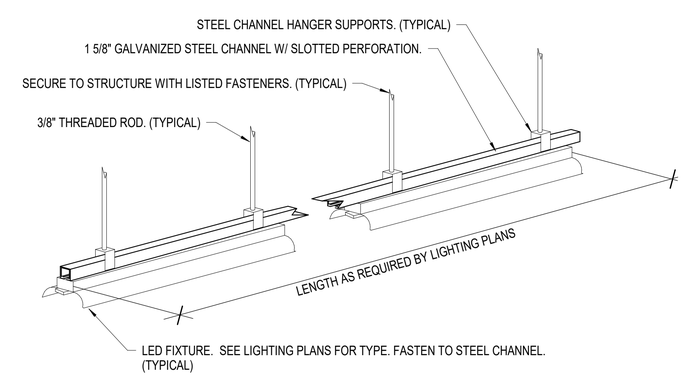

NOTES:
A. PROVIDE ALL HARDWARE AND ACCESSORIES AS REQUIRED TO FACILITATE INSTALLATION.
B. VERTICAL THREADED ROD SUPPORTS WILL BE PROVIDED ON EACH END OF ROW, AND SPACED EVENLY AT APPROXIMATELY 48" ON CENTER.

A3 ROOM O111 AND O102 LIGHTING FIXTURE MOUNTING DETAIL
NOT TO SCALE

NOTE:
IF THIS DRAWING IS LESS THAN 34" X 22"
IT IS A REDUCED SIZE DRAWING

SYM	DESCRIPTION	DATE	APPR
1	MOD P00005	05/2023	
2	MOD P00006 AND MOD P00007	10/2025	

NAVFAC

NICHOLAS G. ZUBRZYCKI
LICENSE No 64299
STATE OF FLORIDA
PROFESSIONAL ENGINEER

BAMFORTH ENGINEERS & CONTRACTORS

AE INFO

APPROVED

FOR COMMANDER NAVFAC 11/21/2022

ACTIVITY: Approved by J. Scott Roberts, Asset Management Branch Head & Supervisory Facility Planner, PWD Beaufort, SC via email.

SATISFACTORY TO DATE 12/15/2022

DES RLW	DRW RLW	CHK KLM	
PM/DM			KTB / RLH
BRANCH MANAGER			JAS
CHIEF ENG/ARCH			EJA
FP ENGINEER			DSN

DEPARTMENT OF THE NAVY
NAVAL FACILITIES ENGINEERING SYSTEMS COMMAND
DC CODE:
MCAS BEAUFORT

NAVAL FACILITIES ENGINEERING SYSTEMS COMMAND ~ MID-ATLANTIC
NORFOLK, VA

BEAUFORT, SC

P-475 AIRCRAFT MAINTENANCE HANGAR - VOLUME 3 (OSF OPTION)

LIGHTING CONTROL DIAGRAMS AND SCHEDULES

SCALE: As indicated
EPROJECT NO.: 1363603
CONSTR. CONTR. NO.
NAVFAC DRAWING NO. 12860239
SHEET 1038 OF 1412

OEL601

DRAWFORM REVISION: 25 AUGUST 2020

Autodesk Docs://0042 \ MF-A1 302 F8 Maintenance Hangar/0042-F8 maint Hangar_OSF Hog Annex Bl.-R/V2024.rvt
11/9/2023 4:02:18 PM

LIGHTING FIXTURES SCHEDULE

FIXTURE TYPE	Apparent Load	FIXTURE DESCRIPTION	MANUFACTURER	MODEL	VOLTAGE	LAMP	LUMEN	CCT	CRI	MOUNTING	NOTES	Include In Interior Ashrae 90.1	Circuit Load	Type Mark	DETAIL REFERENCE
A2D	29 VA	2' X 4' VOLUMETRIC LED TROFFER WITH COLD ROLLED STEEL HOUSING, SMOOTH FROSTED ACRYLIC LENS, AND MATTE WHITE ENAMEL FINISH. PROVIDE DIMMING DRIVER.			120V	LED	4142	4000K	80	RECESSED		Yes	29 VA		C1/OEL501
C2	56 VA	4'L LOW BAY LED STRIP FIXTURE WITH COLD ROLLED STEEL HOUSING, WIDE SYMMETRIC OPTICAL DISTRIBUTION, MATTE WHITE ENAMEL FINISH, AND FROSTED ACRYLIC LENS.	ILP-INC	FZ	120V	LED	8802	4000K	80	SUSPENDED	SUSPEND AT 12'-2" AFF TO BOTTOM UON. FIXTURE SHALL BE UL LISTED AS A RACEWAY SUITABLE FOR THROUGH WIRING.		52 VA		C2/OEL501
C2B	56 VA	4'L LOW BAY LED STRIP FIXTURE WITH COLD ROLLED STEEL HOUSING, WIDE SYMMETRIC OPTICAL DISTRIBUTION, MATTE WHITE ENAMEL FINISH, AND FROSTED ACRYLIC LENS. PROVIDE WITH EMERGENCY BATTERY.	ILP-INC	FZ	120V	LED	8802	4000K	80	SUSPENDED	SUSPEND AT 12'-2" AFF TO BOTTOM UON. FIXTURE SHALL BE UL LISTED AS A RACEWAY SUITABLE FOR THROUGH WIRING. PROVIDE INTEGRAL BATTERY WITH 90 MINUTE RUN TIME. SEE SPECIFICATION 26 51 00 FOR MINIMUM EMERGENCY DRIVER POWER REQUIREMENTS		56 VA		C2/OEL501
C2D	56 VA	4'L LOW BAY LED STRIP FIXTURE WITH COLD ROLLED STEEL HOUSING, WIDE SYMMETRIC OPTICAL DISTRIBUTION, MATTE WHITE ENAMEL FINISH, AND FROSTED ACRYLIC LENS. PROVIDE WITH DIMMING DRIVER	ILP-INC	FZ	120V	LED	8802	4000K	80	SUSPENDED	SUSPEND AT 12'-2" AFF TO BOTTOM UON. FIXTURE SHALL BE UL LISTED AS A RACEWAY SUITABLE FOR THROUGH WIRING.		56 VA		C2/OEL501
C2DB	56 VA	4'L LOW BAY LED STRIP FIXTURE WITH COLD ROLLED STEEL HOUSING, WIDE SYMMETRIC OPTICAL DISTRIBUTION, MATTE WHITE ENAMEL FINISH, AND FROSTED ACRYLIC LENS. PROVIDE WITH EMERGENCY BATTERY AND DIMMING DRIVER.	ILP-INC	FZ	120V	LED	8802	4000K	80	SUSPENDED	SUSPEND AT 12'-2" AFF TO BOTTOM UON. FIXTURE SHALL BE UL LISTED AS A RACEWAY SUITABLE FOR THROUGH WIRING. PROVIDE INTEGRAL BATTERY WITH 90 MINUTE RUN TIME. SEE SPECIFICATION 26 51 00 FOR MINIMUM EMERGENCY DRIVER POWER REQUIREMENTS		56 VA		C2/OEL501
E1B	25 VA	4" DIAMETER RECESSED LED DOWNLIGHT WITH GALVANIZED STEEL HOUSING, INTEGRAL JUNCTION BOX, REGRESSED CLEAR TEMPERED LENS, DIFFUSE HAZE REFLECTOR, POLISHED SELF FLANGE, 62 DEGREE BEAM, AND MATTE WHITE FINISH. PROVIDE WITH EMERGENCY BATTERY.	LITHONIA	DOM LED	120V	LED	1000	4000K	80	RECESSED		Yes	25 VA		A1/OEL501
E2B	25 VA	6" DIAMETER X 4.2" DEEP RECESSED LED DOWNLIGHT WITH GALVANIZED STEEL HOUSING, INTEGRAL JUNCTION BOX, SEMI-SPECULAR REFLECTOR, 55 DEGREE BEAM. PROVIDE WITH EMERGENCY BATTERY.	LITHONIA	DOM LED	120V	LED	1000	4000K	80	RECESSED	UL WET LISTED.	Yes	25 VA		A1/OEL501
G1D	28 VA	18" DIAMETER X 4-13/16" DEEP PENDANT PARKING GARAGE FIXTURE WITH DIE-CAST ALUMINUM HOUSING, CONCENTRATED OPTICAL DISTRIBUTION, 2.5MIL SILVER POWDER COAT FINISH, STANDARD 0-10V DIMMING, AND IP66 RATING.	Cooper Lighting	TT TopTier LED	120V	LED	4000	4000K	70	SUSPENDED	MOUNT AT 9' 0" AFF TO BOTTOM UON.				C4/OEL501
G1DB	28 VA	18" DIAMETER X 4-13/16" DEEP PENDANT PARKING GARAGE FIXTURE WITH DIE-CAST ALUMINUM HOUSING, CONCENTRATED OPTICAL DISTRIBUTION, 2.5MIL SILVER POWDER COAT FINISH, STANDARD 0-10V DIMMING, AND IP66 RATING. PROVIDE WITH EMERGENCY BATTERY.	Cooper Lighting	TT TopTier LED	120V	LED	4000	4000K	70	SUSPENDED	MOUNT AT 9' 0" AFF TO BOTTOM UON. PROVIDE INTEGRAL BATTERY WITH 90 MINUTE RUN TIME.				C4/OEL501
H1	40 VA	4' LENSED LED STRIP FIXTURE, 22-GAUGE DIE-FORMED STEEL WITH WHITE POLYESTER POWDER COAT FINISH, 0.125" THICK FROSTED ACRYLIC LENS.	ILP-INC	FZ	120V	LED	3138	4000K	80	SUSPENDED	SUSPEND AT 9'-0" AFF TO BOTTOM UON. FIXTURE SHALL BE UL LISTED AS A RACEWAY SUITABLE FOR THROUGH WIRING.		40 VA		C3/OEL501
H1B	40 VA	4' LENSED LED STRIP FIXTURE, 22-GAUGE DIE-FORMED STEEL WITH WHITE POLYESTER POWDER COAT FINISH, 0.125" THICK FROSTED ACRYLIC LENS. PROVIDE WITH EMERGENCY BATTERY.	ILP-INC	FZ	120V	LED	3138	4000K	80	SUSPENDED	SUSPEND AT 9'-0" AFF TO BOTTOM UON. FIXTURE SHALL BE UL LISTED AS A RACEWAY SUITABLE FOR THROUGH WIRING. PROVIDE INTEGRAL BATTERY WITH 90 MINUTE RUN TIME.		40 VA		C3/OEL501
H2B	40 VA	4' LENSED LED STRIP FIXTURE, 22-GAUGE DIE-FORMED STEEL WITH WHITE POLYESTER POWDER COAT FINISH, 0.125" THICK FROSTED ACRYLIC LENS. PROVIDE WITH EMERGENCY BATTERY.	ILP-INC	FZ	120V	LED	5858	4000K	80	SUSPENDED	SUSPEND AT 9'-0" AFF TO BOTTOM UON. FIXTURE SHALL BE UL LISTED AS A RACEWAY SUITABLE FOR THROUGH WIRING. PROVIDE INTEGRAL BATTERY WITH 90 MINUTE RUN TIME.		40 VA		C3/OEL501
V1	12 VA	23" LED VANITY FIXTURE WITH MATTE SILVER POWDER COAT FINISH, MATTE WHITE ACRYLIC INNER DIFFUSER, OPAL MATTE ACRYLIC OUTER DIFFUSED LENS.	TERON	VICEROY	120V	LED	1400	4000K	86	WALL	MOUNT AT 1" ABOVE TOP OF MIRROR FRAME TO BOTTOM.		12 VA		A3/OEL501
W1DB	113 VA	EXTERIOR WALL MOUNTED FIXTURE WITH DIE CAST ALUMINUM ENCLOSURE, IP66 RATED HOUSING, 2.5MIL THICKNESS DARK BRONZE POWDER COAT FINISH, AND TYPE IV FORWARD THROW DISTRIBUTION. PROVIDE WITH INTEGRAL DIMMING OCCUPANCY SENSOR AND EMERGENCY BATTERY. INTEGRAL CONTROLS SHALL BE PROGRAMMED SUCH THAT LIGHT OUTPUT IS AT 70% FULL BRIGHTNESS FROM DUSK TO DAWN, UNLESS MOTION IS DETEDCTED, WHICH SHALL TRIGGER THE FIXTURE TO SWITCH TO 100% FULL BRIGHTNESS WITH A 10 MINUTE VACANCY TIMEOUT.			120V	LED	6542	4000K	80	WALL	MOUNTED AT 15'-0" AFG TO BOTTOM UON.	Yes	113 VA		A2/OEL501
W2DB	113 VA	EXTERIOR WALL MOUNTED FIXTURE WITH DIE CAST ALUMINUM ENCLOSURE, IP66 RATED HOUSING, 2.5MIL THICKNESS DARK BRONZE POWDER COAT FINISH, AND TYPE IV WIDE DISTRIBUTION. PROVIDE WITH INTEGRAL DIMMING OCCUPANCY SENSOR AND EMERGENCY BATTERY. INTEGRAL CONTROLS SHALL BE PROGRAMMED SUCH THAT LIGHT OUTPUT IS AT 70% FULL BRIGHTNESS FROM DUSK TO DAWN, UNLESS MOTION IS DETEDCTED, WHICH SHALL TRIGGER THE FIXTURE TO SWITCH TO 100% FULL BRIGHTNESS WITH A 10 MINUTE VACANCY TIMEOUT.			120V	LED	6458	4000K	80	WALL	MOUNTED AT 15'-0" AFG TO BOTTOM UON.	Yes	113 VA		A2/OEL501
X1	2 VA	SINGLE FACE LED EXIT SIGN WITH ALUMINUM HOUSING, INTEGRAL NICKEL CADMIUM BATTERY AND GREEN LETTERS.			120V	LED	N/A	N/A	N/A	UNIVERSAL	WHERE WALL-MOUNTED ABOVE DOOR, MOUNT AT 1" ABOVE DOOR FRAME TO BOTTOM OF SIGN.	No	2 VA		A4/OEL501

NOTES:

SHEET NOTES:

A. LED DRIVER ASSEMBLIES SERVING RECESSED DOWN LIGHTS SHALL BE REMOVABLE AND SERVICEABLE FROM THE FIXTURE APERTURE. PROVIDE LEAD LENGTHS THAT ARE ADEQUATE FOR "DROPPING" THE DRIVER ASSEMBLY BELOW THE FIXTURE APERTURE.
B. ALL LED 2'X4' FIXTURES SHALL BE INHERENTLY DIMMABLE WITH A CCT OF 4000K AND A CRI OF 80 UNLESS OTHERWISE NOTED.
C. ALL LED DOWNLIGHT FIXTURES SHALL BE INHERENTLY DIMMABLE WITH A CCT OF 4000K AND A CRI OF 80 UNLESS OTHERWISE NOTED.
D. LIGHTING FIXTURES SHALL NOT BE USED AS A RACEWAY UNLESS UL LISTED AS SUCH.
E. COORDINATE RECESSED LIGHTING FIXTURES WITH THE CEILING MATERIAL IN WHICH THEY ARE INSTALLED AND PROVIDE SUITABLE MOUNTING TRIM.
F. DIMMING DRIVERS SHALL BE COMPATIBLE WITH ASSOCIATED LIGHTING CONTROL SWITCH OR RELAY AND SHALL ALLOW FOR 10% TO 100% DIMMING RANGE OR STEP DIMMING AS REQUIRED.
G. EMERGENCY DESIGNATED EGRESS FIXTURES INDICATED ON CONTRACT DRAWINGS AND CONNECTED TO BRANCH CIRCUITS WITH GENERATOR BACK-UP SOURCE SHALL NOT BE PROVIDED WITH INTEGRAL BATTERY BACK-UP.

NOTE:
IF THIS DRAWING IS LESS THAN 34" X 22"
IT IS A REDUCED SIZE DRAWING

STM	DESCRIPTION	DATE	APPR
1	MOD P00005	05/2023	
2	MOD P00006 AND MOD P00007	10/2025	

NAVFAC

NICHOLAS G. ZUBRZYCKI
LICENSE
No 64299
STATE OF FLORIDA
PROFESSIONAL ENGINEER
SEAL

BAMFORTH
ENGINEERS - CONTRACTORS
AE INFO

APPROVED
FOR COMMANDER NAVFAC 11/21/2025

ACTIVITY Approved by J. Scott Roberts, Asset Management Branch Head & Supervisory Facility Planner, PWD Beaufort, SC via email.

SATISFACTORY TO DATE 12/15/2022

DES	RLW	DRW	RLW	CHK	KLM
PM/DM	KTB / RLH				
BRANCH MANAGER	JAS				
CHIEF ENG/ARCH	EJA				
FP ENGINEER	DSN				

NAVAL FACILITIES ENGINEERING SYSTEMS COMMAND
NORFOLK, VA

DEPARTMENT OF THE NAVY
NAVAL FACILITIES ENGINEERING SYSTEMS COMMAND ~ MID-ATLANTIC
DC CORE

MCAS BEAUFORT
BEAUFORT, SC
P-475 AIRCRAFT MAINTENANCE HANGAR - VOLUME 3 (OSF OPTION)

LIGHTING FIXTURE SCHEDULE

SCALE:
EPROJECT NO.: 1363603
CONSTR. CONTR. NO.
NAVFAC DRAWING NO. 12860240
SHEET 1039 OF 1412

OEL701

DRAWFORM REVISION: 28 AUGUST 2020

Autodesk Docs://00043 NAFAT 501 F35 Maintenance Hangar/00043 F35 maint Hangar_OSF Ang Annex EL.RVT2024-r4
11/6/2025 4:42:23 PM

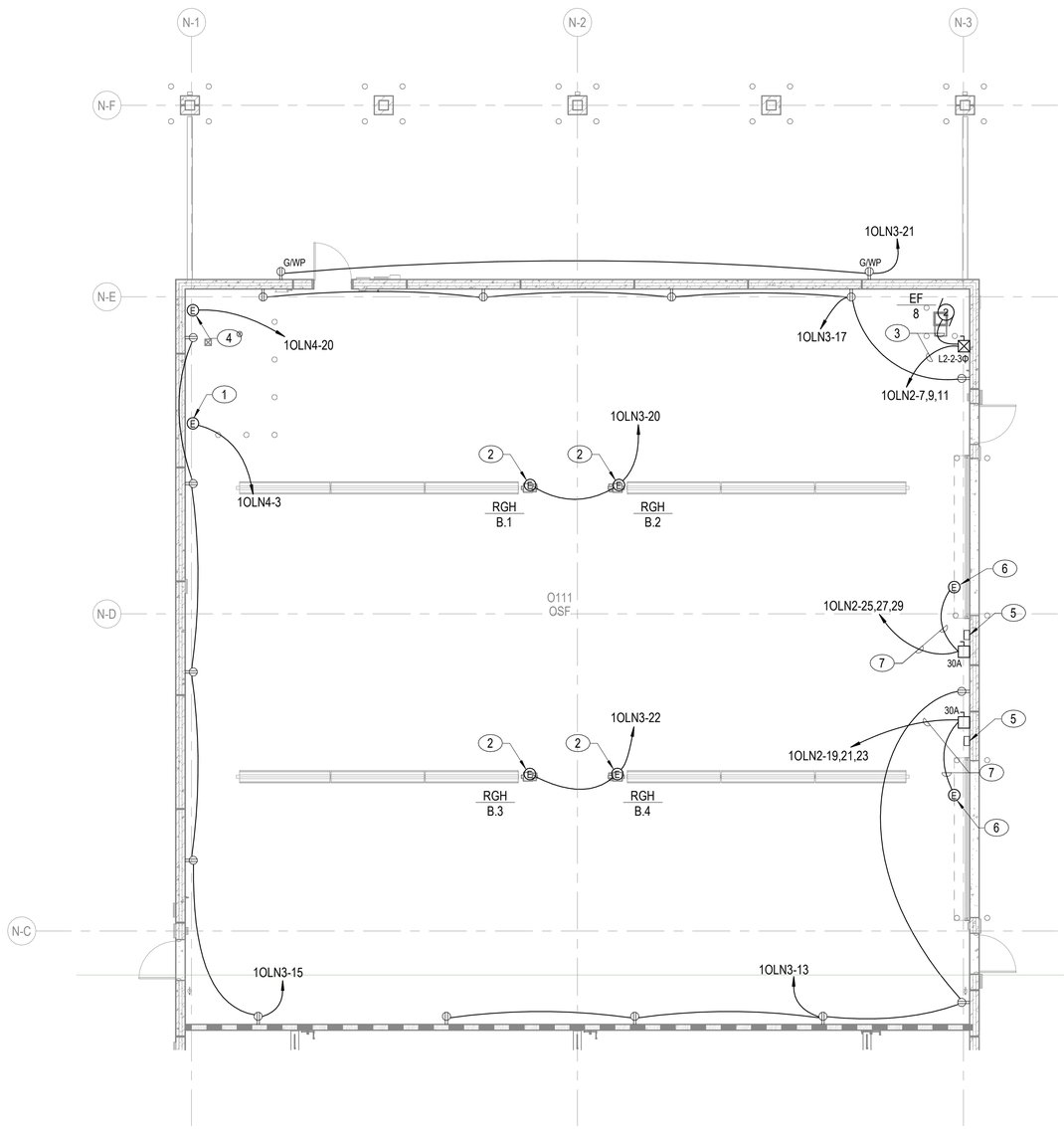

A1 POWER PLAN, GROUND FLOOR, - SECTOR A

1/8" = 1'-0"

NOTES:

KEY NOTES (00)

1 CONNECTION TO ELECTRONIC TRAP PRIMER.

2 CONNECTION TO RADIANT HEATER IGNITER. PROVIDE 120V, 20A TOGGLE SWITCH DISCONNECT ADJACENT TO RADIANT HEATER IGNITER ENCLOSURE. CONTROLS BY DIVISION 23.

3 SEE MOTOR STARTER SCHEDULE ON SHEET OEP700 FOR CONDUIT AND WIRE SIZE.

4 CONNECTION TO NITROGEN GENERATOR. PROVIDE TOGGLE SWITCH DISCONNECT ADJACENT TO EQUIPMENT.

5 AUTOMATIC ROLL UP DOOR CONTROLLER PROVIDED WITH AUTOMATIC ROLL UP DOOR. MOUNT AT 48" AFF TO BOTTOM. PROVIDE 3/4" EMPTY CONDUIT WITH PULL STRING FROM CONTROLLER TO AUTOMATIC ROLL UP DOOR MOTOR CONTROL SECTION. TERMINATE CONDUIT AS DIRECTED BY THE AUTOMATIC ROLL UP DOOR PROVIDER.

6 CONNECTION TO AUTOMATIC ROLL UP DOOR.

7 1/2"C - (3)#12 + (1)#12 GND.

A
B

KEYPLAN

PLAN NORTH

N

0 5' 10' 20' 30'

1/8" = 1'-0" GRAPHIC SCALE

NOTE:
IF THIS DRAWING IS LESS THAN 34" X 22"
IT IS A REDUCED SIZE DRAWING

STM	DESCRIPTION	DATE	APPR
1	MOD P00005	05/2023	
2	MOD P00006 AND MOD P00007	10/2025	

NAVFAC

NICHOLAS G. ZUBRZYCKI
LICENSE
No 64299
STATE OF
FLORIDA
PROFESSIONAL ENGINEER

SEAL

BAMFORTH
ENGINEERS + CONTRACTORS

AE INFO

APPROVED

FOR COMMANDER NAVFAC 11 21 2025

ACTIVITY
Approved by J. Scott Roberts,
Asset Management Branch Head &
Supervisory Facility Planner, PWD
Beaufort, SC via email.

SATISFACTORY TO DATE 12/15/2022

DES	RLW	DRW	RLW	CHK	KLM

PM/DM	KTB / RLH
BRANCH MANAGER	JAS
CHIEF ENG/ARCH	EJA
FP ENGINEER	DSN

DEPARTMENT OF THE NAVY
NAVAL FACILITIES ENGINEERING SYSTEMS COMMAND
DC CORE
NAVAL FACILITIES ENGINEERING SYSTEMS COMMAND – MID-ATLANTIC
NORFOLK, VA
MCAS BEAUFORT
BEAUFORT, SC

P-475 AIRCRAFT MAINTENANCE HANGAR - VOLUME 3 (OSF OPTION)

OSF / SHOP ANNEX - POWER PLAN - GROUND FLOOR - SECTOR A

SCALE:	1/8" = 1'-0"
EPROJECT NO.:	1363603
CONSTR. CONTR. NO.	
NAVFAC DRAWING NO.	12860241
SHEET	1040 OF 1412

OEP101A

DRAWFORM REVISION: 25 AUGUST 2020

Autodesk Docs://20243_NAVFAC SOUTH/P475 Maintenance Hangar/20243 F35 Maintenance Hangar_OSF shop Annex EL R/P20243-r4
11/5/2025 4:02:31 PM

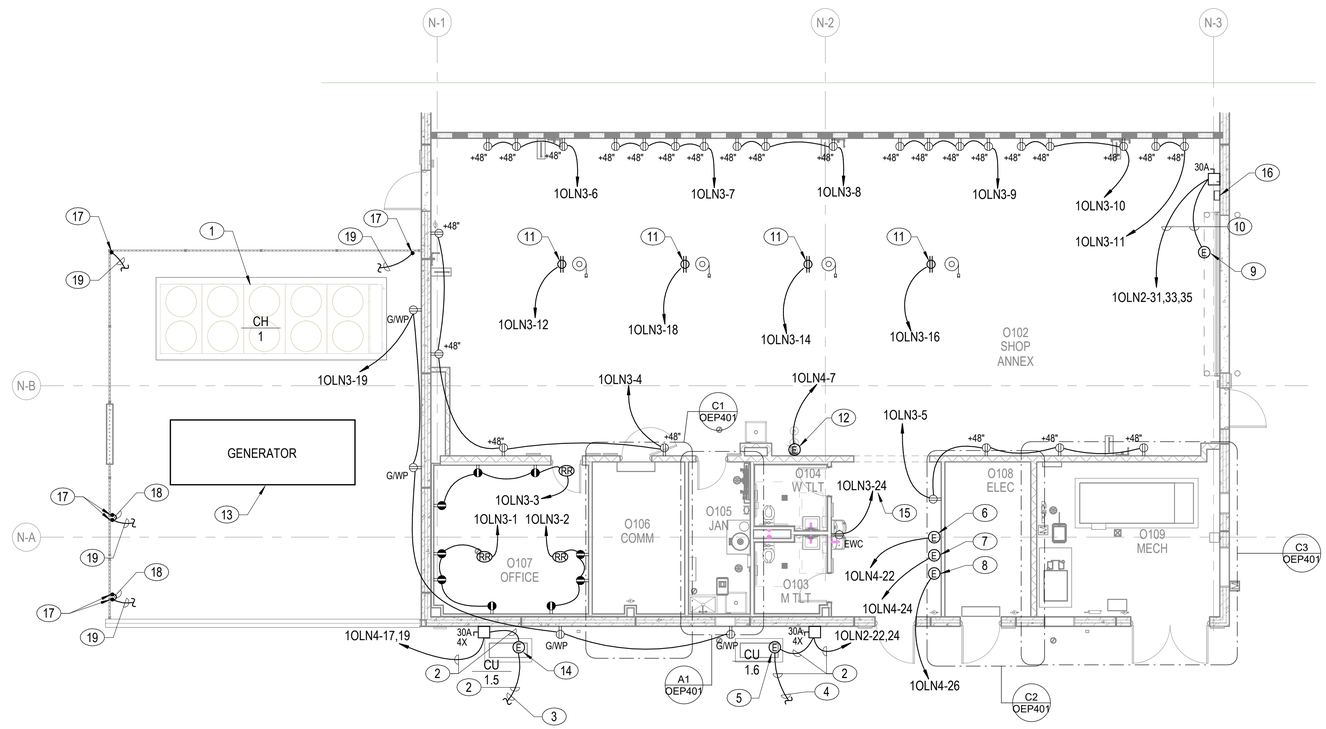

A1 POWER PLAN, GROUND FLOOR, - SECTOR B

1/8" = 1'-0"

NOTES:

KEY NOTES (00)

1 CHILLER IS SHOWN FOR REFERENCE ONLY. SEE C1/ES406 IN VOLUME 1 FOR ELECTRICAL CONNECTIONS.

2 1/2"C -(2)#10 + (1)#10 GND.

3 TO AC-1.5 LOCATED IN COMM O106. SEE C1/OEP401 FOR CONTINUATION. CONTROL WIRING PROVIDED BY DIVISION 23.

4 TO AC-1.6 LOCATED IN ELEC O108. SEE C2/OEP401 FOR CONTINUATION. CONTROL WIRING PROVIDED BY DIVISION 23.

5 CONNECTION TO CONDENSING UNIT CU/1.6.

6 CONNECTION TO MASS NOTIFICATION TRANSCEIVER.

7 CONNECTION TO FIRE ALARM/MASS NOTIFICATION CONTROL PANEL.

8 CONNECTION TO FIRE ALARM RADIO TRANSMITTER.

9 CONNECTION TO AUTOMATIC ROLL UP DOOR.

10 1/2"C - (3)#12 + (1)#12 GND.

11 125V, 20A DUPLEX RECEPTACLE IN SINGLE GANG SURFACE MOUNTED BOX FOR CONNECTION TO RETRACTABLE CORD REEL. SUPPORT RECEPTACLE FROM STRUCTURE ABOVE AND MOUNT IN A VERTICLE POSITION SUCH THAT THE CORD CAN NOT BE PLUGGED IN UPSIDE DOWN.

12 CONNECTION TO EYE WASH STATION TO SERVE SIREN AND HORN. COORDINATE ROUGH-IN REQUIREMENTS WITH EYEWASH INSTALLER.

13 THIS GENERATOR SERVES THE EMERGENCY POWER SYSTEM OF THE ADJACENT HANGAR BUILDING AND IS SHOWN ON THIS PLAN FOR REFERENCE ONLY. REFER TO VOLUME 1 AND VOLUME 2 FOR GENERATOR REQUIREMENTS.

14 CONNECTION TO CONDENSING UNIT CU/1.5.

15 PROVIDE GFCI CIRCUIT BREAKER FOR ELECTRIC WATER COOLER CIRCUIT.

16 AUTOMATIC ROLL UP DOOR CONTROLLER PROVIDED WITH AUTOMATIC ROLL UP DOOR. MOUNT AT 48" AFF TO BOTTOM. PROVIDE 3/4" EMPTY CONDUIT WITH PULL STRING FROM CONTROLLER TO AUTOMATIC ROLL UP DOOR MOTOR CONTROL SECTION. TERMINATE CONDUIT AS DIRECTED BY THE AUTOMATIC ROLL UP DOOR PROVIDER.

17 MECHANICAL WIRE LUG ATTACHED TO METAL FENCE POST WITH SELF TAPPING SCREW. MOUNT AT 24" ABOVE FINISHED GRADE.

18 #6AWG STRANDED INSULATED COPPER GROUNDING CONDUCTOR. PROVIDE SLACK TO ALLOW GATE TO OPEN 180 DEGREES WITHOUT STRESSING THE COPPER CONDUCTOR.

19 #6AWG BARE SOLID COPPER GROUNDING CONDUCTOR. EXTEND TO LIGHTNING PROTECTION GROUND LOOP CONDUCTOR AND BOND WITH EXOTHERMIC WELD.

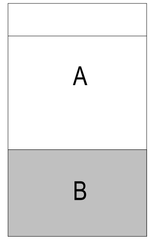

KEYPLAN

0 5' 10' 20' 30'

1/8" = 1'-0" GRAPHIC SCALE

NOTE:
IF THIS DRAWING IS LESS THAN 34" X 22"
IT IS A REDUCED SIZE DRAWING

STM	DESCRIPTION	DATE	APPR
1	MOD P00005	05/2023	
2	MOD P00006 AND MOD P00007	10/2025	

NAVFAC

NICHOLAS G. ZURRZYCKI
LICENSE
No 64299
STATE OF
FLORIDA
PROFESSIONAL ENGINEER

SEAL

BAMFORTH
ENGINEERS CONSULTANTS

A/E INFO

APPROVED

FOR COMMANDER NAVFAC 11/21/2022

ACTIVITY Approved by J. Scott Roberts, Asset Management Branch Head & Supervisory Facility Planner, PWD Beaufort, SC via email.

SATISFACTORY TO DATE	12/15/2022
DES RLW DRW RLW CHK KLM	
PM/DM	KTB / RLH
BRANCH MANAGER	JAS
CHIEF ENG/ARCH	EJA
FP ENGINEER	DSN

DEPARTMENT OF THE NAVY
NAVAL FACILITIES ENGINEERING SYSTEMS COMMAND
NAVAL FACILITIES ENGINEERING SYSTEMS COMMAND – MID-ATLANTIC
DC CORE: NORFOLK, VA
MCAS BEAUFORT
BEAUFORT, SC

P-475 AIRCRAFT MAINTENANCE HANGAR - VOLUME 3 (OSF OPTION)

OSF / SHOP ANNEX - POWER PLAN - GROUND FLOOR - SECTOR B

SCALE:	1/8" = 1'-0"
EPROJECT NO.:	1363603
CONSTR. CONTR. NO.	
NAVFAC DRAWING NO.	12860242
SHEET	1041 OF 1412

OEP101B

DRAWFORM REVISION: 25 AUGUST 2020

Autodesk Docs://2042 LMF-FY 502 T36 Maintenance Hangar/2042 F35 maint Hangar_OSF shop Annex EL-R/T2024.rvt
11/6/2025 4:02:39 PM

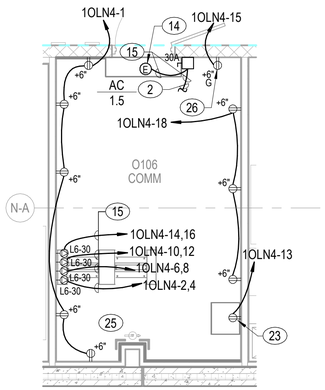

C1 ENLARGED PLAN - COMM O106

1/4" = 1'-0"

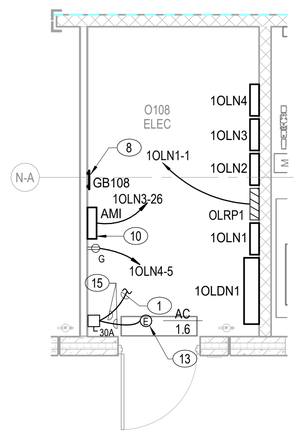

C2 ENLARGED PLAN - ELEC O108

1/4" = 1'-0"

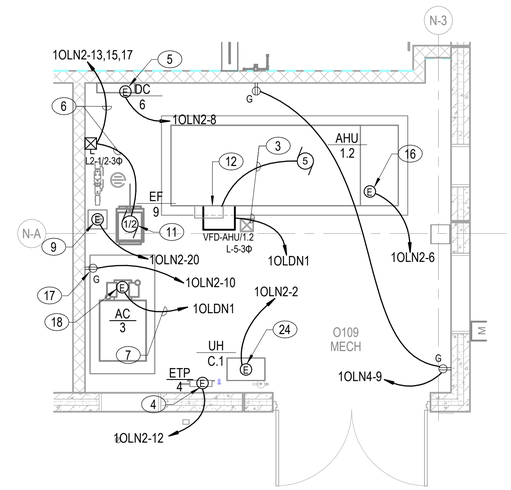

C3 ENLARGED MECHANICAL ROOM O109

1/4" = 1'-0"

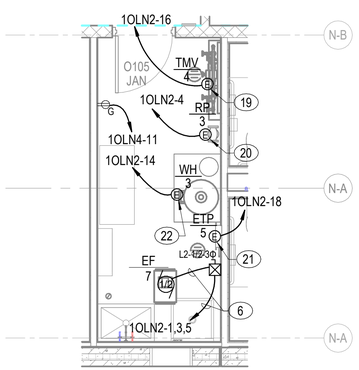

A1 ENLARGED PLAN - JAN O105

1/4" = 1'-0"

NOTES:

KEY NOTES (00)

1. TO CU-1.6 LOCATED AT THE BUILDING EXTERIOR. SEE SHEET OEP101B FOR CONTINUATION. CONTROL WIRING PROVIDED BY DIVISION 23.
2. TO CU-1.5 LOCATED AT THE BUILDING EXTERIOR. SEE SHEET OEP101B FOR CONTINUATION. CONTROL WIRING PROVIDED BY DIVISION 23.
3. SEE VARIABLE FREQUENCY DRIVE SCHEDULE ON SHEET OEP700 FOR CONDUIT AND WIRE SIZE.
4. CONNECTION TO ELECTRIC TRAP PRIMER. COORDINATE ROUGH-IN REQUIREMENTS WITH TRAP PRIMER INSTALLER. PROVIDE 120V, 20A TOGGLE SWITCH DISCONNECT ADJACENT TO TRAP PRIMER.
5. CONNECTION TO DIGITAL CONTROL PANEL. COORDINATE ROUGH-IN REQUIREMENTS WITH PANEL INSTALLER. PROVIDE 120V, 20A TOGGLE SWITCH DISCONNECT ADJACENT TO PANEL.
6. SEE MOTOR STARTER SCHEDULE ON SHEET OEP700 FOR CONDUIT AND WIRE SIZE.
7. SEE C1/OEP600 FOR CONDUIT AND WIRE SIZE.
8. MOUNT GROUND BUS AT 18" AFF TO TOP. REFER TO SHEET OEP601 FOR GROUNDING DETAIL.
9. CONNECTION TO WATER METER. COORDINATE ROUGH-IN REQUIREMENTS WITH PLUMBING CONTRACTOR.
10. SEE C3/OEP600 FOR AMI CONNECTION DIAGRAM.
11. CONNECTION TO EF-9.
12. VFD PROVIDED WITH PACKAGE AIR HANDLING UNIT.
13. CONNECTION TO AC-1.6
14. CONNECTION TO AC-1.5.
15. 1/2"C -(2)#10 + (1)#10 GND.
16. CONNECTION TO AHU 1.2 U.V. LIGHTS.
17. RECEPTACLE FOR AC-1 FILTER SECTION.
18. CONNECTION TO PACKAGE AIR COMPRESSOR VFD.
19. CONNECTION TO MIXING VALVE CONTROLLER. PROVIDE 20A, 120V, TOGGLE SWITCH DISCONNECT ADJACENT TO CONTROLLER.
20. CONNECTION TO RECIRCULATING PUMP. PROVIDE 20A, 120V, TOGGLE SWITCH DISCONNECT ADJACENT TO PUMP.
21. CONNECTION TO ELECTRONIC TRAP PRIMER. PROVIDE 20A, 120V, TOGGLE SWITCH DISCONNECT ADJACENT TO ETP-2.
22. CONNECTION TO WATER HEATER IGNITER. PROVIDE 20A, 120V, TOGGLE SWITCH DISCONNECT ADJACENT TO CONTROLLER.
23. RECEPTACLE FOR PUBLIC ADDRESS EQUIPMENT CABINET. COORDINATE EXACT MOUNTING REQUIREMENTS WITH PUBLIC ADDRESS SYSTEM CONTRACTOR.
24. CONNECTION TO UNIT HEATER UH-C.1. PROVIDE 120V, 1P TOGGLE SWITCH DISCONNECT ADJACENT TO UNIT HEATER.
25. MOUNT NEMA L6-30 RECEPTACLES AT 7'-0" AFF TO TOP.
26. MAINTENANCE RECEPTACLE FOR MECHANICAL AC SYSTEM.

PLAN NORTH

0 1' 5' 10' 15'

1/4" = 1'-0" GRAPHIC SCALE

NOTE:
IF THIS DRAWING IS LESS THAN 34" X 22"
IT IS A REDUCED SIZE DRAWING

SYM	DESCRIPTION	DATE	APPR
1	MOD P00005	05/2023	
2	MOD P00006 AND MOD P00007	10/2025	

NAVFAC

NICHOLAS G. ZUBRZYCKI LICENSE No 64299 STATE OF FLORIDA PROFESSIONAL ENGINEER

BAMFORTH ENGINEERS + SURVEYORS

AE INFO

APPROVED

FOR COMMANDER NAVFAC

ACTIVITY: Approved by J. Scott Roberts, Asset Management Branch Head & Supervisory Facility Planner, PWD Beaufort, SC via email.

SATISFACTORY TO DATE 12/15/2022

DES	RLW	DRW	RLW	CHK	KLM
PMDM	KTB / RLH				
BRANCH MANAGER	JAS				
CHIEF ENG/ARCH	EJA				
FP ENGINEER	DSN				

DEPARTMENT OF THE NAVY
NAVAL FACILITIES ENGINEERING SYSTEMS COMMAND
DC CODE:
NAVAL FACILITIES ENGINEERING SYSTEMS COMMAND ~ MID-ATLANTIC
NORFOLK, VA
MCAS BEAUFORT
BEAUFORT, SC

P-475 AIRCRAFT MAINTENANCE HANGAR - VOLUME 3 (OSF OPTION)

OSF /SHOP ANNEX - ENLARGED POWER PLANS

SCALE:	1/4" = 1'-0"
EPROJECT NO.:	1363603
CONSTR. CONTR. NO.	
NAVFAC DRAWING NO.	12860243
SHEET	1042 OF 1412

OEP401

DRAWFORM REVISION: 25 AUGUST 2020

Autodesk Docs://2042 LMFAT 502 F36 Maintenance Hangar/2042 F36 -repair Hangar_OSF Shop Annex EL-R/T2024.rvt
11/6/2025 4:02:48 PM

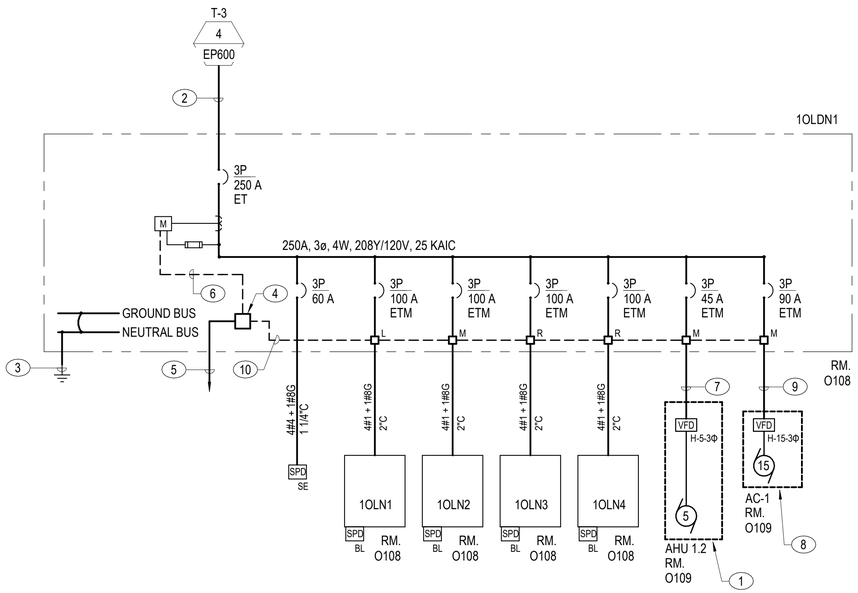

C1 OSF/SHOP ANNEX - SINGLE LINE DIAGRAM

NOT TO SCALE

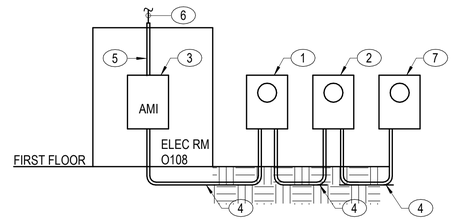

KEY NOTES: (C3/OEP600)

1. ADVANCED ELECTRIC METER MOUNTED TO SIDE OF SERVICE TRANSFORMER.
2. WALL MOUNTED WATER METER. REFER TO PLUMBING DRAWINGS FOR LOCATION AND MOUNTING HEIGHT.
3. ADVANCED METERING INFRASTRUCTURE EQUIPMENT CABINET. SEE C2/OEP401 FOR LOCATION AND MOUNTING HEIGHT.
4. 1/2" CONDUIT WITH NETWORKING WIRING AS REQUIRED. COORDINATE WITH PUBLIC WORKS AMI SYSTEM REPRESENTATIVE FOR WIRING REQUIREMENTS.
5. 1/2" CONDUIT. STUB CONDUIT TO NEAREST CABLE TRAY; SEE A1/TT501 IN VOLUME 2B FOR DETAIL.
6. 6-STRAND SINGLE MODE FIBER OPTIC CABLE TO FIBER OPTIC PATCH PANEL IN COMMUNICATIONS ROOM O106.
7. WALL MOUNTED GAS METER. REFER TO PLUMBING DRAWINGS FOR LOCATION AND MOUNTING HEIGHT.

C3 METERING CONNECTION DIAGRAM - OSF

NOT TO SCALE

NOTES:

KEY NOTES (00)

1. VFD PROVIDED WITH PACKAGED AIR HANDLING UNIT.
2. REFER TO SHEET ES100 IN VOLUME 1 FOR DUCT BANK AND FEEDER CONFIGURATION. REFER TO SHEET ES600 IN VOLUME 1 FOR FEEDER CONTINUATION.
3. SEE SHEET OEP601 FOR GROUNDING REQUIREMENTS.
4. ETHERNET GATEWAY LOCATED WITHIN ELECTRICAL PANELBOARD. THE GATEWAY SHALL BE UL LISTED FOR USE WITHIN THE ELECTRICAL PANELBOARD AND SUPPLIED WITH THE PANELBOARD.
5. NETWORK CONNECTION TO THE POWER MONITORING SYSTEM SERVER. SEE A3/OEP600 FOR CONNECTION DIAGRAM.
6. ASHRAE 90.1 ELECTRICAL ENERGY MODBUS COMMUNICATIONS WIRING FOR TRANSMISSION OF ELECTRICAL DATA FROM THE MULTI-FUNCTION DIGITAL METER TO THE POWER MONITORING SYSTEM SERVER.
7. SEE VARIABLE FREQUENCY DRIVE SCHEDULE ON SHEET OEP700 FOR CONDUIT AND WIRE SIZE.
8. VFD PROVIDED WITH PACKAGED AIR COMPRESSOR.
9. 1"C - (3)#4 + (1) #6 GND.
10. ASHRAE 90.1 ELECTRICAL ENERGY MONITORING MODBUS COMMUNICATIONS WIRING FOR TRANSMISSION OF ELECTRICAL METERING DATA FROM THE INDIVIDUAL CIRCUIT BREAKERS TO THE POWER MONITORING SYSTEM SERVER.

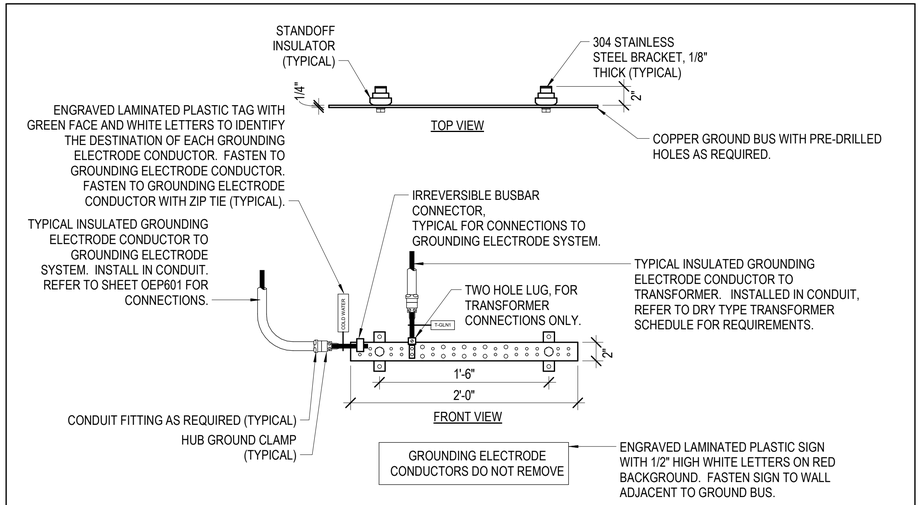

A1 TYPICAL ELECTRICAL ROOM GROUND BUS DETAIL

NOT TO SCALE

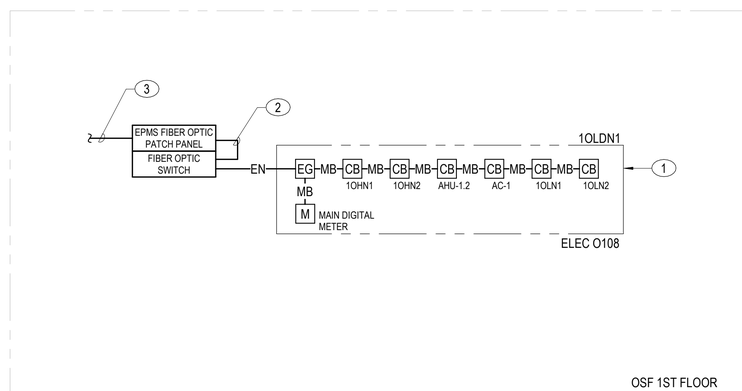

KEY NOTES: (A3/OEP600)

1. PANELBOARD CONTAINING ELECTRONIC TRIP CIRCUIT BREAKER WITH INTEGRAL POWER METERING.
2. FIBER OPTIC PATCH CORD.
3. 6 STRAND SM FIBER OPTIC CABLE IN TELECOMMUNICATIONS DUCTBANK TO HANGAR TELECOMMUNICATIONS ROOM 145. REFER TO SHEET TS105 IN VOLUME 1 FOR DUCTBANK ROUTING.

POWER METERING LEGEND

EG	ETHERNET GATEWAY PROVIDED WITH SWITCHBOARD OR PANELBOARD.
M	MULTI-FUNCTION DIGITAL METER PROVIDED WITH THE SWITCHBOARD.
CB	ELECTRONIC TRIP CIRCUIT BREAKER WITH INTEGRAL POWER METERING. SUBSCRIPT INDICATES LOAD SERVED.
–EN–	CATEGORY 6 RATED ETHERNET CABLE IN 3/4" CONDUIT.
–MB–	MODBUS SERIAL CABLE.

A3 OSF ELECTRIC POWER METERING RISER DIAGRAM

NOT TO SCALE

NOTE:
IF THIS DRAWING IS LESS THAN 34" X 22"
IT IS A REDUCED SIZE DRAWING

STM	DESCRIPTION	DATE	APPR
1	MOD P00005	05/2023	
2	MOD P00006 AND MOD P00007	10/2025	

NAVFAC

NICHOLAS G. ZUBRZYCKI
LICENSE No 64299
STATE OF FLORIDA
PROFESSIONAL ENGINEER

SEAL

BAMFORTH ENGINEERS + CONTRACTORS

AE INFO

APPROVED

FOR COMMANDER NAVFAC 11/21/2025

ACTIVITY: Approved by J. Scott Roberts, Asset Management Branch Head & Supervisory Facility Planner, PWD Beaufort, SC via email.

SATISFACTORY TO DATE 12/15/2022

DES RLW | DRW RLW | CHK KLM

PM/DM KTB / RLH

BRANCH MANAGER JAS

CHIEF ENG/ARCH EJA

FP ENGINEER DSN

DEPARTMENT OF THE NAVY
NAVAL FACILITIES ENGINEERING SYSTEMS COMMAND
DC CORE
NAVAL FACILITIES ENGINEERING SYSTEMS COMMAND – MID-ATLANTIC NORFOLK, VA
MCAS BEAUFORT
BEAUFORT, SC
P-475 AIRCRAFT MAINTENANCE HANGAR - VOLUME 3 (OSF OPTION)
SINGLE LINE DIAGRAM

SCALE: As indicated

EPROJECT NO.: 1363603

CONSTR. CONTR. NO.

NAVFAC DRAWING NO. 12860244

SHEET 1043 OF 1412

OEP600

DRAWFORM REVISION: 25 AUGUST 2020

Autodesk Docs://20242 VMFA1 503 F35 Maintenance Hangar/20242 F35 maint Hangar - OSF shop Annex EL.rvt/20024.rvt
11/6/2025 4:02:55 PM

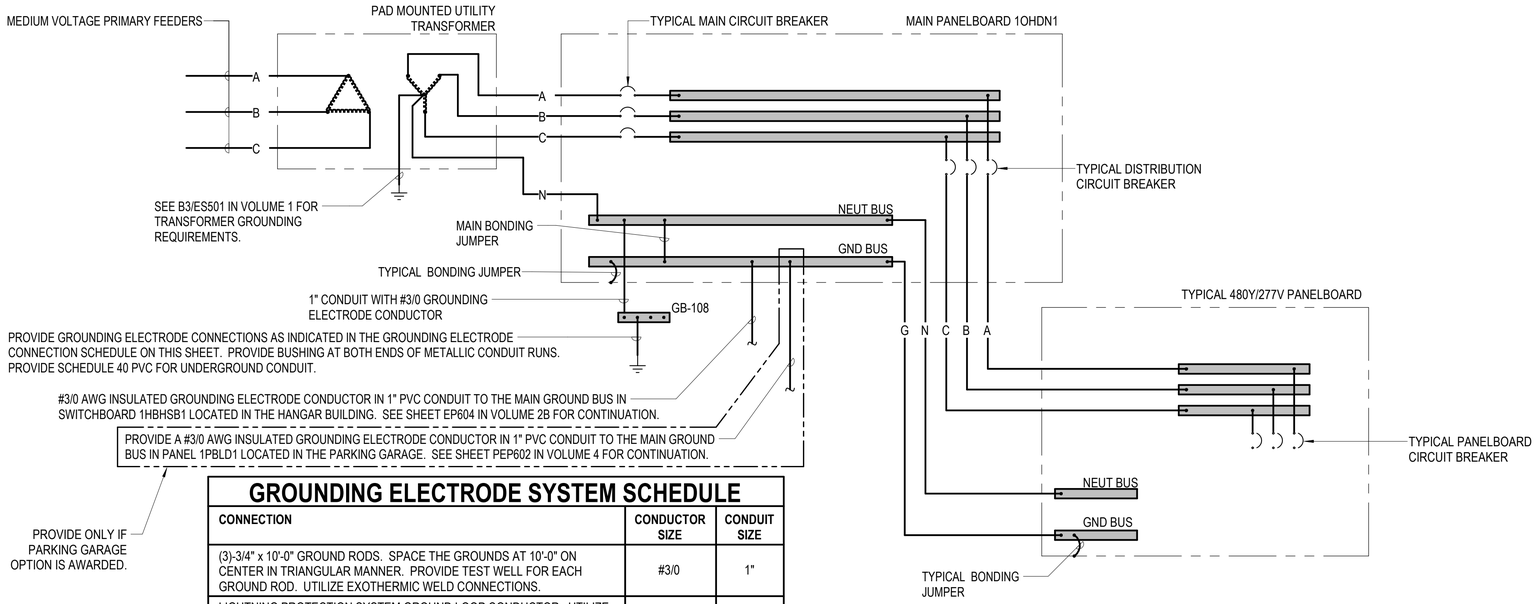

GROUNDING ELECTRODE SYSTEM SCHEDULE

CONNECTION	CONDUCTOR SIZE	CONDUIT SIZE
(3)-3/4" x 10'-0" GROUND RODS. SPACE THE GROUNDS AT 10'-0" ON CENTER IN TRIANGULAR MANNER. PROVIDE TEST WELL FOR EACH GROUND ROD. UTILIZE EXOTHERMIC WELD CONNECTIONS.	#3/0	1"
LIGHTNING PROTECTION SYSTEM GROUND LOOP CONDUCTOR. UTILIZE EXOTHERMIC WELD CONNECTIONS.	#3/0	1"
INTERIOR COLD WATER PIPE SYSTEM AT A POINT LOCATED NOT MORE THAN 5'-0" FROM THE POINT OF ENTRANCE INTO THE BUILDING.	#3/0	1"
WHERE PRESENT, BOND TO THE NEAREST STRUCTURAL STEEL COLUMN. UTILIZE AN EXOTHERMIC WELD CONNECTION AT INACCESSIBLE LOCATIONS.	#3/0	1"
BUILDING'S FOUNDATION REINFORCING BARS. UTILIZE EXOTHERMIC WELD CONNECTIONS. TYPICAL FOR THE REMOTE ELECTRICAL BUILDING AND MAIN BUILDING.	#3/0	1"

LEGEND

—A—	PHASE CONDUCTOR "A"	—G—	EQUIPMENT GROUND CONDUCTOR ROUTED IN CONDUIT WITH PHASE CONDUCTORS.
—B—	PHASE CONDUCTOR "B"	⏚	GROUNDING ELECTRODE
—C—	PHASE CONDUCTOR "C"		
—N—	NEUTRAL CONDUCTOR		
——•	POINT OF CONNECTION		

NOTE:
IF THIS DRAWING IS LESS THAN 34" X 22"
IT IS A REDUCED SIZE DRAWING

STM	DESCRIPTION	DATE	APPR
1	MOD P00005	05/2023	
2	MOD P00006 AND MOD P00007	10/2025	

NAVFAC

NICHOLAS G. ZUBRZYCKI LICENSE No 64299 STATE OF FLORIDA PROFESSIONAL ENGINEER

SEAL

BAMFORTH ENGINEERS & CONTRACTORS

A/E INFO

APPROVED

FOR COMMANDER NAVFAC 11/21/2025

ACTIVITY
Approved by J. Scott Roberts, Asset Management Branch Head & Supervisory Facility Planner, PWD Beaufort, SC via email.

SATISFACTORY TO DATE 12/15/2022

DES RLW	DRW RLW	CHK KLM	
PMDM	KTB / RLH		
BRANCH MANAGER	JAS		
CHIEF ENG/ARCH	EJA		
FP ENGINEER	DSN		

DEPARTMENT OF THE NAVY
NAVAL FACILITIES ENGINEERING SYSTEMS COMMAND
DC CORE:
MCAS BEAUFORT

NAVAL FACILITIES ENGINEERING SYSTEMS COMMAND ~ MID-ATLANTIC
NORFOLK, VA

BEAUFORT, SC

P-475 AIRCRAFT MAINTENANCE HANGAR - VOLUME 3 (OSF OPTION)

OVERALL GROUNDING DETAIL

SCALE: NTS
EPROJECT NO.: 1363603
CONSTR. CONTR. NO.
NAVFAC DRAWING NO. 12860245
SHEET 1044 OF 1412

OEP601

DRAWFORM REVISION: 25 AUGUST 2020

Autodesk Docs://20042 MF-A1 302 FB Maintenance Hangar/20042-F35 maint Hangar_OSF Bldg Annex BL-R1T2024.rvt
11/6/2025 4:02:39 PM

MOTOR STARTER SCHEDULE - 208V, 3Φ MOTORS						
			MOTOR CIRCUIT PROTECTOR			
DESIGNATION	HP	FLA	RATING	POLES	NEMA STARTER SIZE	BRANCH CIRCUIT SIZE
L2-1/2	1/2	2.4A	3A	3	0	1/2"C - 3#12 + 1#12 GND
L2-3/4	3/4	3.5A	7A	3	0	1/2"C - 3#12 + 1#12 GND
L2-1	1	4.6A	7A	3	0	1/2"C - 3#12 + 1#12 GND
L2-1 1/2	1 1/2	6.6A	15A	3	0	1/2"C - 3#12 + 1#12 GND
L2-2	2	7.5A	15A	3	0	1/2"C - 3#12 + 1#12 GND
L2-3	3	10.6A	15A	3	0	1/2"C - 3#12 + 1#12 GND
L2-5	5	16.7A	30A	3	1	3/4"C - 3#10 + 1#10 GND
L2-7 1/2	7 1/2	24.2A	50A	3	1	3/4"C - 3#8 + 1#8 GND
L2-10	10	30.8A	50A	3	2	3/4"C - 3#8 + 1#8 GND
L2-15	15	46.2A	100A	3	3	1"C - 3#4 + 1#6 GND
L2-20	20	59.4A	100A	3	3	1 1/4"C - 3#3 + 1#6 GND
L2-25	25	74.8A	150A	3	3	1 1/4"C - 3#2 + 1#6 GND
L2-30	30	88A	250A	3	4	1 1/2"C - 3#1/0 + 1#4 GND

VFD SCHEDULE - 208V, 3Φ MOTORS				
DESIGNATION	HP	FLA	BRANCH CIRCUIT SIZE	RPM
L-1/2	1/2	2.4A	1/2"C - 3#12 + 1#12 GND	1800
L-3/4	3/4	3.5A	1/2"C - 3#12 + 1#12 GND	1800
L-1	1	4.6A	1/2"C - 3#12 + 1#12 GND	1800
L-1 1/2	1 1/2	6.6A	1/2"C - 3#12 + 1#12 GND	1800
L-2	2	7.5A	1/2"C - 3#12 + 1#12 GND	1800
L-3	3	10.6A	1/2"C - 3#12 + 1#12 GND	1800
L-5	5	16.7A	3/4"C - 3#10 + 1#10 GND	1800
L-7 1/2	7 1/2	24.2A	3/4"C - 3#8 + 1#8 GND	1800
L-10	10	30.8A	3/4"C - 3#8 + 1#8 GND	1800
L-15	15	46.2A	1"C - 3#3 + 1#6 GND	1800
L-20	20	59.4A	1 1/4"C - 3#2 + 1#6 GND	1800
L-25	25	74.8A	1 1/2"C - 3#1/0 + 1#4 GND	1800
L-30	30	88A	1 1/2"C - 3#1/0 + 1#4 GND	1800

MINIMUM SHORT CIRCUIT RATING SHALL BE 65,000A

SURGE PROTECTIVE DEVICE SCHEDULE					
DESIGNATION	REPETITIVE SURGE CAPACITY	VOLTAGE RATING AND CONFIGURATION	PROTECTION MODULES	CATEGORY TYPE	SHORT CIRCUIT RATING
BH	100,000A	480Y/277V, 3Φ, 5W	L-L, L-N, L-G, N-G	BRANCH	100,000A
BL	100,000A	208Y/120V, 3Φ, 5W	L-L, L-N, L-G, N-G	BRANCH	100,000A
DH	200,000A	480Y/277V, 3Φ, 5W	L-L, L-N, L-G, N-G	DISTRIBUTION	100,000A
DL	200,000A	208Y/120V, 3Φ, 5W	L-L, L-N, L-G, N-G	DISTRIBUTION	100,000A
SE	200,000A	480Y/277V, 3Φ, 5W	L-L, L-N, L-G, N-G	SERVICE ENTRANCE	100,000A

SURGE PROTECTIVE DEVICE SCHEDULE NOTES:

A. NIPPLE MOUNT BRANCH SURGE PROTECTIVE DEVICES TO BOTTOM OF PANELBOARD. DEVICE SHALL BE PROVIDED WITH #10 AWG FACTORY LEADS.
B. MOUNT SERVICE ENTRANCE SURGE PROTECTIVE DEVICES TO SIDE OF MAIN PANELBOARD.

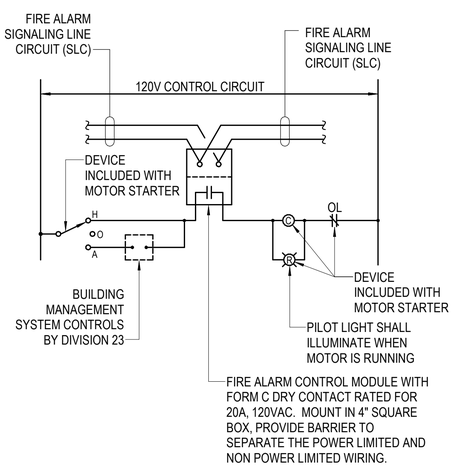

A1 MOTOR CONTROL DIAGRAM - SINGLE SPEED MOTORS
NOT TO SCALE

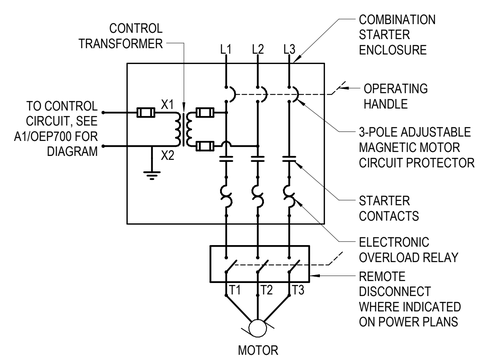

A2 STARTER DIAGRAM - THREE PHASE MOTORS
NOT TO SCALE

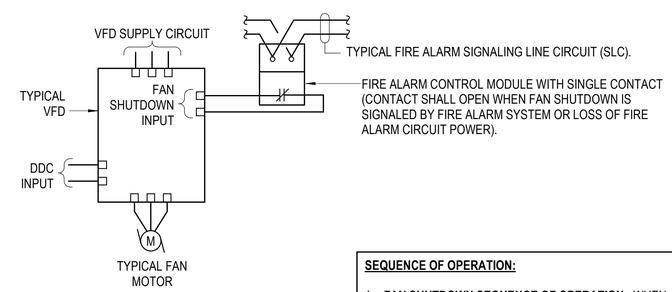

SEQUENCE OF OPERATION:

1. **FAN SHUTDOWN SEQUENCE OF OPERATION:** WHEN FIRE ALARM SYSTEM INITIATES FAN SHUTDOWN, THE CONTROL MODULE AT THE VFD WILL SIGNAL THE VFD TO SHUTDOWN THE FAN. CONTROL MODULE AT DDC PANEL WILL SIGNAL THE DDC SYSTEM THAT THE FAN HAS SHUTDOWN ON FIRE ALARM.

A4 VFD FAN SHUT DOWN AND DAMPER POWER CONTROL CONNECTION DIAGRAM
NOT TO SCALE

NOTE:
IF THIS DRAWING IS LESS THAN 34" X 22"
IT IS A REDUCED SIZE DRAWING

STM	DESCRIPTION	DATE	APPR
1	MOD P00005	05/2023	
2	MOD P00006 AND MOD P00007	10/2025	

NAVFAC

NICHOLAS G. ZUBRZYCKI
LICENSE
No 64299
STATE OF FLORIDA
PROFESSIONAL ENGINEER
SEAL

BAMFORTH
ENGINEERS & CONTRACTORS
A/E INFO

APPROVED
FOR COMMANDER NAVFAC 11/21/2022
ACTIVITY
Approved by J. Scott Roberts,
Asset Management Branch Head &
Supervisory Facility Planner, PWD
Beaufort, SC via email.
SATISFACTORY TO DATE 12/15/2022

DES RLW	DRW RLW	CHK KLM	
PM/DM	KTB / RLH		
BRANCH MANAGER	JAS		
CHIEF ENG/ARCH	EJA		
FP ENGINEER	DSN		

DEPARTMENT OF THE NAVY
NAVAL FACILITIES ENGINEERING SYSTEMS COMMAND
NAVAL FACILITIES ENGINEERING SYSTEMS COMMAND ~ MID-ATLANTIC
NORFOLK, VA
DC CORE:
MCAS BEAUFORT
BEAUFORT, SC
P-475 AIRCRAFT MAINTENANCE HANGAR - VOLUME 3 (OSF OPTION)
ELECTRICAL SCHEDULES AND DETAILS

SCALE: 12" = 1'-0"
EPROJECT NO.: 1363603
CONSTR. CONTR. NO.
NAVFAC DRAWING NO.
12860246
SHEET 1045 OF 1412
OEP700
DRAWFORM REVISION: 25 AUGUST 2020

Autodesk Docs://20042 NAF A1 302 FS Maintenance Hangar/20042 F35 maint Hangar_OSF Hrdg Annex BL/R/T2024.rvt
11/9/2023 4:03:06 PM

PANEL: 1OLN1

LOCATION: ELEC O108 | **VOLTS:** 208Y/120V | **A.I.C. RATING:** 10,000A
FED FROM: 1OLDN1 | **PHASES:** 3 | **MAINS TYPE:** MLO
MOUNTING: SURFACE | **WIRE:** 4 | **BUS RATING:** 100 A
ENCLOSURE: NEMA 1 | **MCB RATING:** N/A

NOTES:

CKT	CIRCUIT DESCRIPTION	TRIP (AMPS)	POLES	PHASE A (VA)		PHASE B (VA)		PHASE C (VA)		POLES	TRIP (AMPS)	CIRCUIT DESCRIPTION	CKT
1	LIGHTING RELAY PANEL "OLRP1" - RM. O108	20	1	600	686					1	20	LTG - RM. O107, O104, O103	2
3	LTG - RM. O111	20	1			868	1015			1	20	LTG - EXTERIOR	4
5	LTG - RM. O111	20	1					1300	929	1	20	LTG - EXTERIOR	6
7	LTG - RM. O111	20	1	1300	180					1	20	LTG - SITE LIGHTING	8
9	LTG - RM. O102	20	1			1142	0			1	20	SPARE	10
11	LTG - RM. O102	20	1					870	0	1	20	SPARE	12
13	SPACE ONLY	--	1	--	0					1	20	SPARE	14
15	SPACE ONLY	--	1			--	0			1	20	SPARE	16
17	SPACE ONLY	--	1					--	--	1	--	SPACE ONLY	18
19	SPACE ONLY	--	1	--	--					1	--	SPACE ONLY	20
21	SPACE ONLY	--	1			--	--			1	--	SPACE ONLY	22
23	SPACE ONLY	--	1					--	--	1	--	SPACE ONLY	24
25	SPD	30	3	0	--					1	--	SPACE ONLY	26
27	--	--	--			0	--			1	--	SPACE ONLY	28
29	--	--	--					0	--	1	--	SPACE ONLY	30
	TOTAL AMPS A-N:	23		2730		3025		3099		**KVA**	**AMPS**		
	TOTAL AMPS B-N:	26						**TOTAL CONNECTED:**		8.85	25		
	TOTAL AMPS C-N:	26						**TOTAL DEMAND:**		8.74	24		

NOTES:

PANEL: 1OLN2

LOCATION: ELEC O108 | **VOLTS:** 208Y/120V | **A.I.C. RATING:** 10,000A
FED FROM: 1OLDN1 | **PHASES:** 3 | **MAINS TYPE:** MLO
MOUNTING: SURFACE | **WIRE:** 4 | **BUS RATING:** 225 A
ENCLOSURE: NEMA 1 | **MCB RATING:** N/A

NOTES:

CKT	CIRCUIT DESCRIPTION	TRIP (AMPS)	POLES	PHASE A (VA)		PHASE B (VA)		PHASE C (VA)		POLES	TRIP (AMPS)	CIRCUIT DESCRIPTION	CKT
1	EF-7 - RM. O105	15	3	288	864					1	15	UH-C.1 - RM. O109	2
3	--	--	--			288	528			1	15	RP-1 - RM. O105	4
5	--	--	--					288	1000	1	20	AHU 1.2 UV LIGHT - RM. O109	6
7	EF-8 - RM. O105	15	3	901	500					1	20	DIGITAL CONTROL PANEL DC-6 - RM. O109	8
9	--	--	--			901	180			1	20	AC-1 FILTER SECTION - RM. O109	10
11	--	--	--					901	500	1	20	ETP-1 - RM. O109	12
13	EF-9 - RM. O109	15	3	288	500					1	20	GWH-1 - RM. O105	14
15	--	--	--			288	500			1	20	TMV-1 - RM. O105	16
17	--	--	--					288	500	1	20	ETP-2 - RM. O105	18
19	ROLLUP DOOR - RM. O111	15	3	443	500					1	20	WATER METER - RM. O109	20
21	--	--	--			443	1015			2	25	CU-1.6	22
23	--	--	--					443	1015	--	--	--	24
25	ROLLUP DOOR - RM. O111	15	3	443	0					1	20	SPARE	26
27	--	--	--			443	0			1	20	SPARE	28
29	--	--	--					443	0	1	20	SPARE	30
31	ROLLUP DOOR - RM. O102	15	3	443	0					1	20	SPARE	32
33	--	--	--			443	0			1	20	SPARE	34
35	--	--	--					443	0	1	20	SPARE	36
37	SPD	30	3	0	0					1	20	SPARE	38
39	--	--	--			0	0			1	20	SPARE	40
41	--	--	--					0	0	1	20	SPARE	42
	TOTAL AMPS A-N:	43		5155		4988		5594		**KVA**	**AMPS**		
	TOTAL AMPS B-N:	42						**TOTAL CONNECTED:**		15.71	44		
	TOTAL AMPS C-N:	47						**TOTAL DEMAND:**		14.35	40		

NOTES:

PANEL: 1OLN3

LOCATION: ELEC O108 | **VOLTS:** 208Y/120V | **A.I.C. RATING:** 10,000A
FED FROM: 1OLDN1 | **PHASES:** 3 | **MAINS TYPE:** MLO
MOUNTING: SURFACE | **WIRE:** 4 | **BUS RATING:** 225 A
ENCLOSURE: NEMA 1 | **MCB RATING:** N/A

NOTES:

CKT	CIRCUIT DESCRIPTION	TRIP (AMPS)	POLES	PHASE A (VA)		PHASE B (VA)		PHASE C (VA)		POLES	TRIP (AMPS)	CIRCUIT DESCRIPTION	CKT
1	REC - RM. O107	20	1	540	540					1	20	REC - RM. O107	2
3	REC - RM. O107	20	1			540	720			1	20	REC - RM. O102	4
5	REC - RM. O102	20	1					720	540	1	20	REC - RM. O102	6
7	REC - RM. O102	20	1	720	540					1	20	REC - RM. O102	8
9	REC - RM. O102	20	1			720	540			1	20	REC - RM. O102	10
11	REC - RM. O102	20	1					360	360	1	20	REC - RM. O102	12
13	REC - RM. O111	20	1	900	360					1	20	POWER CORD - RM. O102	14
15	REC - RM. O111	20	1			900	360			1	20	POWER CORD - RM. O102	16
17	REC - RM. O111	20	1					900	360	1	20	POWER CORD - RM. O102	18
19	REC - EXTERIOR	20	1	720	576					1	20	RGH-A.10 - RM. O111	20
21	REC - EXTERIOR	20	1			360	576			1	20	RGH-A.11 - RM. O111	22
23	SPACE ONLY	--	1					--	180	1	20	EWC - RM. O101 (PROVIDE GFCI CIRCUIT BREAKER)	24
25	SPACE ONLY	--	1	--	0					1	20	AMI - RM. O108	26
27	SPACE ONLY	--	1			--	0			1	20	SPARE	28
29	SPACE ONLY	--	1					--	0	1	20	SPARE	30
31	SPACE ONLY	--	1	--	0					1	20	SPARE	32
33	SPACE ONLY	--	1			--	0			1	20	SPARE	34
35	SPACE ONLY	--	1					--	--	1	--	SPACE ONLY	36
37	SPD	30	3	0	--					1	--	SPACE ONLY	38
39	--	--	--			0	--			1	--	SPACE ONLY	40
41	--	--	--					0	--	1	--	SPACE ONLY	42
	TOTAL AMPS A-N:	42		4896		4716		3420		**KVA**	**AMPS**		
	TOTAL AMPS B-N:	41						**TOTAL CONNECTED:**		13.03	36		
	TOTAL AMPS C-N:	29						**TOTAL DEMAND:**		12.29	34		

NOTES:

PANEL: 1OLN4

LOCATION: ELEC O108 | **VOLTS:** 208Y/120V | **A.I.C. RATING:** 10,000A
FED FROM: 1OLDN1 | **PHASES:** 3 | **MAINS TYPE:** MLO
MOUNTING: SURFACE | **WIRE:** 4 | **BUS RATING:** 225 A
ENCLOSURE: NEMA 1 | **MCB RATING:** N/A

NOTES:

CKT	CIRCUIT DESCRIPTION	TRIP (AMPS)	POLES	PHASE A (VA)		PHASE B (VA)		PHASE C (VA)		POLES	TRIP (AMPS)	CIRCUIT DESCRIPTION	CKT
1	REC - RM. O106	20	1	900	500					2	30	REC - RM. O106	2
3	ETP FP - RM. O110	20	1			1104	500			--	--	--	4
5	REC - RM. O108	20	1					180	500	2	30	REC - RM. O106	6
7	EYE WASH STATION - RM. O102	20	1	70	500					--	--	--	8
9	REC - RM. O109	20	1			180	500			2	30	REC - RM. O106	10
11	REC - RM. O109	20	1					180	500	2	30	REC - RM. O106	12
13	REC - RM. O105	20	1							--	--	--	14
15	PAEC EQUIPMENT CABINET - RM. O106	20	1	180	500					2	30	REC - RM. O106	16
17	REC COMM O106	20	1			180	500			--	--	--	18
19	CU-1.5	30	2					1123	540	1	20	REC - RM. O106	20
21	--	--	--	1123	516					1	20	NITROGEN GENERATOR - RM. O110	22
23	SPARE	20	1			0	500			1	20	MASS NOTIFICATION TRANSCEIVER - RM. O101	24
25	SPARE	20	1					0	500	1	20	FIRE ALARM/MASS NOTIFICATION CONTROL PANEL - RM. O101	26
27	SPARE	20	1	0	500					1	20	FIRE ALARM RADIO TRANSMITTER - RM. O101	28
29	SPARE	20	1			0	--			1	--	SPACE ONLY	30
31	SPARE	20	1	0	--					1	--	SPACE ONLY	32
33	SPARE	20	1			0	--			1	--	SPACE ONLY	34
35	SPARE	20	1					0	--	1	--	SPACE ONLY	36
37	SPD	30	3	0	--					1	--	SPACE ONLY	38
39	--	--	--			0	--			1	--	SPACE ONLY	40
41	--	--	--					0	--	1	--	SPACE ONLY	42
	TOTAL AMPS A-N:	38		4601		3377		3369		**KVA**	**AMPS**		
	TOTAL AMPS B-N:	28						**TOTAL CONNECTED:**		11.34	31		
	TOTAL AMPS C-N:	28						**TOTAL DEMAND:**		11.14	31		

NOTES:

NOTE:
IF THIS DRAWING IS LESS THAN 34" X 22"
IT IS A REDUCED SIZE DRAWING

1OHN1	1OHN2
1OLN1	1OLN2

SYM	DESCRIPTION	DATE	APPR
1	MOD P00005	05/2023	
2	MOD P00006 AND MOD P00007	10/2025	

NAVFAC

NICHOLAS G. ZUBRZYCKI LICENSE No 64299 STATE OF FLORIDA PROFESSIONAL ENGINEER

SEAL

BAMFORTH ENGINEERS CONTRACTORS

AE INFO

APPROVED

FOR COMMANDER NAVFAC 11/21/2025

ACTIVITY: Approved by J. Scott Roberts Asset Management Branch Head & Supervisory Facility Planner, PWD Beaufort, SC via email.

SATISFACTORY TO DATE 12/15/2022

DES	RLW	DRW	RLW	CHK	KLM
PMDM	KTB / RLH				
BRANCH MANAGER	JAS				
CHIEF ENG/ARCH	EJA				
FP ENGINEER	DSN				

DEPARTMENT OF THE NAVY
NAVAL FACILITIES ENGINEERING SYSTEMS COMMAND
DC CODE:
NAVAL FACILITIES ENGINEERING SYSTEMS COMMAND ~ MID-ATLANTIC
NORFOLK, VA
MCAS BEAUFORT
BEAUFORT, SC

P-475 AIRCRAFT MAINTENANCE HANGAR - VOLUME 3 (OSF OPTION)

PANEL SCHEDULES

SCALE:
EPROJECT NO.: 1363603
CONSTR. CONTR. NO.
NAVFAC DRAWING NO. 12860247
SHEET 1046 OF 1412

OEP800

DRAWFORM REVISION: 25 AUGUST 2020

Autodesk Docs://2024 VAFA1 522 F36 Maintenance Hangar/2024.F36 -ward Hangar_OSF Hrsp Annex EL-R/F36204.rvt
11/6/2025 4:03:11 PM

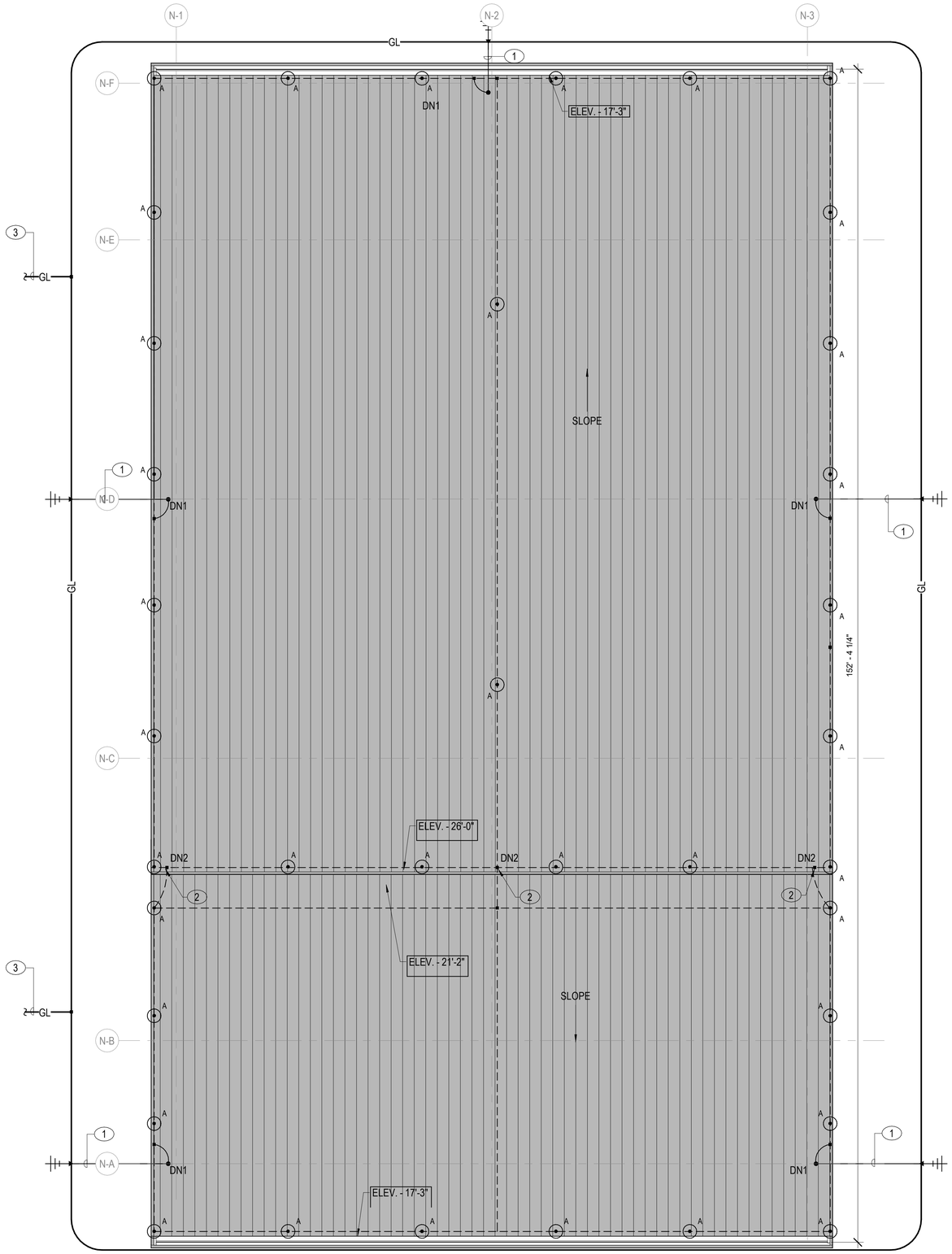

NOTES:

SHEET NOTES:

A. ROOF PITCH IS LESS THAN 1/8. CLASSIFIED AS FLAT OR GENTLY SLOPING PER NFPA 780.
B. FURNISH AND INSTALL LIGHTNING PROTECTION SYSTEM IN ACCORDANCE WITH NFPA 780 STANDARDS, AND UL96A.
C. ALL CONDUCTORS WILL BE FASTENED AT A MAXIMUM SPACING OF NOT MORE THAN 3 FEET.
D. AIR TERMINALS WILL BE PLACED AT OR WITHIN 2 FEET OF THE ENDS OF EDGES AN CORNER OF ROOF. AIR TERMINALS WILL BE SPACED AT 20 FEET MAXIMUM BETWEEN AIR TERMINALS.
E. PROVIDE UL MASTER LABEL FOR THE LIGHTNING PROTECTION SYSTEM UPON COMPLETE INSTALLATION OF THE LIGHTNING PROTECTION SYSTEM.
F. SEE SHEET OEQ501 AND OEQ502 FOR LIGHTNING PROTECTION DETAILS.

KEY NOTES (00)

1 1" SCHEDULE 40 PVC CONDUIT WITH DOWN CONDUCTOR SECURED TO STEEL COLUMN. PROVIDE BONDING CONNECTION TO STRUCTURAL STEEL AT THE ROOF LEVEL.
2 ROUTE DOWN CONDUCTOR EXPOSED ON EXTERIOR WALL DOWN TO LOWER ROOF.
3 EXTEND OSF BUILDING GROUND LOOP CONDUCTOR TO THE HANGAR BUILDING GROUND LOOP CONDUCTOR. SEE SHEET EQ132 IN VOLUME 2B FOR CONTINUATION.

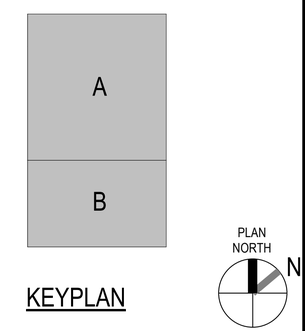

KEYPLAN

0 5' 10' 20' 30'
1/8" = 1'-0" GRAPHIC SCALE

NOTE:
IF THIS DRAWING IS LESS THAN 34" X 22"
IT IS A REDUCED SIZE DRAWING

STM	DESCRIPTION	DATE	APPR
1	MOD P00005	05/2023	
2	MOD P00006 AND MOD P00007	10/2025	

NAVFAC

NICHOLAS G. ZUBRZYCKI
LICENSE No 64299
STATE OF FLORIDA
PROFESSIONAL ENGINEER
SEAL

BAMFORTH ENGINEERS + CONTRACTORS
AE INFO

APPROVED
FOR COMMANDER NAVFAC 11/21/2025

ACTIVITY: Approved by J. Scott Roberts, Asset Management Branch Head & Supervisory Facility Planner, PWD Beaufort, SC via email.

SATISFACTORY TO DATE 12/15/2022

DES	RLW	DRW	RLW	CHK	KLM
PM/DM	KTB / RLH				
BRANCH MANAGER	JAS				
CHIEF ENG/ARCH	EJA				
FP ENGINEER	DSN				

DEPARTMENT OF THE NAVY
NAVAL FACILITIES ENGINEERING SYSTEMS COMMAND
DC CORE
NAVAL FACILITIES ENGINEERING SYSTEMS COMMAND - MID-ATLANTIC
NORFOLK, VA
MCAS BEAUFORT
BEAUFORT, SC

P-475 AIRCRAFT MAINTENANCE HANGAR - VOLUME 3 (OSF OPTION)

OSF / SHOP ANNEX - LIGHTNING PROTECTION PLAN

SCALE: 1/8" = 1'-0"
EPROJECT NO.: 1363603
CONSTR. CONTR. NO.
NAVFAC DRAWING NO. 12860248
SHEET 1047 OF 1412

OEQ111

DRAWFORM REVISION: 25 AUGUST 2020

Autodesk Docs://32042 VMFA 533 F35 Maintenance Hangar/32042 F35 Maintenance Hangar_OSF Shop Annex EL.rvt/32024 v4
11/6/2025 4:03:18 PM

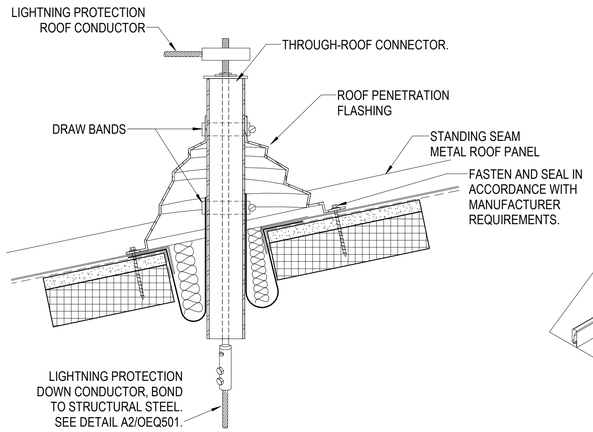

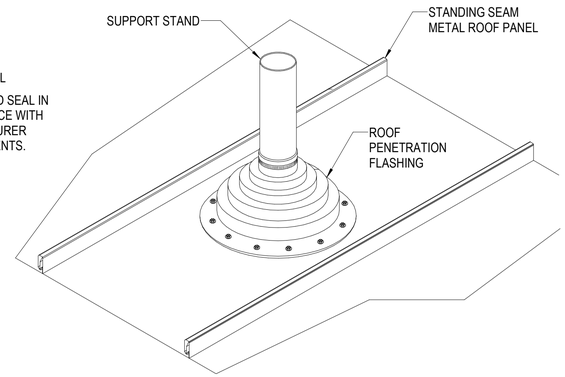

C1 STANDING SEAM THRU-ROOF CONNECTOR DETAIL- DN1

NTS

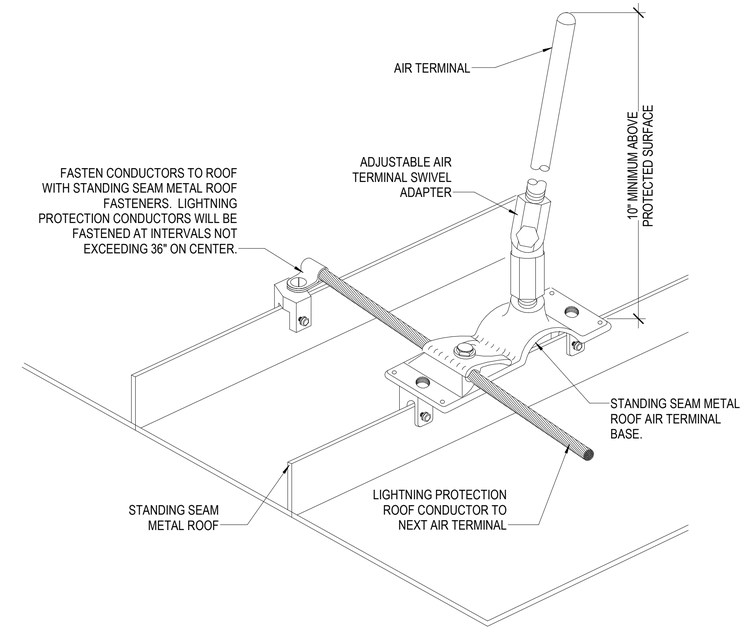

C4 AIR TERMINAL TYPE "A" (STANDING SEAM METAL ROOF)

NTS

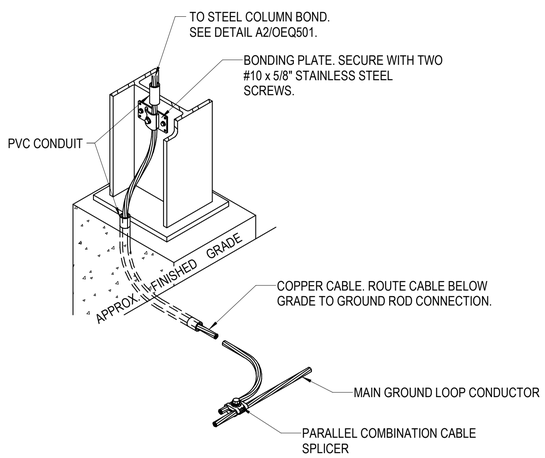

A1 STEEL COLUMN GROUNDING CONNECTION

NTS

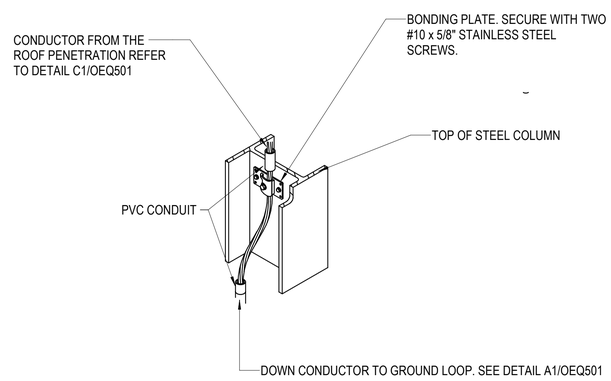

A2 SECURED TO STEEL COLUMN

NTS

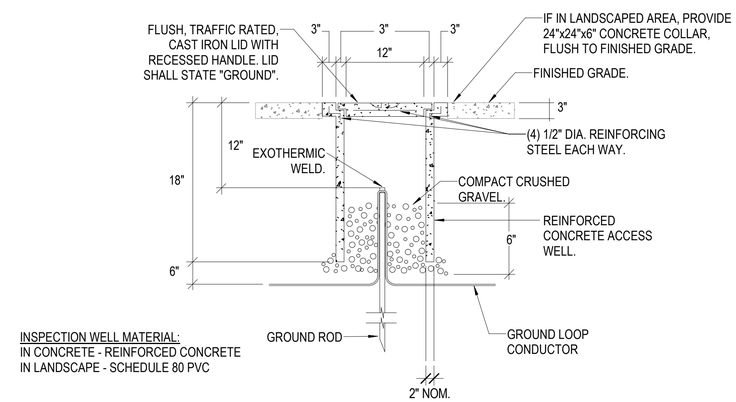

A4 GROUND ROD INSPECTION WELL

NTS

NOTE:
IF THIS DRAWING IS LESS THAN 34" X 22"
IT IS A REDUCED SIZE DRAWING

1	MOD P00005	05/2023			
2	MOD P00006 AND MOD P00007	10/2025			

STM DESCRIPTION DATE APPR

NAVFAC

NICHOLAS G. ZUBRZYCKI LICENSE No 64299 STATE OF FLORIDA PROFESSIONAL ENGINEER

SEAL

BAMFORTH ENGINEERS & CONTRACTORS

AE INFO

APPROVED

FOR COMMANDER NAVFAC 11/21/2025

ACTIVITY
Approved by J. Scott Roberts
Asset Management Branch Head &
Supervisory Facility Planner, PWD
Beaufort, SC via email.

SATISFACTORY TO DATE 12/15/2022

DES	RLW	DRW	RLW	CHK	KLM
PM/DM					KTB / RLH
BRANCH MANAGER					JAS
CHIEF ENG/ARCH					EJA
FP ENGINEER					DSN

DEPARTMENT OF THE NAVY
NAVAL FACILITIES ENGINEERING SYSTEMS COMMAND
DC CORE
MCAS BEAUFORT

NAVAL FACILITIES ENGINEERING SYSTEMS COMMAND – MID-ATLANTIC
NORFOLK, VA

BEAUFORT, SC

P-475 AIRCRAFT MAINTENANCE HANGAR - VOLUME 3 (OSF OPTION)

LIGHTNING PROTECTION DETAILS

SCALE: As indicated
EPROJECT NO.: 1363603
CONSTR. CONTR. NO.
NAVFAC DRAWING NO. 12860249
SHEET 1048 OF 1412

OEQ501

DRAWFORM REVISION: 28 AUGUST 2020

Autodesk Docs://20243_NAFA1 502 F35 Maintenance Hangar/20243 F35 maint Hangar_OSF shop Annex EL.6V/T20241-r4
11/5/2025 4:03:23 PM

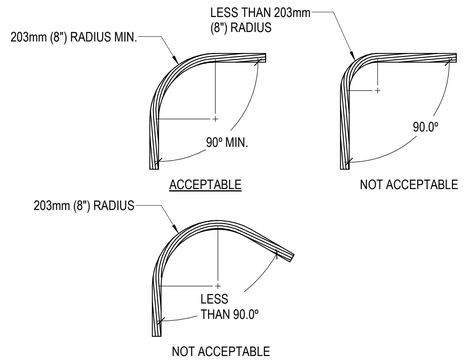

C2 TYPICAL CABLE BEND REQUIREMENTS
NOT TO SCALE

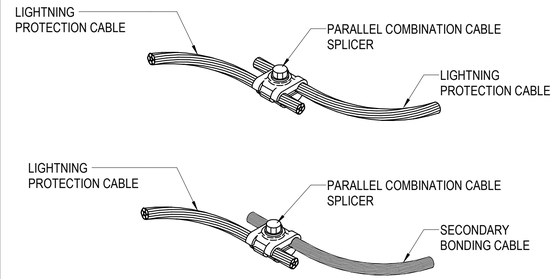

C3 TYPICAL CABLE SPLICERS
NOT TO SCALE

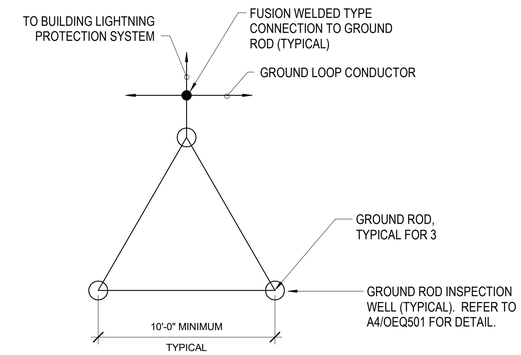

C4 GROUND ROD COUNTERPOISE CONFIGURATION
NOT TO SCALE

NOTE:
IF THIS DRAWING IS LESS THAN 34" X 22"
IT IS A REDUCED SIZE DRAWING

STM	DESCRIPTION	DATE	APPR
1	MOD P00005	05/2023	
2	MOD P00006 AND MOD P00007	10/2025	

NAVFAC

NICHOLAS G. ZUBRZYCKI
LICENSE
No 64299
STATE OF
FLORIDA
PROFESSIONAL ENGINEER
SEAL

BAMFORTH
ENGINEERS — CONTRACTORS
A/E INFO

APPROVED
FOR COMMANDER NAVFAC 11/21/2025

ACTIVITY
Approved by J. Scott Roberts,
Asset Management Branch Head &
Supervisory Facility Planner, PWD
Beaufort, SC via email.

SATISFACTORY TO DATE	12/15/2022
DES RLW / DRW RLW / CHK KLM	
PMDM	KTB / RLH
BRANCH MANAGER	JAS
CHIEF ENG/ARCH	EJA
FP ENGINEER	DSN

DEPARTMENT OF THE NAVY
NAVAL FACILITIES ENGINEERING SYSTEMS COMMAND
DC CORE:
MCAS BEAUFORT

NAVAL FACILITIES ENGINEERING SYSTEMS COMMAND ~ MID-ATLANTIC
NORFOLK, VA

BEAUFORT, SC

P-475 AIRCRAFT MAINTENANCE HANGAR - VOLUME 3 (OSF OPTION)

LIGHTNING PROTECTION DETAILS

SCALE:	NTS
EPROJECT NO.:	1363603
CONSTR. CONTR. NO.	
NAVFAC DRAWING NO.	12860250
SHEET	1049 OF 1412

OEQ502

DRAWFORM REVISION: 25 AUGUST 2020

Autodesk Docs://2042 NAFAI 302 FS Maintenance Hangar/2042-F75 maint Hangar_OSF Hog Annex BL/R/T2024.rvt
11/9/2024 4:03:28 PM