PLUMBING GENERAL NOTES:

1. REFER TO SPECIFICATIONS FOR ALL PIPING CONSTRUCTION AND INSTALLATION REQUIREMENTS.
2. REFER TO TYPICAL DETAIL SHEETS FOR ADDITIONAL VALVING, ACCESSORIES, EQUIPMENT CONNECTIONS, AND ASSEMBLY DETAILS.
3. PIPING LOCATIONS SHOWN ARE SCHEMATIC. REFER TO SPECIFICATIONS FOR SHOP DRAWING AND COORDINATION DRAWING REQUIREMENTS. DO NOT PROCEED WITH INSTALLATION OF PIPING UNTIL APPROVED SHOP DRAWINGS ARE AVAILABLE AT THE SITE.
4. PROVIDE ACCESS PANELS IN NON-ACCESSIBLE GENERAL CONSTRUCTION SUBSTRATES FOR MAINTENANCE AND ADJUSTMENT OF ALL CONCEALED VALVES, FLOW CONTROL DEVICES AND EQUIPMENT. REFER TO SPECIFICATIONS. WOOD, GYPSUM DRYWALL AND CONCEALED SPLINE TILE CEILINGS ARE CONSIDERED NON-ACCESSIBLE.
5. PROVIDE FIRE RATED SLEEVES FOR PIPING PENETRATIONS THROUGH RATED ASSEMBLIES. COORDINATE WITH LIFE SAFETY PLANS. REFER TO TYPICAL PIPE SLEEVE DETAILS.
6. REFER TO DRAWING SECTION ILLUSTRATIONS ON MECHANICAL SHEETS FOR ADDITIONAL PLUMBING PIPING AND EQUIPMENT.
7. PROVIDE PIPE DRAINS AT LOW POINTS AND BALL VALVE AIR VENTS AT HIGH POINTS OF DOMESTIC WATER SYSTEM.
8. PLUMBING PIPING MUST NOT PASS THROUGH ELECTRIC ROOMS, COMMUNICATION ROOMS, SERVER ROOMS, OR ELEVATOR EQUIPMENT ROOMS. ONLY PIPING SERVING EQUIPMENT LOCATED IN AFOREMENTIONED ROOMS MUST BE PERMITTED.
9. DO NOT ROUTE PIPING OVER ELECITRCAL PANELS, SWITCHBOARDS, SWITCHGEAR, TRANSFORMERS, OR SIMILAR ELECTRICAL EQUIPMENT.
10. PROVIDE WATER HAMMER ARRESTORS PDI SIZE "B" ON INDIVIDUAL COLD WATER LINES SERVING WATER CLOSETS. LOCATE ARRESTOR ABOVE CEILING FOR ACCESS. ARRESTORS MUST BE PROVIDED AT OTHER PLUMBING FIXTURES, LOCATED AND SIZED IN ACCORDANCE WITH PLUMBING DRAINAGE INSTITUTE (PDI) STANDARD WH-201 AND ASSE 1010. SIZES INDICATED ARE THE MINIMUM SIZE PERMITTED. ACCESS PANELS MUST BE PROVIDED FOR ALL ARRESTORS LOCATED ABOVE NON-ACCESSIBLE CEILINGS AND WITHIN WALLS.
11. PROVIDE CLEANOUTS PER IPC, INCLUDING AT BASE OF DRAINAGE STACKS.
12. REFER TO ARCHITECTURAL INTERIOR ELEVATIONS AND FLOOR PLANS FOR LOCATION DIMENSIONS FOR PLACEMENT OF ALL PLUMBING DEVICES, FIXTURES AND FLOOR DRAINS/SINKS. ARCHITECTURAL DEFINED LOCATION DIMENSIONS TAKE PRECEDENCE OVER PLACEMENT DIMENSIONS INDICATED ON ENGINEERING PLANS. VERIFY ALL FIXTURE LOCATION DIMENSIONS PRIOR TO PIPING ROUGH-IN.
13. PROVIDE CALIBRATED BALANCING VALVES FOR HOT WATER RETURN SYSTEM. BALANCING MUST BE SELECTED BASED ON THE SPECIFIED SYSTEM FLOW RATE SETTINGS AND MANUFACTURER'S LISTED NOMINAL FLOW RATE RANGE. VALVE SIZES EXCEEDING THE NOMINAL FLOW RATE RANGE (HIGHER OR LOWER) MUST NOT BE USED.
14. PRIOR TO FINAL TURNOVER TO THE GOVERNMENT, ALL SINK AND LAVATORY FAUCETS AND FIXTURE FLUSH VALVES MUST BE TESTED AND ADJUSTED TO ENSURE PROPER OPERATION.
15. COORDINATE NATURAL GAS SERVICE PIPELINE ROUTING TO PREVENT CONFLICTS WITH OTHER UTILITIES, EQUIPMENT, FENCING, AND STORM DRAINS.

PLUMBING SYMBOLS

PIPING

- SANITARY OR WASTE PIPING ABOVE GRADE/SLAB
- SANITARY OR WASTE PIPING BELOW GRADE/SLAB
- CD — CONDENSATE WASTE PIPING ABOVE GRADE/SLAB
- CD — CONDENSATE WASTE PIPING BELOW GRADE/SLAB
- VENT PIPING
- COLD WATER PIPING
- B — BOOSTED DOMESTIC COLD WATER PIPING
- DOMESTIC HOT WATER PIPING
- 140° — DOMESTIC HOT WATER PIPING (140°F)
- HWR — DOMESTIC HOT WATER RETURN PIPING
- HWR 140° — DOMESTIC HOT WATER RETURN PIPING (140°F)
- CA — COMPRESSED AIR PIPING
- CAI — COMPRESSED AIR INTAKE PIPING

VALVES

SINGLE LINE	DOUBLE LINE	DESIGNATION
		PLUG VALVE
		BALL VALVE
		BUTTERFLY VALVE
		GATE VALVE
		GLOBE VALVE
		PRESSURE REGULATING VALVE/ PRESSURE REDUCING VALVE
		MANUAL BALANCING VALVE
		CHECK VALVE
		STRAINER
		BACKWATER VALVE
		VALVE IN RISER
		HOSE BIBB
		ROOF HYDRANT
		WALL HYDRANT (FREEZEPROOF)
		SAFETY RELIEF VALVE

SPECIALTIES

- HOT WATER MIXING VALVE
- FLOOR SINK
- FLOOR DRAIN
- ROOF DRAIN/AREA DRAIN/DECK DRAIN
- ROOF DRAIN
- HUB DRAIN
- VENT THROUGH ROOF
- FLOW (IN DIRECTION OF ARROW)
- ACTUATING SWITCH
- M — METER
- SEISMIC BRACING

FITTINGS

- RISER DOWN (ELBOW)
- RISER UP (ELBOW)
- RISE OR DROP
- BRANCH TOP CONNECTION
- BRANCH BOTTOM CONNECTION
- UNION
- CAP
- CLEANOUT
- FLOOR/EXTERIOR CLEANOUT

NOTE:
REFER TO FLOOR PLANS AND DETAILS FOR EXTENT OF SYMBOLS AND ABBREVIATIONS USED.

GENERAL IDENTIFICATION

- WH / 1 — EQUIPMENT TYPE / SCHEDULE REFERENCE — EQUIPMENT MARK
- PDI-A — WATER HAMMER ARRESTER MARK; PLUMBING DRAINAGE INSTITUTE WATER HAMMER ARRESTER SIZE
- 0.01 — RISER CONTINUATION MARK
- POINT OF CONNECTION BETWEEN NEW AND EXISTING CONSTRUCTION
- POINT OF REMOVAL - DEMOLITION
- (E) — EXISTING EQUIPMENT/PIPING DESIGNATION

NOTE:
IF THIS DRAWING IS LESS THAN 34" X 22"
IT IS A REDUCED SIZE DRAWING

SYM	DESCRIPTION	DATE	APPR
1	MOD P00005	05/2023	
2	MOD P00006 AND MOD P00007	10/2025	

NAVFAC

JOHN EDWARD BAMFORTH, LICENSE No 56893, STATE OF FLORIDA, PROFESSIONAL ENGINEER

BAMFORTH ENGINEERS + SURVEYORS

AE INFO

APPROVED

FOR COMMANDER NAVFAC 11/21/2025

ACTIVITY: Approved by J. Scott Roberts, Asset Management Branch Head & Supervisory Facility Planner, PWD Beaufort, SC via email.

SATISFACTORY TO DATE 12/15/2022

DES	CRF	DRW	HES	CHK	DSR
PM/DM					KTB / RLH
BRANCH MANAGER					ALG
CHIEF ENG/ARCH					EJA
FP ENGINEER					DSN

DEPARTMENT OF THE NAVY
NAVAL FACILITIES ENGINEERING SYSTEMS COMMAND - MID-ATLANTIC
DC CORE NORFOLK, VA

MCAS BEAUFORT
BEAUFORT, SC
P-475 AIRCRAFT MAINTENANCE HANGAR - VOLUME 3 (OSF OPTION)

PLUMBING SYMBOLS AND GENERAL NOTES

SCALE:	NTS
EPROJECT NO.:	1363603
CONSTR. CONTR. NO.	
NAVFAC DRAWING NO.	12860188
SHEET	987 OF 1412

OPP001

DRAWFORM REVISION: 25 AUGUST 2020

Autodesk Docs://P0042 VMFA1 505F35 Maintenance Hangar/P0042 F35 Maint Hangar_OSF Shop Annex_PL-V3024.rvt
11/6/2025 3:21:45 PM

ABBREVIATIONS

ABB	DESCRIPTION	ABB	DESCRIPTION	ABB	DESCRIPTION
AC	AIR COMPRESSOR	FD	FLOOR DRAIN	PT	PLASTER TRAP
AD	AREA DRAIN	FFE	FINISHED FLOOR ELEVATION	PV	PLUG VALVE
AFF	ABOVE FINISHED FLOOR	FLR	FLOOR	PWB	PLUMBING WALL BOX
APR	AIR PRESSURE REDUCING STATION	FM	FORCE MAIN	RD	ROOF DRAIN
ASL	ABOVE SEA LEVEL	FS	FLOOR SINK	REF	REFERENCE
ART	AIR RECEIVER TANK	FW	FILTERED WATER	REG	REGULATING
AUTO	AUTOMATIC	G	NATURAL GAS	REQD	REQUIRED
BAS	BUILDING AUTOMATION SYSTEM	GAL	GALLON	RHY	ROOF HYDRANT
BDCW	BOOSTED DOMESTIC COLD WATER	GD	GARBAGE DISPOSAL	RP	RECIRCULATION PUMP
BFF	BELOW FINISHED FLOOR	GTV	GATE VALVE	RPM	REVOLUTIONS PER MINUTE
BFG	BELOW FINISHED GRADE	GV	GLOBE VALVE	RW	RAINWATER
BFP	BACKFLOW PREVENTER	HB	HOSE BIBB	S	SINK
BDHW	BOOSTED DOMESTIC HOT WATER	HD	HUB DRAIN	SAN	SANITARY
BSMT	BASEMENT	HP	HORSEPOWER	SD	SITE DRAIN
BTUH	BRITISH THERMAL UNITS PER HOUR	HVAC	HEATING / VENTILATING / AIR CONDITIONING	SDU	SUPPLY AND DRAIN UNIT
BV	BALL VALVE	IMB	ICE MAKER BOX	SH	SHOWER
BWV	BACKWATER VALVE	INV	INVERT	SK	SINK
CA	COMPRESSED AIR	I.E.	INVERT ELEVATION	SP	SUMP PUMP
CAI	COMPRESSED AIR INTAKE	IPC	INTERNATIONAL PLUMBING CODE	SQ	SQUARE
CD	CONDENSATE WASTE	IW	INDUSTRIAL WASTE	SRW	SECONDARY RAINWATER
CFM	CUBIC FEET PER MINUTE	JS	JANITOR'S SINK	SRD	SECONDARY ROOF DRAIN
CFH	CUBIC FEET PER HOUR	JSN	JOINT SCHEDULE NUMBER	TEMP	TEMPERATURE
CO	CLEANOUT	L	LAVATORY	TMV	THERMOSTATIC MIXING VALVE
CONN	CONNECTION	LAV	LAVATORY	TP	TRAP PRIMER
CONT	CONTINUATION	LVL	LEVEL	TYP	TYPICAL
CV	CHECK VALVE	MAX	MAXIMUM	UR	URINAL
CW	DOMESTIC COLD WATER	MIN	MINIMUM	V	VENT
HW	DOMESTIC HOT WATER	MS	MOP SINK	VTR	VENT THROUGH ROOF
HWR	DOMESTIC HOT WATER RETURN	MX	MIXING VALVE	W	WASTE
DN	DOWN	(N.C.)	NORMALLY CLOSED	W/	WITH
DWG	DRAWING	(N.O.)	NORMALLY OPEN	WC	WATER CLOSET
EA	EACH	NPT	NATIONAL PIPE THREAD	WCO	WALL CLEANOUT
ECO	EXTERIOR CLEANOUT	PB	PRESSURE BOOSTER	WF	WASH FOUNTAIN
ELEC	ELECTRIC	PBT	PRESSURE BOOSTER BUFFER TANK	WH	WATER HEATER
ELEV	ELEVATION	PDI	PLUMBING DRAINAGE INSTITUTE	WHA	WATER HAMMER ARRESTER
ESEW	EMERGENCY SHOWER / EYEWASH	PRESS	PRESSURE	WHY	WALL HYDRANT
ET	EXPANSION TANK	PRV	PRESSURE REDUCING VALVE	WM	WATER METER
ETP	ELECTRONIC TRAP PRIMER	PSI	POUNDS PER SQUARE INCH	YHY	YARD HYDRANT
EW	EYE WASH	PSIG	POUNDS PER SQUARE INCH GAGE		
FCO	FLOOR CLEANOUT				

NOTE:
REFER TO FLOOR PLANS AND DETAILS FOR EXTENT OF SYMBOLS AND ABBREVIATIONS USED.

NOTE:
IF THIS DRAWING IS LESS THAN 34" X 22"
IT IS A REDUCED SIZE DRAWING

NO	DESCRIPTION	DATE	APPR
1	MOD P00005	05/2023	
2	MOD P00006 AND MOD P00007	10/2025	

NAVFAC

JOHN EDWARD BAMFORTH
LICENSE
No 66893
STATE OF FLORIDA
PROFESSIONAL ENGINEER
SEAL

BAMFORTH
ENGINEERS & SURVEYORS
AE INFO

APPROVED
FOR COMMANDER NAVFAC 11/21/2022
ACTIVITY
Approved by J. Scott Roberts,
Asset Management Branch Head &
Supervisory Facility Planner, PWD
Beaufort, SC via email.

SATISFACTORY TO DATE	12/15/2022
DES CRF / DRW HES / CHK DSR	
PM/DM	KTB / RLH
BRANCH MANAGER	ALG
CHIEF ENG/ARCH	EJA
FP ENGINEER	DSN

DEPARTMENT OF THE NAVY
NAVAL FACILITIES ENGINEERING SYSTEMS COMMAND
DC CORE
NAVAL FACILITIES ENGINEERING SYSTEMS COMMAND - MID-ATLANTIC
NORFOLK, VA
MCAS BEAUFORT
BEAUFORT, SC
P-475 AIRCRAFT MAINTENANCE HANGAR - VOLUME 3 (OSF OPTION)
PLUMBING ABBREVIATIONS

SCALE:	NTS
EPROJECT NO.:	1363603
CONSTR. CONTR. NO.	
NAVFAC DRAWING NO.	12860189
SHEET	988 OF 1412

OPP002

DRAWFORM REVISION: 25 AUGUST 2020

Autodesk Docs://2043 WEAT 502 F36 Maintenance Hangar/2043 F36 Maint Hangar_OSF Shop Annex_PL_V2024.rvt
11/6/2025 3:21:45 PM

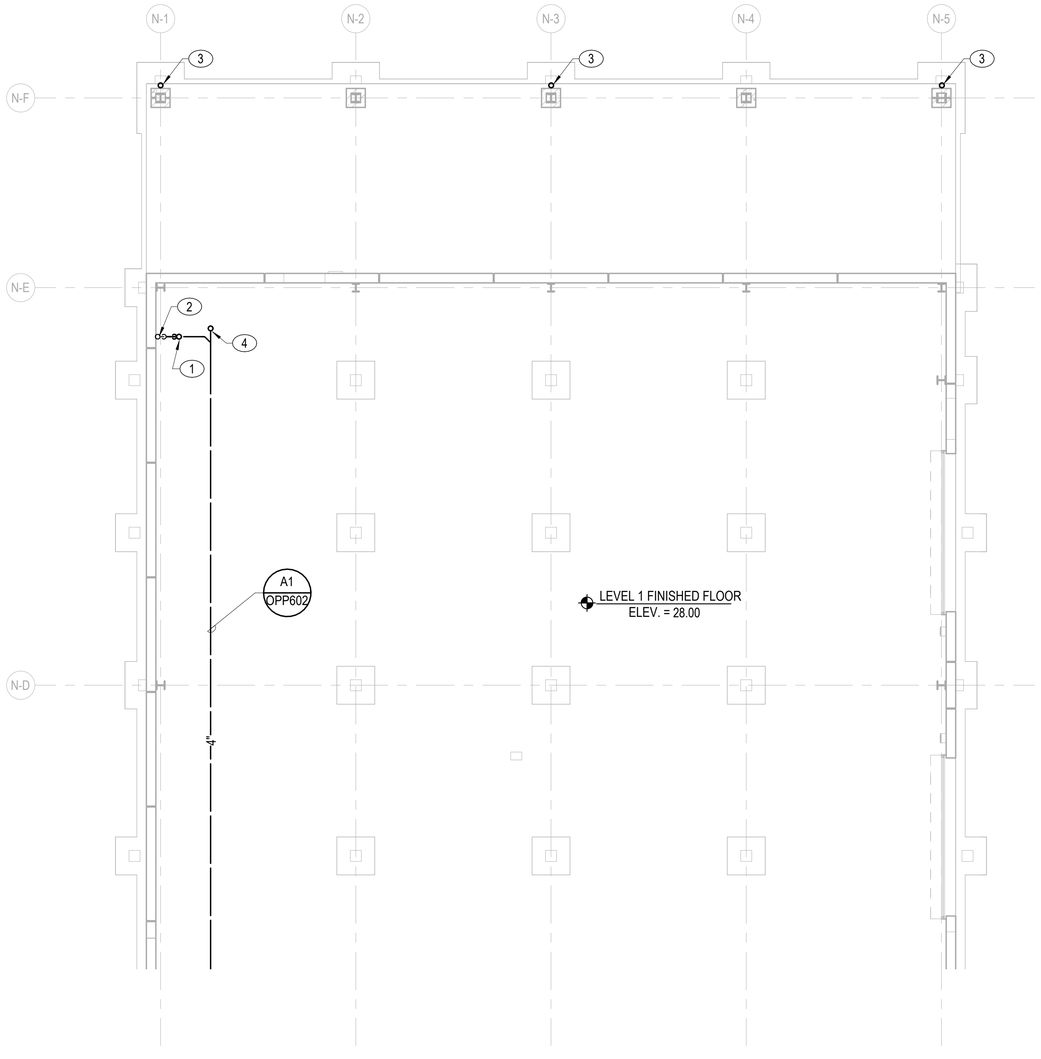

NOTES:

SHEET NOTES:

A. ALL PIPE HANGERS BELOW THE STRUCTUAL SLAB AND EXPOSED TO SOIL ARE REQUIRED TO BE ALL STAINLESS STEEL CONSTRUCTION. SEE DETAIL C4/OPP504.

KEY NOTES (00)

1. 4" SANITARY UP TO FLOOR SINK.
2. 2" VENT UP.
3. STORM DOWNSPOUT CONNECTION. SEE CIVIL DRAWINGS SHEET CG513 FOR DOWNSPOUT BOOT TRANSITIONING FROM DOWNSPOUT TO UNDERGROUND STORM PIPING.
4. 4" SANITARY UP TO CLEANOUT.

A1 UNDERGROUND PLUMBING PLAN - SECTOR A

1/8" = 1'-0"

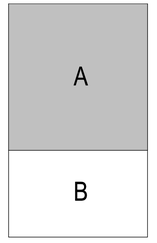

KEYPLAN

PLAN NORTH

N

0 5' 10' 20' 30'

1/8" = 1'-0" GRAPHIC SCALE

NOTE:
IF THIS DRAWING IS LESS THAN 34" X 22"
IT IS A REDUCED SIZE DRAWING

SYM	DESCRIPTION	DATE	APPR
1	MOD P00005	05/2023	
2	MOD P00006 AND MOD P00007	10/2025	

NAVFAC

JOHN EDWARD BAMFORTH
LICENSE
No 56893
STATE OF FLORIDA
PROFESSIONAL ENGINEER
SEAL

BAMFORTH
ENGINEERING & SURVEYING
AE INFO

APPROVED

FOR COMMANDER NAVFAC 11/21/2025

ACTIVITY
Approved by J. Scott Roberts,
Asset Management Branch Head &
Supervisory Facility Planner, PWD
Beaufort, SC via email.

SATISFACTORY TO DATE	12/15/2022
DES CRF / DRW HES / CHK DSR	
PM/DM	KTB / RLH
BRANCH MANAGER	ALG
CHIEF ENG/ARCH	EJA
FP ENGINEER	DSN

DEPARTMENT OF THE NAVY
NAVAL FACILITIES ENGINEERING SYSTEMS COMMAND
DC.CORE

NAVAL FACILITIES ENGINEERING SYSTEMS COMMAND - MID-ATLANTIC
NORFOLK, VA.

MCAS BEAUFORT
BEAUFORT, SC

P-475 AIRCRAFT MAINTENANCE HANGAR - VOLUME 3 (OSF OPTION)

OSF / SHOP ANNEX - UNDERGROUND PLUMBING PLAN - SECTOR A

SCALE:	1/8" = 1'-0"
EPROJECT NO.:	1363603
CONSTR. CONTR. NO.	
NAVFAC DRAWING NO.	12860190
SHEET	989 OF 1412

OPP100A

DRAWFORM REVISION: 25 AUGUST 2020

Autodesk Docs://20043 WEAT 502 F38 Maintenance Hangar/20043 F38 Maint Hangar_OSF Shop Annex_PL.rvt
11/6/2025 3:21:46 PM

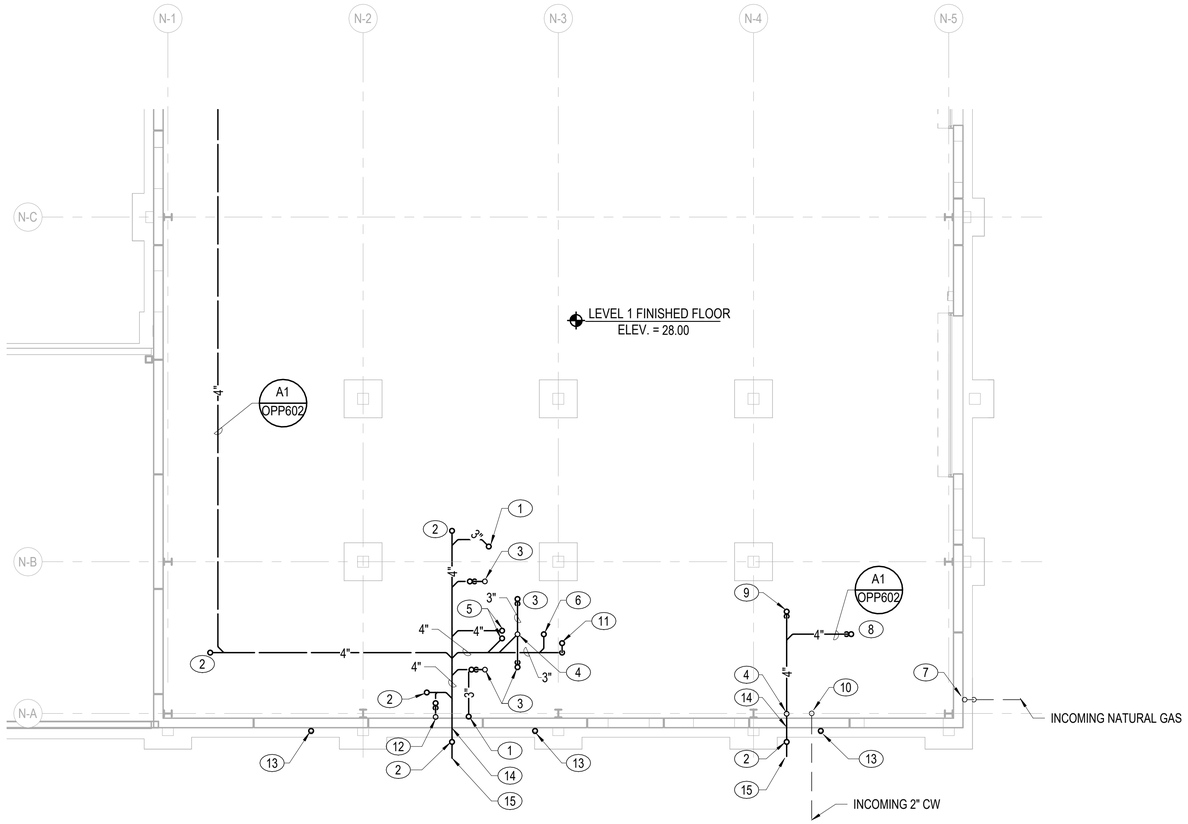

A1 UNDERGROUND PLUMBING PLAN - SECTOR B
1/8" = 1'-0"

NOTES:

SHEET NOTES:

A. ALL PIPE HANGERS BELOW THE STRUCTUAL SLAB AND EXPOSED TO SOIL ARE REQUIRED TO BE ALL STAINLESS STEEL CONSTRUCTION. SEE DETAIL C4/OPP504.

KEY NOTES (00)

1. 3" SANITARY UP TO SERVICE SINK.
2. 4" SANITARY UP TO CLEANOUT.
3. 3" SANITARY UP TO FLOOR DRAIN.
4. 2" VENT UP.
5. 4" SANITARY UP TO WATER CLOSET.
6. 3" SANITARY UP TO LAVATORY.
7. INCOMING NATURAL GAS UP. COORDINATE WITH THE GAS COMPANY, DOMINION ENERGY FOR INCOMING PIPE SIZE, GAS PRESSURE, AND METER UP TO THE BUILDING. PROVIDE POLYETHYLENE PIPING MATERIALS FOR INCOMING UNDERGROUND GAS PIPING.
8. 4" SANITARY UP TO FLOOR SINK.
9. 4" SANITARY UP TO FLOOR DRAIN.
10. 2" INCOMING DOMESTIC WATER UP.
11. 2" SANITARY UP TO ELECTRIC WATER COOLER.
12. 3" SANITARY UP TO MOP SINK.
13. STORM DOWNSPOUT CONNECTION. SEE CIVIL DRAWINGS SHEET CG513 FOR DOWNSPOUT BOOT TRANSITIONING FROM DOWNSPOUT TO UNDERGROUND STORM PIPING.
14. REFER TO STRUCTURAL DRAWING SHEET OSB502 WHEN PIPING PASSING THRU GRADE BEAM.
15. 4" SANITARY BELOW GRADE. I.E. = 24.50'. REFER TO CIVIL DRAWINGS FOR CONTINUATION.

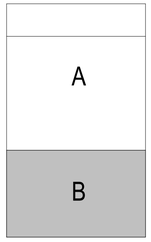

KEYPLAN

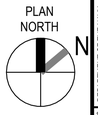

0 5' 10' 20' 30'
1/8" = 1'-0" GRAPHIC SCALE

NOTE:
IF THIS DRAWING IS LESS THAN 34" X 22"
IT IS A REDUCED SIZE DRAWING

SYM	DESCRIPTION	DATE	APPR
1	MOD P00005	05/2023	
2	MOD P00006 AND MOD P00007	10/2025	

NAVFAC

JOHN EDWARD BALD
LICENSE
No 66893
STATE OF FLORIDA
PROFESSIONAL ENGINEER
SEAL

BAMFORTH
ENGINEERS + SURVEYORS
A/E INFO

APPROVED
FOR COMMANDER NAVFAC 11/21/2025

ACTIVITY
Approved by J. Scott Roberts, Asset Management Branch Head & Supervisory Facility Planner, PWD Beaufort, SC via email.

SATISFACTORY TO DATE	12/15/2022
DES CRF	DRW HES CHK DSR
PM/DM	KTB / RLH
BRANCH MANAGER	ALG
CHIEF ENG/ARCH	EJA
FP ENGINEER	DSN

DEPARTMENT OF THE NAVY
NAVAL FACILITIES ENGINEERING SYSTEMS COMMAND
NAVAL FACILITIES ENGINEERING SYSTEMS COMMAND ~ MID-ATLANTIC
NORFOLK, VA
DC CORE
MCAS BEAUFORT
BEAUFORT, SC
P-475 AIRCRAFT MAINTENANCE HANGAR - VOLUME 3 (OSF OPTION)
OSF / SHOP ANNEX - UNDERGROUND PLUMBING PLAN - SECTOR B

SCALE:	1/8" = 1'-0"
EPROJECT NO.:	1363603
CONSTR. CONTR. NO.	
NAVFAC DRAWING NO.	12860191
SHEET	990 OF 1412

OPP100B

DRAWFORM REVISION: 25 AUGUST 2020

Autodesk Docs://20042 VMFAT 502 F35 Maintenance Hangar/20042 F35 Maint Hangar_OSF Shop Annex_PL-V2024.rvt
11/6/2025 3:21:47 PM

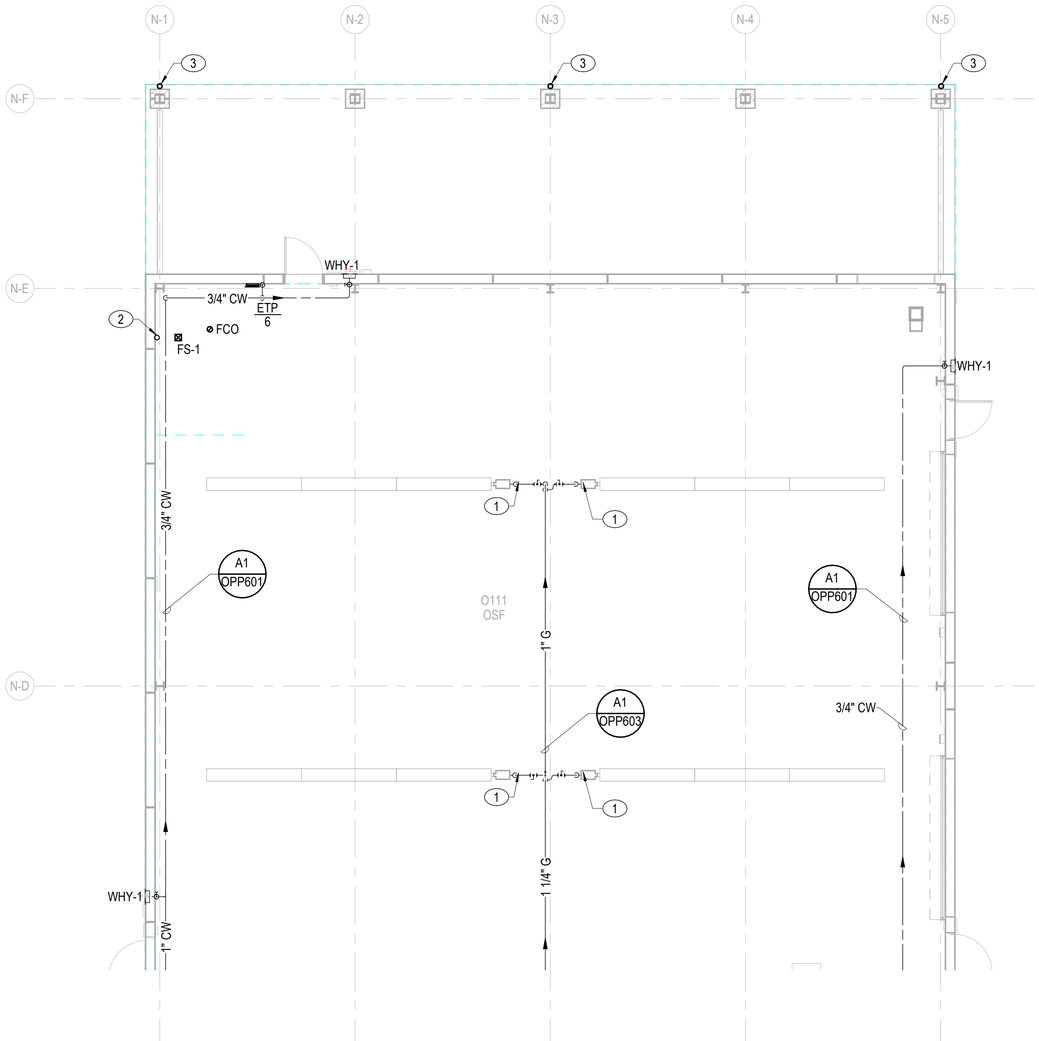

NOTES:

KEY NOTES (00)

1. 1/2" GAS CONNECTION TO RADIANT HEATER (50 MBH). PROVIDE PRESSURE REGULATOR SET AT 0.5 PSI AND DIRT LEG. PROVIDE 3/8" VTR PIPING FROM GAS PRESSURE REGULATOR.
2. 2" VTR.
3. STORM DOWNSPOUT CONNECTION. SEE CIVIL DRAWINGS SHEET CG513 FOR DOWNSPOUT BOOT TRANSITIONING FROM DOWNSPOUT TO UNDERGROUND STORM PIPING.

A1 PLUMBING PLAN - GROUND FLOOR - SECTOR A

1/8" = 1'-0"

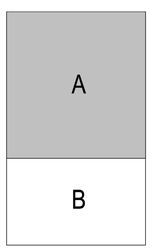

PLAN NORTH

N

KEYPLAN

0 5' 10' 20' 30'

1/8" = 1'-0" GRAPHIC SCALE

NOTE:
IF THIS DRAWING IS LESS THAN 34" X 22"
IT IS A REDUCED SIZE DRAWING

NO.	SYM	DESCRIPTION	DATE	APPR
1		MOD P00005	05/2023	
2		MOD P00006 AND MOD P00007	10/2025	

NAVFAC

JOHN EDWARD BAMFORTH
LICENSE
No 56893
STATE OF FLORIDA
PROFESSIONAL ENGINEER
SEAL

BAMFORTH
ENGINEERING & SURVEYING
AE INFO

APPROVED
FOR COMMANDER NAVFAC 11/21/2025
ACTIVITY Approved by J. Scott Roberts, Asset Management Branch Head & Supervisory Facility Planner, PWD Beaufort, SC via email.

SATISFACTORY TO DATE	12/15/2022
DES CRF / DRW HES / CHK DSR	
PM/DM	KTB / RLH
BRANCH MANAGER	ALG
CHIEF ENGIARCH	EJA
FP ENGINEER	DSN

DEPARTMENT OF THE NAVY
NAVAL FACILITIES ENGINEERING SYSTEMS COMMAND
DC CORE

NAVAL FACILITIES ENGINEERING SYSTEMS COMMAND - MID-ATLANTIC
NORFOLK, VA

MCAS BEAUFORT
BEAUFORT, SC

P-475 AIRCRAFT MAINTENANCE HANGAR - VOLUME 3 (OSF OPTION)

OSF / SHOP ANNEX - PLUMBING PLAN - GROUND FLOOR - SECTOR A

SCALE:	1/8" = 1'-0"
EPROJECT NO.:	1363603
CONSTR. CONTR. NO.	
NAVFAC DRAWING NO.	12860192
SHEET	991 OF 1412

OPP101A

DRAWFORM REVISION: 25 AUGUST 2020

Autodesk Docs://20043 MFA1 503 FB Maintenance Hangar/20043 F39 Maint Hangar_OSF Shop Annex_PL.rvt2024.rvt
11/6/2025 3:21:49 PM

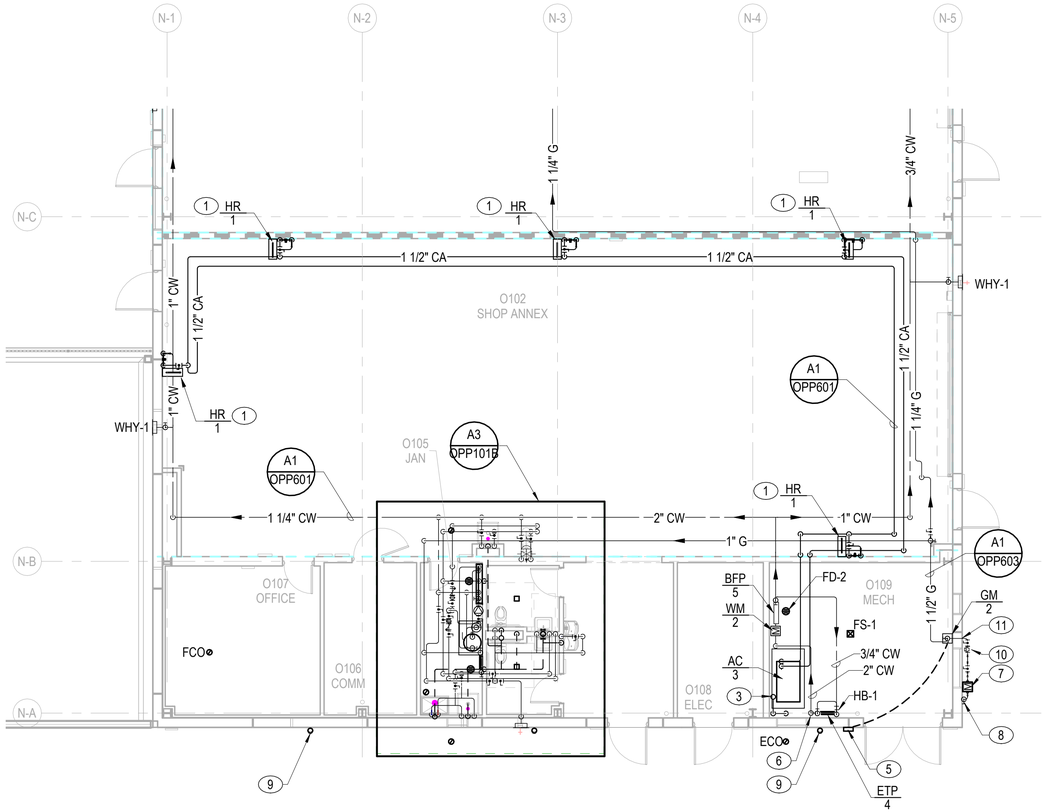

A1 PLUMBING PLAN - GROUND FLOOR - SECTOR B

1/8" = 1'-0"

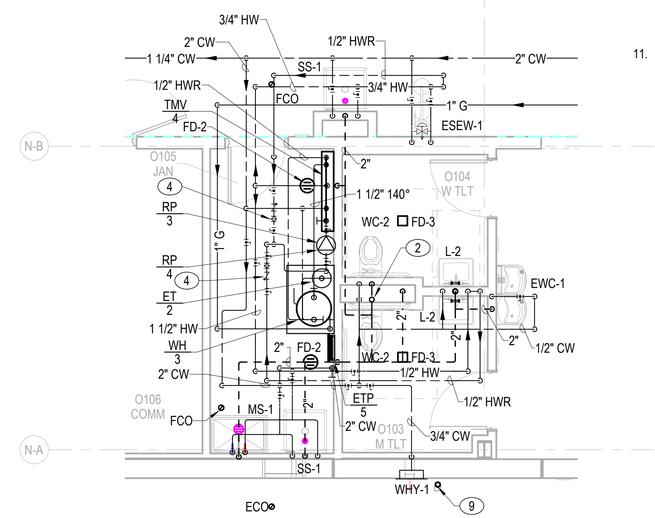

A3 PLUMBING PLAN - GROUND FLOOR - SECTOR B - ENLARGED

1/4" = 1'-0"

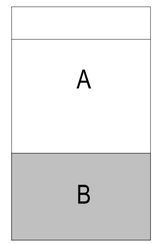

KEYPLAN

PLAN NORTH N

0 5' 10' 20' 30'

1/8" = 1'-0" GRAPHIC SCALE

NOTE:
IF THIS DRAWING IS LESS THAN 34" X 22"
IT IS A REDUCED SIZE DRAWING

NOTES:

SHEET NOTES:

A. PROVIDE ALL LAVATORY FAUCETS WITH POINT OF USE TYPE ASSE 1070 THERMOSTATIC MIXING VALVES.

B. BALANCING VALVES AND SHUT-OFF VALVES WITH IN HARD CEILING SPACE MUST BE COORDINATED TO BE ACCESSIBLE THROUGH ACCESS PANEL.

KEY NOTES (00)

1. HOSE REEL WALL MOUNTED AT 6'-9' A.F.F. SEE DETAIL A4/OPP502.
2. 3" VTR.
3. 2" VTR.
4. BALANCING VALVE SET AT 0.5 GPM.
5. PROVIDE EMERGENCY GAS SHUT OFF VALVE & SWITCH TO SHUT DOWN GAS SUPPLY TO BUILDING. INSTALL TO PROTECT FROM PHYSICAL DAMAGE. IDENTIFY WITH METAL TAG OR OTHER MEANS OF PERMENANT ATTACHMENT BY INSTALLING AGENCY SO THAT GAS SYSTEMS ARE EASILY IDENTIFIED.
6. 2" INCOMING DOMESTIC COLD WATER. WATER PIPE SIZES ARE BASED ON A MINIMUM WORKING PRESSURE OF 53 PSIG AT A FLOW RATE OF 47 GPM AT THE LOCATION WHERE THE MAIN SERVICE ENTERS THE BUILDING.
7. GAS METER/REGULATOR PROVIDED BY DOMINION ENERGY SET AT 14" W.C. 275.1 MBH AT 160 LF DEVELOPED LENGTH.
8. 1" INCOMING GAS MAIN.
9. STORM DOWNSPOUT CONNECTION. SEE CIVIL DRAWINGS SHEET CG513 FOR DOWNSPOUT BOOT TRANSITIONING FROM DOWNSPOUT TO UNDERGROUND STORM PIPING.
10. PROVIDE SEISMIC SHUT OFF VALVE DOWN STREAM OF MANUAL SHUT OFF VALVE BEFORE ENTERING THE BUILDING.
11. REFER TO DETAIL C4/OPP504 FOR FLEX CONNECTION AS PIPING ENTER THE BUILDING.

NO	SYM	DESCRIPTION	DATE	APPR
1		MOD P00005	05/2023	
2		MOD P00006 AND MOD P00007	10/2025	

NAVFAC

JOHN EDWARD BAMFORTH LICENSE No 56893 STATE OF FLORIDA PROFESSIONAL ENGINEER SEAL

BAMFORTH ENGINEERING & DESIGN, PLLC

AE INFO

APPROVED

FOR COMMANDER NAVFAC 11/21/2025

ACTIVITY: Approved by: J. Scott Roberts, Asset Management Branch Head & Supervisory Facility Planner, PWD Beaufort, SC via email.

SATISFACTORY TO DATE 12/15/2022

DES	CRF	DRW	HES	CHK	DSR
PM/DM					KTB / RLH
BRANCH MANAGER					ALG
CHIEF ENG/ARCH					EJA
FP ENGINEER					DSN

DEPARTMENT OF THE NAVY
NAVAL FACILITIES ENGINEERING SYSTEMS COMMAND
DC CORE

NAVAL FACILITIES ENGINEERING SYSTEMS COMMAND – MID-ATLANTIC
NORFOLK, VA

MCAS BEAUFORT
BEAUFORT, SC

P-475 AIRCRAFT MAINTENANCE HANGAR - VOLUME 3 (OSF OPTION)

OSF / SHOP ANNEX - PLUMBING PLAN - GROUND FLOOR - SECTOR B

SCALE:	As indicated
EPROJECT NO.:	1363603
CONSTR. CONTR. NO.	
NAVFAC DRAWING NO.	12860193
SHEET	992 OF 1412

OPP101B

DRAWFORM REVISION 25 AUGUST 2020

Autodesk Docs://20042 NAFAC 500 FSK Maintenance Hangar/20042 FSK Maint Hangar_OSF Shop Annex_PL-V2024.rvt
11/6/2025 3:21:51 PM

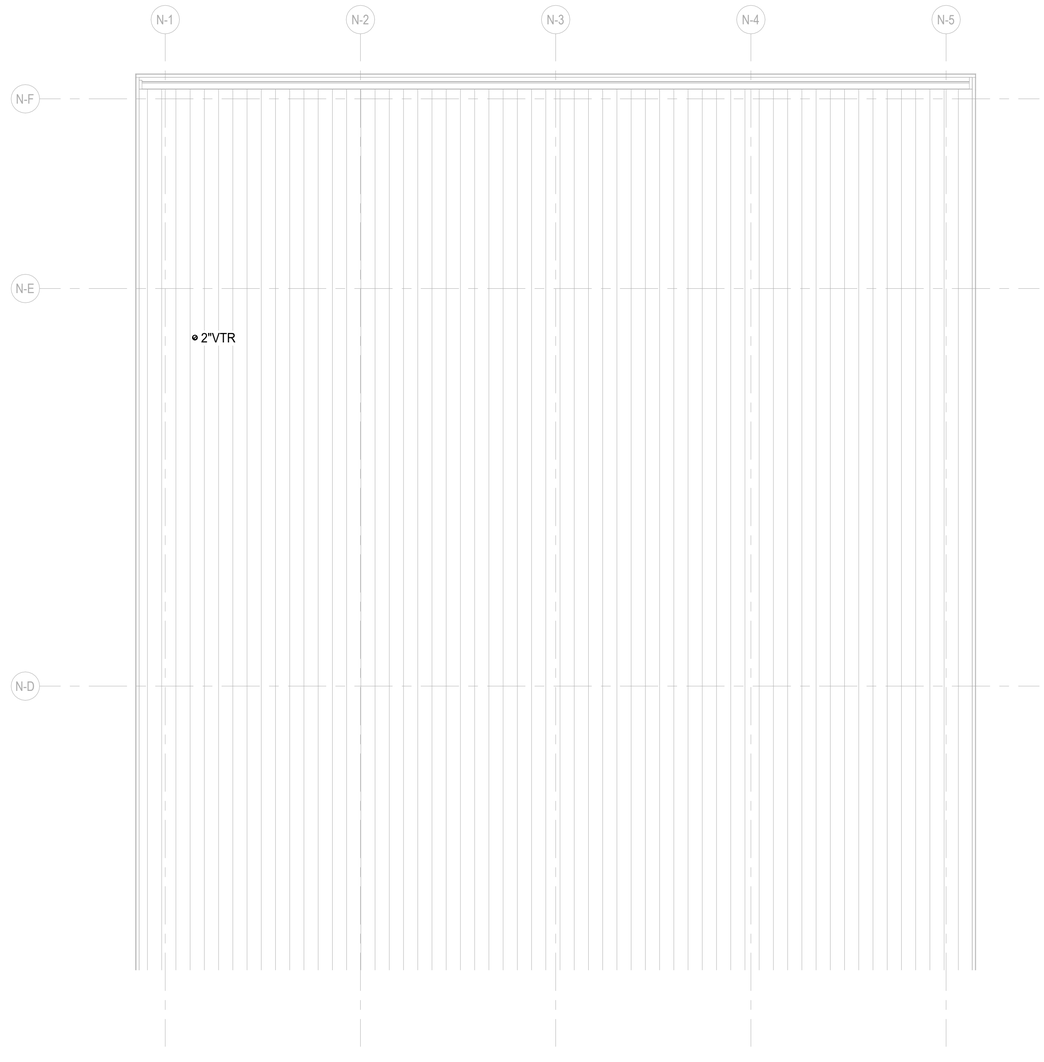

A1 PLUMBING PLAN - ROOF - SECTOR A
1/8" = 1'-0"

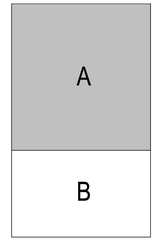

KEYPLAN

PLAN NORTH N

0 5' 10' 20' 30'
1/8" = 1'-0" GRAPHIC SCALE

NOTE:
IF THIS DRAWING IS LESS THAN 34" X 22"
IT IS A REDUCED SIZE DRAWING

NO	DESCRIPTION	DATE	APPR
1	MOD P00005	05/2023	
2	MOD P00006 AND MOD P00007	10/2025	

NAVFAC

JOHN EDWARD BAMFORTH
LICENSE
No 56893
STATE OF FLORIDA
PROFESSIONAL ENGINEER
SEAL

BAMFORTH
ENGINEERING & SURVEYING
AE INFO

APPROVED
FOR COMMANDER NAVFAC 11/21/2022
ACTIVITY
Approved by J. Scott Roberts,
Asset Management Branch Head &
Supervisory Facility Planner, PWD
Beaufort, SC via email.

SATISFACTORY TO DATE	12/15/2022
DES CRF / DRW HES / CHK DSR	
PM/DM	KTB / RLH
BRANCH MANAGER	ALG
CHIEF ENG/ARCH	EJA
FP ENGINEER	DSN

DEPARTMENT OF THE NAVY
NAVAL FACILITIES ENGINEERING SYSTEMS COMMAND
DC CORE
NAVAL FACILITIES ENGINEERING SYSTEMS COMMAND - MID-ATLANTIC
NORFOLK, VA.
MCAS BEAUFORT
BEAUFORT, SC
P-475 AIRCRAFT MAINTENANCE HANGAR - VOLUME 3 (OSF OPTION)
OSF / SHOP ANNEX - PLUMBING PLAN - ROOF - SECTOR A

SCALE:	1/8" = 1'-0"
EPROJECT NO.:	1363603
CONSTR. CONTR. NO.	
NAVFAC DRAWING NO.	12860194
SHEET	993 OF 1412

OPP102A

DRAWFORM REVISION: 25 AUGUST 2020

Autodesk Docs://2043 WEAT 502 F36 Maintenance Hangar/2043 F36 Maint Hangar - OSF Shop Annex_PL_V2024.rvt
11/6/2025 3:21:52 PM

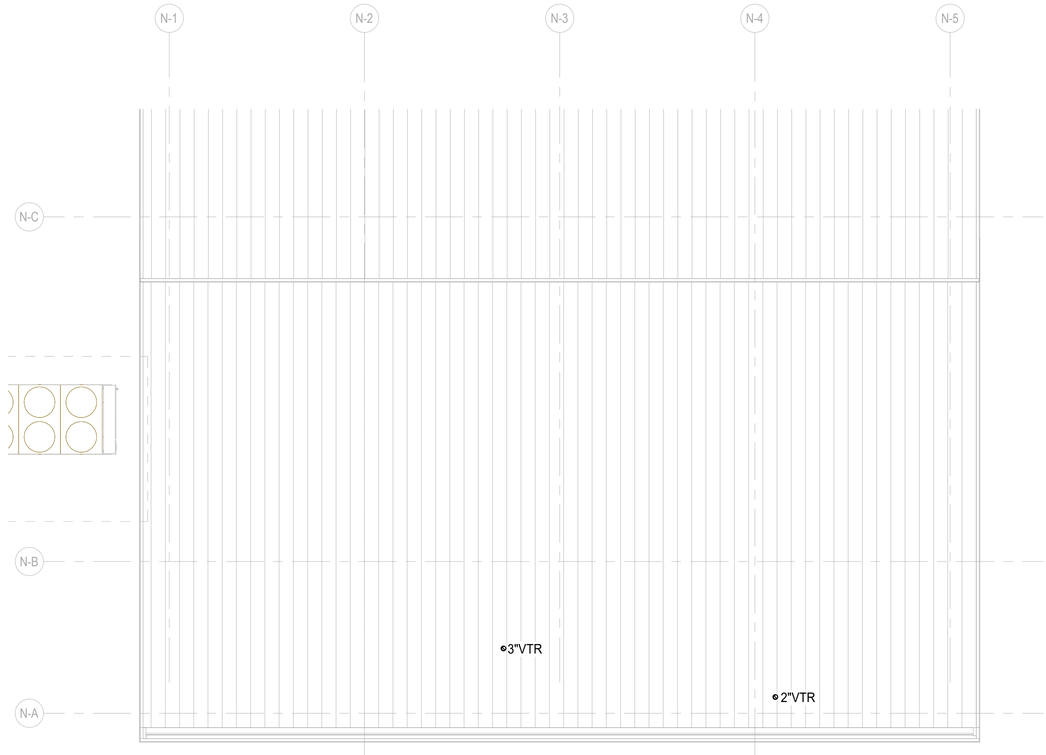

A1 PLUMBING PLAN - ROOF - SECTOR B
1/8" = 1'-0"

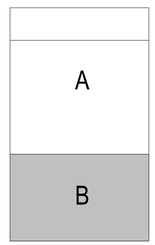

KEYPLAN

PLAN NORTH N

0 5' 10' 20' 30'
1/8" = 1'-0" GRAPHIC SCALE

NOTE:
IF THIS DRAWING IS LESS THAN 34" X 22"
IT IS A REDUCED SIZE DRAWING

SYM	DESCRIPTION	DATE	APPR
1	MOD P00005	05/2023	
2	MOD P00006 AND MOD P00007	10/2025	

NAVFAC

JOHN EDWARD BAMFORTH
LICENSE
No 56893
STATE OF FLORIDA
PROFESSIONAL ENGINEER
SEAL

BAMFORTH
ENGINEERING & SURVEYING
AE INFO

APPROVED
FOR COMMANDER NAVFAC 11/21/2025

ACTIVITY
Approved by J. Scott Roberts,
Asset Management Branch Head &
Supervisory Facility Planner, PWD
Beaufort, SC via email.

SATISFACTORY TO DATE 12/15/2022

DES	CRF	DRW	HES	CHK	DSR
PM/DM					KTB / RLH
BRANCH MANAGER					ALG
CHIEF ENG/ARCH					EJA
FP ENGINEER					DSN

DEPARTMENT OF THE NAVY
NAVAL FACILITIES ENGINEERING SYSTEMS COMMAND
DC CORE
NAVAL FACILITIES ENGINEERING SYSTEMS COMMAND - MID-ATLANTIC
NORFOLK, VA.
MCAS BEAUFORT
BEAUFORT, SC
P-475 AIRCRAFT MAINTENANCE HANGAR - VOLUME 3 (OSF OPTION)
OSF / SHOP ANNEX - PLUMBING PLAN - ROOF - SECTOR B

SCALE:	1/8" = 1'-0"
EPROJECT NO.:	1363603
CONSTR. CONTR. NO.	
NAVFAC DRAWING NO.	12860195
SHEET	994 OF 1412

OPP102B

DRAWFORM REVISION: 25 AUGUST 2020

Autodesk Docs://20043 WEAT 502 F36 Maintenance Hangar/20043 F36 Maint Hangar - OSF Shop Annex_PL.rvt
11/6/2025 3:21:33 PM

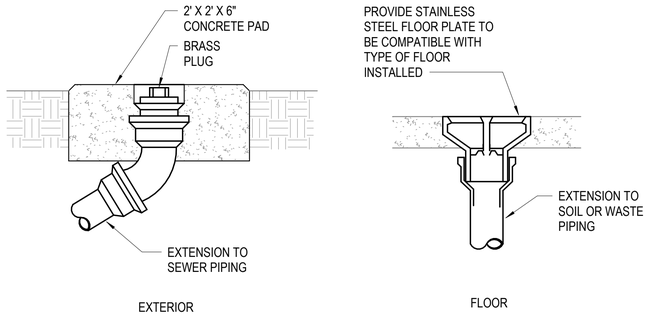

C1 CLEANOUT DETAIL
NOT TO SCALE

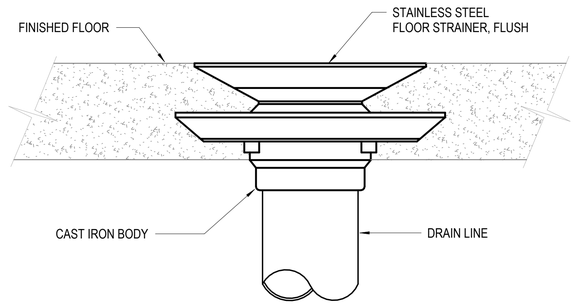

C3 FLOOR DRAIN DETAIL
NOT TO SCALE

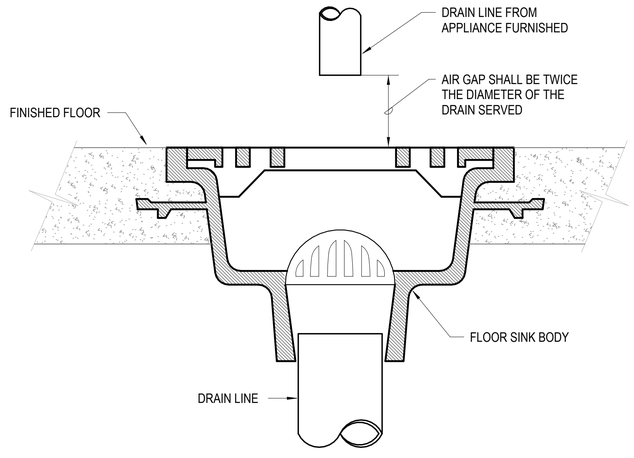

A3 FLOOR SINK DETAIL
NOT TO SCALE

NOTE:
IF THIS DRAWING IS LESS THAN 34" X 22"
IT IS A REDUCED SIZE DRAWING

NO.	DESCRIPTION	DATE	APPR
1	MOD P00005	05/2023	
2	MOD P00006 AND MOD P00007	10/2025	

NAVFAC

JOHN EDWARD BAMFORTH
LICENSE
No 56893
STATE OF
FLORIDA
PROFESSIONAL ENGINEER
SEAL

BAMFORTH
ENGINEERS & SURVEYORS
AE INFO

APPROVED
FOR COMMANDER NAVFAC 11/21/2022
ACTIVITY
Approved by J. Scott Roberts,
Asset Management Branch Head &
Supervisory Facility Planner, PWD
Beaufort, SC via email.
SATISFACTORY TO DATE 12/15/2022

DES	CRF	DRW	HES	CHK	DSR
PM/DM					KTB / RLH
BRANCH MANAGER					ALG
CHIEF ENG/ARCH					EJA
FP ENGINEER					DSN

DEPARTMENT OF THE NAVY
NAVAL FACILITIES ENGINEERING SYSTEMS COMMAND - MID-ATLANTIC
DC CORE
NAVAL FACILITIES ENGINEERING SYSTEMS COMMAND
NORFOLK, VA.
MCAS BEAUFORT
BEAUFORT, SC
P-475 AIRCRAFT MAINTENANCE HANGAR -
VOLUME 3 (OSF OPTION)
PLUMBING DETAILS

SCALE: NOT TO SCALE
EPROJECT NO.: 1363603
CONSTR. CONTR. NO.
NAVFAC DRAWING NO.
12860196
SHEET 995 OF 1412
OPP501
DRAWFORM REVISION: 25 AUGUST 2020

Autodesk Docs://2043 WEAT 502 F36 Maintenance Hangar/2043 F36 Maint Hangar_OSF Shop Annex_PL_v2024.rvt
11/6/2025 3:21:33 PM

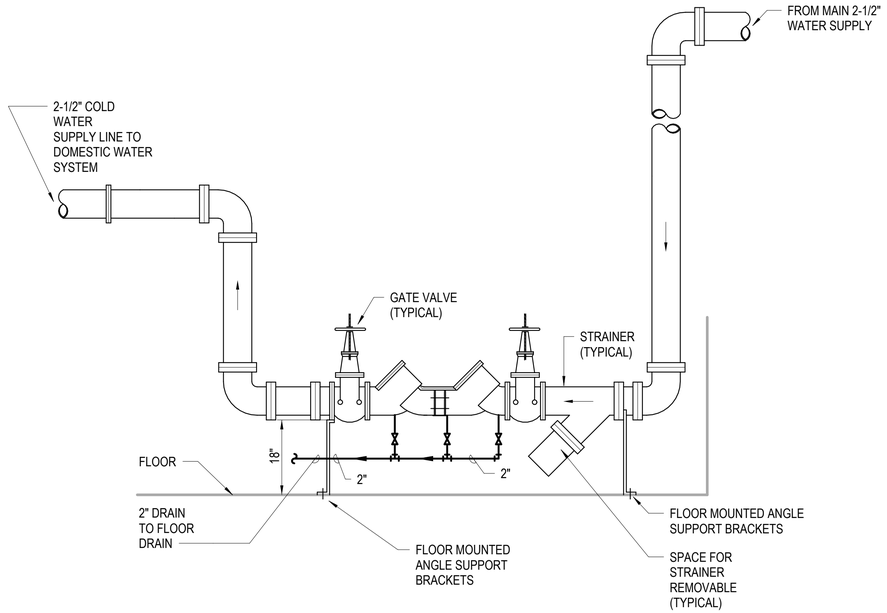

C1 BACKFLOW PREVENTER DETAIL

NOT TO SCALE

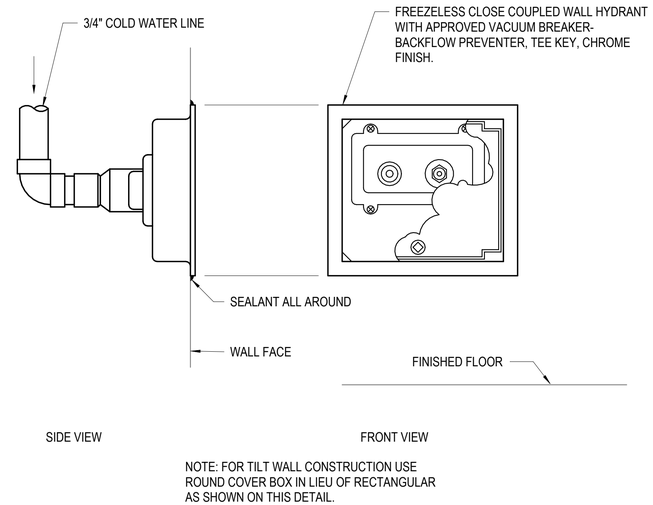

NOTE: FOR TILT WALL CONSTRUCTION USE ROUND COVER BOX IN LIEU OF RECTANGULAR AS SHOWN ON THIS DETAIL.

C3 WALL HYDRANT DETAIL

NOT TO SCALE

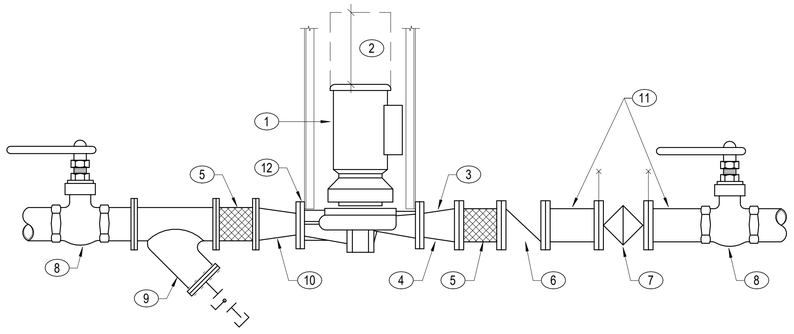

KEY NOTES:

1 RECIRCULATION PUMP.

2 MAINTAIN ACCESS RECCOMMENDED BY MANUFACTURER.

3 DISCHARGE SIDE.

4. INCREASER.

5 FLEXIBLE CONNECTOR.

6 CHECK VALVE.

7 BALANCING VALVE.

8 BALL VALVE.

9 STRAINER.

10 DECREASER.

11 PROVIDE DISTANCE UPSTREAM & DOWNSTREAM OF FLOW BALANCING VALVE AS RECOMMENDED BY MANUFACTURER.

12 SUPPORT FROM PUMP CASING, NOT PIPING.

A1 IN-LINE RECIRCULATION PUMP DETAIL

NOT TO SCALE

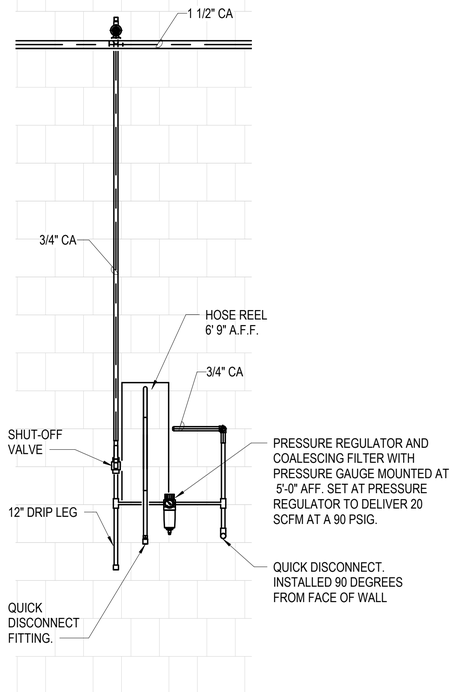

A4 HOSE REEL DETAIL

NOT TO SCALE

NOTE:
IF THIS DRAWING IS LESS THAN 34" X 22"
IT IS A REDUCED SIZE DRAWING

SYM	DESCRIPTION	DATE	APPR
1	MOD P00005	05/2023	
2	MOD P00006 AND MOD P00007	10/2025	

NAVFAC

JOHN EDWARD BALL LICENSE No 66893 STATE OF FLORIDA PROFESSIONAL ENGINEER

BAMFORTH ENGINEERS + SURVEYORS

APPROVED

FOR COMMANDER NAVFAC 11/21/2025

ACTIVITY Approved by J. Scott Roberts, Asset Management Branch Head & Supervisory Facility Planner, PWD Beaufort, SC via email.

SATISFACTORY TO DATE	12/15/2022
DES CRF / DRW HES / CHK DSR	
PM/DM	KTB / RLH
BRANCH MANAGER	ALG
CHIEF ENG/ARCH	EJA
FP ENGINEER	DSN

DEPARTMENT OF THE NAVY
NAVAL FACILITIES ENGINEERING SYSTEMS COMMAND
DC CORE
NAVAL FACILITIES ENGINEERING SYSTEMS COMMAND ~ MID-ATLANTIC
NORFOLK, VA

MCAS BEAUFORT
BEAUFORT, SC
P-475 AIRCRAFT MAINTENANCE HANGAR - VOLUME 3 (OSF OPTION)

PLUMBING DETAILS

SCALE:	As indicated
EPROJECT NO.:	1363603
CONSTR. CONTR. NO.	
NAVFAC DRAWING NO.	12860197
SHEET	996 OF 1412

OPP502

DRAWFORM REVISION: 25 AUGUST 2020

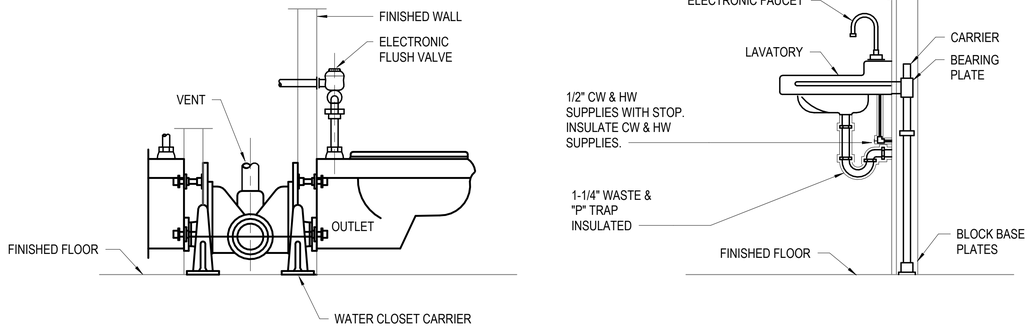

C1 TYPICAL CARRIER DETAILS

NOT TO SCALE

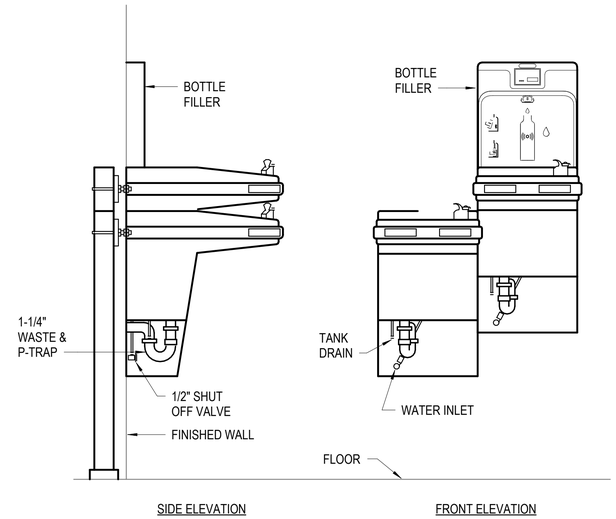

B4 HI LO ELECTRIC WATER COOLER DETAIL W/ BOTTLE FILLER

NOT TO SCALE

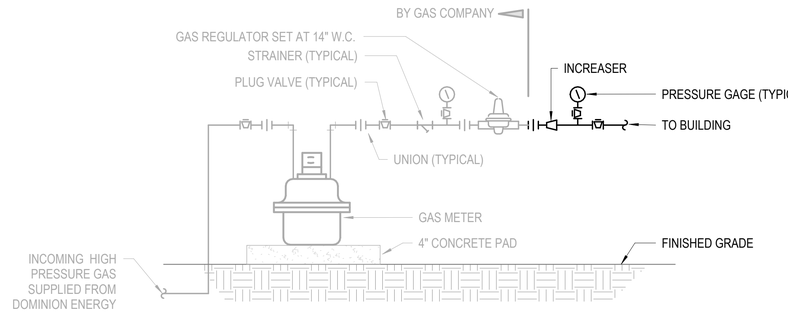

B1 GAS METER DETAIL

NOT TO SCALE

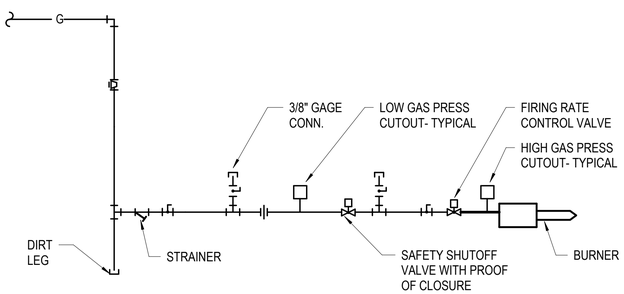

SIZE GAS TRAIN VALVES FOR INLET PRESSURE OF 14 INCHES W.C.

A1 WATER HEATER GAS TRAIN DIAGRAM

NOT TO SCALE

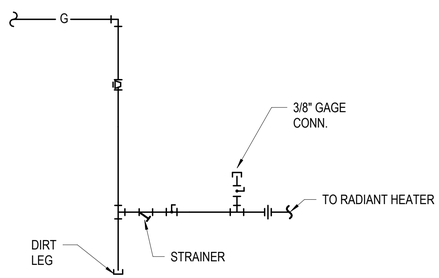

SIZE GAS TRAIN VALVES FOR INLET PRESSURE OF 14 INCHES W.C.

A3 RADIANT HEATER GAS TRAIN DIAGRAM

NOT TO SCALE

NOTE:
IF THIS DRAWING IS LESS THAN 34" X 22"
IT IS A REDUCED SIZE DRAWING

NO.	DESCRIPTION	DATE	APPR
1	MOD P00005	05/2023	
2	MOD P00006 AND MOD P00007	10/2025	

NAVFAC

JOHN EDWARD BAMFORTH LICENSE No 56893 STATE OF FLORIDA PROFESSIONAL ENGINEER

BAMFORTH ENGINEERING & DESIGN, PLLC

A/E INFO

APPROVED

FOR COMMANDER NAVFAC 11/21/2025

ACTIVITY: Approved by J. Scott Roberts, Asset Management Branch Head & Supervisory Facility Planner, PWD Beaufort, SC via email.

SATISFACTORY TO DATE 12/15/2022

DES	CRF	DRW	HES	CHK	DSR
PM/DM					KTB / RLH
BRANCH MANAGER					ALG
CHIEF ENG/ARCH					EJA
FP ENGINEER					DSN

DEPARTMENT OF THE NAVY
NAVAL FACILITIES ENGINEERING SYSTEMS COMMAND
DC CORE

NAVAL FACILITIES ENGINEERING SYSTEMS COMMAND - MID-ATLANTIC
NORFOLK, VA

MCAS BEAUFORT
BEAUFORT, SC

P-475 AIRCRAFT MAINTENANCE HANGAR - VOLUME 3 (OSF OPTION)

PLUMBING DETAILS

SCALE:	NOT TO SCALE
EPROJECT NO.:	1363603
CONSTR. CONTR. NO.	
NAVFAC DRAWING NO.	12860198
SHEET	997 OF 1412

OPP503

DRAWFORM REVISION 25 AUGUST 2020

Autodesk Docs://20042 NBFAT 503 F35 Maintenance Hangar/20042 F35 Maint Hangar_OSF Shop Annex_FL-V2024.rvt
11/6/2025 3:21:54 PM

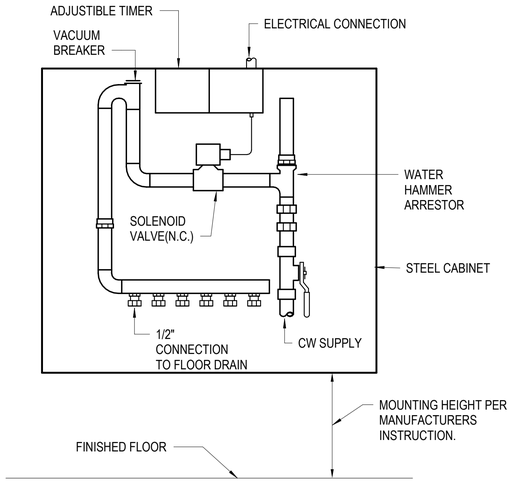

C1 TRAP PRIMER DETAIL
NOT TO SCALE

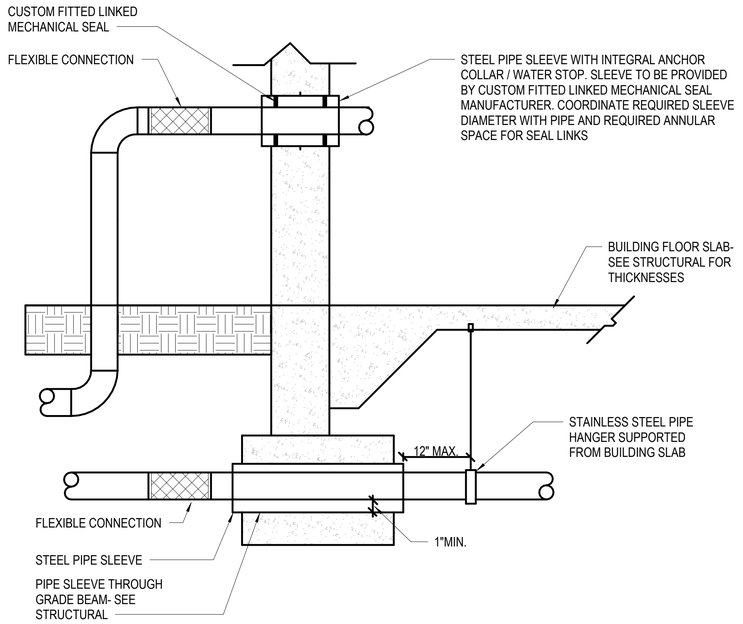

C4 SUPPORT DETAIL FOR PIPING SUPPORTED OFF OF BUILDING SLAB
NOT TO SCALE

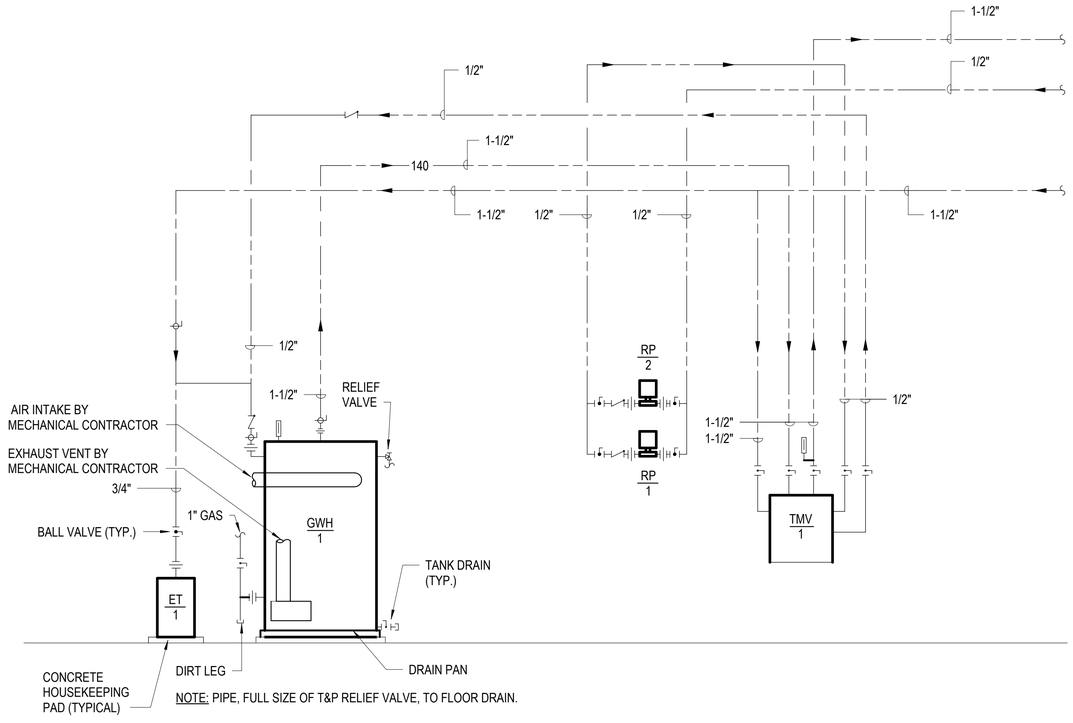

NOTE: PIPE, FULL SIZE OF T&P RELIEF VALVE, TO FLOOR DRAIN.

A1 DOMESTIC HOT WATER SCHEMATIC
NOT TO SCALE

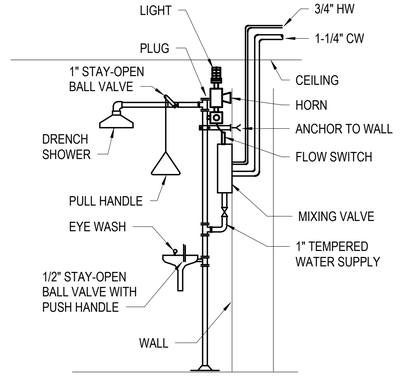

A4 EMERGENCY SHOWER & EYE WASH DETAIL
NOT TO SCALE

NOTE:
IF THIS DRAWING IS LESS THAN 34" X 22"
IT IS A REDUCED SIZE DRAWING

SYM	DESCRIPTION	DATE	APPR
1	MOD P00005	05/2023	
2	MOD P00006 AND MOD P00007	10/2025	

NAVFAC

JOHN EDWARD BALD LICENSE No 66893 STATE OF FLORIDA PROFESSIONAL ENGINEER
SEAL

BAMFORTH ENGINEERS + SURVEYORS
A/E INFO

APPROVED
FOR COMMANDER NAVFAC 11/21/2025

ACTIVITY
Approved by J. Scott Roberts, Asset Management Branch Head & Supervisory Facility Planner, PWD Beaufort, SC via email.

SATISFACTORY TO DATE	12/15/2022
DES CRF DRW HES CHK DSR	
PM/DM	KTB / RLH
BRANCH MANAGER	ALG
CHIEF ENG/ARCH	EJA
FP ENGINEER	DSN

DEPARTMENT OF THE NAVY
NAVAL FACILITIES ENGINEERING SYSTEMS COMMAND
NAVAL FACILITIES ENGINEERING SYSTEMS COMMAND ~ MID-ATLANTIC
NORFOLK, VA
DC CORE
MCAS BEAUFORT
BEAUFORT, SC
P-475 AIRCRAFT MAINTENANCE HANGAR - VOLUME 3 (OSF OPTION)
PLUMBING DETAILS

SCALE:	NOT TO SCALE
EPROJECT NO.:	1363603
CONSTR. CONTR. NO.	
NAVFAC DRAWING NO.	12860199
SHEET	998 OF 1412

OPP504

DRAWFORM REVISION: 25 AUGUST 2020

Autodesk Docs://2024 VMFAT 502 F35 Maintenance Hangar/2024 F35 Maint Hangar_OSF Shop Annex_PL-V2024.rvt
11/6/2025 3:21:55 PM

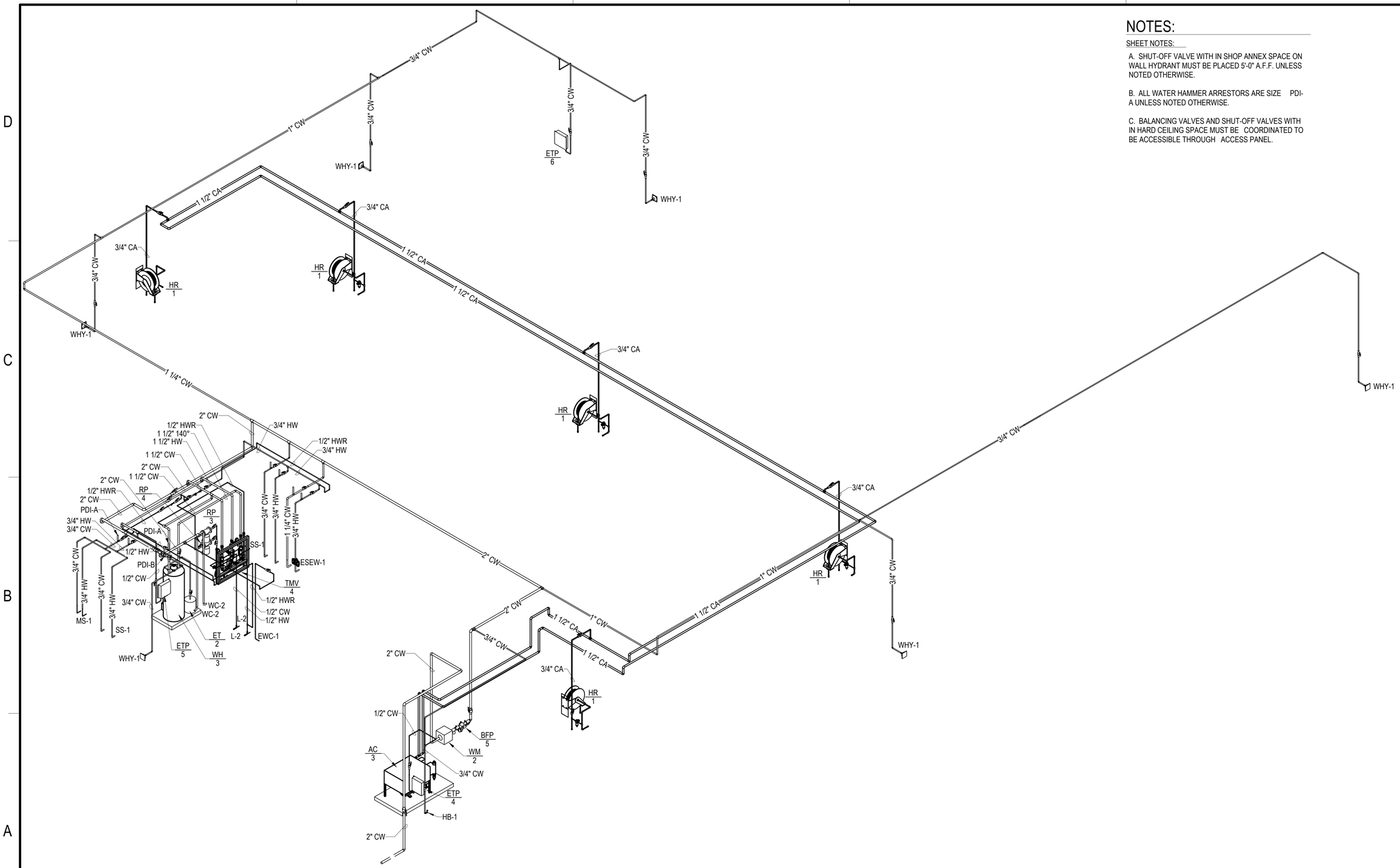

NOTES:

SHEET NOTES:

A. SHUT-OFF VALVE WITH IN SHOP ANNEX SPACE ON WALL HYDRANT MUST BE PLACED 5'-0" A.F.F. UNLESS NOTED OTHERWISE.

B. ALL WATER HAMMER ARRESTORS ARE SIZE PDI-A UNLESS NOTED OTHERWISE.

C. BALANCING VALVES AND SHUT-OFF VALVES WITH IN HARD CEILING SPACE MUST BE COORDINATED TO BE ACCESSIBLE THROUGH ACCESS PANEL.

A1 WATER AND COMPRESSED AIR - RISER DIAGRAM

NOT TO SCALE

NOTE:
IF THIS DRAWING IS LESS THAN 34" X 22"
IT IS A REDUCED SIZE DRAWING

SYM	DESCRIPTION	DATE	APPR
1	MOD P00005	05/2023	
2	MOD P00006 AND MOD P00007	10/2025	

NAVFAC

JOHN EDWARD BALD
LICENSE
No 66893
STATE OF FLORIDA
PROFESSIONAL ENGINEER
SEAL

BAMFORTH
ENGINEERS + SURVEYORS
AE INFO

APPROVED
FOR COMMANDER NAVFAC 11/21/2025

ACTIVITY
Approved by J. Scott Roberts, Asset Management Branch Head & Supervisory Facility Planner, PWD Beaufort, SC via email.

SATISFACTORY TO DATE	12/15/2022		
DES CRF	DRW HES	CHK DSR	
PM/DM	KTB / RLH		
BRANCH MANAGER	ALG		
CHIEF ENG/ARCH	EJA		
FP ENGINEER	DSN		

DEPARTMENT OF THE NAVY
NAVAL FACILITIES ENGINEERING SYSTEMS COMMAND
NAVAL FACILITIES ENGINEERING SYSTEMS COMMAND ~ MID-ATLANTIC
NORFOLK, VA
DC CORE
MCAS BEAUFORT
BEAUFORT, SC
P-475 AIRCRAFT MAINTENANCE HANGAR - VOLUME 3 (OSF OPTION)
WATER AND COMPRESSED AIR - RISER DIAGRAM

SCALE:
EPROJECT NO.: 1363603
CONSTR. CONTR. NO.
NAVFAC DRAWING NO. 12860200
SHEET 999 OF 1412
OPP601

DRAWFORM REVISION: 25 AUGUST 2020

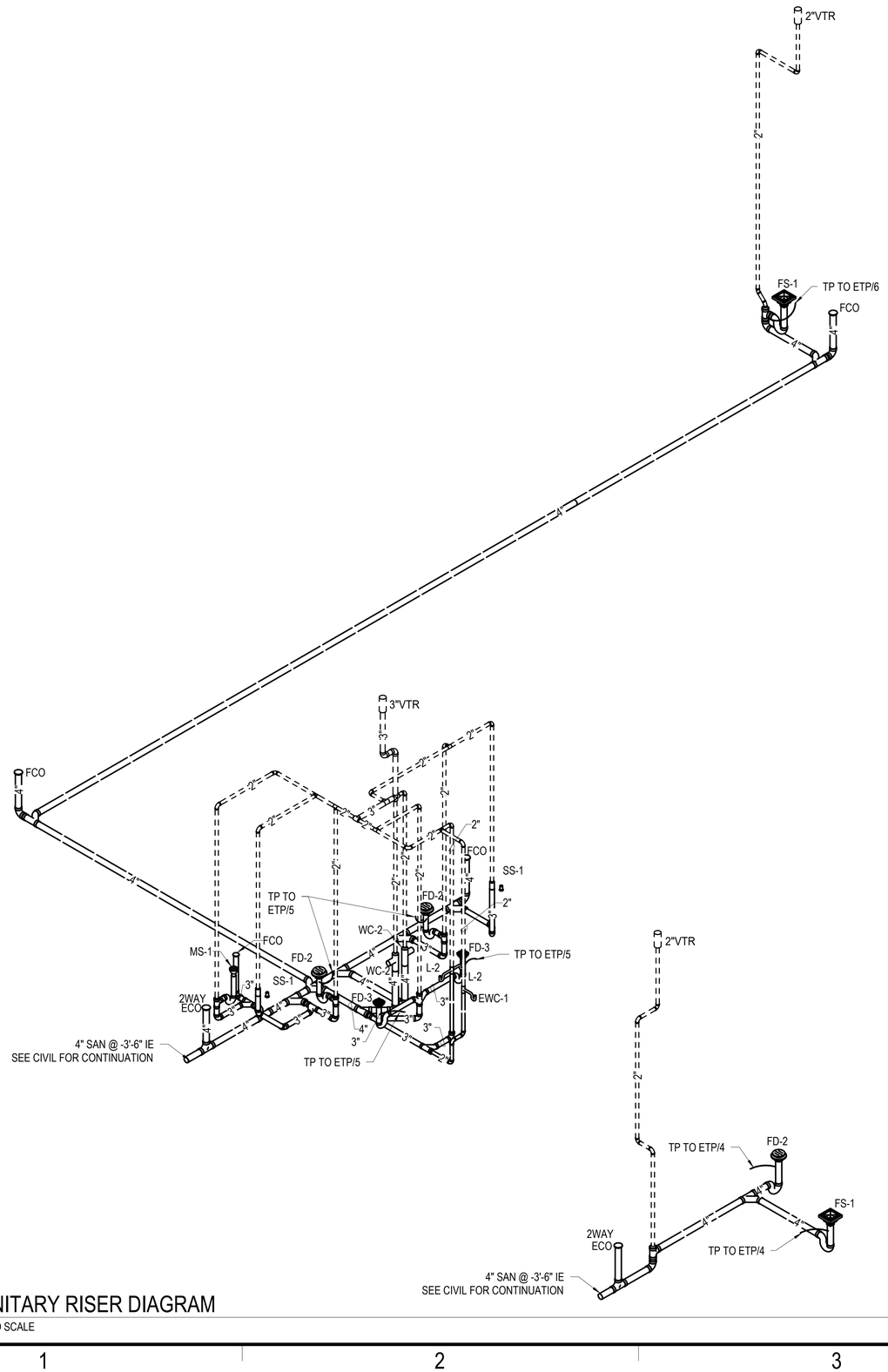

A1 SANITARY RISER DIAGRAM
NOT TO SCALE

NOTE:
IF THIS DRAWING IS LESS THAN 34" X 22"
IT IS A REDUCED SIZE DRAWING

SYM	DESCRIPTION	DATE	APPR
1	MOD P00005	05/2023	
2	MOD P00006 AND MOD P00007	10/2025	

NAVFAC

JOHN EDWARD BAMFORTH
LICENSE
No 56893
STATE OF FLORIDA
PROFESSIONAL ENGINEER
SEAL

BAMFORTH
ENGINEERING & SURVEYING

A/E INFO

APPROVED
FOR COMMANDER NAVFAC 11/21/2025
ACTIVITY
Approved by J. Scott Roberts,
Asset Management Branch Head &
Supervisory Facility Planner, PWD
Beaufort, SC via email.

SATISFACTORY TO DATE	12/15/2022
DES CRF / DRW HES / CHK DSR	
PM/DM	KTB / RLH
BRANCH MANAGER	ALG
CHIEF ENG/ARCH	EJA
FP ENGINEER	DSN

DEPARTMENT OF THE NAVY
NAVAL FACILITIES ENGINEERING SYSTEMS COMMAND
DC/CORE
NAVAL FACILITIES ENGINEERING SYSTEMS COMMAND – MID-ATLANTIC
NORFOLK, VA
MCAS BEAUFORT
BEAUFORT, SC
P-475 AIRCRAFT MAINTENANCE HANGAR - VOLUME 3 (OSF OPTION)
SANITARY - RISER DIAGRAM

SCALE:
EPROJECT NO.: 1363603
CONSTR. CONTR. NO.
NAVFAC DRAWING NO.
12860201
SHEET 1000 OF 1412

OPP602

DRAWFORM REVISION: 25 AUGUST 2020

Autodesk Docs://20042 MAFAT 502 FS Maintenance Hangar/20042 FS Maint Hangar_OSF Shop Annex_PL.rvt
11/6/2025 3:22:00 PM

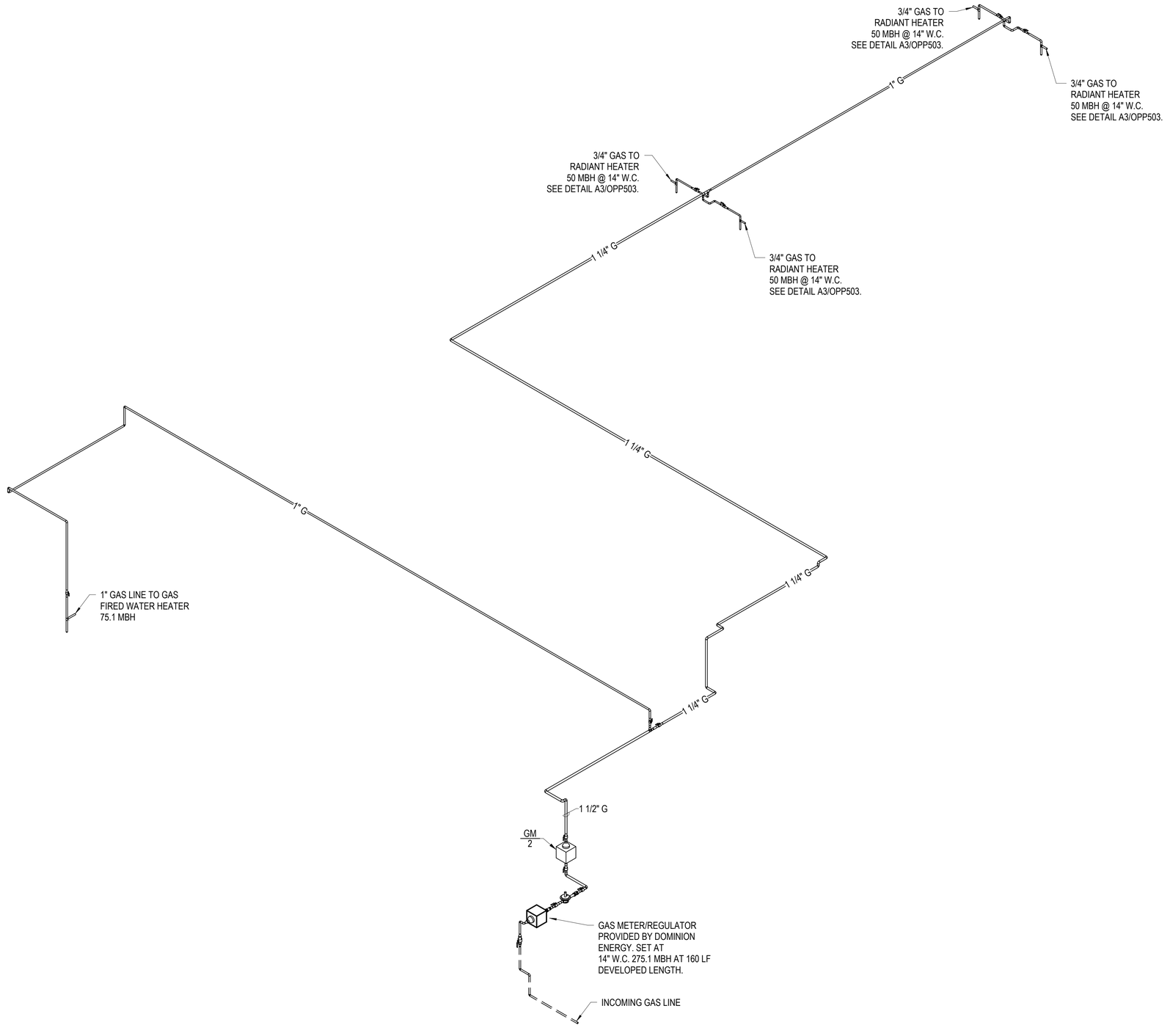

A1 NATURAL GAS - RISER DIAGRAM
NOT TO SCALE

NOTE:
IF THIS DRAWING IS LESS THAN 34" X 22"
IT IS A REDUCED SIZE DRAWING

SYM	DESCRIPTION	DATE	APPR
1	MOD P00005	05/2023	
2	MOD P00006 AND MOD P00007	10/2025	

NAVFAC

JOHN EDWARD BAMFORTH
LICENSE
No 56893
STATE OF FLORIDA
PROFESSIONAL ENGINEER
SEAL

BAMFORTH
ENGINEERS & SURVEYORS
AE INFO

APPROVED
FOR COMMANDER NAVFAC 11/21/2025

ACTIVITY
Approved by J. Scott Roberts,
Asset Management Branch Head &
Supervisory Facility Planner, PWD
Beaufort, SC via email.

SATISFACTORY TO DATE	12/15/2022
DES CRF / DRW HES / CHK DSR	
PM/DM	KTB / RLH
BRANCH MANAGER	ALG
CHIEF ENG/ARCH	EJA
FP ENGINEER	DSN

DEPARTMENT OF THE NAVY
NAVAL FACILITIES ENGINEERING SYSTEMS COMMAND
DC CORE

NAVAL FACILITIES ENGINEERING SYSTEMS COMMAND – MID-ATLANTIC
NORFOLK, VA

MCAS BEAUFORT
BEAUFORT, SC

P-475 AIRCRAFT MAINTENANCE HANGAR - VOLUME 3 (OSF OPTION)

NATURAL GAS - RISER DIAGRAM

SCALE:
EPROJECT NO.: 1363603
CONSTR. CONTR. NO.
NAVFAC DRAWING NO. 12860202
SHEET 1001 OF 1412

OPP603

DRAWFORM REVISION: 25 AUGUST 2020

Autodesk Docs://20042 MFAT 500 F36 Maintenance Hangar/20042 F35 Maint Hangar_OSF Shop Annex_PL.rvt2024.rvt
11/6/2025 3:22:01 PM

PLUMBING FIXTURE SCHEDULE

FIXTURE	DESCRIPTION	SANITARY OR WASTE	CW	HW	REMARKS
ESEW-1	EMERGENCY SHOWER AND EYEWASH	-	1-1/4"	3/4"	PROVIDE THERMOSTATIC MIXING VALVE WITH COLD WATER BYPASS (TMV/2).
EWC-1	ELECTRIC WATER COOLER	2"	1/2"	-	HFC R-134a REFRIGERANT, ELECTRIC TYPE WITH SENSOR ACTIVATED BOTTLE FILLER.
FD-2	FLOOR DRAIN	3"	-	-	-
FD-3	FLOOR DRAIN W/ SQUARE STRAINER	3"	-	-	-
FS-1	FLOOR SINK	4"	-	-	-
HB-1	HOSE BIBB	-	3/4"	-	-
L-2	LAVATORY	2"	1/2"	1/2"	PROVIDE THERMOSTATIC MIXING VALVE (TMV/3)
MS-1	MOP SINK	3"	3/4"	3/4"	-
SS-1	SERVICE SINK	3"	3/4"	3/4"	-
WC-2	WATER CLOSET (ADA)	4"	1-1/4"	-	-
WHY-1	WALL HYDRANT	-	3/4"	-	-

NOTE: PROVIDE TEMPERATURE LIMITING DEVICE THAT CONFORMS TO ASSE 1070/ASME A112.1070/CSA B125.70. TEMPERATURE TO FIXTURE SHALL NOT EXCEED 110F FOR ALL FIXTURES RECEIVING TEMPERED WATER.

NATURAL GAS METER SCHEDULE

MARK	LOCATION	SIZE	FLOW (CFH)	MAXIMUM PRESSURE LOSS (W.C.)	REMARKS
GM/2	O109 MECH	1-1/2"	275.1	1/2"	SECONDARY GAS METER TO BE CONNECTED TO BAS SYSTEM.

WATER METER SCHEDULE

MARK	LOCATION	SYSTEM	SIZE	FLOW (GPM)	MAXIMUM PRESSURE LOSS (PSIG)	REMARKS
WM/2	O109 MECH	DOMESTIC WATER	2"	50	3.3	METER MUST BE CONNECTED TO BAS SYSTEM.

ELECTRONIC TRAP PRIMER SCHEDULE

MARK	LOCATION	NUMBER OF TRAPS PRIMED	CONNECTION SIZE	VOLTAGE	CYCLE (Hz)	PHASE	REMARKS
ETP/4	O109 MECH	2	1/2	120	60	1	-
ETP/5	O105 JAN	4	1/2	120	60	1	-
ETP/6	O110 FP	1	1/2	120	60	1	-

BACKFLOW PREVENTER SCHEDULE

MARK	SYSTEM	LOCATION	SIZE	FLOW (GPM)	MAXIMUM PRESSURE LOSS (PSI)	REMARKS
BFP/5	DOMESTIC WATER	O109 MECH	2"	50	6	-

EXPANSION TANK SCHEDULE

MARK	SYSTEM	LOCATION	TYPE	TANK VOLUME (GAL)	ACCEPTANCE VOLUME (GAL)	HEIGHT	DIAMETER	CONNECTION SIZE	REMARKS
ET/2	DOMESTIC HOT WATER	O105 JAN	DIAPHRAGM	2.1	0.9	10"	10"	3/4"	-

THERMOSTATIC MIXING VALVE SCHEDULE

MARK	SYSTEM	LOCATION	TYPE	INLET TEMP. (°F)	OUTLET TEMP. (°F)	DESIGN FLOW (GPM)	MAX. PRESSURE LOSS @ DESIGN FLOW (PSI)	INLET SIZE (INCH)	OUTLET SIZE (INCH)	REMARKS
TMV/2	DOMESTIC HOT WATER	O102	MECHANICAL	131	85	20	15	3/4"	1"	-
TMV/3	DOMESTIC HOT WATER	LAVATORY	MECHANICAL	131	110	3	10	1/2	1/2	-
TMV/4	DOMESTIC HOT WATER	O105 JAN	DIGITAL	140	131	12	5	1-1/2	1-1/2	-

RECIRCULATION PUMP SCHEDULE

MARK	SYSTEM	LOCATION	FLOW (GPM)	OPERATING HEAD (PSI)	SHUT-OFF HEAD (PSI)	HP	RPM	VOLTAGE	CYCLE (Hz)	PHASE	REMARKS
RP/3	DOMESTIC HOT WATER RETURN	O105 JAN	1	30	36	1/6	3500	120	60	1	-
RP/4	DOMESTIC HOT WATER RETURN	O105 JAN	1	30	36	1/6	3500	120	60	1	-

AIR COMPRESSOR SCHEDULE

MARK	LOCATION	SYSTEM	COMPRESSOR CAPACITY (SCFM)	MAX. DISCHARGE PRESS. (PSIG)	TANK CAPACITY	RATED OUTPUT	RPM	VOLTAGE	PHASE	CYCLE (Hz)	NOISE LEVEL (dB)	FLA	MCA(A)	MOCP(A)	REMARKS
AC/3	N-109 MECH	COMPRESSED AIR	55	175	120 GAL	15 HP	3530	208	3	60	67	21 A	10 A	40 A	VARIABLE FREQUENCY DRIVE (VFD) SYSTEM

HOSE REEL SCHEDULE

MARK	SYSTEM	REMARKS
HR-1	COMPRESSED AIR	3/4" CA DROP PROVIDED WITH SPRING RETRACTABLE HOSE REEL WITH 100' OF 1/2" HOSE PNEUMATIC RATED FOR 300 PSI AND HOSE GUIDE.

GAS FIRED WATER HEATER SCHEDULE

MARK	SYSTEM	LOCATION	INPUT RATING (BTUH)	OUTPUT RATING (BTUH)	TANK CAPACITY (GAL)	DESIGN ENTERING WATER TEMP (F)	EXITING WATER TEMP (F)	WATER INLET / OUTLET SIZE	GAS CONNECTION SIZE	VOLTAGE	CYCLE (Hz)	PHASE	EFFICIENCY (MINIMUM)	MIN. RECOVERY @ 78°F RISE (GPH)	VENT DIA.	INTAKE DIA.	REMARKS
WH/3	DOMESTIC HOT WATER	O105 JAN	75,100	60,080	75	62	140	1-1/2"	3/4"	120	60	1	80	94	3	3	PROVIDE NEUTRALIZATION KIT

NOTE:
IF THIS DRAWING IS LESS THAN 34" X 22"
IT IS A REDUCED SIZE DRAWING

SYM	DESCRIPTION	DATE	APPR
1	MOD P00005	05/2023	
2	MOD P00006 AND MOD P00007	10/2025	

NAVFAC

JOHN EDWARD BALL — LICENSE — No 56893 — STATE OF FLORIDA — PROFESSIONAL ENGINEER — SEAL

BAMFORTH ENGINEERS & ARCHITECTS — AE INFO

APPROVED

FOR COMMANDER NAVFAC 11/21/2025

ACTIVITY: Approved by J. Scott Roberts, Asset Management Branch Head & Supervisory Facility Planner, PWD Beaufort, SC via email.

SATISFACTORY TO DATE 12/15/2022

DES	CRF	DRW	HES	CHK	DSR
PM/DM					KTB / RLH
BRANCH MANAGER					ALG
CHIEF ENG/ARCH					EJA
FP ENGINEER					DSN

DEPARTMENT OF THE NAVY
NAVAL FACILITIES ENGINEERING SYSTEMS COMMAND
DC CORE

NAVAL FACILITIES ENGINEERING SYSTEMS COMMAND - MID-ATLANTIC
NORFOLK, VA

MCAS BEAUFORT
BEAUFORT, SC
P-475 AIRCRAFT MAINTENANCE HANGAR - VOLUME 3 (OSF OPTION)

PLUMBING SCHEDULES

SCALE:

EPROJECT NO.: 1363603

CONSTR. CONTR. NO.

NAVFAC DRAWING NO.
12660203

SHEET 1002 OF 1412

OPP801

DRAWFORM REVISION 25 AUGUST 2020

Autodesk Docs://20042 MEAF 502 F36 Maintenance Hangar/20042 F36 Maint Hangar_OSF Shop Annex_PL_V2024.rvt
11/6/2025 3:22:02 PM