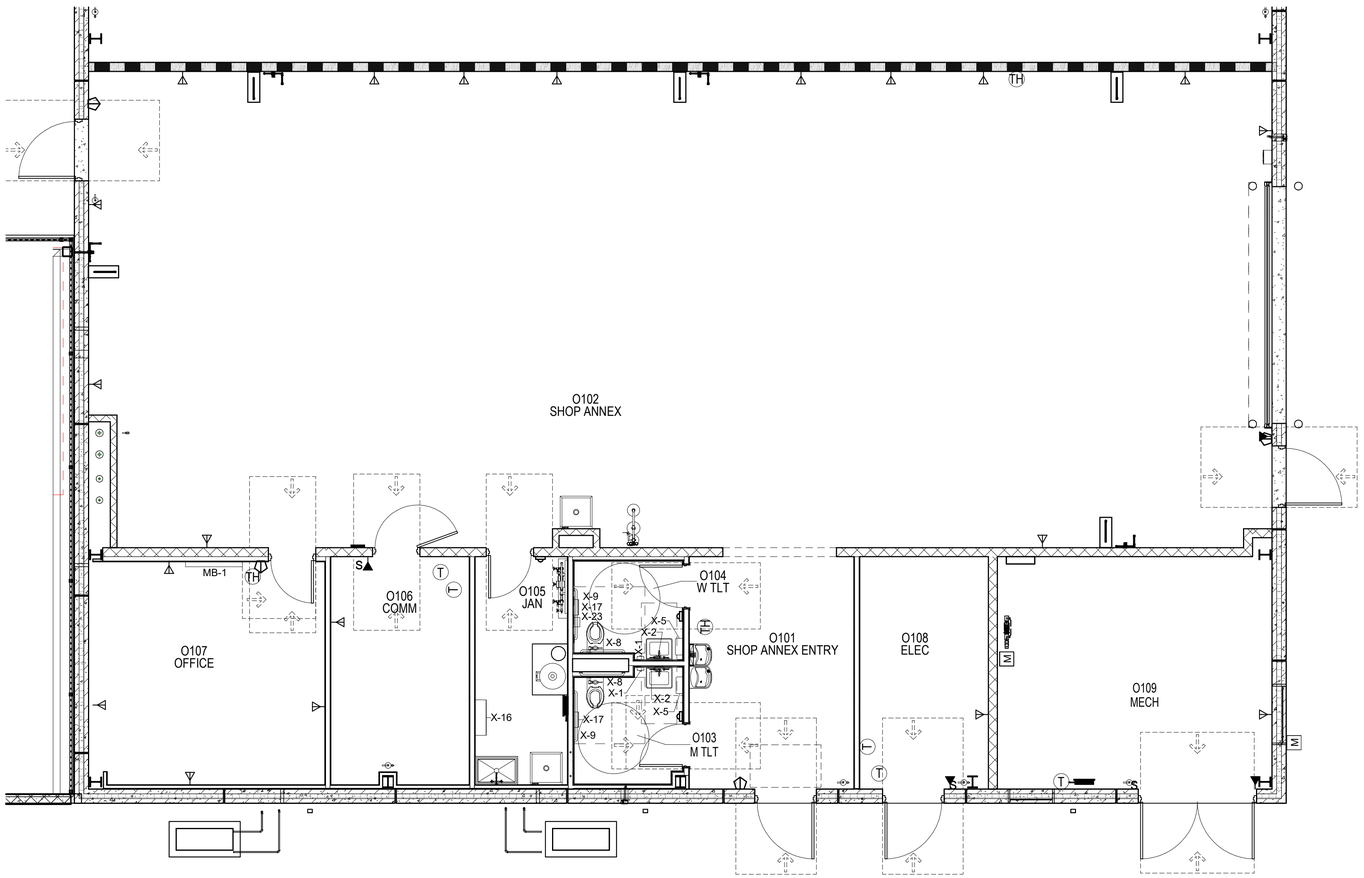

A1 OSF / SHOP ANNEX - EQUIPMENT PLAN - GROUND FLOOR - SECTOR B

3/16" = 1'-0"

NOTES:

SHEET NOTES:

A REFER TO SHEET OIF601 FOR EQUIPMENT SCHEDULE.

B ALL ACCESSIBLE TOILET ROOMS OR STALLS MUST MAINTAIN 5'-0" MINIMUM CLEARANCE FROM TOILET SIDE WALL TO SIDE EDGE OF LAVATORY OR SINK CABINET.

C PAINT WALLS BEFORE EQUIPMENT INSTALLATION.

EQUIPMENT LEGEND - CATEGORY A

MB-1	MARKER BOARD
X-1	DISPENSER, SOAP, DISPOSABLE
X-2	MIRROR, FLOAT GLASS, WITH STAINLESS STEEL (SS) FRAME
X-5	DISPENSER, PAPER TOWEL, SENSOR, HANDS FREE
X-8	GRAB BAR, 1-1/4" Dia., SS, SINGLE WALL, WC ACCESSIBLE, 24"
X-9	GRAB BAR, 1-1/4" Dia., SS, SINGLE WALL, WC ACCESSIBLE, 42"
X-16	SHELF, UTILITY W/ MOP/BROOM HOLDERS, SS, SURFACE MOUNTED
X-17	DISPENSER, TOILET TISSUE, SS, 2-ROLL, SURFACE MOUNTED
X-23	DISPOSAL, SANITARY NAPKIN, SS, SURFACE MOUNTED

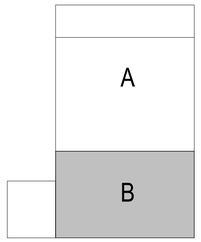

KEYPLAN

0 1' 5' 10' 15' 20'

3/16" = 1'-0" GRAPHIC SCALE

NOTE:
IF THIS DRAWING IS LESS THAN 34" X 22"
IT IS A REDUCED SIZE DRAWING

SYM	DESCRIPTION	DATE	APPR
1	MOD P00005	05/2023	
2	MOD P00006 AND MOD P00007	10/2025	

NAVFAC

STATE OF FLORIDA
BILLY KEITH HOLLOWAY
AR93022
REGISTERED ARCHITECT
12/13/23
SEAL

BAMFORTH
CONSULTING ENGINEERS

AE INFO

APPROVED
FOR COMMANDER NAVFAC 11/21/2025

ACTIVITY: Approved by J. Scott Roberts, Asset Management Branch Head & Supervisory Facility Planner, PWD Beaufort, SC via email.

SATISFACTORY TO DATE 12/15/2022

DES	KLB	DRW AAS	CHK ROD
PM/DM	KTB / RLH		
BRANCH MANAGER	CGM		
CHIEF ENG/ARCH	EJA		
FP ENGINEER	DSN		

DEPARTMENT OF THE NAVY
NAVAL FACILITIES ENGINEERING SYSTEMS COMMAND
DC CODE: NAVAL FACILITIES ENGINEERING SYSTEMS COMMAND – MID-ATLANTIC NORFOLK, VA
MCAS BEAUFORT
BEAUFORT, SC

P-475 AIRCRAFT MAINTENANCE HANGAR - VOLUME 3 (OSF OPTION)

OSF / SHOP ANNEX - EQUIPMENT PLAN - GROUND FLOOR - SECTOR B

SCALE: As indicated

EPROJECT NO.: 1363603

CONSTR. CONTR. NO.

NAVFAC DRAWING NO. 12860179

SHEET 978 OF 1412

OQJ101B

DRAWFORM REVISION: 25 AUGUST 2020

Autodesk Docs://20042 MIRAF 502 F35 Maintenance Hangar/20042 F35 Maint Hangar_OSF Shop Annex.rvt
11/3/2025 9:01:11 PM

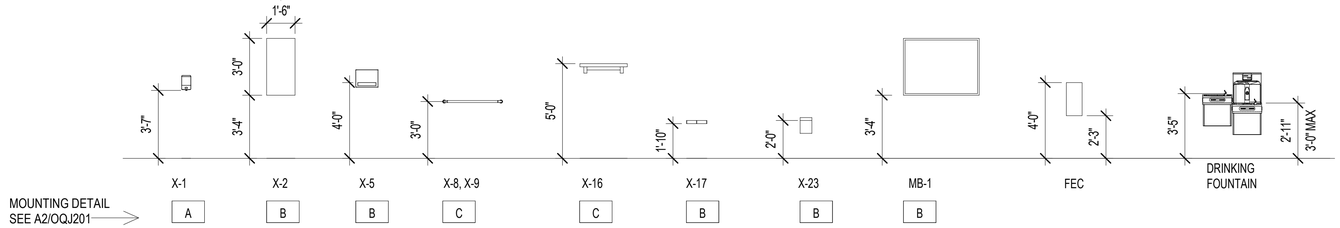

D2 EQ - TYPICAL MOUNTING HEIGHT

1/4" = 1'-0"

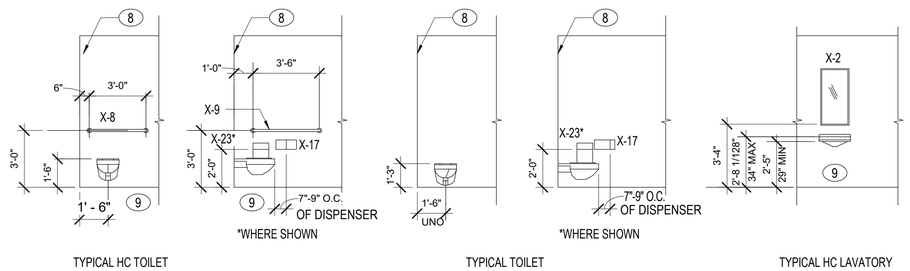

TYPICAL HC TOILET

TYPICAL TOILET

TYPICAL HC LAVATORY

C3 TYPICAL TOILET ROOM ELEVATIONS

1/4" = 1'-0"

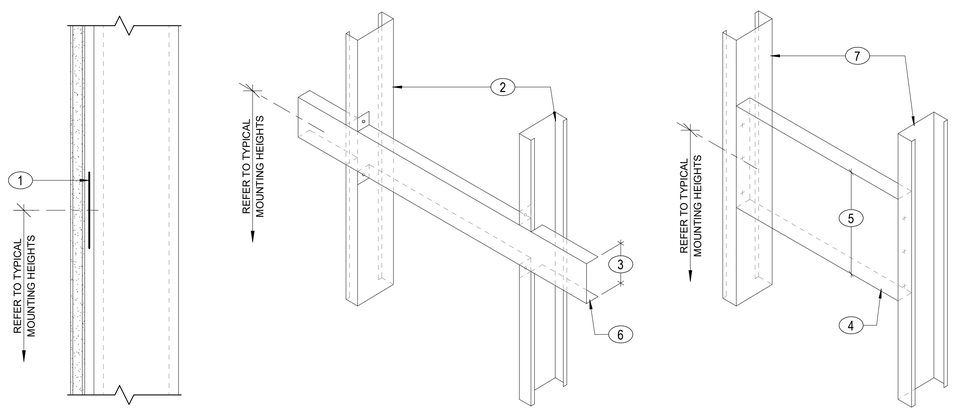

TYPE A **TYPE B** **TYPE C**

A2 ACCESSORY/EQUIPMENT MOUNTING DETAILS

3" = 1'-0"

NOTES:

SHEET NOTES:

A REFER TO A2/OQJ201 FOR EQUIPMENT BACKING DETAIL. DIMENSIONS INDICATED ARE FOR PLACEMENT ONLY. PROVIDE SHOP DRAWINGS FOR EACH ITEM OF EQUIPMENT TO INDICATE LOCATION OF EQUIPMENT BACKING.

B REFER TO SHEET OIF601 FOR EQUIPMENT AND CASEWORK SCHEDULE.

C ALL DIMENSIONS ARE AS SHOWN UNLESS NOTED OTHERWISE ON OTHER ROOM ELEVATIONS.

KEY NOTES (00)

1 CONT 20 GA 4" WIDE MTL BACKING PLATE.
2 WALL STUDS.
3 3 5/8" MIN, DEEPER IF REQUIRED.
4 14 GA STL RUNNER TRACK-CLIP FLANGES AND FOLD WEB TO FORM ATTACHMENT FLANGE.
5 8" MIN DEEPER IF REQUIRED.
6 20 GA MTL RUNNER TRACK-CLIP FLANGES TO FIT OVER STUDS.
7 MIN 20 GA MTL STUDS FACING OPPOSITE DIRECTIONS TO ALLOW MOUNTING PLATE ATTACHMENT.
8 FINISHED FACE OF PARTITION.
9 REFER TO PLUMBING DRAWINGS FOR P-TRAP COVERS.

0 2" 4" 8" 1'
3" = 1'-0" GRAPHIC SCALE

0 1' 5' 10' 15'
1/4" = 1'-0" GRAPHIC SCALE

NOTE:
IF THIS DRAWING IS LESS THAN 34" X 22"
IT IS A REDUCED SIZE DRAWING

SYM	DESCRIPTION	DATE	APPR
1	MOD P00005	05/2023	
2	MOD P00006 AND MOD P00007	10/2025	

NAVFAC

STATE OF FLORIDA
BILLY KEITH HOLLOWAY
AR93022
REGISTERED ARCHITECT
SEAL

BAMFORTH ENGINEERS + SURVEYORS

AE INFO

APPROVED
FOR COMMANDER NAVFAC 11/21/2025

ACTIVITY: Approved by J. Scott Roberts, Asset Management Branch Head & Supervisory Facility Planner, PWD Beaufort, SC via email.

SATISFACTORY TO DATE 12/15/2022

DES	KLB	DRW	MEC	CHK	ROD
PMDM					KTB / RLH
BRANCH MANAGER					CGM
CHIEF ENG/ARCH					EJA
FP ENGINEER					DSN

DEPARTMENT OF THE NAVY
NAVAL FACILITIES ENGINEERING SYSTEMS COMMAND ~ MID-ATLANTIC
NORFOLK, VA
DC CORE
MCAS BEAUFORT
BEAUFORT, SC
P-475 AIRCRAFT MAINTENANCE HANGAR - VOLUME 3 (OSF OPTION)
TYPICAL MOUNTING HEIGHTS

SCALE: As indicated
EPROJECT NO.: 1363603
CONSTR. CONTR. NO.
NAVFAC DRAWING NO. 12860180
SHEET 979 OF 1412

OQJ201

DRAWFORM REVISION: 26 AUGUST 2020

Autodesk Docs://20042 MFA/F 502 P25 Maintenance Hangar/20042 F25 Maint Hangar_OSF Shop Annex.rvt
1/15/2026 5:01:13 PM