20A 120V RECEPTACLE BRANCH CIRCUIT HOMERUN SCHEDULE

HOMERUN LENGTH	CONDUCTOR SIZE
0-50 FEET	#12 AWG COPPER
51-100 FEET	#10 AWG COPPER
101-150 FEET	#8 AWG COPPER

NOTES:

A. THE CONDUCTOR SIZES SHOWN ARE FOR THE PHASE, NUETRAL AND GROUND CONDUCTORS.
B. FINAL CONNECTIONS TO RECEPTACLES WILL BE #12 AWG COPPER MAXIMUM. PROVIDE JUNCTION BOX ABOVE FINISHED ACCESSIBLE CEILING AS CLOSE AS POSSIBLE TO THE RECEPTACLES SERVED FOR CONDUCTOR TRANSISTIONS.

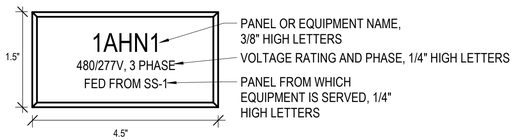

TYPICAL FOR:

1. PANELBOARDS
2. TRANSFORMERS
3. SWITCHBOARDS
4. SWITCHGEAR
5. MOTOR CONTROL CENTERS
6. LOAD INTERRUPTER SWITCHES
7. RELAY PANELS
8. CONTACTORS
9. CAPACITOR BANKS

COLOR CODE:

1. NORMAL: BLACK FACE WITH WHITE LETTERS

GENERAL NOTES:

A. PROVIDE LAMINATED PLASTIC NAMEPLATES FOR ALL EQUIPMENT ENCLOSURES AS INDICATED. NAMEPLATES WILL BE MELAMINE PLASTIC, 0.125 INCH THICK WITH FACE AND CORE COLORS AS INDICATED. SURFACE WILL HAVE A MATTE FINISH. CORNERS WILL BE SQUARE AND EDGES WILL BE BEVELED. ACCURATELY ALIGN LETTERING AND ENGRAVE INTO THE CORE.
B. NAME PLATE WIDTH WILL BE 4.5". PROVIDE ADDITIONAL LINES OF TEXT AND INCREASE HEIGHT OF PLATE AS REQUIRED.

B1 ELECTRICAL EQUIPMENT IDENTIFICATION LABEL DETAIL

NOT TO SCALE

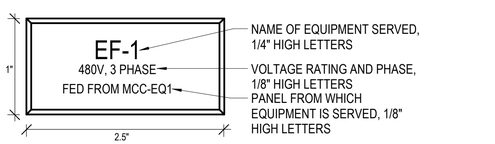

TYPICAL FOR:

1. DISCONNECT SWITCHES
2. ENCLOSED CIRCUIT BREAKERS
3. INDIVIDUAL MOTOR STARTERS
4. VARIABLE FREQUENCY DRIVES
5. STARTERS AND CONTROL PANELS PROVIDED WITH MECHANICAL EQUIPMENT

COLOR CODE:

1. NORMAL: BLACK FACE WITH WHITE LETTERS

GENERAL NOTES:

A. PROVIDE LAMINATED PLASTIC NAMEPLATES FOR ALL EQUIPMENT ENCLOSURES AS INDICATED. NAMEPLATES WILL BE MELAMINE PLASTIC, 0.125 INCH THICK WITH FACE AND CORE COLORS AS INDICATED. SURFACE WILL HAVE A MATTE FINISH. CORNERS WILL BE SQUARE AND EDGES WILL BE BEVELED. ACCURATELY ALIGN LETTERING AND ENGRAVE INTO THE CORE.
B. NAME PLATE WIDTH WILL BE 2 1/2". PROVIDE ADDITIONAL LINES OF TEXT AND INCREASE HEIGHT OF PLATE AS REQUIRED.

A1 MISCELLANEOUS ELECTRICAL EQUIPMENT LABEL DETAIL

NOT TO SCALE

CONDUIT AND CONDUCTORS

SYMBOL	DESCRIPTION
	BRANCH CIRCUIT WIRING IN CONDUIT. 1/2"C - 2#12 + 1#12 GND UON. PROVIDE ADDITIONAL SWITCHED CONDUCTORS OR TRAVELER CONDUCTORS FOR LIGHTING CIRCUITS AS REQUIRED TO SUPPORT THE INDICATED SWITCHING.
	HOMERUN TO PANELBOARD: 1ALN1 - 1,3,5 (CIRCUIT DESIGNATION. PANELBOARD DESIGNATION.)

LINE-VOLTAGE LIGHTING CONTROL DEVICES

SYMBOL	DESCRIPTION	MOUNTING
S	20A, 120/277V SINGLE POLE SWITCH, UON. SUBSCRIPTS INDICATE THE FOLLOWING: WP - WEATHERPROOF	48" AFF TO CENTER, UON
	LINE VOLTAGE, DUAL-TECHNOLOGY OCCUPANCY SENSOR.	96" AFF TO CENTER, UON

MISCELLANEOUS

SYMBOL	DESCRIPTION	MOUNTING
00	KEY NOTE SYMBOL.	NA
	ELECTRICAL GROUND	NA
	CONDUCTOR CONNECTION	NA
	POINT OF REMOVAL, DEMOLITION.	NA
	POINT OF CONNECTION, EXISTING TO NEW WORK.	NA

AIRCRAFT GROUNDING SYSTEM

SYMBOL	DESCRIPTION
AG2	AIRCRAFT GROUNDING RECEPTACLE AT SHADE STRUCTURE. SEE B2/ES505 FOR DETAIL.

SINGLE LINE DIAGRAM

SYMBOL	DESCRIPTION
1AHN1	PANELBOARD. WHEN ADDITIONAL SYMBOL(S) ARE INCLUDED, THEY INDICATE THE FOLLOWING: MAIN CIRCUIT BREAKER. SEE PANEL SCHEDULE FOR SIZE. IF NOT PRESENT, PANELBOARD WITH MAIN LUGS ONLY.
3P 100 A	CIRCUIT BREAKER WITH NUMBER OF POLES AND TRIP RATING AS INDICATED.
3P 100 A ETM S	ELECTRONIC TRIP BREAKER WITH INTEGRAL POWER MONITORING METER. NUMBER OF POLES AND TRIP RATING AS INDICATED. METERING IDENTIFICATION CODES AS FOLLOWS: S - SHADE STRUCTURES
	ADDITIONAL CIRCUIT BREAKER SUBSCRIPTS INDICATE THE FOLLOWING: ETM - SOLID STATE ELECTRONIC TRIP CIRCUIT BREAKER WITH INTEGRAL POWER METERING, BREAKER STATUS, AND FIELD ADJUSTABLE LONG TIME PICKUP, SHORT TIME PICKUP, SHORT TIME DELAY, AND INSTANTANEOUS TRIP FUNCTIONS. METERING AND STATUS SHALL BE CONNECTED TO THE POWER MONITORING SYSTEM VIA NETWORK CABLING. INCLUDE ADJUSTABLE GROUND FAULT PICKUP AND GROUND FAULT DELAY TRIP FUNCTIONS WHERE GROUND FAULT PROTECTION IS INDICATED.
200A	MEDIUM VOLTAGE SWITCH WITH RATING.
TC	MEDIUM VOLTAGE CIRCUIT BREAKER TRIP COIL.
52 100A	VACUUM CIRCUIT INTERRUPTER. SUBSCRIPT INDICATES TRIP RATING.
50/51	MICROPROCESSOR BASED OVERCURRENT RELAY.
	SURGE ARRESTOR WITH RATINGS AS INDICATED.
Y	POWER TRANSFORMER WITH DELTA CONNECTED PRIMARY, WYE CONNECTED SECONDARY AND RATING AS INDICATED.
	MEDIUM VOLTAGE TERMINATION.
600:5	(3) CURRENT TRANSFORMERS WITH RATING AS INDICATED.
SPD	PARALLEL CONNECTED SURGE PROTECTIVE DEVICE. SEE SURGE PROTECTIVE DEVICE SCHEDULE ON SHEET ES601.
	FEEDER CONTINUATION SYMBOL
1	FEEDER REFERENCE
ES602	SHEET ON WHICH FEEDER IS CONTINUED
1AHNDP	EQUIPMENT OR PANEL TO WHICH FEEDER IS CONNECTED

SITE ELECTRICAL LEGEND

SYMBOL	DESCRIPTION
MH-E-1	ELECTRICAL MANHOLE. SEE C3/ES502 FOR DETAIL. SUBSCRIPT INDICATES THE FOLLOWING: MH-E -1 — MANHOLE SEQUENCE NUMBER; SERVICE IDENTIFICATION: P - PRIMARY POWER, S - SECONDARY POWER, F - FEEDER, PV - PHOTOVOLTAIC
EMH1	EXISTING MANHOLE. SUBSCRIPT INDICATES THE MANHOLE NUMBER.
HH	HANDHOLE. SEE A5/ES502 FOR DETAIL.
HH	EXISTING HANDHOLE
	PAD MOUNTED TRANSFORMER. SHADED PORTION INDICATES THE FRONT. SEE B3/ES501 FOR PAD DETAIL.
	PAD MOUNTED SWITCH. SEE B4/ES503 FOR PAD DETAIL.
	EXISTING PAD MOUNTED SWITCH.
E-1	UNDERGROUND PRIMARY DUCT BANK. SEE DUCT BANK SCHEDULES ON SHEET ES100 FOR REQUIREMENTS. E - 1 — DUCT BANK SEQUENCE NUMBER; SERVICE IDENTIFICATION: P - PRIMARY POWER, S - SECONDARY POWER, E - EMERGENCY POWER, G - GENERATOR CONTROLS, F - FEEDERS, PV - PHOTOVOLTAIC
EUL	EXISTING UNDERGROUND LIGHTING CIRCUIT TO REMAIN (480V SINGLE PHASE)
EUP	EXISTING UNDERGROUND PRIMARY DUCT BANK TO REMAIN (12.47KV)
EUE	EXISTING UNDERGROUND ELECTRICAL DUCT BANK TO REMAIN
EUS	EXISTING UNDERGROUND SECONDARY DUCT BANK TO REMAIN
EOP	EXISTING OVERHEAD PRIMARY TO REMAIN
EOL	EXISTING OVERHEAD LIGHTING CIRCUIT TO REMAIN
-X--DUP-X-	REMOVE UNDERGROUND PRIMARY DUCT BANK (12.47KV)
-X--DUL-X-	REMOVE UNDERGROUND LIGHTING CIRCUIT (480V SINGLE PHASE)
-X--DUS-X-	REMOVE UNDERGROUND SECONDARY DUCT BANK
-X--DOL-X-	REMOVE OVERHEAD LIGHTING CIRCUIT
-X--DUE-X-	REMOVE UNDERGROUND ELECTRICAL DUCT BANK
-X--DFE-X-	REMOVE ELECTRICAL CONDUITS AND CIRCUITS MOUNTED ON RESTRICTED AREA SECURITY FENCE.
	2-WAY DUCT BANK. SEE A2/ES503 FOR DUCTBANK DETAIL AND C2/ES503 FOR REINFORCED DUCTBANK DETAIL.
	4-WAY DUCT BANK. SEE A4/ES504 FOR DUCTBANK DETAIL AND C4/ES504 FOR REINFORCED DUCTBANK DETAIL.
	6-WAY DUCT BANK. SEE A2/ES504 FOR DUCTBANK DETAIL AND C2/ES504 FOR REINFORCED DUCTBANK DETAIL.
	8-WAY DUCT BANK. SEE A2/ES505 FOR DETAIL.
	12-WAY DUCT BANK. SEE A1/ES501 FOR REINFORCED DUCTBANK DETAIL.
	DUCT BANK SECTION LOOKING IN THE DIRECTION OF ARROWS; BLANK INDICATES SPARE DUCT; NUMERAL INDICATES NEW CABLE DESIGNATION. SEE DUCT BANK FEEDER CONDUCTOR SCHEDULE ON SHEET ES100. HEAVY LINE INDICATES BOTTOM OF THE DUCT BANK
	EXISTING OVERHEAD POWER POLE.
	EXISTING GUY WIRE

SITE LIGHTING

SYMBOL	DESCRIPTION
	EXISTING POLE MOUNTED AREA LUMINAIRE, SINGLE HEAD.
	EXISTING POLE MOUNTED AREA LUMINAIRE DOUBLE HEAD.
	WALL MOUNTED LUMINAIRE
	POLE MOUNTED AREA LUMINAIRE, SINGLE HEAD.
	FLOOD LIGHT
UL1	UNDERGROUND LIGHTING CIRCUIT. BURY AT 24" BFG UNLESS OTHERWISE NOTED. UL1 - 1"C - 2#10 + 1#10 GND; UL2 - 1"C - 2#8 + 1#8 GND
SL	SITE LIGHTING HANDHOLE. SEE A5/ES502 FOR DETAIL.

GENERAL NOTES

A. LUMINAIRE TYPES INDICATED AS FOLLOWS: UPPER CASE LETTER WITH NUMERAL DENOTES FIXTURE TYPE (SEE LUMINAIRE SCHEDULE), LOWER CASE LETTER (IF SHOWN) DENOTES SWITCHING ARRANGEMENT.
B. ALL MATERIALS AND EQUIPMENT WILL BE LISTED AS COMPLYING WITH THE APPLICABLE STANDARDS OF UNDERWRITER'S LABORATORIES, INC OR OTHER APPROVED LISTING AGENCIES.
C. CONDUCTOR AMPACITIES ARE BASED ON 60° C COPPER FOR #12 AWG THROUGH #1 AWG CONDUCTORS. CONDUCTOR AMPACITIES ARE BASED ON 75° C COPPER FOR CONDUCTORS LARGER THAN #1 AWG.
D. ALL CONDUIT SIZES ARE BASED ON ELECTRICAL METALLIC TUBING (EMT) WITH TYPE THHN/THWN COPPER CONDUCTORS. ADJUST CONDUIT SIZE AS REQUIRED FOR OTHER CONDUIT MATERIALS AND CONDUCTOR TYPES.
E. THE PANELBOARD, SWITCHBOARD AND SWITCHGEAR SUPPLIER IS RESPONSIBLE FOR PROVIDING OVERCURRENT PROTECTIVE DEVICES THAT ARE SELECTIVELY COORDINATED. REFER TO SPECIFICATION SECTION 26 28 01.00 10 FOR REQUIREMENTS.
F. PROVIDE SEPARATE NEUTRAL CONDUCTOR FOR EACH 277V AND 120V BRANCH CIRCUIT, UON. MULTIPLE 20A BRANCH CIRCUITS FROM THE SAME PANELBOARD MAY BE COMBINED IN A SINGLE 1/2" CONDUIT HOME RUN, MAXIMUM OF (3) CIRCUIT PER HOME RUN.
G. REFER TO SHEET EG001 FOR EQUIPMENT IDENTIFICATION LABEL DETAILS.

ABBREVIATIONS

A	AMPERES	JB	JUNCTION BOX
AFC	ABOVE FINISHED CEILING	KAIC	KILO-AMPERES INTERRUPTING CAPACITY
AFF	ABOVE FINISHED FLOOR		
AFG	ABOVE FINISHED GRADE	KV	KILO-VOLTS
AHU	AIR HANDLING UNIT	KVA	KILO-VOLTS-AMPERES
AIC	AMPERES INTERRUPTING CAPACITY	KVAR	KILO-VOLTS-AMPERES REACTIVE
ATS	AUTOMATIC TRANSFER SWITCH	KW	KILO-WATTS
AWG	AMERICAN WIRE GAUGE	KWH	KILO-WATT-HOURS
BFC	BELOW FINISHED CEILING	LAN	LOCAL AREA NETWORK
BFG	BELOW FINISHED GRADE	LED	LIGHT-EMITTING DIODE
C	CONDUIT	LTG	LIGHTING
CAB	CABINET	m	METER
CATV	CABLE TELEVISION	mm	MILLIMETER
CCTV	CLOSED CIRCUIT TELEVISION	MAX	MAXIMUM
CH	CHILLER	MCB	MAIN CIRCUIT BREAKER
CKT	CIRCUIT	MCC	MOTOR CONTROL CENTER
CL	CENTERLINE	MCP	MOTOR CIRCUIT PROTECTOR
CLG	CEILING	MFR	MANUFACTURER
CT's	CURRENT TRANSFORMERS	MIN	MINIMUM
CU	COPPER	MISC	MISCELLANEOUS
DISC	DISCONNECT(ING)	MTR	MOTOR
DWG	DRAWING(S)	MTD	MOUNTED
EA	EACH	MTG	MOUNTING
EF	EXHAUST FAN	MTS	MANUAL TRANSFER SWITCH
EMT	ELECTRICAL METALLIC TUBING	N.C.	NORMALLY CLOSED
EQUIP	EQUIPMENT	N.O.	NORMALLY OPEN
EUH	ELECTRIC UNIT HEATER	NA	NOT APPLICABLE
EWC	ELECTRIC WATER COOLER	NC	NURSE CALL
EWH	ELECTRIC WATER HEATER	NEC	NATIONAL ELECTRICAL CODE
EXH	EXHAUST	NFPA	NATIONAL FIRE PROTECTION ASSOCIATION
EXIST	EXISTING		
FA	FIRE ALARM	PNL	PANEL
FLUOR	FLUORESCENT	PVC	POLYVINYL CHLORIDE
G	GROUND	REC	RECEPTACLE
GEN	ENGINE GENERATOR SET	RGS	RIGID GALVANIZED STEEL
GFI	GROUND FAULT INTERRUPTER	SF	SUPPLY FAN
GFCI	GROUND FAULT CIRCUIT INTERRUPTER	TEL	TELEPHONE
GFGI	GOVERNMENT FURNISHED, GOVERNMENT INSTALLED	TYP	TYPICAL
		UH	UNIT HEATER
GFP	GROUND FAULT PROTECTION	UON	UNLESS OTHERWISE NOTED
GND	GROUND	V	VOLTS
HGT	HEIGHT	VA	VOLT-AMPERES
HOA	HAND-OFF-AUTOMATIC	VAV	VARIABLE AIR VOLUME UNIT
HP	HORSEPOWER	W	WATTS
HVAC	HEATING/VENTILATING / AIR CONDITIONING	WAP	WIRELESS ACCESS POINT
		WP	WEATHER PROOF
HV	HIGH VOLTAGE	XFMR	TRANSFORMER
INC	INCANDESCENT		

WIRING DEVICES

NOTES: ALL MOUNTING HEIGHTS ARE TO TOP, UON
SUBSCRIPTS FOR RECEPTACLES INDICATE THE FOLLOWING:
G - INTEGRAL GFCI.
WP - IN-USE WEATHER-PROOF COVER.

SYMBOL	DESCRIPTION	MOUNTING
	20A, 125V DUPLEX RECEPTACLE.	18" AFF
NEMA	SPECIAL RECEPTACLE WITH NEMA CONFIGURATION AS INDICATED.	18" AFF

EQUIPMENT CONNECTIONS

SYMBOL	DESCRIPTION	MOUNTING
E FCU/A	CONNECTION TO EQUIPMENT LEADS, TERMINAL STRIPS OR CONTROL PANEL INCLUDING ALL CONDUCTORS, CONDUIT, FLEXIBLE CONDUIT, JUNCTION BOXES, CONNECTORS, FITTINGS, ETC., REQUIRED FOR PROPER CONNECTION. COORDINATE EXACT LOCATION WITH THE SUPPLIED EQUIPMENT. SUBSCRIPT INDICATES EQUIPMENT IDENTIFICATION.	AS REQUIRED

NOTE:
IF THIS DRAWING IS LESS THAN 34" X 22"
IT IS A REDUCED SIZE DRAWING

SYM	DESCRIPTION	DATE	APPR
1	MOD P00005	05/2023	
2	MOD P00006 AND P00007	10/2025	

NAVFAC

NICHOLAS G. ZUBRZYCKI LICENSED No 64299 STATE OF FLORIDA PROFESSIONAL ENGINEER

BAMFORTH ENGINEERS + SURVEYORS

AE INFO

APPROVED
FOR COMMANDER NAVFAC
ACTIVITY: Approved by J. Scott Roberts, Asset Management Branch Head & Supervisory Facility Planner, PWD Beaufort, SC via email.
SATISFACTORY TO DATE 12/15/2022

DES	RLW	DRW	RLW
CHK	KLM	PM/DM	KTB / RLH
BRANCH MANAGER	JAS	CHIEF ENG/ARCH	EJA
FP ENGINEER	DSN		

NAVAL FACILITIES ENGINEERING SYSTEMS COMMAND
NORFOLK, VA

DEPARTMENT OF THE NAVY
NAVAL FACILITIES ENGINEERING SYSTEMS COMMAND ~ MID-ATLANTIC
DO CODE:
MCAS BEAUFORT
BEAUFORT, SC
P-475 AIRCRAFT MAINTENANCE HANGAR - VOLUME 1 (BASE BID WITH OPTIONS)
ELECTRICAL LEGEND AND ABBREVIATIONS - VOLUME 1

SCALE: As indicated
EPROJECT NO.: 1363603
CONSTR. CONTR. NO.
NAVFAC DRAWING NO.: 12859356
SHEET 184 OF 1412

EG001

DRAWFORM REVISION: 25 AUGUST 2020

Autodesk Docs://20042 VMFAT 502 735 Maintenance Hangar/20042 F35 maint Hangar_Site Bid Option B_R17/20241.rvt
11/12/2025 11:46:00 AM

A1 DEMOLITION ELECTRICAL SITE PLAN - OVERALL
1" = 50'-0"

NOTES:

SHEET NOTES:

A. THIS SHEET IS FOR AN OVERALL SITE REFERENCE ONLY. DO NOT SCALE OFF OF THIS SHEET.
B. REFER TO DETAIL A1/CS501 IN VOLUME 1 FOR BITUMINOUS PAVEMENT PATCH.

PLAN NORTH N

0 10' 50' 100' 150' 200'
1" = 50' GRAPHIC SCALE

NOTE:
IF THIS DRAWING IS LESS THAN 34" X 22"
IT IS A REDUCED SIZE DRAWING

STM	DESCRIPTION	DATE	APPR
1	MOD P00005	05/2023	
2	MOD P00006 AND P00007	10/2025	

NAVFAC

NICHOLAS G. ZUBRZYCKI LICENSE No 64299 STATE OF FLORIDA PROFESSIONAL ENGINEER

BAMFORTH ENGINEERS & CONTRACTORS

AE INFO

APPROVED
FOR COMMANDER NAVFAC 11/21/2022

ACTIVITY
Approved by J. Scott Roberts, Asset Management Branch Head & Supervisory Facility Planner, PWD Beaufort, SC via email.

SATISFACTORY TO DATE	12/15/2022
DES RLW / DRW RLW / CHK KLM	
PMDM	KTB / RLH
BRANCH MANAGER	JAS
CHIEF ENG/ARCH	EJA
FP ENGINEER	DSN

DEPARTMENT OF THE NAVY
NAVAL FACILITIES ENGINEERING SYSTEMS COMMAND ~ MID-ATLANTIC
NORFOLK, VA
DC CORE:
MCAS BEAUFORT
BEAUFORT, SC

P-475 AIRCRAFT MAINTENANCE HANGAR - VOLUME 1 (BASE BID WITH OPTIONS)

DEMOLITION ELECTRICAL SITE PLAN - OVERALL

SCALE:	1" = 50'-0"
EPROJECT NO.:	1363603
CONSTR. CONTR. NO.	
NAVFAC DRAWING NO.	12859357
SHEET	185 OF 1412

ED100

DRAWFORM REVISION: 25 AUGUST 2020

Autodesk Docs://2042 VMF A1 520 F35 Maintenance Hangar/2042 F35 maint Hangar_Site Bld Option EL.rvt/3224 v4
11/12/2025 11:44:09 AM

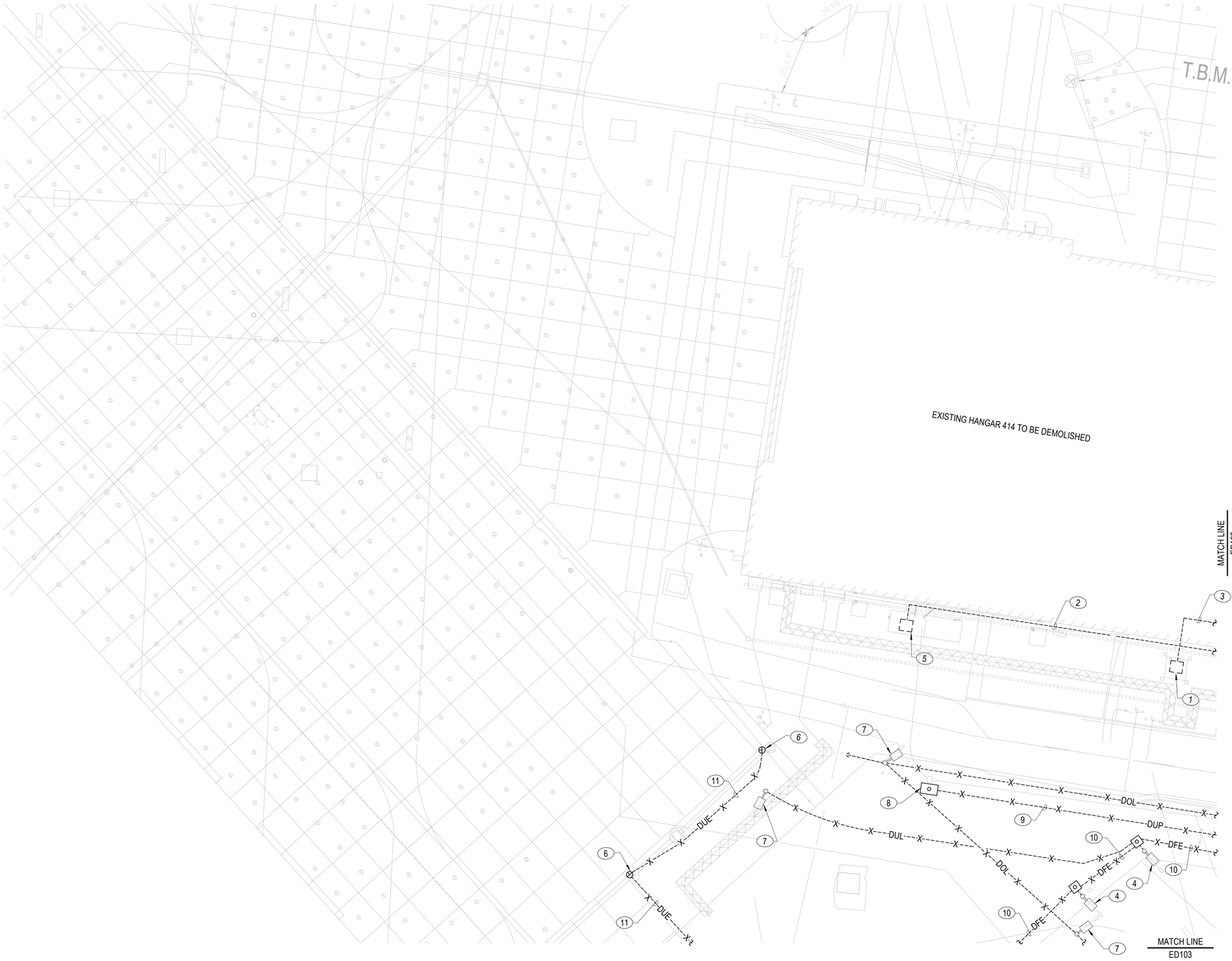

NOTES:

SHEET NOTES:

A. FOR RESTORATION OF PAVEMENT, TRENCHED, AND DISTURBED EXISTING TO REMAIN AREAS , REFER TO CIVIL DRAWINGS.
B. THIS DRAWING REPRESENTS GENERAL ITEMS, SIZES, QUANTITY AND LAYOUT OF ITEMS TO BE REMOVED. VERIFY THE ACTUAL CONDITION AND COMPOSITION OF WORK TO BE PROVIDED.

KEY NOTES (00)

1 REMOVE 400HZ CONVERTER SERVING BUILDING 414.
2 REMOVE 3-#2, 15KV IN 5"C PRIMARY FEEDER, RACK MOUNTED TO BUILDING.
3 REMOVE 3"C - 3-500KCMIL + 1-#1/0 G.
4 REMOVE RESTRICTED AREA SECURITY FENCE POLE TOP LIGHTING FIXTURE AND CONCRETE POLE. TURN OVER LIGHTING FIXTURE AND POLE TO THE GOVERNMENT.
5 REMOVE 300KVA, 12.47KV/480Y/277V PAD MOUNTED TRANSFORMER SERVING BUILDING 414.
6 REMOVE AND RELOCATE APRON EDGE LIGHT AND ISOLATION TRANSFORMER. SEE SHEET ES100A FOR NEW LOCATION.
7 REMOVE POLE TOP LIGHTING FIXTURE, POLE, AND BASE.
8 REMOVE ABANDONED IN-GRADE ELECTRICAL MANHOLE.
9 REMOVE ABANDONED DUCTBANK.
10 REMOVE 2"C - (2)#4 +(1)#4 GND, 480V, SINGE PHASE CIRCUIT SERVING THE MINI DISTRIBUTION CENTER TRANSFORMER PRIMARY, AND 2"C - (2)#10 + (1)#10 GND 480V SINGLE PHASE CIRCUIT SERVING THE FENCE LINE LIGHTING FIXTURES.
11 REMOVE 3/4" PVC CONDUIT WITH (2)#12 + (1)#12 GND.

PLAN NORTH N

0 10' 20' 40' 60' 80'
1" = 20' GRAPHIC SCALE

NOTE:
IF THIS DRAWING IS LESS THAN 34" X 22"
IT IS A REDUCED SIZE DRAWING

A1 DEMOLITION ELECTRICAL SITE PLAN - ED101

1" = 20'-0"

STM	DESCRIPTION	DATE	APPR
1	MOD P00005	05/2023	
2	MOD P00006 AND P00007	10/2025	

NAVFAC

NICHOLAS G. ZUBRZYCKI LICENSED No 64299 STATE OF FLORIDA PROFESSIONAL ENGINEER

SEAL

BAMFORTH ENGINEERS & CONTRACTORS

AE INFO

APPROVED

FOR COMMANDER NAVFAC 11/21/2022

ACTIVITY: Approved by J. Scott Roberts, Asset Management Branch Head & Supervisory Facility Planner, PWD Beaufort, SC via email.

SATISFACTORY TO DATE: 12/15/2022

DES RLW	DRW RLW	CHK KLM	
PM/DM	KTB / RLH		
BRANCH MANAGER	JAS		
CHIEF ENG/ARCH	EJA		
FP ENGINEER	DSN		

NAVAL FACILITIES ENGINEERING SYSTEMS COMMAND
NORFOLK, VA

DEPARTMENT OF THE NAVY
NAVAL FACILITIES ENGINEERING SYSTEMS COMMAND – MID-ATLANTIC

DC CORE:
MCAS BEAUFORT
BEAUFORT, SC

P-475 AIRCRAFT MAINTENANCE HANGAR - VOLUME 1 (BASE BID WITH OPTIONS)

DEMOLITION ELECTRICAL SITE PLAN

SCALE: 1" = 20'-0"
EPROJECT NO.: 1363603
CONSTR. CONTR. NO.
NAVFAC DRAWING NO. 12859358
SHEET 186 OF 1412

ED101

DRAWFORM REVISION: 25 AUGUST 2020

Autodesk Docs://20042 VAF A1 320 F35 Maintenance Hangar/20042 F35 main Hangar_Site Bid Option EL.RVT/20024-r4
11/12/2025 11:44:21 AM

A1 DEMOLITION ELECTRICAL SITE PLAN - ED102

1" = 20'-0"

NOTES:

SHEET NOTES:

A. FOR RESTORATION OF PAVEMENT, TRENCHED, AND DISTURBED EXISTING TO REMAIN AREAS , REFER TO CIVIL DRAWINGS.
B. THIS DRAWING REPRESENTS GENERAL ITEMS, SIZES, QUANTITY AND LAYOUT OF ITEMS TO BE REMOVED. VERIFY THE ACTUAL CONDITION AND COMPOSITION OF WORK TO BE PROVIDED.

KEY NOTES (00)

1 REMOVE 1500KVA, 12.47KV/480Y/277V, 3PH, 4W PAD MOUNTED TRANSFORMER SERVING BUILDING 414.
2 REMOVE 1500KVA, 12.47KV/208Y/120V, 3PH, 4W PAD MOUNTED TRANSFORMER SERVING BUILDING 414.
3 REMOVE 2000A, 480Y/277V, 3PH, 4W PAD MOUNTED EXTERIOR SWITCHBOARD SERVING BUILDING 414.
4 REMOVE 1200A, 208Y/120V, 3PH, 4W PAD MOUNTED EXTERIOR SWITCHBOARD SERVING BUILDING 414.
5 REMOVE CONDUIT RISER UP TO RESTRICTED AREA SECURITY FENCE. CONDUIT IS ROUTED ON FENCE.
6 REMOVE 3"C - 3-500KCMIL + 1-#1/0 G.
7 REMOVE ABANDONED WOOD UTILITY POLE.
8 REMOVE 400HZ CONVERTER SERVING BUILDING 414.
9 REMOVE 300KVA, 12.47KV/480Y/277V PAD MOUNTED TRANSFORMER SERVING BUILDING 414.
10 REMOVE 3-#2, 15KV IN 5"C PRIMARY FEEDER, RACK MOUNTED TO BUILDING.
11 REMOVE 3"C - 3-500KCMIL + 1-#1/0 G.
12 REMOVE EXISTING ELECTRICAL MANHOLE.
13 REMOVE POLE TOP LIGHTING FIXTURE, POLE, AND BASE.
14 REMOVE 400A, 480V PANELBOARD.
15 EXISTING BURIED CONDUITS WITH WIRING SERVING THE 400Hz/270VDC POWER CONVERTERS. REMOVE WIRING, ABANDON CONDUITS IN PLACE.
16 REMOVE MINI DISTRIBUTION CENTER MDC-9. SEE SHEET ES100C FOR NEW MDC-9 LOCATION. THE MINI DISTRIBUTION CENTER INCLUDES A TRANSFORMER AND SECONDARY PANELBOARD. THE TRANSFORMER IS A 5KVA, 480V SINGLE PHASE PRIMARY, 120/240V SECONDARY. PANELBOARD IS RATED 100A, 120/240V, 10KAIC WITH A 30A MCB. SEE SHEET ES100C FOR LOCATION OF NEW MDC-9.
17 REMOVE RESTRICTED AREA SECURITY FENCE POLE TOP LIGHTING FIXTURE AND CONCRETE POLE. TURN OVER LIGHTING FIXTURE AND POLE TO THE GOVERNMENT.
18 TO 480V SWITCHBOARD LOCATED IN HANGAR. COORDINATE EXACT LOCATION WITH CONTRACTING OFFICER.
19 REMOVE 2"C - (2)#4 +(1)#4 GND, 480V, SINGE PHASE CIRCUIT SERVING THE MINI DISTRIBUTION CENTER TRANSFORMER PRIMARY, AND 2"C - (2)#10 + (1)#10 GND 480V SINGLE PHASE CIRCUIT SERVING THE FENCE LINE LIGHTING FIXTURES.
20 REMOVE FIELD DISTRIBUTION BOX. SEE SHEET ES100C FOR LOCATION OF NEW FIELD DISTRIBUTION BOX. RECONNECT TO MINI DISTRIBUTION CENTER AS INDICATED ON SHEET ES100C.
21 REMOVE BATTERY BOX SERVING THE FEILD DISTRIBUTION BOX LOW VOLTAGE CIRCUITS. SEE SHEET ES100C FOR NEW BATTERY BOX LOCATION. EXTEND EXISTING POWER CIRCUIT AS INDICATED.
22 REMOVE ELECTRICAL HANDHOLE.

PLAN NORTH

0 10' 20' 40' 60' 80'

1" = 20' GRAPHIC SCALE

NOTE:
IF THIS DRAWING IS LESS THAN 34" X 22"
IT IS A REDUCED SIZE DRAWING

STM	DESCRIPTION	DATE	APPR
1	MOD P00005	05/2023	
2	MOD P00006 AND P00007	10/2025	

NAVFAC

NICHOLAS G. ZUBRZYCKI LICENSE No 64299 STATE OF FLORIDA PROFESSIONAL ENGINEER

SEAL

BAMFORTH ENGINEERS CONTRACTORS

A/E INFO

APPROVED

FOR COMMANDER NAVFAC 11/21/2022

ACTIVITY
Approved by J. Scott Roberts, Asset Management Branch Head & Supervisory Facility Planner, PWD Beaufort, SC via email.

SATISFACTORY TO DATE 12/15/2022

DES RLW	DRW RLW	CHK KLM	
PMDM	KTB / RLH		
BRANCH MANAGER	JAS		
CHIEF ENG/ARCH	EJA		
FP ENGINEER	DSN		

DEPARTMENT OF THE NAVY
NAVAL FACILITIES ENGINEERING SYSTEMS COMMAND
NAVAL FACILITIES ENGINEERING SYSTEMS COMMAND ~ MID-ATLANTIC
NORFOLK, VA
DC CORE:
MCAS BEAUFORT
BEAUFORT, SC

P-475 AIRCRAFT MAINTENANCE HANGAR - VOLUME 1 (BASE BID WITH OPTIONS)

DEMOLITION ELECTRICAL SITE PLAN

SCALE: 1" = 20'-0"
EPROJECT NO.: 1363603
CONSTR. CONTR. NO.
NAVFAC DRAWING NO. 12859359
SHEET 187 OF 1412

ED102

DRAWFORM REVISION: 25 AUGUST 2020

Autodesk Docs://2042 VAF A1 S02 F33 Maintenance Hangar/2042 F33 main Hangar_Site Bld Option EL R17 2024.rvt
11/12/2025 11:46:32 AM

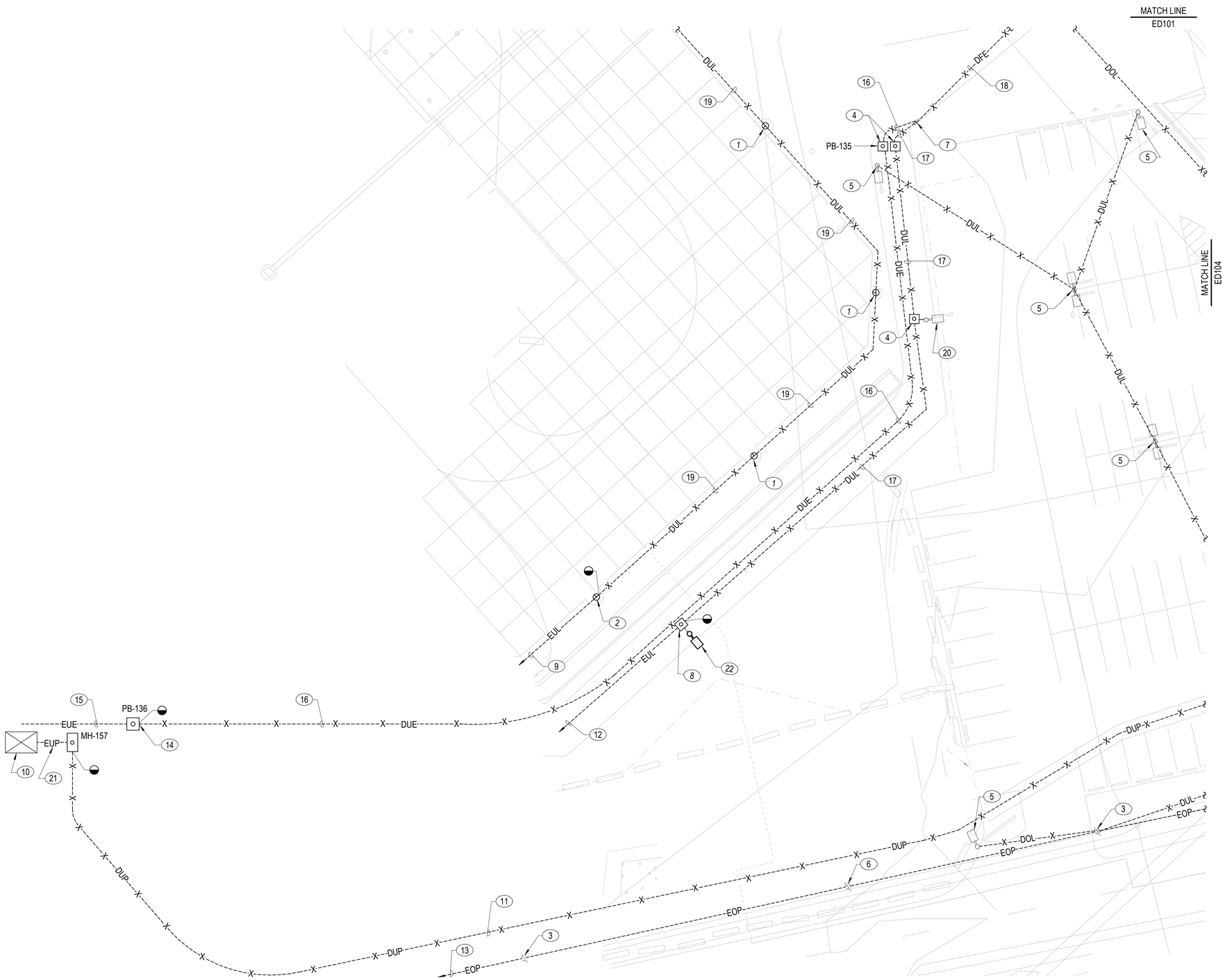

A1 DEMOLITION ELECTRICAL SITE PLAN - ED103

1" = 20'-0"

NOTES:

SHEET NOTES:

A. FOR RESTORATION OF PAVEMENT, TRENCHED, AND DISTURBED EXISTING TO REMAIN AREAS , REFER TO CIVIL DRAWINGS.

B. THIS DRAWING REPRESENTS GENERAL ITEMS, SIZES, QUANTITY AND LAYOUT OF ITEMS TO BE REMOVED. VERIFY THE ACTUAL CONDITION AND COMPOSITION OF WORK TO BE PROVIDED.

KEY NOTES (00)

1 REMOVE AND RELOCATE APRON EDGE LIGHT AND ISOLATION TRANSFORMER. SEE SHEET ES100A FOR NEW LOCATION.

2 APRON EDGE LIGHT TO REMAIN.

3 WOOD UTILITY POLE TO REMAIN.

4 REMOVE ELECTRICAL HANDHOLE.

5 REMOVE POLE TOP LIGHTING FIXTURE, POLE, AND BASE.

6 REMOVE WOOD UTILITY POLE. OVERHEAD PRIMARY POWER LINE DOES NOT ATTACH TO THIS POLE.

7 REMOVE CONDUIT RISERS FROM BELOW. CONDUITS RISE UP FROM BELOW GRADE AND ARE ROUTED ON THE RESTRICTED AREA SECURITY FENCE WHERE INDICATED AS "DFE".

8 MAINTAIN SIX FEET OF THE LIGHTING CIRCUIT CONDUCTORS IN HANDHOLE TO SPLICE TO NEW SECURITY FENCE LIGHTING CONDUCTORS. REFER TO SHEET ES101 FOR CONNECTION TO NEW FIXTURES.

9 EXISTING CIRCUIT CONTINUES TO ADDITIONAL APRON EDGE FIXTURES AND TO BUILDING 728 WHERE CIRCUIT ORIGINATES. COORDINATE LOCATION OF PANEL SERVING APRON EDGE LIGHTS WITH CONTRACTING OFFICER.

10 EXISTING 15KV PAD MOUNTED SWITCH SC-13 TO REMAIN.

11 REMOVE 4 WAY DUCTBANK WITH 15KV FEEDER. REPLACE AS INDICATED ON SHEET ES100C. COORDINATE ALL WORK ON THIS FEEDER WITH THE CONTRACTING OFFICER.

12 EXISTING 2"C - (2)#10 + (1)#10 GND. SERVING ADDITIONAL RESTRICTED AREA SECURITY FENCE LIGHTING FIXTURES.

13 TO ADDITIONAL UTILITY POLES TO REMAIN.

14 MAINTAIN SIX FEET OF THE MINI DISTRIBUTION CENTER CIRCUIT CABLE IN HANDHOLE TO SPLICE TO NEW MINI DISTRIBUTION CENTER CIRCUIT CABLE.

15 CIRCUIT CONTINUES TO ADDITIONAL RESTRICTED AREA SECURITY FENCE MINI DISTRIBUTION CENTERS.

16 REMOVE 2"C (2)#4 + (1)#4 GND. 480V, SINGE PHASE CIRCUIT SERVING THE MINI DISTRIBUTION CENTER TRANSFORMER PRIMARY.

17 REMOVE 2"C - (2)#10 + (1)#10 GND. 480V SINGLE PHASE CIRCUIT SERVING THE RESTRICTED AREA SECURITY FENCE LIGHTING FIXTURE.

18 REMOVE 2"C - (2)#4 +(1)#4 GND, 480V, SINGE PHASE CIRCUIT SERVING THE MINI DISTRIBUTION CENTER TRANSFORMER PRIMARY, AND 2"C - (2)#10 + (1)#10 GND 480V SINGLE PHASE CIRCUIT SERVING THE FENCE LINE LIGHTING FIXTURES.

19 REMOVE 3/4" PVC CONDUIT WITH (2)#12 + (1)#12 GND.

20 REMOVE RESTRICTED AREA SECURITY FENCE POLE TOP LIGHTING FIXTURE AND CONCRETE POLE. TURN OVER LIGHTING FIXTURE AND POLE TO THE GOVERNMENT.

21 EXISTING 4-WAY CONCRETE ENCASED DUCTBANK. FOUR 4" CONDUITS. REMOVE EXISTING 15KV FEEDER. UTILIZE ONE OF THE EXISTING SPARE CONDUITS FOR NEW 15KV FEEDER. SEE SHEET ES100C FOR ADDITIONAL INFORMATION.

22 POLE TOP LIGHTING FIXTURE TO REMAIN.

PLAN NORTH N

0 10' 20' 40' 60' 80'

1" = 20' GRAPHIC SCALE

NOTE:
IF THIS DRAWING IS LESS THAN 34" X 22"
IT IS A REDUCED SIZE DRAWING

STM	DESCRIPTION	DATE	APPR
1	MOD P00005	05/2023	
2	MOD P00006 AND P00007	10/2025	

NAVFAC

NICHOLAS G. ZUBRZYCKI LICENSE No 64299 STATE OF FLORIDA PROFESSIONAL ENGINEER

SEAL

BAMFORTH ENGINEERS - CONSULTANTS

A/E INFO

APPROVED

FOR COMMANDER NAVFAC 11/21/2022

ACTIVITY: Approved by J. Scott Roberts, Asset Management Branch Head & Supervisory Facility Planner, PWD Beaufort, SC via email.

SATISFACTORY TO DATE 12/15/2022

DES RLW	DRW RLW	CHK KLM	
PMDM	KTB / RLH		
BRANCH MANAGER	JAS		
CHIEF ENG/ARCH	EJA		
FP ENGINEER	DSN		

NAVAL FACILITIES ENGINEERING SYSTEMS COMMAND

DEPARTMENT OF THE NAVY
NAVAL FACILITIES ENGINEERING SYSTEMS COMMAND ~ MID-ATLANTIC
NORFOLK, VA

DC CODE: MCAS BEAUFORT

BEAUFORT, SC

P-475 AIRCRAFT MAINTENANCE HANGAR - VOLUME 1 (BASE BID WITH OPTIONS)

DEMOLITION ELECTRICAL SITE PLAN

SCALE: 1" = 20'-0"

EPROJECT NO.: 1363603

CONSTR. CONTR. NO.

NAVFAC DRAWING NO.: 12859360

SHEET 188 OF 1412

ED103

DRAWFORM REVISION: 25 AUGUST 2020

Autodesk Docs://2042 LMFAT 502 F35 Maintenance Hangar/2042 F35 maint Hangar_Site Bid Option EL-R/V72024.rvt
11/12/2025 11:46:43 AM

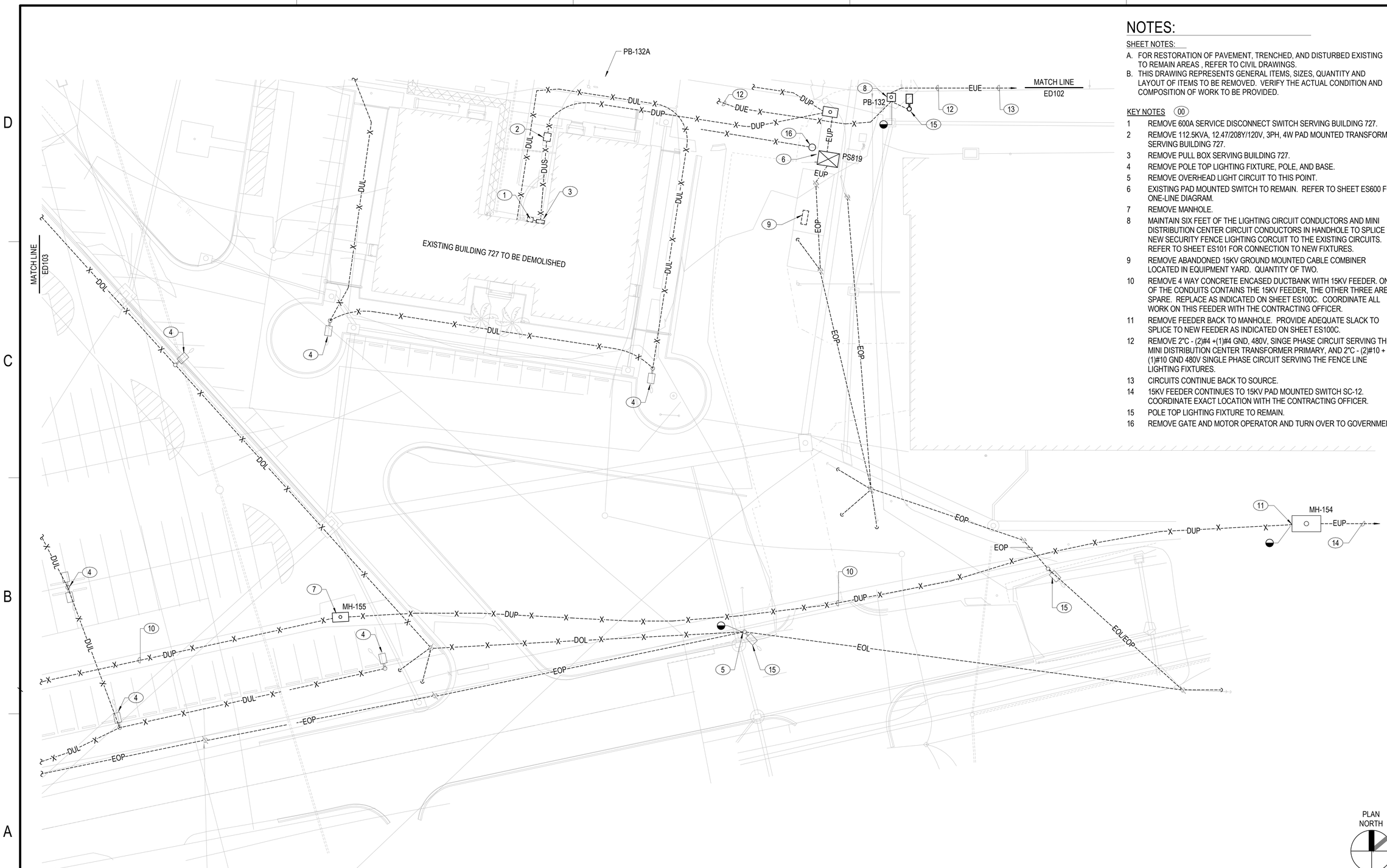

NOTES:

SHEET NOTES:

A. FOR RESTORATION OF PAVEMENT, TRENCHED, AND DISTURBED EXISTING TO REMAIN AREAS , REFER TO CIVIL DRAWINGS.
B. THIS DRAWING REPRESENTS GENERAL ITEMS, SIZES, QUANTITY AND LAYOUT OF ITEMS TO BE REMOVED. VERIFY THE ACTUAL CONDITION AND COMPOSITION OF WORK TO BE PROVIDED.

KEY NOTES (00)

1 REMOVE 600A SERVICE DISCONNECT SWITCH SERVING BUILDING 727.
2 REMOVE 112.5KVA, 12.47/208Y/120V, 3PH, 4W PAD MOUNTED TRANSFORMER SERVING BUILDING 727.
3 REMOVE PULL BOX SERVING BUILDING 727.
4 REMOVE POLE TOP LIGHTING FIXTURE, POLE, AND BASE.
5 REMOVE OVERHEAD LIGHT CIRCUIT TO THIS POINT.
6 EXISTING PAD MOUNTED SWITCH TO REMAIN. REFER TO SHEET ES600 FOR ONE-LINE DIAGRAM.
7 REMOVE MANHOLE.
8 MAINTAIN SIX FEET OF THE LIGHTING CIRCUIT CONDUCTORS AND MINI DISTRIBUTION CENTER CIRCUIT CONDUCTORS IN HANDHOLE TO SPLICE TO NEW SECURITY FENCE LIGHTING CORCUIT TO THE EXISTING CIRCUITS. REFER TO SHEET ES101 FOR CONNECTION TO NEW FIXTURES.
9 REMOVE ABANDONED 15KV GROUND MOUNTED CABLE COMBINER LOCATED IN EQUIPMENT YARD. QUANTITY OF TWO.
10 REMOVE 4 WAY CONCRETE ENCASED DUCTBANK WITH 15KV FEEDER. ONE OF THE CONDUITS CONTAINS THE 15KV FEEDER, THE OTHER THREE ARE SPARE. REPLACE AS INDICATED ON SHEET ES100C. COORDINATE ALL WORK ON THIS FEEDER WITH THE CONTRACTING OFFICER.
11 REMOVE FEEDER BACK TO MANHOLE. PROVIDE ADEQUATE SLACK TO SPLICE TO NEW FEEDER AS INDICATED ON SHEET ES100C.
12 REMOVE 2"C - (2)#4 +(1)#4 GND, 480V, SINGE PHASE CIRCUIT SERVING THE MINI DISTRIBUTION CENTER TRANSFORMER PRIMARY, AND 2"C - (2)#10 + (1)#10 GND 480V SINGLE PHASE CIRCUIT SERVING THE FENCE LINE LIGHTING FIXTURES.
13 CIRCUITS CONTINUE BACK TO SOURCE.
14 15KV FEEDER CONTINUES TO 15KV PAD MOUNTED SWITCH SC-12. COORDINATE EXACT LOCATION WITH THE CONTRACTING OFFICER.
15 POLE TOP LIGHTING FIXTURE TO REMAIN.
16 REMOVE GATE AND MOTOR OPERATOR AND TURN OVER TO GOVERNMENT.

PLAN NORTH

0 10' 20' 40' 60' 80'
1" = 20' GRAPHIC SCALE

NOTE:
IF THIS DRAWING IS LESS THAN 34" X 22"
IT IS A REDUCED SIZE DRAWING

A1 DEMOLITION ELECTRICAL SITE PLAN - ED104

1" = 20'-0"

STM	DESCRIPTION	DATE	APPR
1	MOD P00005	05/2023	
2	MOD P00006 AND P00007	10/2025	

NAVFAC

NICHOLAS G. ZUBRZYCKI LICENSED No 64299 STATE OF FLORIDA PROFESSIONAL ENGINEER

BAMFORTH ENGINEERS - CONTRACTORS

AE INFO

APPROVED
FOR COMMANDER NAVFAC

ACTIVITY: Approved by J. Scott Roberts, Asset Management Branch Head & Supervisory Facility Planner, PWD Beaufort, SC via email.

SATISFACTORY TO DATE 12/15/2022

DES RLW	DRW RLW	CHK KLM	
PM/DM	KTB / RLH		
BRANCH MANAGER	JAS		
CHIEF ENG/ARCH	EJA		
FP ENGINEER	DSN		

DEPARTMENT OF THE NAVY
NAVAL FACILITIES ENGINEERING SYSTEMS COMMAND
DC CORE
NAVAL FACILITIES ENGINEERING SYSTEMS COMMAND - MID-ATLANTIC NORFOLK, VA
MCAS BEAUFORT BEAUFORT, SC

P-475 AIRCRAFT MAINTENANCE HANGAR - VOLUME 1 (BASE BID WITH OPTIONS)

DEMOLITION ELECTRICAL SITE PLAN

SCALE: 1" = 20'-0"
EPROJECT NO.: 1363603
CONSTR. CONTR. NO.
NAVFAC DRAWING NO. 12859361
SHEET 189 OF 1412

ED104

DRAWFORM REVISION: 25 AUGUST 2020

Autodesk Docs://00042 VMFA F-35 F35 Maintenance Hangar/00042 F35 maint Hangar_Site Bid Option EL-R17.2024.rvt
11/12/2025 11:46:52 AM

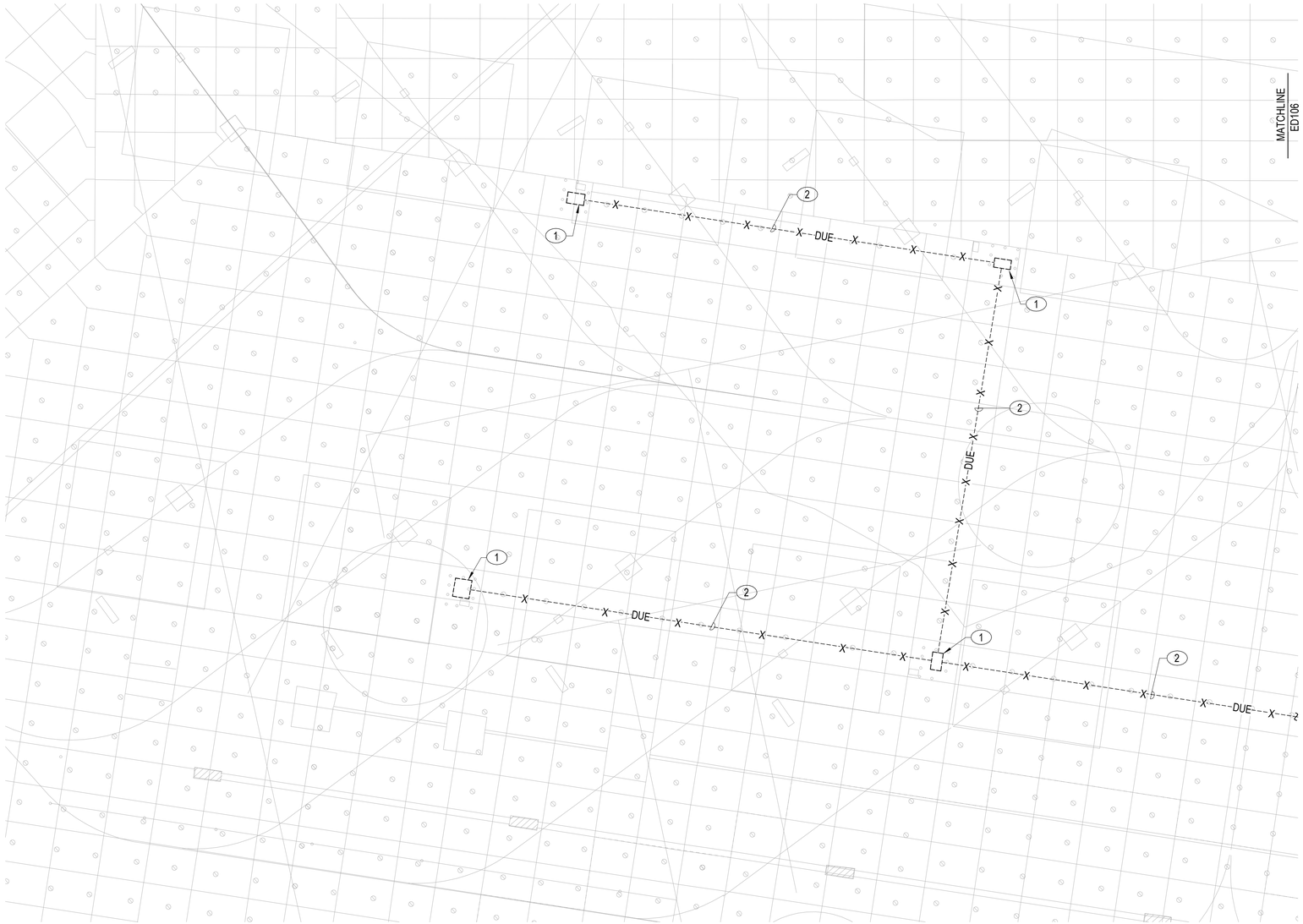

NOTES:

SHEET NOTES:

A. FOR RESTORATION OF PAVEMENT, TRENCHED, AND DISTURBED EXISTING TO REMAIN AREAS , REFER TO CIVIL DRAWINGS.
B. THIS DRAWING REPRESENTS GENERAL ITEMS, SIZES, QUANTITY AND LAYOUT OF ITEMS TO BE REMOVED. VERIFY THE ACTUAL CONDITION AND COMPOSITION OF WORK TO BE PROVIDED.

KEY NOTES (00)

1 REMOVE EXISTING COMBINATION 400Hz/270VDC POWER CONVERTER. TURN OVER TO THE GOVERNMENT. CUT CONDUITS FLUSH WITH CONCRETE SURFACE AND FILL WITH GROUT.

2 EXISTING BURIED CONDUITS WITH WIRING SERVING THE 400Hz/270VDC POWER CONVERTERS. REMOVE WIRING, ABANDON CONDUITS IN PLACE.

A1 DEMOLITION ELECTRICAL SITE PLAN - ED105
1" = 20'-0"

PLAN NORTH

0 10' 20' 40' 60' 80'
1" = 20' GRAPHIC SCALE

NOTE:
IF THIS DRAWING IS LESS THAN 34" X 22"
IT IS A REDUCED SIZE DRAWING

STM	DESCRIPTION	DATE	APPR
1	MOD P00005	05/2023	
2	MOD P00006 AND P00007	10/2025	

NAVFAC

NICHOLAS G. ZUBRZYCKI
LICENSED
No 64299
STATE OF FLORIDA
PROFESSIONAL ENGINEER
SEAL

BAMFORTH
ENGINEERS - CONTRACTORS
AE INFO

APPROVED
FOR COMMANDER NAVFAC 11/21/2022

ACTIVITY
Approved by J. Scott Roberts,
Asset Management Branch Head &
Supervisory Facility Planner, PWD
Beaufort, SC via email.

SATISFACTORY TO DATE 12/15/2022

DES	RLW	DRW	RLW	CHK	KLM
PM/DM	KTB / RLH				
BRANCH MANAGER	JAS				
CHIEF ENG/ARCH	EJA				
FP ENGINEER	DSN				

DEPARTMENT OF THE NAVY
NAVAL FACILITIES ENGINEERING SYSTEMS COMMAND
DC CORE:
MCAS BEAUFORT

NAVAL FACILITIES ENGINEERING SYSTEMS COMMAND ~ MID-ATLANTIC
NORFOLK, VA

BEAUFORT, SC

P-475 AIRCRAFT MAINTENANCE HANGAR - VOLUME 1 (BASE BID WITH OPTIONS)

DEMOLITION ELECTRICAL SITE PLAN

SCALE: 1" = 20'-0"
EPROJECT NO.: 1363603
CONSTR. CONTR. NO.
NAVFAC DRAWING NO.: 12859362
SHEET 190 OF 1412

ED105

DRAWFORM REVISION: 25 AUGUST 2020

Autodesk Docs://00042 \MF-AT 500 F35 Maintenance Hangar/00042 F35 maint Hangar_Site Bid Option EL.RVT/3024-rvt
11/12/2025 11:47:04 AM

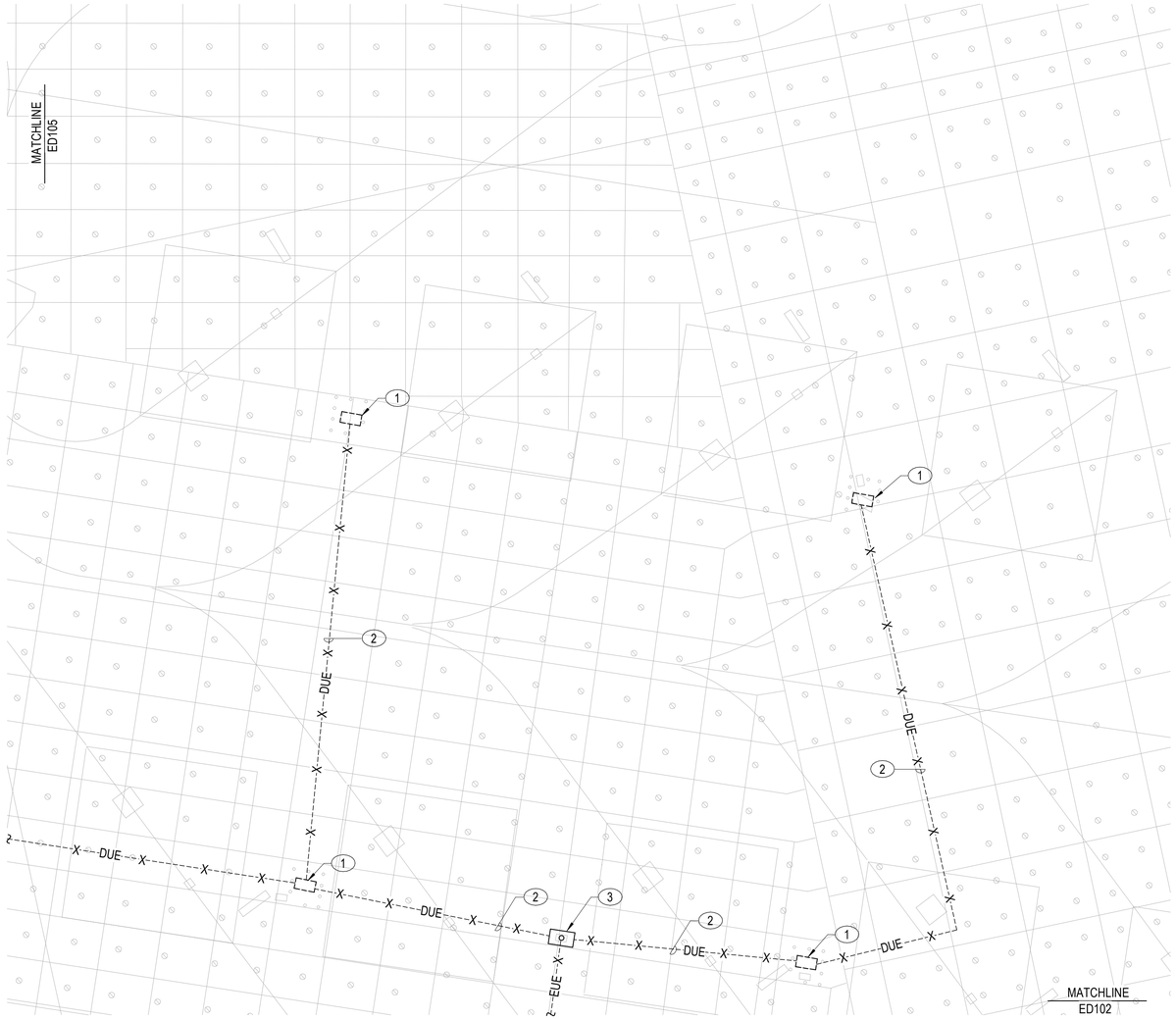

NOTES:

SHEET NOTES:

A. FOR RESTORATION OF PAVEMENT, TRENCHED, AND DISTURBED EXISTING TO REMAIN AREAS , REFER TO CIVIL DRAWINGS.
B. THIS DRAWING REPRESENTS GENERAL ITEMS, SIZES, QUANTITY AND LAYOUT OF ITEMS TO BE REMOVED. VERIFY THE ACTUAL CONDITION AND COMPOSITION OF WORK TO BE PROVIDED.

KEY NOTES (00)

1 REMOVE EXISTING COMBINATION 400Hz/270VDC POWER CONVERTER. TURN OVER TO THE GOVERNMENT. CUT CONDUITS FLUSH WITH CONCRETE SURFACE AND FILL WITH GROUT.
2 EXISTING BURIED CONDUITS WITH WIRING SERVING THE 400Hz/270VDC POWER CONVERTERS. REMOVE WIRING, ABANDON CONDUITS IN PLACE.
3 REMOVE INGRADE MANHOLE.

A1 DEMOLITION ELECTRICAL SITE PLAN - ED106

1" = 20'-0"

PLAN NORTH

N

0 10' 20' 40' 60' 80'

1" = 20' GRAPHIC SCALE

NOTE:
IF THIS DRAWING IS LESS THAN 34" X 22"
IT IS A REDUCED SIZE DRAWING

STM	DESCRIPTION	DATE	APPR
1	MOD P00005	05/2023	
2	MOD P00006 AND P00007	10/2025	

NAVFAC

NICHOLAS G. ZUBRZYCKI LICENSE No 64299 STATE OF FLORIDA PROFESSIONAL ENGINEER

SEAL

BAMFORTH ENGINEERS CONTRACTORS

AE INFO

APPROVED

FOR COMMANDER NAVFAC 11/21/2022

ACTIVITY: Approved by J. Scott Roberts, Asset Management Branch Head & Supervisory Facility Planner, PWD Beaufort, SC via email.

SATISFACTORY TO DATE 12/15/2022

DES RLW	DRW RLW	CHK KLM	
PM/DM	KTB / RLH		
BRANCH MANAGER	JAS		
CHIEF ENG/ARCH	EJA		
FP ENGINEER	DSN		

DEPARTMENT OF THE NAVY
NAVAL FACILITIES ENGINEERING SYSTEMS COMMAND
DC CORE
NAVAL FACILITIES ENGINEERING SYSTEMS COMMAND ~ MID-ATLANTIC
NORFOLK, VA
MCAS BEAUFORT
BEAUFORT, SC

P-475 AIRCRAFT MAINTENANCE HANGAR - VOLUME 1 (BASE BID WITH OPTIONS)

DEMOLITION ELECTRICAL SITE PLAN

SCALE: 1" = 20'-0"
EPROJECT NO.: 1363603
CONSTR. CONTR. NO.
NAVFAC DRAWING NO. 12859363
SHEET 191 OF 1412

ED106

DRAWFORM REVISION: 25 AUGUST 2020

Autodesk Docs://20042 MFA1 502 F35 Maintenance Hangar/20042 F35 maint Hangar_Site Bid Option EL-INV.rvt
11/12/2025 11:47:14 AM

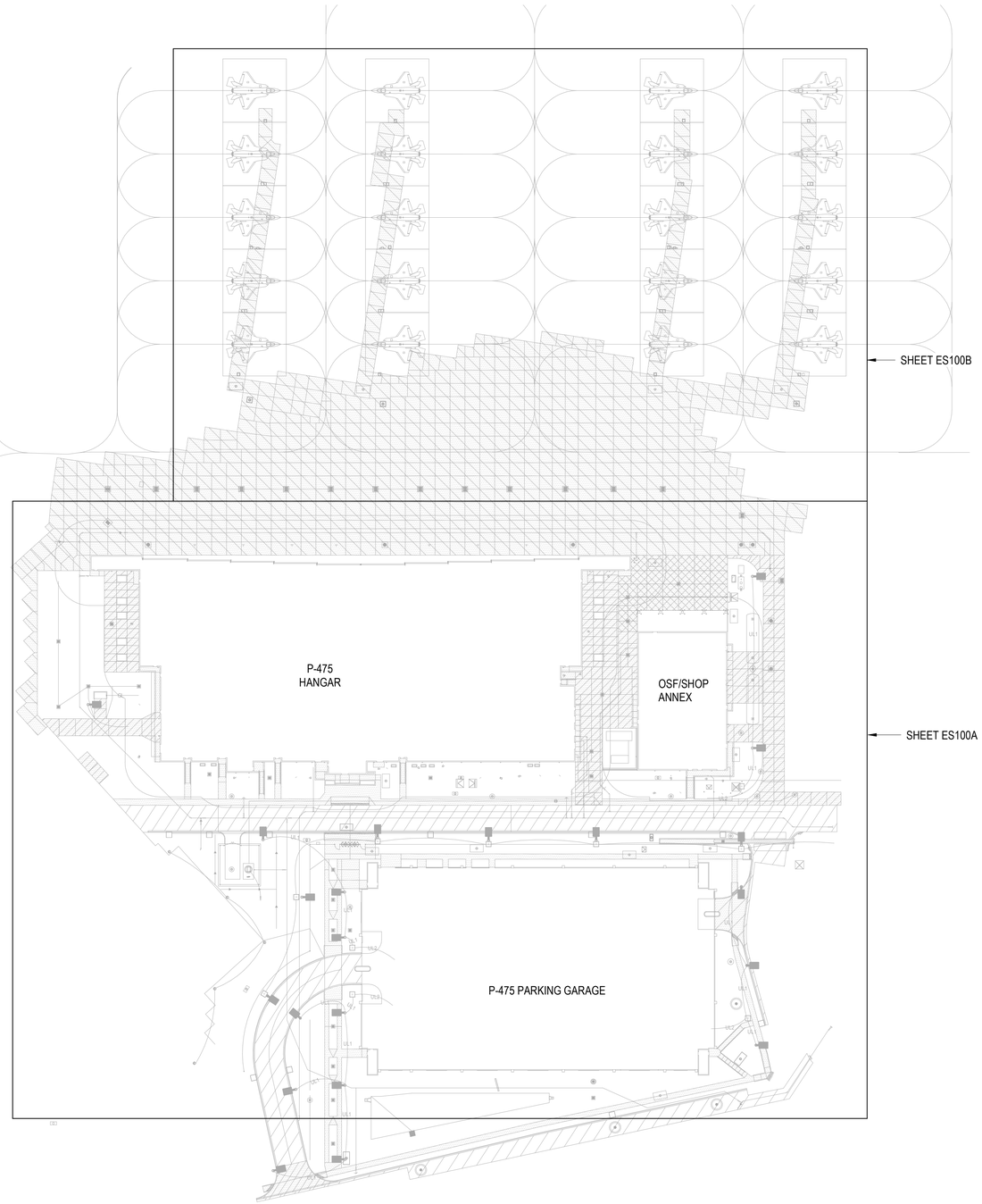

DUCT BANK FEEDER CONDUCTOR SCHEDULE

CABLE DESIGNATION	CABLE DESCRIPTION
1	(3)1/C, 15KV, MV-105, 133% EPR, #4/0 CABLE + (1)1/C #2 600V GROUND (ALUMINUM)
2	(4) #500 KCMIL (ALUMINUM)
3	NOT USED.
4	(4) #600 KCMIL (ALUMINUM)
5	NOT USED.
6	NOT USED.
7	(4) #500 KCMIL + (1) #3/0 GND. (ALUMINUM). CONDUCTORS HAVE BEEN UPSIZED DUE TO VOLTAGE DROP.
8	(4) #500 KCMIL + (1)#3/0 GND. (ALUMINUM)
9	(3)1/C, 15KV, MV-105, 133% EPR, #1 CABLE + (1)1/C #2 600V GROUND (COPPER)

DUCT BANK CONFIGURATION SCHEDULE

DUCT BANK DESIGNATION	DUCT BANK CONFIGURATION	DUCT BANK DETAIL	STEEL REINFORCED DUCTBANK
P-1	5" 2-WAY	C2/ES503	YES
P-2	5" 2-WAY	A2/ES503	NO
P-3	5" 4-WAY	C4/ES504	YES
P-4	5" 4-WAY	A4/ES504	NO
P-5	5" 4-WAY	A4/ES504	NO
P-6	5" 2-WAY	A2/ES504	NO
P-7	5" 2-WAY	A2/ES503	NO
P-8	5" 2-WAY	C2/ES503	YES
P-9	5" 2-WAY	C2/ES503	YES
P-10	5" 2-WAY	C2/ES503	YES
PV-1	4" 4-WAY	A4/ES504	NO
PV-2	4" 4-WAY	A4/ES504	NO
PV-3	4" 4-WAY	C4/ES504	YES
P-1A	4" 4-WAY	C4/ES504	YES
S-1	4" 8-WAY	A3ES507	YES
S-2	4" 8-WAY	A2/ES505	NO
S-3	-	-	-
S-4	-	-	-
S-5	4" 2-WAY	A2/ES503	NO
S-6	4" 2-WAY	A2/ES503	NO
S-7	4" 4-WAY	C4/ES504	YES
F-1	4" 12-WAY	A1/ES501	YES
F-2	4" 12-WAY	A1/ES501	YES
F-3	4" 4-WAY	C4/ES504	YES
F-4	4" 4-WAY	C4/ES504	YES
F-5	4" 4-WAY	C4/ES504	YES
F-6	4" 6-WAY	C2/ES504	YES
F-7	4" 4-WAY	C4/ES504	YES
F-8	4" 4-WAY	C4/ES504	YES
F-9	4" 4-WAY	C4/ES504	YES

PLAN NORTH N

0 50' 100' 150' 200' 250'
1/64" = 1'-0" GRAPHIC SCALE

NOTE:
IF THIS DRAWING IS LESS THAN 34" X 22"
IT IS A REDUCED SIZE DRAWING

***BASE BID/BID OPTION NOTE:**
IF REFERENCED OPTIONS ARE NOT SELECTED, REFER TO VOLUME 6 DRAWINGS FOR BASE BID ONLY INFORMATION.

A1 OVERALL SITE PLAN - ELECTRICAL
1/64" = 1'-0"

STM	DESCRIPTION	DATE	APPR
1	MOD P00005	05/2023	
2	MOD P00006 AND P00007	10/2025	

NAVFAC

NICHOLAS G. ZUBRZYCKI LICENSED No 64299 STATE OF FLORIDA PROFESSIONAL ENGINEER

BAMFORTH ENGINEERS • ARCHITECTS

AE INFO

APPROVED
FOR COMMANDER NAVFAC 11/21/2025
ACTIVITY Approved by J. Scott Roberts, Asset Management Branch Head & Supervisory Facility Planner, PWD Beaufort, SC via email.
SATISFACTORY TO DATE 12/15/2022
DES RLW DRW RLW CHK KLM
PM/DM KTB / RLH
BRANCH MANAGER JAS
CHIEF ENG/ARCH EJA
FP ENGINEER DSN

DEPARTMENT OF THE NAVY
NAVAL FACILITIES ENGINEERING SYSTEMS COMMAND
DC CORE:
NAVAL FACILITIES ENGINEERING SYSTEMS COMMAND ~ MID-ATLANTIC
NORFOLK, VA
MCAS BEAUFORT
BEAUFORT, SC
P-475 AIRCRAFT MAINTENANCE HANGAR - VOLUME 1 (BASE BID WITH OPTIONS)
ELECTRICAL SITE PLAN - OVERALL

SCALE: As indicated
EPROJECT NO.: 1363603
CONSTR. CONTR. NO.
NAVFAC DRAWING NO. 12859364
SHEET 192 OF 1412
ES100

DRAWFORM REVISION: 29 AUGUST 2020

Autodesk Docs://2024_MIF-A1 320 F35 Maintenance Hangar/20063 F35 main Hangar_Site Bid Option EL-RVT2024.rvt
11/12/2025 11:47:22 AM

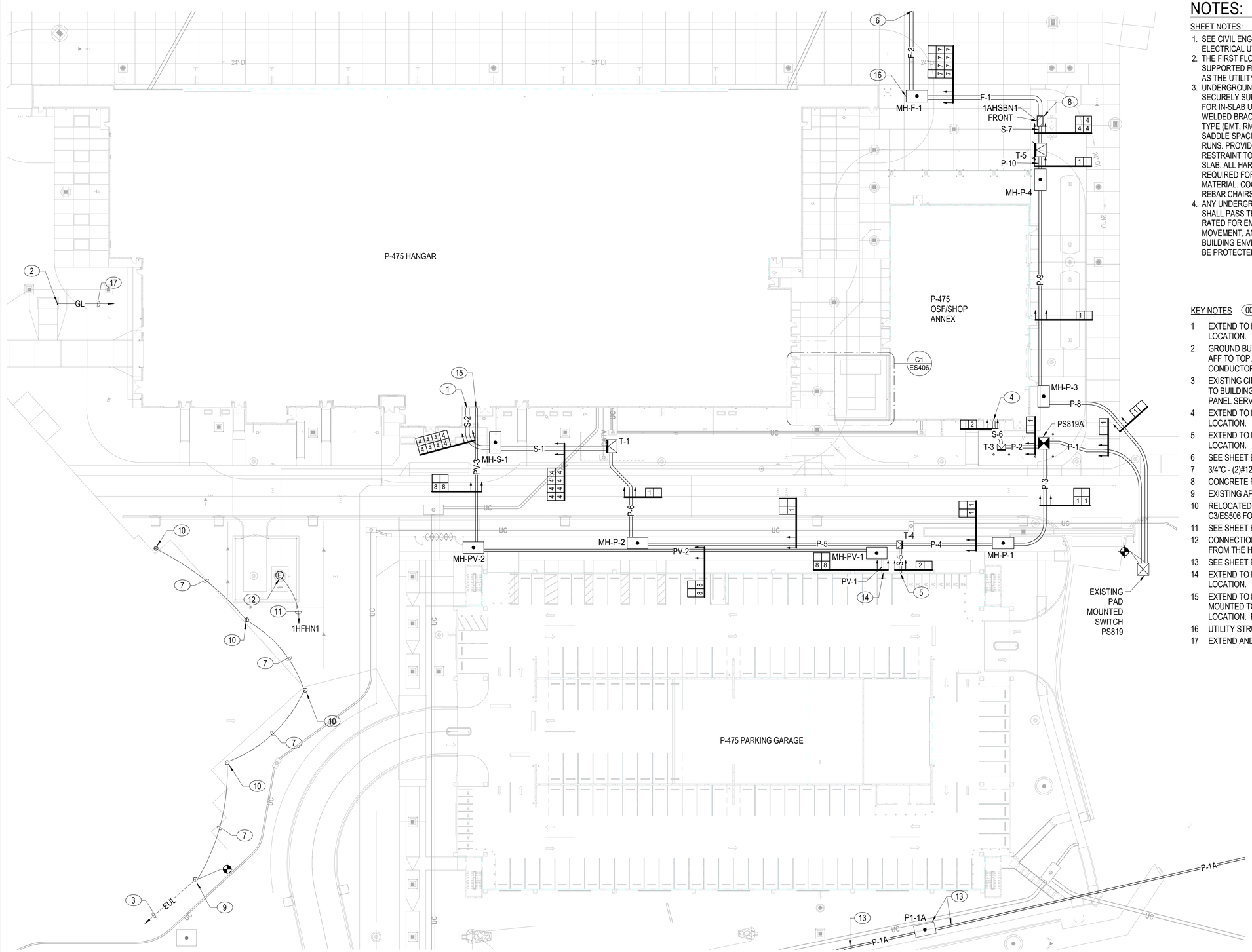

A1 ELECTRICAL SITE PLAN - HANGAR/OSF/SHOP ANNEX

1" = 30'-0"

NOTES:

SHEET NOTES:

1. SEE CIVIL ENGINEERING DEMOLITION SHEETS FOR PROPOSED ROUTING OF ELECTRICAL UTILITIES TO INDIVIDUAL SHADE STRUCTURES.
2. THE FIRST FLOOR SLAB IS A STRUCTURAL SLAB. ALL UTILITIES MUST BE SUPPORTED FROM THE SLAB AND UTILITIES MUST HAVE FLEXIBLE CONNECTORS AS THE UTILITY ENTERS THE BUILDING.
3. UNDERGROUND CONDUITS ROUTED BENEATH THE CONCRETE SLAB SHALL BE SECURELY SUPPORTED BY EMBEDDED CONDUIT SADDLES/BRACKETS RATED FOR IN-SLAB USE. SADDLES SHALL BE ATTACHED TO FOOTING REBAR OR WELDED BRACKETS WITHOUT COMPROMISING REBAR INTEGRITY. CONDUIT TYPE (EMT, RMC/IMC, OR PVC) AND SIZE SHALL DETERMINE SPACING, WITH SADDLE SPACING NOT EXCEEDING 6 FT AND NOT LESS THAN 3 FT FOR TYPICAL RUNS. PROVIDE PROPER ALIGNMENT, REQUIRED CONCRETE COVER, AND RESTRAINT TO PREVENT MOVEMENT DURING POUR AND OVER THE LIFE OF THE SLAB. ALL HARDWARE SHALL BE CORROSION-RESISTANT OR EPOXY-COATED AS REQUIRED FOR ALKALI ENVIRONMENTS AND COMPATIBLE WITH THE CONDUIT MATERIAL. COORDINATE WITH FORMWORK TO AVOID INTERFERENCE WITH REBAR CHAIRS, STIRRUPS, AND EMBEDS.
4. ANY UNDERGROUND ELECTRICAL CONDUIT ENTERING THE BUILDING PERIMETER SHALL PASS THROUGH A FLEXIBLE JOINT OR EXPANSION/CONTRACTION DEVICE RATED FOR EMBEDDED USE TO ACCOMMODATE SETTLEMENT, THERMAL MOVEMENT, AND SOIL SHIFTS. THE FLEXIBLE JOINT SHALL BE LOCATED AT THE BUILDING ENVELOPE ON THE INTERIOR SIDE OF THE EXTERIOR WALL AND SHALL BE PROTECTED FROM MECHANICAL DAMAGE AND MOISTURE INGRESS.

KEY NOTES (00)

1 EXTEND TO BOTTOM OF 1HBHSB1. SEE A1/EP401 IN VOLUME 2B FOR LOCATION.
2 GROUND BUS SERVING THE OXYGEN STORAGE BUILDING. MOUNT AT 6'-0" AFF TO TOP. SEE A2/EP502 IN VOLUME 2B FOR DETAIL. ROUTE GROUNDING CONDUCTOR TO BELOW GRADE IN 1" SCHEDULE 40 PVC.
3 EXISTING CIRCUIT CONTINUES TO ADDITIONAL APRON EDGE FIXTURES AND TO BUILDING 728 WHERE CIRCUIT ORIGINATES. COORDINATE LOCATION OF PANEL SERVING APRON EDGE LIGHTS WITH CONTRACTING OFFICER.
4 EXTEND TO BOTTOM OF 1OHDN1. SEE C2/OEP401 IN VOLUME 3 FOR LOCATION.
5 EXTEND TO BOTTOM OF 1PBLND1. SEE B4/PEP101 IN VOLUME 4 FOR LOCATION.
6 SEE SHEET ES100B FOR CONTINUATION.
7 3/4"C - (2)#12 + (1)#12 GND. BURY AT 36" BELOW FINISHED GRADE TO TOP.
8 CONCRETE PAD. SEE A4/ES503 FOR DETAIL.
9 EXISTING APRON EDGE LIGHT TO REMAIN.
10 RELOCATED APRON EDGE LIGHT AND ISOLATION TRANSFORMER. SEE C3/ES506 FOR MOUNTING DETAIL.
11 SEE SHEET EP603 IN VOLUME 2B FOR CONDUIT AND WIRE SIZE.
12 CONNECTION TO DUPLEX SUBMERSIBLE NON-CLOG PUMP STATION. FED FROM THE HANGAR BUILDING.
13 SEE SHEET ES100C FOR ADDITIONAL INFORMATION.
14 EXTEND TO BOTTOM OF PV INVERTER PVI. SEE B4/PEP101B IN VOLUME 4 FOR LOCATION.
15 EXTEND TO BOTTOM OF 1HBHSB1 VIA UTILITY DISCONNECT SWITCH MOUNTED TO BUILDING EXTERIOR. SEE A1/EP401 IN VOLUME 2B FOR LOCATION. REFER TO EP601 FOR TERMINATIONS.
16 UTILITY STRUCTURE SHALL BE RATED FOR 100,000LB WHEEL LOAD MINIMUM.
17 EXTEND AND BOND TO HANGAR GROUND LOOP CONDUCTOR.

***BASE BID/BID OPTION NOTE:**
IF REFERENCED OPTIONS ARE NOT SELECTED, REFER TO VOLUME 6 DRAWINGS FOR BASE BID ONLY INFORMATION.

PLAN NORTH

0 5' 30' 60' 90' 120'
1" = 30' GRAPHIC SCALE

NOTE:
IF THIS DRAWING IS LESS THAN 34" X 22"
IT IS A REDUCED SIZE DRAWING

STM	DESCRIPTION	DATE	APPR
1	MOD P00005	05/2023	
2	MOD P00006 AND P00007	10/2025	

NAVFAC

NICHOLAS G. ZUBRZYCKI LICENSE No 64299 STATE OF FLORIDA PROFESSIONAL ENGINEER

BAMFORTH ENGINEERS - ARCHITECTS

AE INFO

APPROVED
FOR COMMANDER NAVFAC 11/21/2025

ACTIVITY: Approved by J. Scott Roberts, Asset Management Branch Head & Supervisory Facility Planner, PWD Beaufort, SC via email.

SATISFACTORY TO DATE 12/15/2022

DES	RLW	DRW	RLW	CHK	KLM
PM/DM	KTB / RLH				
BRANCH MANAGER	JAS				
CHIEF ENG/ARCH	EJA				
FP ENGINEER	DSN				

NAVAL FACILITIES ENGINEERING SYSTEMS COMMAND
NAVAL FACILITIES ENGINEERING SYSTEMS COMMAND ~ MID-ATLANTIC
NORFOLK, VA

DEPARTMENT OF THE NAVY
DC CODE: MCAS BEAUFORT

BEAUFORT, SC

P-475 AIRCRAFT MAINTENANCE HANGAR - VOLUME 1 (BASE BID WITH OPTIONS)

ELECTRICAL SITE PLAN - HANGAR, OSF, PARKING GARAGE

SCALE: 1" = 30'-0"
EPROJECT NO.: 1363603
CONSTR. CONTR. NO.
NAVFAC DRAWING NO. 12859365
SHEET 193 OF 1412

ES100A

DRAWFORM REVISION: 25 AUGUST 2020

Autodesk Docs://00042 MF-N 320 F35 Maintenance Hangar/00042 F35 main Hangar_Site Option EL.RVT/2024 rvt
11/12/2025 11:47:45 AM

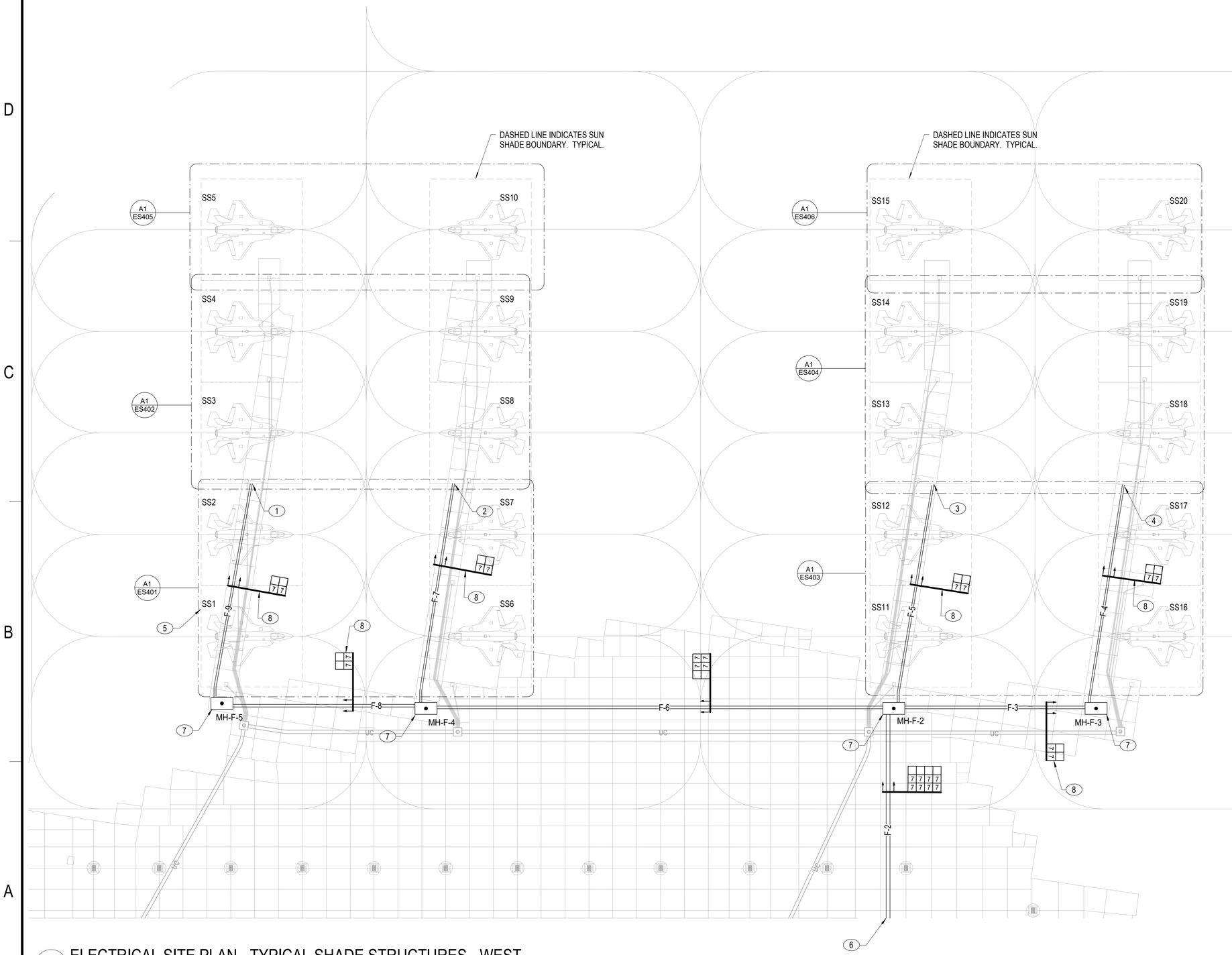

A1 ELECTRICAL SITE PLAN - TYPICAL SHADE STRUCTURES - WEST

1" = 30'-0"

NOTES:

SHEET NOTES:

A. SEE CIVIL ENGINEERING DEMOLITION SHEETS FOR REMOVAL OF EXISTING CONCRETE PANELS INDICATING THE PROPOSED ROUTING OF ELECTRICAL UTILITIES TO INDIVIDUAL SHADE STRUCTURES.

B. COORDINATE INSTALLATION OF ELECTRICAL DUCTBANKS WITH LOW VOLTAGE DUCTBANKS. ELECTRICAL AND LOW VOLTAGE DUCTBANKS SHALL BE ROUTED IN THE SAME TRENCH.

C. UNDERGROUND CONDUITS ROUTED BENEATH THE CONCRETE SLAB SHALL BE SECURELY SUPPORTED BY EMBEDDED CONDUIT SADDLES/BRACKETS RATED FOR IN-SLAB USE. SADDLES SHALL BE ATTACHED TO FOOTING REBAR OR WELDED BRACKETS WITHOUT COMPROMISING REBAR INTEGRITY. CONDUIT TYPE (EMT, RMC/IMC, OR PVC) AND SIZE SHALL DETERMINE SPACING, WITH SADDLE SPACING NOT EXCEEDING 6 FT AND NOT LESS THAN 3 FT FOR TYPICAL RUNS. PROVIDE PROPER ALIGNMENT, REQUIRED CONCRETE COVER, AND RESTRAINT TO PREVENT MOVEMENT DURING POUR AND OVER THE LIFE OF THE SLAB. ALL HARDWARE SHALL BE CORROSION-RESISTANT OR EPOXY-COATED AS REQUIRED FOR ALKALI ENVIRONMENTS AND COMPATIBLE WITH THE CONDUIT MATERIAL. COORDINATE WITH FORMWORK TO AVOID INTERFERENCE WITH REBAR CHAIRS, STIRRUPS, AND EMBEDS.

D. ANY UNDERGROUND ELECTRICAL CONDUIT ENTERING THE BUILDING PERIMETER SHALL PASS THROUGH A FLEXIBLE JOINT OR EXPANSION/CONTRACTION DEVICE RATED FOR EMBEDDED USE TO ACCOMMODATE SETTLEMENT, THERMAL MOVEMENT, AND SOIL SHIFTS. THE FLEXIBLE JOINT SHALL BE LOCATED AT THE BUILDING ENVELOPE ON THE INTERIOR SIDE OF THE EXTERIOR WALL AND SHALL BE PROTECTED FROM MECHANICAL DAMAGE AND MOISTURE INGRESS.

KEY NOTES (00)

1 STUB TWO CONDUITS UP INTO THE BOTTOM OF PANEL 1AHN1. STUB THE ADDITIONAL TWO CONDUITS 12" ABOVE THE FINISHED CONCRETE DECK AND PROVIDE WATER PROOF CAP. SEE A1/ES402 FOR PANEL 1AHN1 LOCATION.

2 STUB TWO CONDUITS UP INTO THE BOTTOM OF PANEL 1AHN2. STUB THE ADDITIONAL TWO CONDUITS 12" ABOVE THE FINISHED CONCRETE DECK AND PROVIDE WATER PROOF CAP. SEE A1/ES402 FOR PANEL 1AHN2 LOCATION.

3 STUB TWO CONDUITS UP INTO THE BOTTOM OF PANEL 1AHN3. STUB THE ADDITIONAL TWO CONDUITS 12" ABOVE THE FINISHED CONCRETE DECK AND PROVIDE WATER PROOF CAP. SEE A1/ES404 FOR PANEL 1AHN3 LOCATION.

4 STUB TWO CONDUITS UP INTO THE BOTTOM OF PANEL 1AHN4. STUB THE ADDITIONAL TWO CONDUITS 12" ABOVE THE FINISHED CONCRETE DECK AND PROVIDE WATER PROOF CAP. SEE A1/ES404 FOR PANEL 1AHN4 LOCATION.

5 INDICATES SHADE STRUCTURE IDENTIFICATION NUMBER, TYPICAL.

6 SEE SHEET ES100A FOR CONTINUATION.

7 UTILITY STRUCTURE SHALL BE RATED FOR 100,000LB WHEEL LOAD MINIMUM.

8 BURY AT 24" BELOW FINISHED CONCRETE PAD TO TOP.

PLAN NORTH N

0 5' 30' 60' 90' 120'

1" = 30' GRAPHIC SCALE

NOTE:
IF THIS DRAWING IS LESS THAN 34" X 22"
IT IS A REDUCED SIZE DRAWING

STM	DESCRIPTION	DATE	APPR
1	MOD P00005	05/2023	
2	MOD P00006 AND P00007	10/2025	

NAVFAC

NICHOLAS G. ZUBRZYCKI LICENSE No 64299 STATE OF FLORIDA PROFESSIONAL ENGINEER

SEAL

BAMFORTH ENGINEERS - ARCHITECTS

AE INFO

APPROVED

FOR COMMANDER NAVFAC 11/21/2022

ACTIVITY
Approved by J. Scott Roberts,
Asset Management Branch Head &
Supervisory Facility Planner, PWD
Beaufort, SC via email.

SATISFACTORY TO DATE 12/15/2022

DES	RLW	DRW	RLW	CHK	KLM
PM/DM					KTB / RLH
BRANCH MANAGER					JAS
CHIEF ENG/ARCH					EJA
FP ENGINEER					DSN

NAVAL FACILITIES ENGINEERING SYSTEMS COMMAND
NORFOLK, VA

DEPARTMENT OF THE NAVY
NAVAL FACILITIES ENGINEERING SYSTEMS COMMAND ~ MID-ATLANTIC
DC CORE

MCAS BEAUFORT
BEAUFORT, SC

P-475 AIRCRAFT MAINTENANCE HANGAR - VOLUME 1 (BASE BID WITH OPTIONS)

ELECTRICAL SITE PLAN - APRON

SCALE: 1" = 30'-0"

EPROJECT NO.: 1363603

CONSTR. CONTR. NO.

NAVFAC DRAWING NO. 12859366

SHEET 194 OF 1412

ES100B

DRAWFORM REVISION: 25 AUGUST 2020

Autodesk Docs://2040_NAFA T 502 F35 Maintenance Hangar/2040_F35 maintHangar_Site Bid Option EL-R17.2024.rvt
11/12/2025 11:48:03 AM

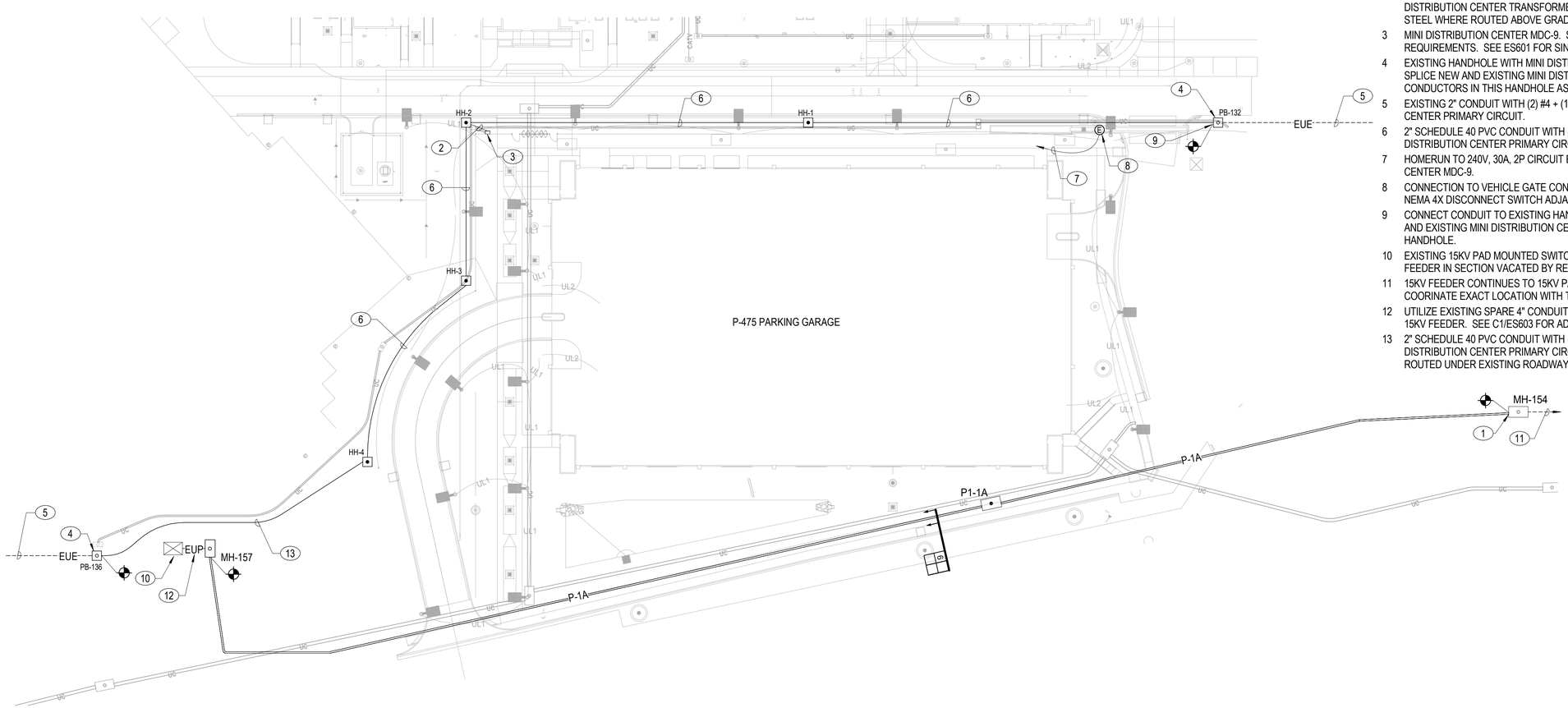

A1 ELECTRICAL SITE PLAN - RESTRICTED AREA SECURITY FENCE UTILITIES

1" = 40'-0"

NOTES:

SHEET NOTES:

A. INTERRUPTION TO THE 15KV FEEDER MUST BE KEPT TO A MINIMUM AS IT FEEDS THE RESTRICTED AREA SECURITY FENCE ACCESS GATES AND SECURITY EQUIPMENT.

B. UNDERGROUND CONDUITS ROUTED BENEATH THE CONCRETE SLAB SHALL BE SECURELY SUPPORTED BY EMBEDDED CONDUIT SADDLES/BRACKETS RATED FOR IN-SLAB USE. SADDLES SHALL BE ATTACHED TO FOOTING REBAR OR WELDED BRACKETS WITHOUT COMPROMISING REBAR INTEGRITY. CONDUIT TYPE (EMT, RMC/IMC, OR PVC) AND SIZE SHALL DETERMINE SPACING, WITH SADDLE SPACING NOT EXCEEDING 6 FT AND NOT LESS THAN 3 FT FOR TYPICAL RUNS. PROVIDE PROPER ALIGNMENT, REQUIRED CONCRETE COVER, AND RESTRAINT TO PREVENT MOVEMENT DURING POUR AND OVER THE LIFE OF THE SLAB. ALL HARDWARE SHALL BE CORROSION-RESISTANT OR EPOXY-COATED AS REQUIRED FOR ALKALI ENVIRONMENTS AND COMPATIBLE WITH THE CONDUIT MATERIAL. COORDINATE WITH FORMWORK TO AVOID INTERFERENCE WITH REBAR CHAIRS, STIRRUPS, AND EMBEDS.

C. ANY UNDERGROUND ELECTRICAL CONDUIT ENTERING THE BUILDING PERIMETER SHALL PASS THROUGH A FLEXIBLE JOINT OR EXPANSION/CONTRACTION DEVICE RATED FOR EMBEDDED USE TO ACCOMMODATE SETTLEMENT, THERMAL MOVEMENT, AND SOIL SHIFTS. THE FLEXIBLE JOINT SHALL BE LOCATED AT THE BUILDING ENVELOPE ON THE INTERIOR SIDE OF THE EXTERIOR WALL AND SHALL BE PROTECTED FROM MECHANICAL DAMAGE AND MOISTURE INGRESS.

KEY NOTES (00)

1 SPLICE TO EXISTING 15KV FEEDER IN MANHOLE. COORDINATE ALL WORK ON THIS FEEDER WITH THE CONTRACTING OFFICER.

2 2" SCHEDULE 40 PVC CONDUIT WITH (2)#4 + (1)#4 GND TO FEED THE MINI DISTRIBUTION CENTER TRANSFORMER PRIMARY. TRANSITION TO RIGID STEEL WHERE ROUTED ABOVE GRADE.

3 MINI DISTRIBUTION CENTER MDC-9. SEE C1/ES507 FOR CONNECTION REQUIREMENTS. SEE ES601 FOR SINGLE LINE DIAGRAM.

4 EXISTING HANDHOLE WITH MINI DISTRIBUTION CENTER PRIMARY CIRCUIT. SPLICE NEW AND EXISTING MINI DISTRIBUTION CENTER PRIMARY CONDUCTORS IN THIS HANDHOLE AS REQUIRED.

5 EXISTING 2" CONDUIT WITH (2) #4 + (1) #4 GND FOR MINI DISTRIBUTION CENTER PRIMARY CIRCUIT.

6 2" SCHEDULE 40 PVC CONDUIT WITH (2) #4 + (1) #4 GND FOR MINI DISTRIBUTION CENTER PRIMARY CIRCUIT.

7 HOMERUN TO 240V, 30A, 2P CIRCUIT BREAKER IN MINI DISTRIBUTION CENTER MDC-9.

8 CONNECTION TO VEHICLE GATE CONTROLLER. PROVIDE 600V, 30A, 3P NEMA 4X DISCONNECT SWITCH ADJACENT TO THE CONTROLLER.

9 CONNECT CONDUIT TO EXISTING HANDHOLE AS INDICATED. SPLICE NEW AND EXISTING MINI DISTRIBUTION CENTER PRIMARY CONDUCTORS IN THIS HANDHOLE.

10 EXISTING 15KV PAD MOUNTED SWITCH SC-13. TERMINATE NEW 15KV FEEDER IN SECTION VACATED BY REMOVED 15KV FEEDER.

11 15KV FEEDER CONTINUES TO 15KV PAD MOUNTED SWITCH SC-12. COORINATE EXACT LOCATION WITH THE CONTRACTING OFFICER.

12 UTILIZE EXISTING SPARE 4" CONDUIT IN 4-WAY DUCTBANK TO ROUTE NEW 15KV FEEDER. SEE C1/ES603 FOR ADDITIONAL INFORMATION.

13 2" SCHEDULE 40 PVC CONDUIT WITH (2) #4 + (1) #4 GND FOR MINI DISTRIBUTION CENTER PRIMARY CIRCUIT. DIRECTIONAL DRILL WHERE ROUTED UNDER EXISTING ROADWAYS OR DRIVES.

PLAN NORTH

N

0 20' 40' 80' 120' 160'

1" = 40' GRAPHIC SCALE

NOTE:
IF THIS DRAWING IS LESS THAN 34" X 22"
IT IS A REDUCED SIZE DRAWING

STM	DESCRIPTION	DATE	APPR
1	MOD P00005	05/2023	
2	MOD P00006 AND P00007	10/2025	

NAVFAC

NICHOLAS G. ZUBRZYCKI LICENSED No 64299 STATE OF FLORIDA PROFESSIONAL ENGINEER

SEAL

BAMFORTH ENGINEERS CONTRACTORS

AE INFO

APPROVED

FOR COMMANDER NAVFAC 11/21/2022

ACTIVITY: Approved by J. Scott Roberts, Asset Management Branch Head & Supervisory Facility Planner, PWD Beaufort, SC via email.

SATISFACTORY TO DATE 12/15/2022

DES	RLW	DRW	RLW	CHK	KLM

PM/DM KTB / RLH

BRANCH MANAGER JAS

CHIEF ENG/ARCH EJA

FP ENGINEER DSN

DEPARTMENT OF THE NAVY
NAVAL FACILITIES ENGINEERING SYSTEMS COMMAND
DC CORE
NAVAL FACILITIES ENGINEERING SYSTEMS COMMAND – MID-ATLANTIC NORFOLK, VA
MCAS BEAUFORT BEAUFORT, SC
P-475 AIRCRAFT MAINTENANCE HANGAR - VOLUME 1 (BASE BID WITH OPTIONS)
ELECTRICAL SITE PLAN - RESTRICTED AREA SECURITY FENCE UTILITIES

SCALE: 1" = 40'-0"

EPROJECT NO.: 1363603

CONSTR. CONTR. NO.

NAVFAC DRAWING NO. 12859367

SHEET 195 OF 1412

ES100C

DRAWFORM REVISION: 25 AUGUST 2020

Autodesk Docs://0242 \ MFAT 100 F35 Maintenance Hangar/0242 F35 maint hangar - Site Bid Option B_R_R_R

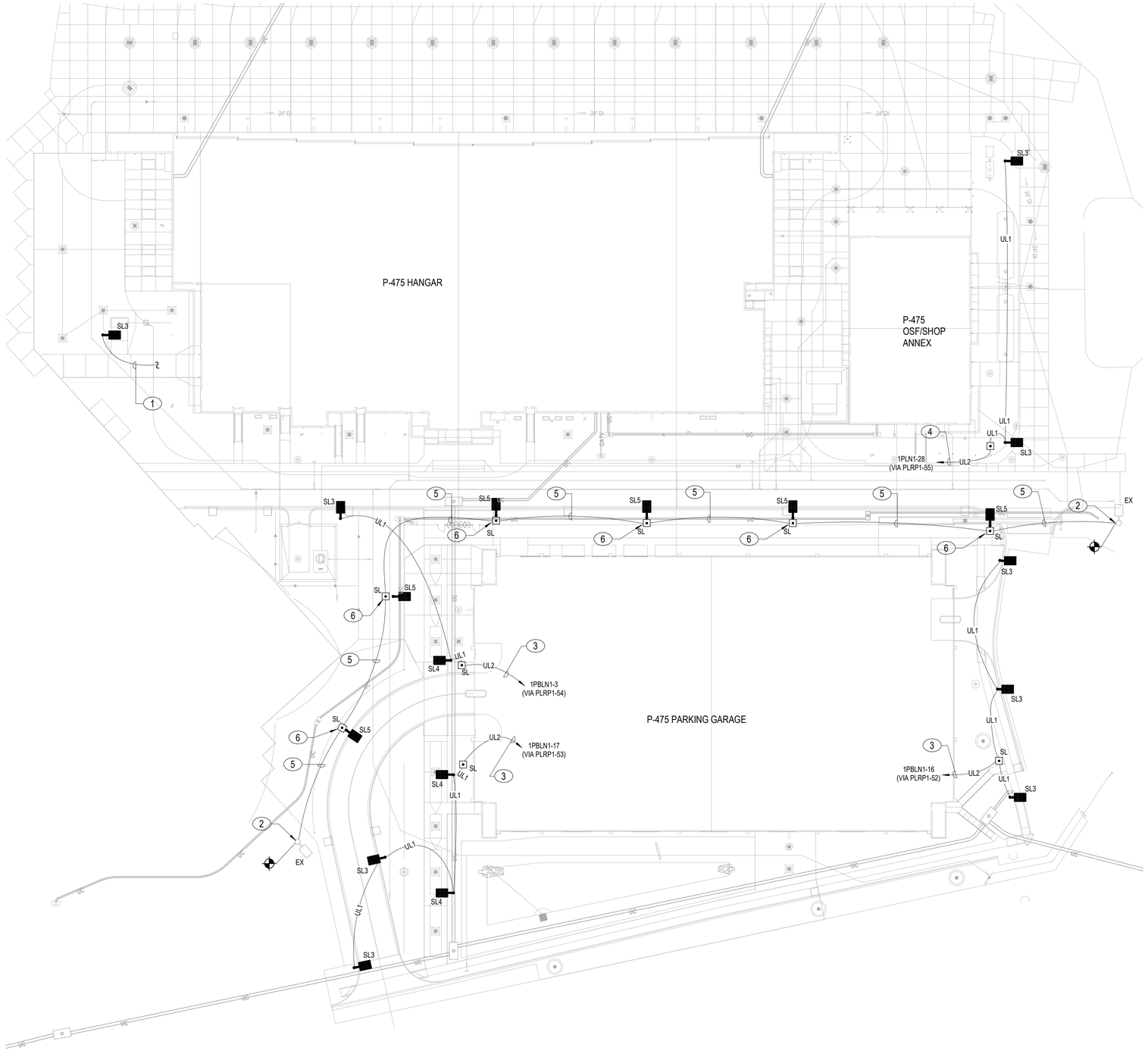

NOTES:

SHEET NOTES:

A. SITE LIGHTING WILL BE CONTROLLED VIA RELAY PANEL LRP1. SEE RELAY PANEL RISER AND RELAY PANEL SCHEDULES ON SHEET EL601 IN VOLUME 2. SEE SHEET EL701 IN VOLUME 2 FOR LIGHTING FIXTURE SCHEDULE.
B. POLE MOUNTED FIXTURES WILL BE POSITIONED SUCH THAT THE EDGE OF THE CONCRETE BASE IS LOCATED 12" FROM THE EDGE OF THE CURB.
C. COORDINATE FINAL LOCATION OF SITE LIGHTING WITH THE LANDSCAPING PLANS.

KEY NOTES (00)

1 SEE SHEET EL101D IN VOLUME 2B FOR CONTINUATION.
2 INTERCEPT EXISTING SECURITY FENCE LIGHTING CIRCUIT IN EXISTING HANDHOLE AND EXTEND AS INDICATED.
3 REFER TO VOLUME 4 PARKING GARAGE FOR PANELBOARD AND RELAY PANEL LOCATION AND ADDITIONAL INFORMATION.
4 REFER TO VOLUME 3 OSF FOR PANELBOARD AND RELAY PANEL LOCATION AND ADDITIONAL INFORMATION.
5 2" C - (2)#10 + (1)#10 GND. FOR RESTRICTED AREA SECURITY FENCE LIGHTING CIRCUIT. BURY AT 24" BELOW FINISHED GRADE TO TOP.
6 PROVIDE 2" C - (2)#10 + (1)#10 GND. FROM HANDHOLE TO LIGHTING FIXTURE. BURY AT 24" BELOW FINISHED GRADE TO TOP. ROUTE CONDUCTORS IN HOLLOW POLE UP TO LIGHTING FIXTURE.

***BASE BID/BID OPTION NOTE:**
IF REFERENCED OPTIONS ARE NOT SELECTED, REFER TO VOLUME 6 DRAWINGS FOR BASE BID ONLY INFORMATION.

PLAN NORTH N

0 20' 40' 80' 120' 160'
1" = 40' GRAPHIC SCALE

NOTE:
IF THIS DRAWING IS LESS THAN 34" X 22"
IT IS A REDUCED SIZE DRAWING

A1 OVERALL SITE PLAN - LIGHTING
1" = 40'-0"

STM	DESCRIPTION	DATE	APPR
1	MOD P00005	05/2023	
2	MOD P00006 AND P00007	10/2025	

NAVFAC

NICHOLAS G. ZUBRZYCKI LICENSED No 64299 STATE OF FLORIDA PROFESSIONAL ENGINEER

BAMFORTH ENGINEERS & CONTRACTORS

AE INFO

APPROVED
FOR COMMANDER NAVFAC 11/21/2022

ACTIVITY: Approved by J. Scott Roberts, Asset Management Branch Head & Supervisory Facility Planner, PWD Beaufort, SC via email.

SATISFACTORY TO DATE	12/15/2022
DES RLW / DRW RLW / CHK KLM	
PM/DM	KTB / RLH
BRANCH MANAGER	JAS
CHIEF ENG/ARCH	EJA
FP ENGINEER	DSN

DEPARTMENT OF THE NAVY
NAVAL FACILITIES ENGINEERING SYSTEMS COMMAND
DC CORE
NAVAL FACILITIES ENGINEERING SYSTEMS COMMAND - MID-ATLANTIC NORFOLK, VA
MCAS BEAUFORT BEAUFORT, SC
P-475 AIRCRAFT MAINTENANCE HANGAR - VOLUME 1 (BASE BID WITH OPTIONS)
LIGHTING SITE PLAN - OVERALL

SCALE:	1" = 40'-0"
EPROJECT NO.:	1363603
CONSTR. CONTR. NO.	
NAVFAC DRAWING NO.	12859368
SHEET	196 OF 1412

ES101

DRAWFORM REVISION: 25 AUGUST 2020

Autodesk Docs://0042 VMFA1 F35 F35 Maintenance Hangar/0042 F35 maintHangar_Site Bid Option EL-R17 2024.rvt
11/12/2025 11:45:23 AM

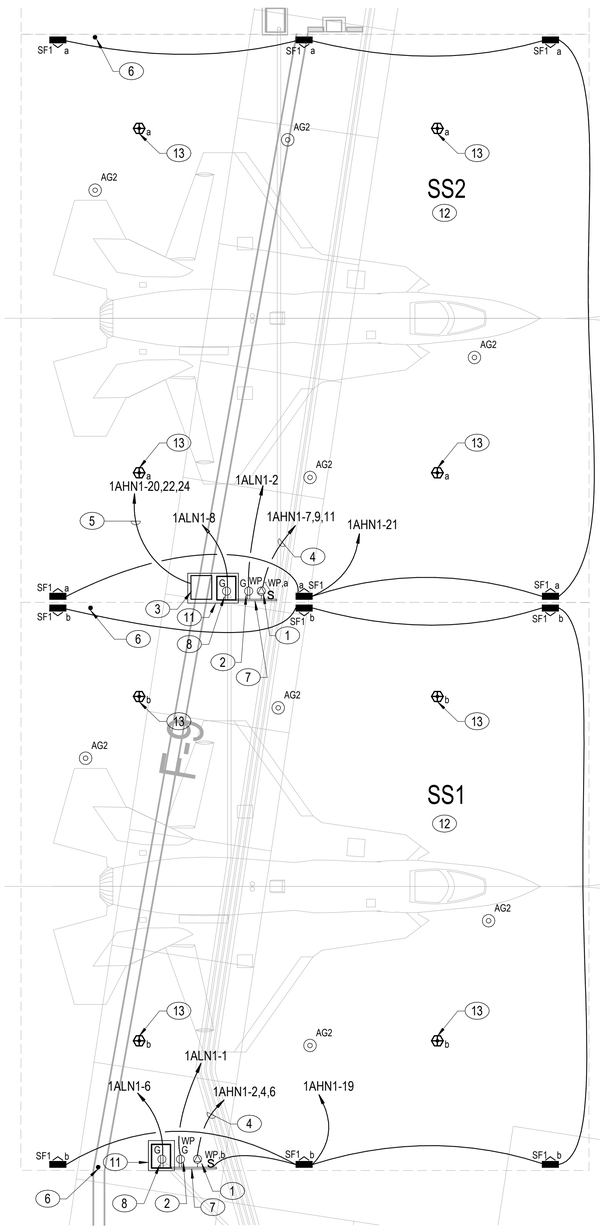

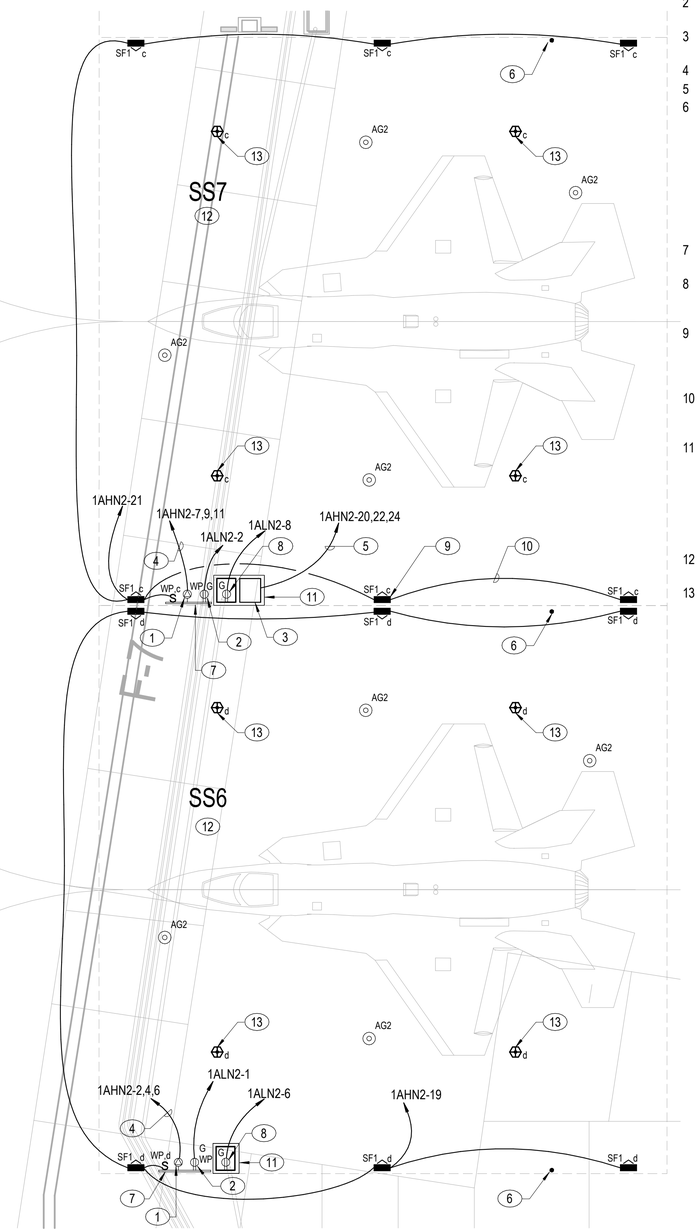

A1 ELECTRICAL SITE PLAN - SHADE STRUCTURES - SS1, SS2, SS6, SS7

1/8" = 1'-0"

NOTES:

KEY NOTES (00)

1. HEAVY DUTY, CLASS L, 480V, 3 PHASE, 3 WIRE, 100A, WEATHERPROOF RECEPTACLE FOR AIRCRAFT SERVICE EQUIPMENT. MOUNT AT 48"AFF TO BOTTOM. AMPHENOL #MS90555C44150S IN IP56 ENCLOSURE. ORIENT RECEPTACLE AT A 45 DEGREE DOWNWARD SLOPE.
2. 20A, 125V DUPLEX RECEPTACLE WITH WEATHERPROOF, CAST ALUMINUM IN-USE COVER.
3. 270VDC, 72KW, CONVERTER IN IP56 ENCLOSURE. CONVERTER SHALL BE EQUIPPED WITH A SINGLE OUTPUT CABLE.
4. 2"C - 3#3 + 1#6 GND.
5. 1 1/2"C - 3#1/0 + 1#6 GND.
6. ¾" X 10' LONG COPPER CLAD STEEL DRIVEN GROUND ROD FOR SHADE STRUCTURE LIGHTNING PROTECTION SYSTEM DOWN CONDUCTOR. GROUND ROD WILL EXTEND 4" ABOVE THE FINISHED CONCRETE SURFACE FOR CONDUCTOR CONNECTION. LIGHTNING PROTECTION SYSTEM IS PROVIDED WITH SHADE STRUCTURE. LOCATE THE GROUND ROD IMMEDIATELY ADJACENT TO ONE OF THE SHADE STRUCTURE COLUMNS, COORDINATE THE INSTALLATION WITH THE GOVERNMENT.
7. EQUIPMENT MOUNTING RACK. SEE A4/ES505 FOR TYPICAL DETAIL.
8. TELECOMMUNICATIONS ENCLOSURE. PROVIDE 20A, 125V DUPLEX RECEPTACLE IN THE ENCLOSURE. COORDINATE EXACT MOUNTING LOCATION WITH ENCLOSURE INSTALLER.
9. MOUNT FIXTURE TO THE STRUCTURAL STEEL MEMBERS OF THE SHADE STRUCTURE AT 10'-0" ABOVE THE APRON SURFACE, AIM FIXTURE TO PROVIDE MAXIMUM ILLUMINATION AT AIRCRAFT PARKING LOCATION. TYPICAL.
10. ROUTE THE LIGHTING FIXTURE CONDUITS ON THE SHADE STRUCTURE. FASTEN TO THE STRUCTURAL STEEL ELEMENTS OF THE SHADE STRUCTURE.
11. 6" HIGH REINFORCED CONCRETE PAD WITH 1/2" HIGH BEVEL ON ALL EDGES. EXTEND PAD 4" BEYOND EQUIPMENT ON ALL SIDES, COORDINATE THE PAD DIMENSIONS WITH THE TELECOMMUNICATIONS ENCLOSURE AND DC CONVERTER. PROVIDE DOWELS TO ANCHOR THE PAD TO THE CONCRETE APRON. ALL EQUIPMENT SHALL BE RIGIDLY MOUNTED TO THE CONCRETE PAD WITH EXPANSION TYPE ANCHORS.
12. SHADE STRUCTURE LIGHT FIXTURES WILL BE CONTROLLED VIA LOCAL ON/OFF SWITCH AND LOCAL OCCUPANCY SENSORS.
13. CEILING-SURFACE MOUNTED, 277V, PASSIVE INFRARED, OCCUPANCY SENSOR FOR USE IN OUTDOOR WET LOCATION. SENSOR SHALL BE PROGRAMMED AS AUTO ON/ AUTO OFF TIME DELAY WITH A 30 MINUTE VACANCY TIMEOUT.

PLAN NORTH N

0 5' 10' 20' 30'

1/8" = 1'-0" GRAPHIC SCALE

NOTE:
IF THIS DRAWING IS LESS THAN 34" X 22"
IT IS A REDUCED SIZE DRAWING

STM	DESCRIPTION	DATE	APPR
1	MOD P00005	05/2023	
2	MOD P00006 AND P00007	10/2025	

NAVFAC

NICHOLAS G. ZUBRZYCKI LICENSE No 64299 STATE OF FLORIDA PROFESSIONAL ENGINEER

BAMFORTH ENGINEERS ~ ARCHITECTS

AE INFO

APPROVED

FOR COMMANDER NAVFAC 11/21/2025

ACTIVITY: Approved by J. Scott Roberts, Asset Management Branch Head & Supervisory Facility Planner, PWD Beaufort, SC via email.

SATISFACTORY TO DATE 12/15/2022

DES	RLW	DRW	RLW	CHK	KLM
PMDM	KTB / RLH				
BRANCH MANAGER	JAS				
CHIEF ENG/ARCH	EJA				
FP ENGINEER	DSN				

DEPARTMENT OF THE NAVY
NAVAL FACILITIES ENGINEERING SYSTEMS COMMAND ~ MID-ATLANTIC
NORFOLK, VA

DC CORE:
MCAS BEAUFORT

BEAUFORT, SC

P-475 AIRCRAFT MAINTENANCE HANGAR - VOLUME 1 (BASE BID WITH OPTIONS)

ENLARGED SITE PLANS

SCALE: 1/8" = 1'-0"

EPROJECT NO.: 1363603

CONSTR. CONTR. NO.

NAVFAC DRAWING NO. 12859369

SHEET 197 OF 1412

ES401

DRAWFORM REVISION: 25 AUGUST 2020

Autodesk Docs://2042 VAF A1 520 F35 Maintenance Hangar/2042 F35 maint Hangar_Site Option EL.rvt/T2024-rvt
11/12/2025 11:48:33 AM

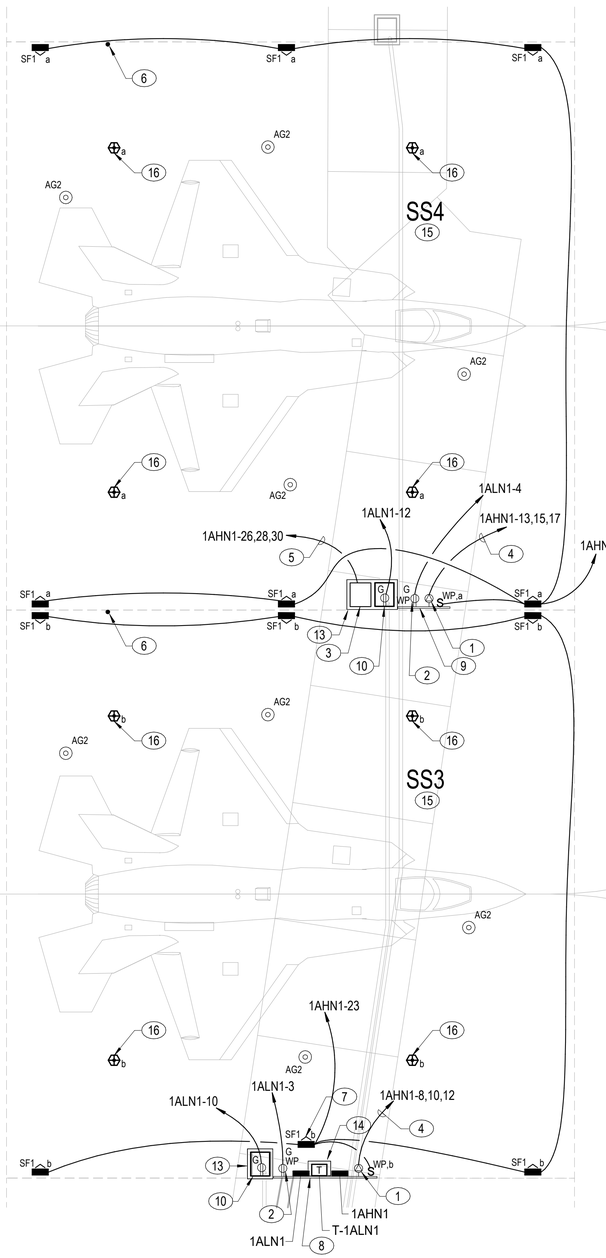

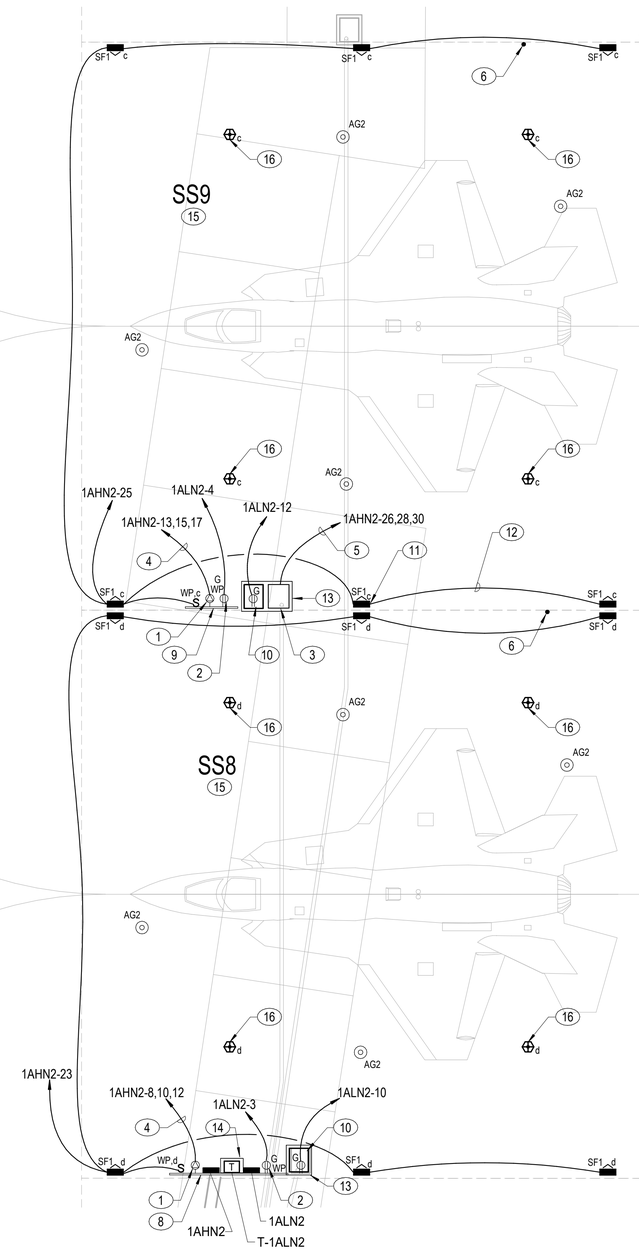

A1 ELECTRICAL SITE PLAN - SHADE STRUCTURE - SS3, SS4, SS8, SS9

1/8" = 1'-0"

NOTES:

KEY NOTES (00)

1. HEAVY DUTY, CLASS L, 480V, 3 PHASE, 3 WIRE, 100A, WEATHERPROOF RECEPTACLE FOR AIRCRAFT SERVICE EQUIPMENT. MOUNT AT 48"AFF TO BOTTOM. AMPHENOL #MS90555C44150S IN IP56 ENCLOSURE. ORIENT RECEPTACLE AT A 45 DEGREE DOWNWARD SLOPE.
2. 20A, 125V DUPLEX RECEPTACLE WITH WEATHERPROOF, CAST ALUMINUM IN-USE COVER.
3. 270VDC, 72KW CONVERTER IN IP56 ENCLOSURE. CONVERTER WILL BE EQUIPPED WITH A SINGLE OUTPUT CABLE.
4. 2"C - 3#3 + 1#6 GND.
5. 1 1/2"C - 3#1/0 + 1#6 GND.
6. ¾" X 10' LONG COPPER CLAD STEEL DRIVEN GROUND ROD FOR SHADE STRUCTURE LIGHTNING PROTECTION SYSTEM DOWN CONDUCTOR. GROUND ROD WILL EXTEND 4" ABOVE THE FINISHED CONCRETE SURFACE FOR CONDUCTOR CONNECTION. LIGHTNING PROTECTION SYSTEM IS PROVIDED WITH SHADE STRUCTURE. LOCATE THE GROUND ROD IMMEDIATELY ADJACENT TO ONE OF THE SHADE STRUCTURE COLUMNS, COORDINATE THE INSTALLATION WITH THE GOVERNMENT.
7. MOUNT FIXTURE TO STRUCTURE ABOVE IN LINE WITH OTHER LIGHT FIXTURES. CURRENT LOCATION IS FOR VISUAL CLARITY ONLY.
8. EQUIPMENT MOUNTING RACK. SEE B4/ES505 FOR TYPICAL DETAIL.
9. EQUIPMENT MOUNTING RACK. SEE A4/ES505 FOR TYPICAL DETAIL.
10. TELECOMMUNICATIONS ENCLOSURE. PROVIDE 20A, 125V DUPLEX RECEPTACLE IN THE ENCLOSURE. COORDINATE EXACT MOUNTING LOCATION WITH ENCLOSURE INSTALLER.
11. MOUNT FIXTURE TO THE STRUCTURAL STEEL MEMBERS OF THE SHADE STRUCTURE AT 10'-0" ABOVE THE APRON SURFACE, AIM FIXTURE TO PROVIDE MAXIMUM ILLUMINATION AT AIRCRAFT PARKING LOCATION. TYPICAL.
12. ROUTE THE LIGHTING FIXTURE CONDUITS ON THE SHADE STRUCTURE. FASTEN TO THE STRUCTURAL STEEL ELEMENTS OF THE SHADE STRUCTURE.
13. 6" HIGH REINFORCED CONCRETE PAD WITH 1/2" HIGH BEVEL ON ALL EDGES. EXTEND PAD 4" BEYOND EQUIPMENT ON ALL SIDES, COORDINATE THE PAD DIMENSIONS WITH THE TELECOMMUNICATIONS ENCLOSURE AND DC CONVERTER. PROVIDE DOWELS TO ANCHOR THE PAD TO THE CONCRETE APRON. ALL EQUIPMENT SHALL BE RIGIDLY MOUNTED TO THE CONCRETE PAD WITH EXPANSION TYPE ANCHORS.
14. 4" HIGH CONCRETE HOUSEKEEPING PAD. EXTEND 4" BEYOND EQUIPMENT ON ALL EXPOSED EDGES AND PROVIDE 1/2" BEVEL. APPLY TWO COATS OF SAFETY YELLOW PAINT ON ALL EXPOSED SURFACES.
15. SHADE STRUCTURE LIGHT FIXTURES WILL BE CONTROLLED VIA LOCAL ON/OFF SWITCH AND LOCAL OCCUPANCY SENSORS.
16. CEILING-SURFACE MOUNTED, 277V, PASSIVE INFRARED, OCCUPANCY SENSOR FOR USE IN OUTDOOR WET LOCATION. SENSOR WILL BE PROGRAMMED AS AUTO ON/ AUTO OFF TIME DELAY WITH A 30 MINUTE VACANCY TIMEOUT.

PLAN NORTH

0 5' 10' 20' 30'

1/8" = 1'-0" GRAPHIC SCALE

NOTE:
IF THIS DRAWING IS LESS THAN 34" X 22"
IT IS A REDUCED SIZE DRAWING

STM	DESCRIPTION	DATE	APPR
1	MOD P00005	05/2023	
2	MOD P00006 AND P00007	10/2025	

NAVFAC

NICHOLAS G. ZUBRZYCKI LICENSED No 64299 STATE OF FLORIDA PROFESSIONAL ENGINEER

BAMFORTH ENGINEERS • SURVEYORS

AE INFO

APPROVED

FOR COMMANDER NAVFAC 11/21/2025

ACTIVITY: Approved by J. Scott Roberts, Asset Management Branch Head & Supervisory Facility Planner, PWD Beaufort, SC via email.

SATISFACTORY TO DATE			12/15/2022
DES RLW	DRW RLW	CHK KLM	
PM/DM			KTB / RLH
BRANCH MANAGER			JAS
CHIEF ENG/ARCH			EJA
FP ENGINEER			DSN

DEPARTMENT OF THE NAVY
NAVAL FACILITIES ENGINEERING SYSTEMS COMMAND
DC CORE
NAVAL FACILITIES ENGINEERING SYSTEMS COMMAND – MID-ATLANTIC NORFOLK, VA
MCAS BEAUFORT
BEAUFORT, SC

P-475 AIRCRAFT MAINTENANCE HANGAR - VOLUME 1 (BASE BID WITH OPTIONS)

ENLARGED SITE PLANS

SCALE:	1/8" = 1'-0"
EPROJECT NO.:	1363603
CONSTR. CONTR. NO.	
NAVFAC DRAWING NO.	12859370
SHEET 198 OF 1412	

ES402

DRAWFORM REVISION: 23 AUGUST 2022

Autodesk Docs://0042 VMFA F-35 F35 Maintenance Hangar/0042 F35 maint Hangar_Site Bid Option BL.RVT2024.rvt
11/12/2025 11:48:41 AM

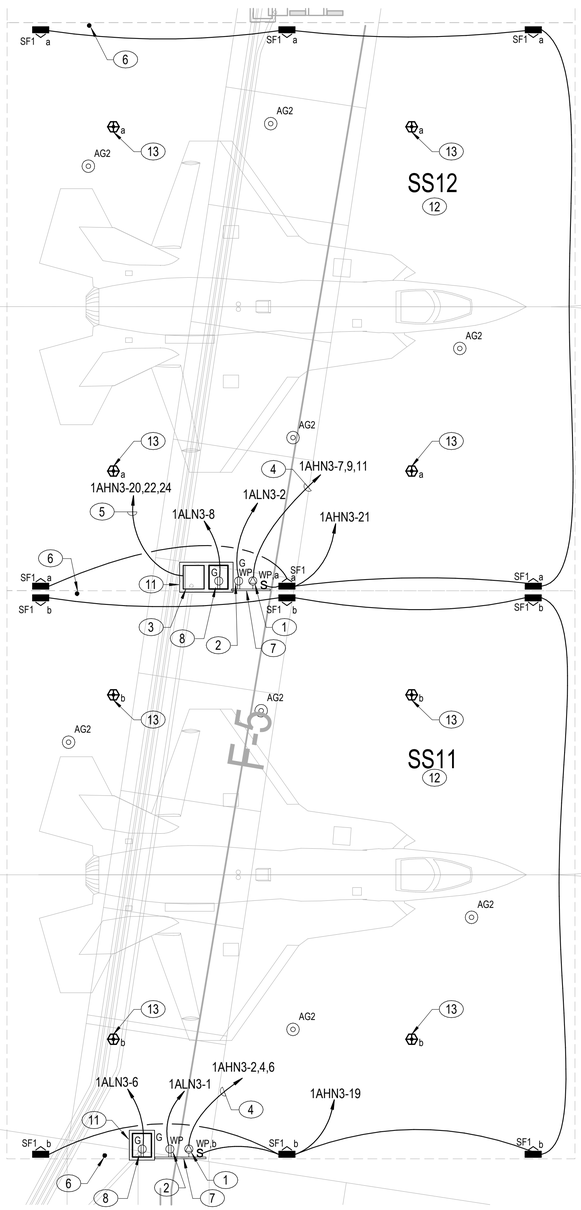

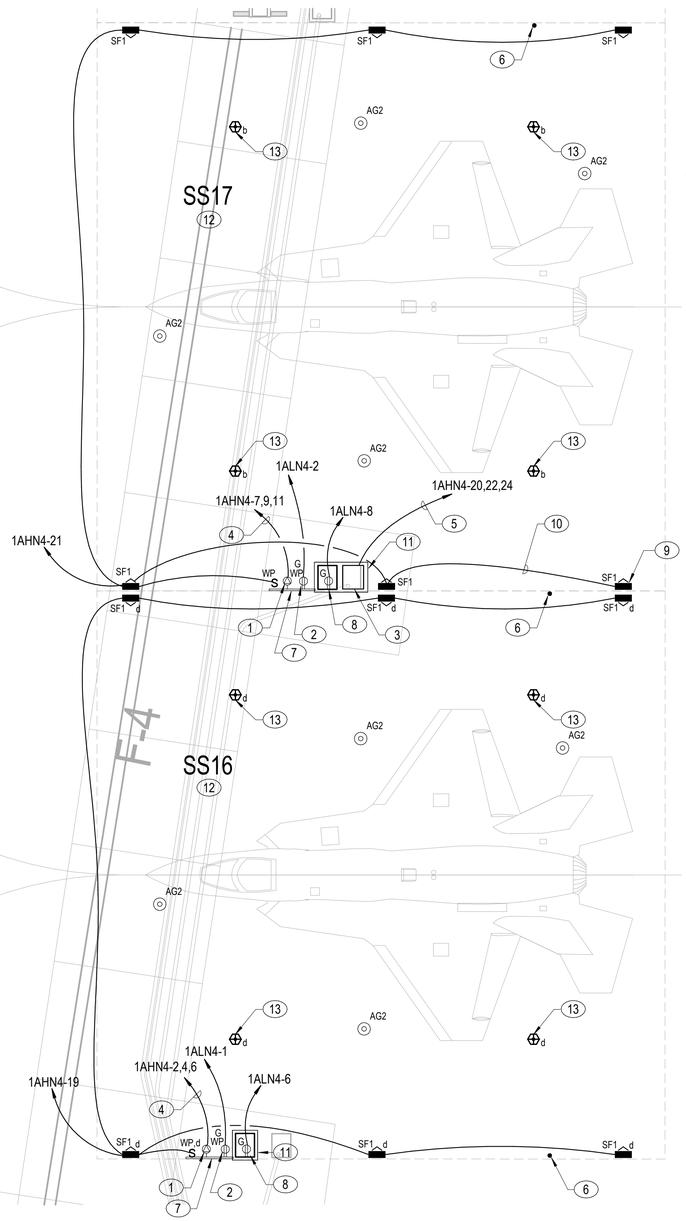

NOTES:

KEY NOTES (00)

1. HEAVY DUTY, CLASS L, 480V, 3 PHASE, 3 WIRE, 100A, WEATHERPROOF RECEPTACLE FOR AIRCRAFT SERVICE EQUIPMENT. MOUNT AT 48"AFF TO BOTTOM. AMPHENOL #MS90555C44150S IN NEMA 4X STAINLESS STEEL ENCLOSURE. ORIENT RECEPTACLE AT A 45 DEGREE DOWNWARD SLOPE.
2. 20A, 125V DUPLEX RECEPTACLE WITH WEATHERPROOF, CAST ALUMINUM IN-USE COVER.
3. 270VDC, 72KW CONVERTER IN IP55 ENCLOSURE. CONVERTER SHALL BE EQUIPPED WITH A SINGLE OUTPUT CABLE.
4. 2"C - 3#3 + 1#6 GND.
5. 1 1/2"C -3#1/0 + 1#6 GND.
6. ¾" X 10' LONG COPPER CLAD STEEL DRIVEN GROUND ROD FOR SHADE STRUCTURE LIGHTNING PROTECTION SYSTEM DOWN CONDUCTOR. GROUND ROD WILL EXTEND 4" ABOVE THE FINISHED CONCRETE SURFACE FOR CONDUCTOR CONNECTION. LIGHTNING PROTECTION SYSTEM IS PROVIDED WITH SHADE STRUCTURE. LOCATE THE GROUND ROD IMMEDIATELY ADJACENT TO ONE OF THE SHADE STRUCTURE COLUMNS, COORDINATE THE INSTALLATION WITH THE GOVERNMENT.
7. EQUIPMENT MOUNTING RACK. SEE A4/ES505 FOR TYPICAL DETAIL.
8. TELECOMMUNICATIONS ENCLOSURE. PROVIDE 20A, 125V DUPLEX RECEPTACLE IN THE ENCLOSURE. COORDINATE EXACT MOUNTING LOCATION WITH ENCLOSURE INSTALLER.
9. MOUNT FIXTURE TO THE STRUCTURAL STEEL MEMBERS OF THE SHADE STRUCTURE AT 10'-0" ABOVE THE APRON SURFACE, AIM FIXTURE TO PROVIDE MAXIMUM ILLUMINATION AT AIRCRAFT PARKING LOCATION. TYPICAL.
10. ROUTE THE LIGHTING FIXTURE CONDUITS ON THE SHADE STRUCTURE. FASTEN TO THE STRUCTURAL STEEL ELEMENTS OF THE SHADE STRUCTURE.
11. 6" HIGH REINFORCED CONCRETE PAD WITH 1/2" HIGH BEVEL ON ALL EDGES. EXTEND PAD 4" BEYOND EQUIPMENT ON ALL SIDES, COORDINATE THE PAD DIMENSIONS WITH THE TELECOMMUNICATIONS ENCLOSURE AND DC CONVERTER. PROVIDE DOWELS TO ANCHOR THE PAD TO THE CONCRETE APRON. ALL EQUIPMENT WILL BE RIGIDLY MOUNTED TO THE CONCRETE PAD WITH EXPANSION TYPE ANCHORS.
12. SHADE STRUCTURE LIGHT FIXTURES WILL BE CONTROLLED VIA LOCAL ON/OFF SWITCH AND LOCAL OCCUPANCY SENSORS.
13. CEILING-SURFACE MOUNTED, 277V, PASSIVE INFRARED, OCCUPANCY SENSOR FOR USE IN OUTDOOR WET LOCATION. SENSOR WILL BE PROGRAMMED AS AUTO ON/ AUTO OFF TIME DELAY WITH A 30 MINUTE VACANCY TIMEOUT.

PLAN NORTH

0 5' 10' 20' 30'

1/8" = 1'-0" GRAPHIC SCALE

NOTE:
IF THIS DRAWING IS LESS THAN 34" X 22"
IT IS A REDUCED SIZE DRAWING

A1 ELECTRICAL SITE PLAN - TYPICAL SHADE STRUCTURES - SS11, SS12, SS16, SS17
1/8" = 1'-0"

STM	DESCRIPTION	DATE	APPR
1	MOD P00005	05/2023	
2	MOD P00006 AND P00007	10/2025	

NAVFAC

NICHOLAS G. ZUBRZYCKI LICENSED No 64299 STATE OF FLORIDA PROFESSIONAL ENGINEER

BAMFORTH ENGINEERS - ARCHITECTS

AE INFO

APPROVED
FOR COMMANDER NAVFAC 11/21/2025

ACTIVITY
Approved by J. Scott Roberts,
Asset Management Branch Head &
Supervisory Facility Planner, PWD
Beaufort, SC via email.

SATISFACTORY TO DATE	12/15/2022
DES RLW / DRW RLW / CHK KLM	
PM/DM	KTB / RLH
BRANCH MANAGER	JAS
CHIEF ENG/ARCH	EJA
FP ENGINEER	DSN

NAVAL FACILITIES ENGINEERING SYSTEMS COMMAND
DEPARTMENT OF THE NAVY
NAVAL FACILITIES ENGINEERING SYSTEMS COMMAND ~ MID-ATLANTIC
NORFOLK, VA
DC CODE:
MCAS BEAUFORT
BEAUFORT, SC

P-475 AIRCRAFT MAINTENANCE HANGAR - VOLUME 1 (BASE BID WITH OPTIONS)

ENLARGED SITE PLANS

SCALE:	1/8" = 1'-0"
EPROJECT NO.:	1363603
CONSTR. CONTR. NO.	
NAVFAC DRAWING NO.	12859371
SHEET	199 OF 1412

ES403

DRAWFORM REVISION: 25 AUGUST 2020

Autodesk Docs://22042_MIFA1 502 F35 Maintenance Hangar/22042 F35 maint Hangar_Site Bid Option EL-INV 25024.rvt
11/12/2025 11:49:49 AM

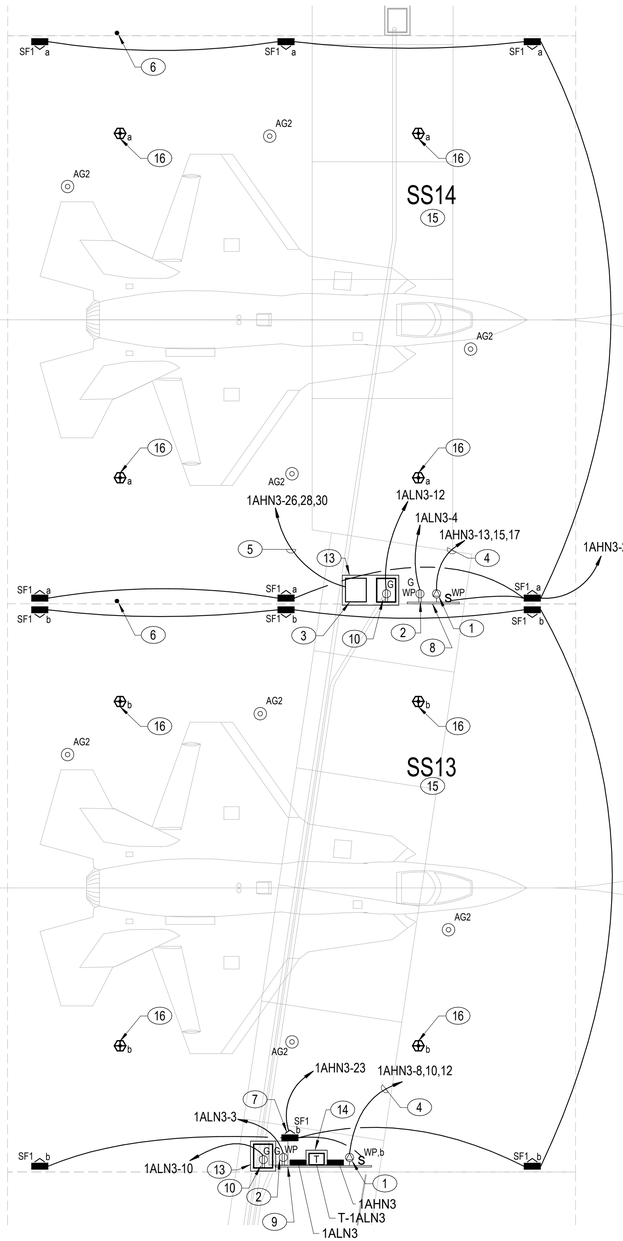

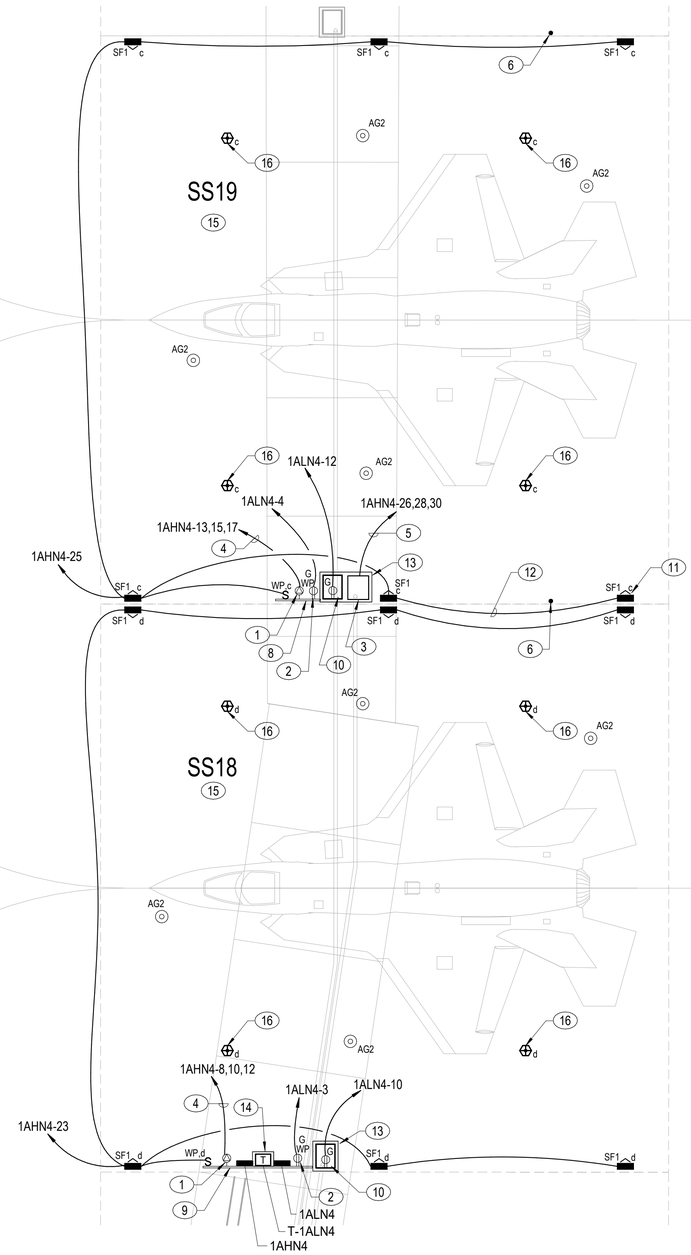

A1 ELECTRICAL SITE PLAN - SHADE STRUCTURES - SS13, SS14, SS18, SS19

1/8" = 1'-0"

NOTES:

KEY NOTES (00)

1 HEAVY DUTY, CLASS L, 480V, 3 PHASE, 3 WIRE, 100A, WEATHERPROOF RECEPTACLE FOR AIRCRAFT SERVICE EQUIPMENT. MOUNT AT 48"AFF TO BOTTOM. AMPHENOL #MS90555C44150S IN IP56 ENCLOSURE. ORIENT RECEPTACLE AT A 45 DEGREE DOWNWARD SLOPE.

2 20A, 125V DUPLEX RECEPTACLE WITH WEATHERPROOF, CAST ALUMINUM IN-USE COVER.

3 270VDC, 72KW CONVERTER IN IP56 ENCLOSURE. CONVERTER WILL BE EQUIPPED WITH A SINGLE OUTPUT CABLE.

4 2"C - 3#3 + 1#6 GND.

5 1 1/2"C -3#1/0 + 1#6 GND.

6 ¾" X 10' LONG COPPER CLAD STEEL DRIVEN GROUND ROD FOR SHADE STRUCTURE LIGHTNING PROTECTION SYSTEM DOWN CONDUCTOR. GROUND ROD WILL EXTEND 4" ABOVE THE FINISHED CONCRETE SURFACE FOR CONDUCTOR CONNECTION. LIGHTNING PROTECTION SYSTEM IS PROVIDED WITH SHADE STRUCTURE. LOCATE THE GROUND ROD IMMEDIATELY ADJACENT TO ONE OF THE SHADE STRUCTURE COLUMNS, COORDINATE THE INSTALLATION WITH THE GOVERNMENT.

7 MOUNT FIXTURE TO STRUCTURE ABOVE IN LINE WITH OTHER LIGHT FIXTURES. CURRENT LOCATION IS FOR VISUAL CLARITY ONLY.

8 EQUIPMENT MOUNTING RACK. SEE A4/ES505 FOR TYPICAL DETAIL.

9 EQUIPMENT MOUNTING RACK. SEE B4/ES505 FOR TYPICAL DETAIL.

10 TELECOMMUNICATIONS ENCLOSURE. PROVIDE 20A, 125V DUPLEX RECEPTACLE IN THE ENCLOSURE. COORDINATE EXACT MOUNTING LOCATION WITH ENCLOSURE INSTALLER.

11 MOUNT FIXTURE TO THE STRUCTURAL STEEL MEMBERS OF THE SHADE STRUCTURE AT 10'-0" ABOVE THE APRON SURFACE, AIM FIXTURE TO PROVIDE MAXIMUM ILLUMINATION AT AIRCRAFT PARKING LOCATION. TYPICAL.

12 ROUTE THE LIGHTING FIXTURE CONDUITS ON THE SHADE STRUCTURE. FASTEN TO THE STRUCTURAL STEEL ELEMENTS OF THE SHADE STRUCTURE.

13 6" HIGH REINFORCED CONCRETE PAD WITH 1/2" HIGH BEVEL ON ALL EDGES. EXTEND PAD 4" BEYOND EQUIPMENT ON ALL SIDES, COORDINATE THE PAD DIMENSIONS WITH THE TELECOMMUNICATIONS ENCLOSURE AND DC CONVERTER. PROVIDE DOWELS TO ANCHOR THE PAD TO THE CONCRETE APRON. ALL EQUIPMENT WILL BE RIGIDLY MOUNTED TO THE CONCRETE PAD WITH EXPANSION TYPE ANCHORS.

14 4" HIGH CONCRETE HOUSEKEEPING PAD. EXTEND 4" BEYOND EQUIPMENT ON ALL EXPOSED EDGES AND PROVIDE 1/2" BEVEL. APPLY TWO COATS OF SAFETY YELLOW PAINT ON ALL EXPOSED SURFACES.

15 SHADE STRUCTURE LIGHT FIXTURES WILL BE CONTROLLED VIA LOCAL ON/OFF SWITCH AND LOCAL OCCUPANCY SENSORS.

16 CEILING-SURFACE MOUNTED, 277V, PASSIVE INFRARED, OCCUPANCY SENSOR FOR USE IN OUTDOOR WET LOCATION. SENSOR WILL BE PROGRAMMED AS AUTO ON/ AUTO OFF TIME DELAY WITH A 30 MINUTE VACANCY TIMEOUT.

PLAN NORTH

0 5' 10' 20' 30'

1/8" = 1'-0" GRAPHIC SCALE

NOTE:
IF THIS DRAWING IS LESS THAN 34" X 22"
IT IS A REDUCED SIZE DRAWING

STM	DESCRIPTION	DATE	APPR
1	MOD P00005	05/2023	
2	MOD P00006 AND P00007	10/2025	

NAVFAC

NICHOLAS G. ZUBRZYCKI LICENSE No 64299 STATE OF FLORIDA PROFESSIONAL ENGINEER

SEAL

BAMFORTH ENGINEERS ARCHITECTS

A/E INFO

APPROVED

FOR COMMANDER NAVFAC 11/21/2025

ACTIVITY: Approved by J. Scott Roberts, Asset Management Branch Head & Supervisory Facility Planner, PWD Beaufort, SC via email.

SATISFACTORY TO DATE 12/15/2022

DES RLW | DRW RLW | CHK KLM

PMDM KTB / RLH

BRANCH MANAGER JAS

CHIEF ENG/ARCH EJA

FP ENGINEER DSN

DEPARTMENT OF THE NAVY
NAVAL FACILITIES ENGINEERING SYSTEMS COMMAND
NAVAL FACILITIES ENGINEERING SYSTEMS COMMAND ~ MID-ATLANTIC
NORFOLK, VA

DC CORE:
MCAS BEAUFORT
BEAUFORT, SC

P-475 AIRCRAFT MAINTENANCE HANGAR - VOLUME 1 (BASE BID WITH OPTIONS)

ENLARGED SITE PLANS

SCALE: 1/8" = 1'-0"

EPROJECT NO.: 1363603

CONSTR. CONTR. NO.

NAVFAC DRAWING NO. 12859372

SHEET 200 OF 1412

ES404

DRAWFORM REVISION: 25 AUGUST 2020

Autodesk Docs://20042 VAF A1 320 F35 Maintenance Hangar/20042 F35 maint Hangar_Site Ops Option EL.rvt/T20241-rvt
11/12/2025 11:48:56 AM

NOTES:

KEY NOTES (00)

1. HEAVY DUTY, CLASS L, 480V, 3 PHASE, 3 WIRE, 100A, WEATHERPROOF RECEPTACLE FOR AIRCRAFT SERVICE EQUIPMENT. MOUNT AT 48"AFF TO BOTTOM. AMPHENOL #MS90555C44150S IN IP56 ENCLOSURE. ORIENT RECEPTACLE AT A 45 DEGREE DOWNWARD SLOPE.
2. 20A, 125V DUPLEX RECEPTACLE WITH WEATHERPROOF, CAST ALUMINUM IN-USE COVER.
3. 2"C - 3#3 + 1#6 GND.
4. ¾" X 10' LONG COPPER CLAD STEEL DRIVEN GROUND ROD FOR SHADE STRUCTURE LIGHTNING PROTECTION SYSTEM DOWN CONDUCTOR. GROUND ROD WILL EXTEND 4" ABOVE THE FINISHED CONCRETE SURFACE FOR CONDUCTOR CONNECTION. LIGHTNING PROTECTION SYSTEM IS PROVIDED WITH SHADE STRUCTURE. LOCATE THE GROUND ROD IMMEDIATELY ADJACENT TO ONE OF THE SHADE STRUCTURE COLUMNS, COORDINATE THE INSTALLATION WITH THE GOVERNMENT.
5. EQUIPMENT MOUNTING RACK. SEE A4/ES505 FOR TYPICAL DETAIL.
6. TELECOMMUNICATIONS ENCLOSURE. PROVIDE 20A, 125V DUPLEX RECEPTACLE IN THE ENCLOSURE. COORDINATE EXACT MOUNTING LOCATION WITH ENCLOSURE INSTALLER.
7. MOUNT FIXTURE TO THE STRUCTURAL STEEL MEMBERS OF THE SHADE STRUCTURE AT 10'-0" ABOVE THE APRON SURFACE, AIM FIXTURE TO PROVIDE MAXIMUM ILLUMINATION AT AIRCRAFT PARKING LOCATION. TYPICAL.
8. ROUTE THE LIGHTING FIXTURE CONDUITS ON THE SHADE STRUCTURE. FASTEN TO THE STRUCTURAL STEEL ELEMENTS OF THE SHADE STRUCTURE.
9. 6" HIGH REINFORCED CONCRETE PAD WITH 1/2" HIGH BEVEL ON ALL EDGES. EXTEND PAD 4" BEYOND EQUIPMENT ON ALL SIDES, COORDINATE THE PAD DIMENSIONS WITH THE TELECOMMUNICATIONS ENCLOSURE AND DC CONVERTER. PROVIDE DOWELS TO ANCHOR THE PAD TO THE CONCRETE APRON. ALL EQUIPMENT WILL BE RIGIDLY MOUNTED TO THE CONCRETE PAD WITH EXPANSION TYPE ANCHORS.
10. SHADE STRUCTURE LIGHT FIXTURES WILL BE CONTROLLED VIA LOCAL ON/OFF SWITCH AND LOCAL OCCUPANCY SENSORS.
11. CEILING-SURFACE MOUNTED, 277V, PASSIVE INFRARED, OCCUPANCY SENSOR FOR USE IN OUTDOOR WET LOCATION. SENSOR SHALL BE PROGRAMMED AS AUTO ON/ AUTO OFF TIME DELAY WITH A 30 MINUTE VACANCY TIMEOUT.

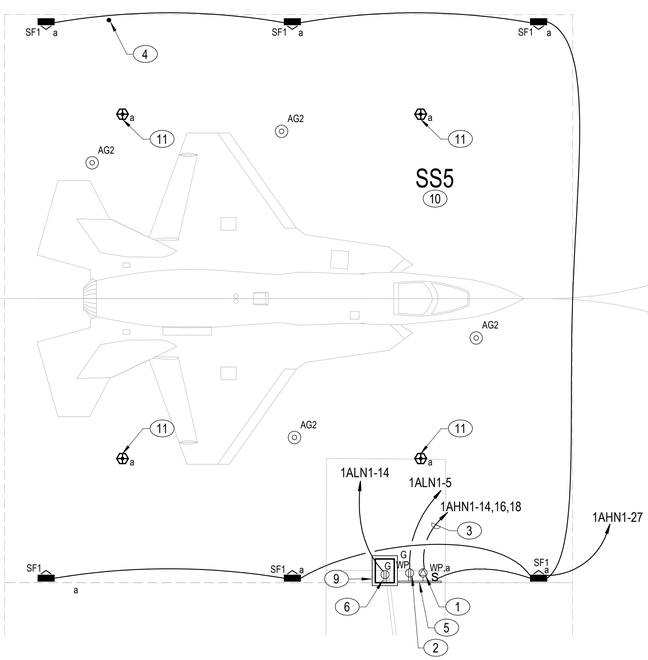

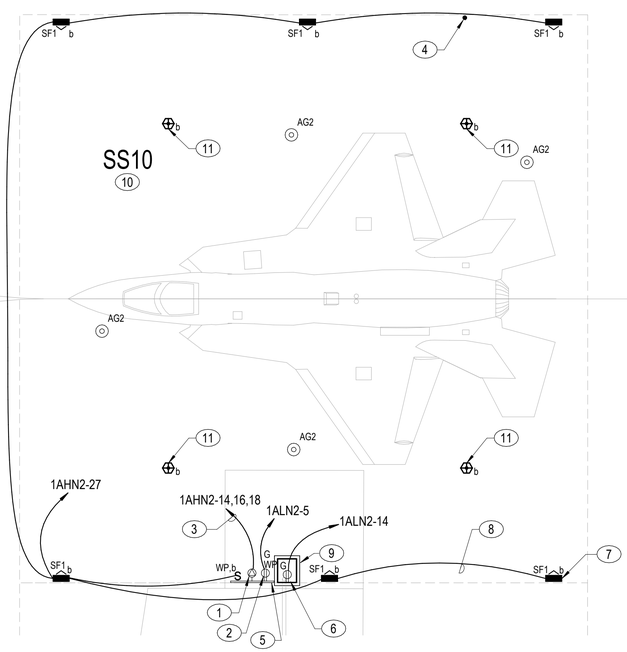

A1 ELECTRICAL SITE PLAN - TYPICAL SHADE STRUCTURES - SS5, SS10

1/8" = 1'-0"

PLAN NORTH

N

0 5' 10' 20' 30'

1/8" = 1'-0" GRAPHIC SCALE

NOTE:
IF THIS DRAWING IS LESS THAN 34" X 22"
IT IS A REDUCED SIZE DRAWING

SYM	DESCRIPTION	DATE	APPR
1	MOD P00005	05/2023	
2	MOD P00006 AND P00007	10/2025	

NAVFAC

NICHOLAS G. ZUBRZYCKI LICENSE No 64299 STATE OF FLORIDA PROFESSIONAL ENGINEER

BAMFORTH ENGINEERS - ARCHITECTS

AE INFO

APPROVED

FOR COMMANDER NAVFAC 11/21/2022

ACTIVITY: Approved by J. Scott Roberts, Asset Management Branch Head & Supervisory Facility Planner, PWD Beaufort, SC via email.

SATISFACTORY TO DATE 12/15/2022

DES RLW	DRW RLW	CHK KLM	
PM/DM	KTB / RLH		
BRANCH MANAGER	JAS		
CHIEF ENG/ARCH	EJA		
FP ENGINEER	DSN		

NAVAL FACILITIES ENGINEERING SYSTEMS COMMAND
NORFOLK, VA

DEPARTMENT OF THE NAVY
NAVAL FACILITIES ENGINEERING SYSTEMS COMMAND ~ MID-ATLANTIC
DC CORE
MCAS BEAUFORT

BEAUFORT, SC
P-475 AIRCRAFT MAINTENANCE HANGAR - VOLUME 1 (BASE BID WITH OPTIONS)

ENLARGED SITE PLANS

SCALE: 1/8" = 1'-0"

EPROJECT NO.: 1363603

CONSTR. CONTR. NO.

NAVFAC DRAWING NO. 12859373

SHEET 201 OF 1412

ES405

DRAWFORM REVISION: 28 AUGUST 2020

Autodesk Docs://20240_NAFA T 502 F35 Maintenance Hangar/20240_F35 maintHangar_Site Bid Option EL-R17.2024.rvt
11/12/2025 11:49:03 AM

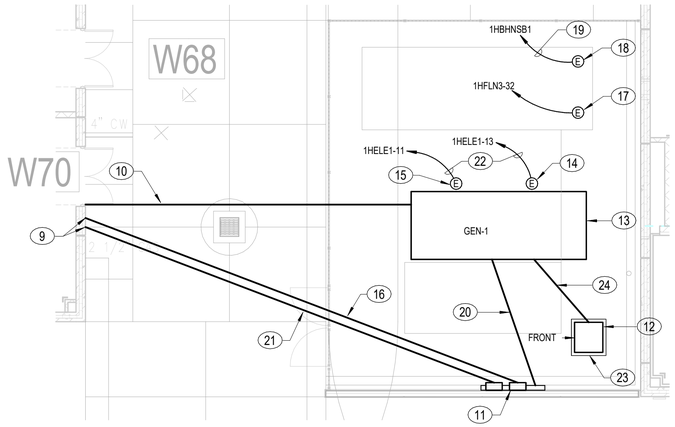

C1 ENLARGED GENERATOR EQUIPMENT YARD
1/8" = 1'-0"

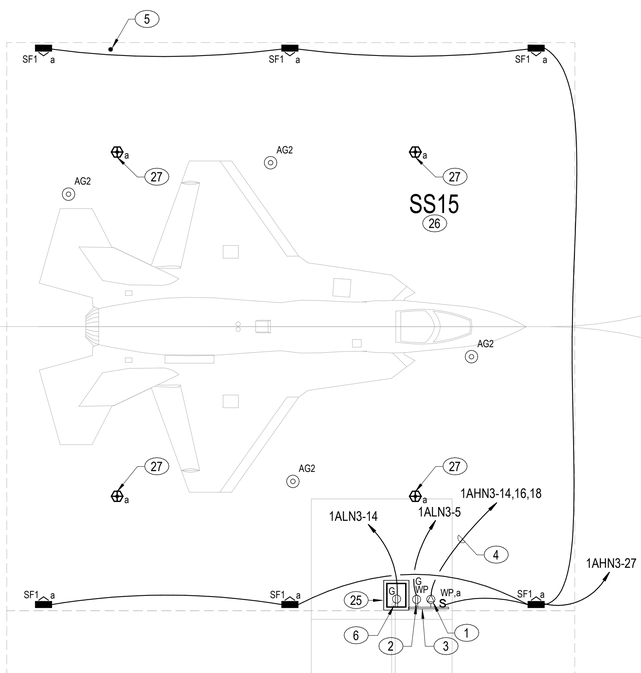

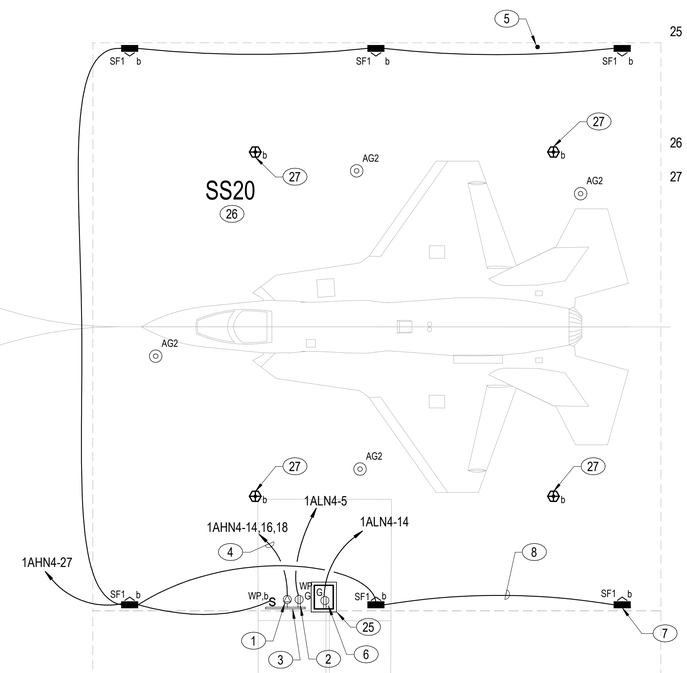

A1 ELECTRICAL SITE PLAN - TYPICAL SHADE STRUCTURES - SS15, SS20
1/8" = 1'-0"

NOTES:

KEY NOTES (00)

1 HEAVY DUTY, CLASS L, 480V, 3 PHASE, 3 WIRE, 100A, WEATHERPROOF RECEPTACLE FOR AIRCRAFT SERVICE EQUIPMENT. MOUNT AT 48"AFF TO BOTTOM. AMPHENOL #MS90555C44150S IN IP56 ENCLOSURE. ORIENT RECEPTACLE AT A 45 DEGREE DOWNWARD SLOPE.

2 20A, 125V DUPLEX RECEPTACLE WITH WEATHERPROOF, CAST ALUMINUM IN-USE COVER.

3 EQUIPMENT MOUNTING RACK. SEE A4/ES505 FOR TYPICAL DETAIL.

4 2"C - 3#3 + 1#6 GND.

5 ¾" X 10' LONG COPPER CLAD STEEL DRIVEN GROUND ROD FOR SHADE STRUCTURE LIGHTNING PROTECTION SYSTEM DOWN CONDUCTOR. GROUND ROD WILL EXTEND 4" ABOVE THE FINISHED CONCRETE SURFACE FOR CONDUCTOR CONNECTION. LIGHTNING PROTECTION SYSTEM IS PROVIDED WITH SHADE STRUCTURE. LOCATE THE GROUND ROD IMMEDIATELY ADJACENT TO ONE OF THE SHADE STRUCTURE COLUMNS, COORDINATE THE INSTALLATION WITH THE GOVERNMENT.

6 TELECOMMUNICATIONS ENCLOSURE. PROVIDE 20A, 125V DUPLEX RECEPTACLE IN THE ENCLOSURE. COORDINATE EXACT MOUNTING LOCATION WITH ENCLOSURE INSTALLER.

7 MOUNT FIXTURE TO THE STRUCTURAL STEEL MEMBERS OF THE SHADE STRUCTURE AT 10'-0" ABOVE THE APRON SURFACE, AIM FIXTURE TO PROVIDE MAXIMUM ILLUMINATION AT AIRCRAFT PARKING LOCATION. TYPICAL.

8 ROUTE THE LIGHTING FIXTURE CONDUITS ON THE SHADE STRUCTURE. FASTEN TO THE STRUCTURAL STEEL ELEMENTS OF THE SHADE STRUCTURE.

9 EXTEND TO BOTTOM OF ATS-E1 AND ATS-O1. SEE A1/EP401 IN VOLUME 2B FOR LOCATION. SEE SHEET EP602 IN VOLUME 2B FOR SINGLE LINE DIAGRAM.

10 2" SCHEDULE 80 PVC CONDUIT FOR GENERATOR REMOTE ALARM PANEL WIRING, BURY AT 24" BELOW FINISHED GRADE. SEE SHEET EP602 IN VOLUME 2B FOR ADDITIONAL INFORMATION.

11 ATS- E1 AND ATS-O1 ENCLOSED CIRCUIT BREAKERS MOUNTED ABOVE WEATHERPROOF TAP GUTTER AT 72" ABOVE EQUIPMENT YARD CONCRETE SLAB TO TOP.. SEE SHEET EP602 IN VOLUME 2 FOR ADDITIONAL INFORMATION AND CONNECTION REQUIREMENTS.

12 LOAD BANK QUICK CONNECT CABINET. SEE SHEET EP602 IN VOLUME 2 FOR ADDITIONAL INFORMATION AND CONNECTION REQUIREMENTS.

13 SEE B1/ES501 FOR GENERATOR PAD DETAIL.

14 CONNECTION TO GENERATOR BLOCK HEATER. FED FROM THE HANGAR BUILDING.

15 CONNECTION TO GENERATOR BATTERY CHARGER. FED FROM THE HANGAR BUILDING.

16 UNDERGROUND FEEDER BETWEEN CIRCUIT BREAKER CB-ATS-O1 AND ATS-O1. BURY AT 24" BELOW FINISHED GRADE. PROVIDE 3" OF CONCRETE ALL AROUND CONDUIT. SEE SHEET EP602 IN VOLUME 2 FOR CONDUIT AND WIRE SIZE.

17 CONNECTION TO CHILLER CH/1 CONTROL PANEL. FED FROM THE HANGAR BUILDING.

18 CONNECTION TO CHILLER CH/1. FED FROM THE HANGAR BUILDING.

19 SEE SHEET EP601 IN VOLUME 2B FOR CONDUIT AND WIRE SIZE.

20 UNDERGROUND FEEDER BETWEEN GENERATOR AND TAP GUTTER. BURY AT 24" BELOW FINISHED GRADE. SEE SHEET EP602 IN VOLUME 2B FOR CONDUIT AND WIRE SIZE.

21 UNDERGROUND FEEDER BETWEEN CIRCUIT BREAKER CB-ATS-E1 AND ATS-E1. BURY AT 24" BELOW FINISHED GRADE. PROVIDE 3" OF CONCRETE ALL AROUND CONDUIT. SEE SHEET EP602 IN VOLUME 2B FOR CONDUIT AND WIRE SIZE.

22 1"C - (2)#10 + (1)#10 GND. WIRE SIZE WAS INCREASED DUE TO VOLTAGE DROP.

23 4" HIGH CONCRETE HOUSEKEEPING PAD. EXTEND 4" BEYOND EQUIPMENT ON ALL EXPOSED EDGES AND PROVIDE 1/2" BEVEL. APPLY TWO COATS OF SAFETY YELLOW PAINT ON ALL EXPOSED SURFACES.

24 UNDERGROUND FEEDER BETWEEN GENERATOR AND LOAD BANK QUICK CONNECT. BURY AT 24" BELOW FINISHED GRADE. SEE SHEET EP602 IN VOLUME 2B FOR CONDUIT AND WIRE SIZE.

25 6" HIGH REINFORCED CONCRETE PAD WITH 1/2" HIGH BEVEL ON ALL EDGES. EXTEND PAD 4" BEYOND EQUIPMENT ON ALL SIDES, COORDINATE THE PAD DIMENSIONS WITH THE TELECOMMUNICATIONS ENCLOSURE AND DC CONVERTER. PROVIDE DOWELS TO ANCHOR THE PAD TO THE CONCRETE APRON. ALL EQUIPMENT WILL BE RIGIDLY MOUNTED TO THE CONCRETE PAD WITH EXPANSION TYPE ANCHORS.

26 SHADE STRUCTURE LIGHT FIXTURES WILL BE CONTROLLED VIA LOCAL ON/OFF SWITCH AND LOCAL OCCUPANCY SENSORS.

27 CEILING-SURFACE MOUNTED, 277V, PASSIVE INFRARED, OCCUPANCY SENSOR FOR USE IN OUTDOOR WET LOCATION. SENSOR WILL BE PROGRAMMED AS AUTO ON/ AUTO OFF TIME DELAY WITH A 30 MINUTE VACANCY TIMEOUT.

PLAN NORTH N

0 5' 10' 20' 30'
1/8" = 1'-0" GRAPHIC SCALE

NOTE:
IF THIS DRAWING IS LESS THAN 34" X 22"
IT IS A REDUCED SIZE DRAWING

STM	DESCRIPTION	DATE	APPR
1	MOD P00005	05/2023	
2	MOD P00006 AND P00007	10/2025	

NAVFAC

NICHOLAS G. ZUBRZYCKI LICENSED No 64299 STATE OF FLORIDA PROFESSIONAL ENGINEER

BAMFORTH ENGINEERS ARCHITECTS

AE INFO

APPROVED
FOR COMMANDER NAVFAC 11/21/2022

ACTIVITY: Approved by J. Scott Roberts, Asset Management Branch Head & Supervisory Facility Planner, PWD Beaufort, SC via email.

SATISFACTORY TO DATE 12/15/2022

DES RLW	DRW RLW	CHK KLM	
PM/DM	KTB / RLH		
BRANCH MANAGER	JAS		
CHIEF ENG/ARCH	EJA		
FP ENGINEER	DSN		

DEPARTMENT OF THE NAVY
NAVAL FACILITIES ENGINEERING SYSTEMS COMMAND
DC CORE:
MCAS BEAUFORT

NAVAL FACILITIES ENGINEERING SYSTEMS COMMAND ~ MID-ATLANTIC
NORFOLK, VA

BEAUFORT, SC

P-475 AIRCRAFT MAINTENANCE HANGAR - VOLUME 1 (BASE BID WITH OPTIONS)

ENLARGED SITE PLANS

SCALE: 1/8" = 1'-0"
EPROJECT NO.: 1363603
CONSTR. CONTR. NO.
NAVFAC DRAWING NO. 12859374
SHEET 202 OF 1412

ES406

DRAWFORM REVISION: 25 AUGUST 2020

Autodesk Docs://20242 \ MF-A1 202 F35 Maintenance Hangar/20242 F35 main Hangar_Site Bid Option EL.RVT3024.rvt
11/12/2025 11:48:11 AM

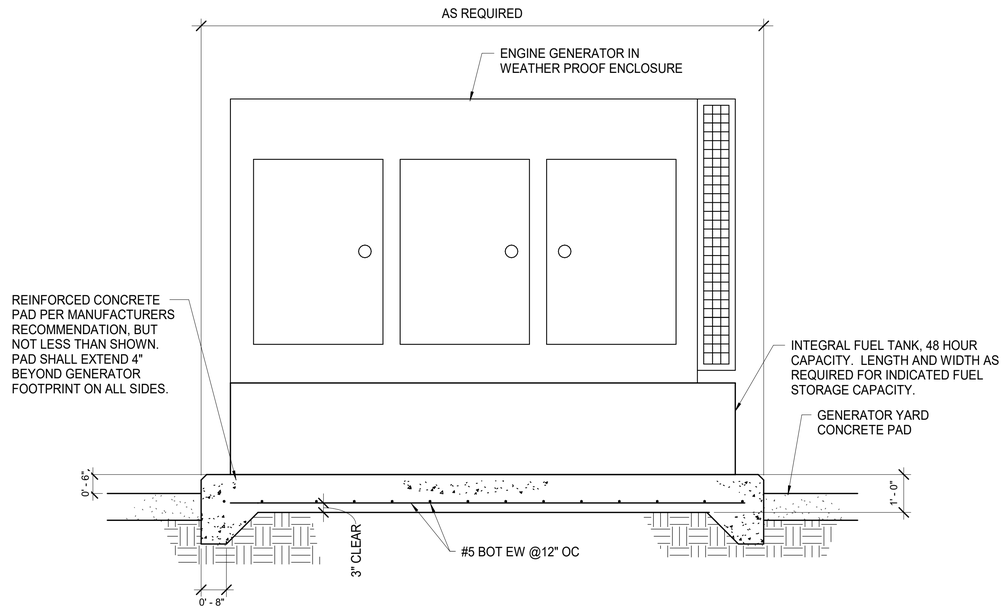

B1 GENERATOR PAD DETAIL

NOT TO SCALE

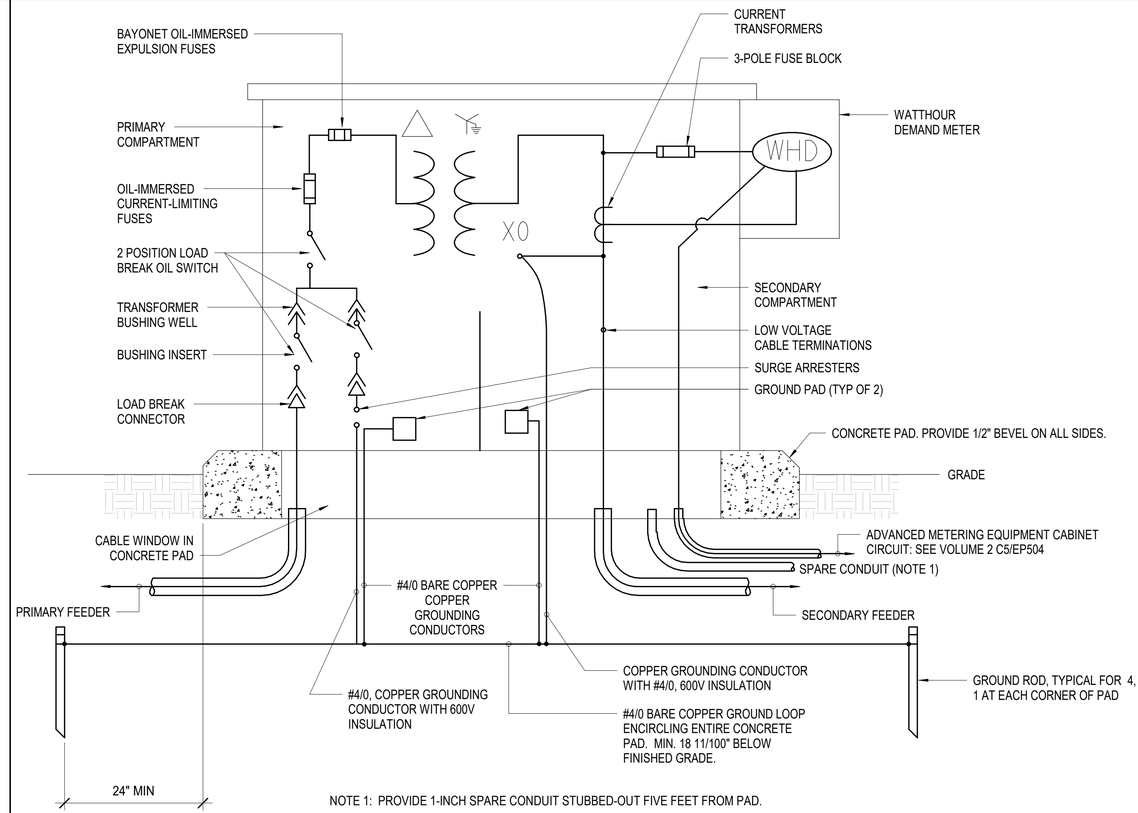

NOTE 1: PROVIDE 1-INCH SPARE CONDUIT STUBBED-OUT FIVE FEET FROM PAD.

B3 PAD MOUNTED TRANSFORMER DETAIL

NOT TO SCALE

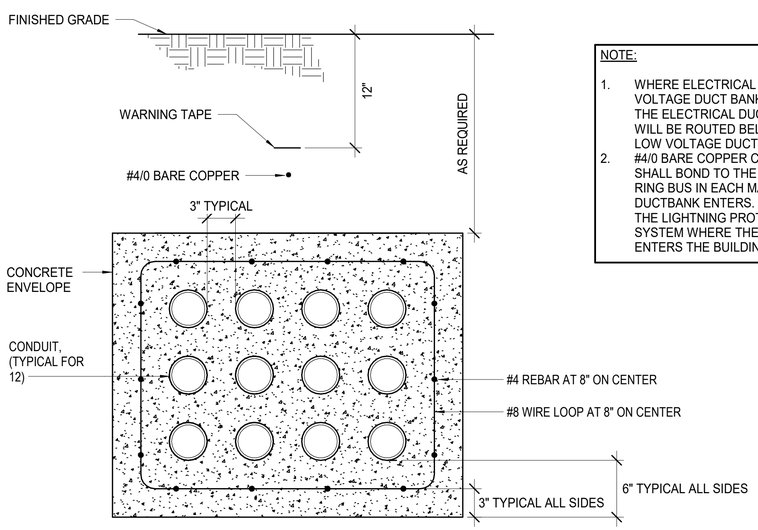

NOTE:

1. WHERE ELECTRICAL AND LOW VOLTAGE DUCT BANKS CROSS, THE ELECTRICAL DUCT BANK WILL BE ROUTED BELOW THE LOW VOLTAGE DUCT BANK.
2. #4/0 BARE COPPER CONDUCTOR SHALL BOND TO THE GROUND RING BUS IN EACH MANHOLE THE DUCTBANK ENTERS. BOND TO THE LIGHTNING PROTECTION SYSTEM WHERE THE DUCTBANK ENTERS THE BUILDING.

A1 12-WAY DUCT BANK DETAIL

NOT TO SCALE

NOTE:
IF THIS DRAWING IS LESS THAN 34" X 22"
IT IS A REDUCED SIZE DRAWING

STM	DESCRIPTION	DATE	APPR
1	MOD P00005	05/2023	
2	MOD P00006 AND P00007	10/2025	

NAVFAC

NICHOLAS G. ZUBRZYCKI LICENSED No 64299 STATE OF FLORIDA PROFESSIONAL ENGINEER

BAMFORTH ENGINEERS - ARCHITECTS

APPROVED
FOR COMMANDER NAVFAC 11/21/2022

ACTIVITY: Approved by J. Scott Roberts, Asset Management Branch Head & Supervisory Facility Planner, PWD Beaufort, SC via email.

SATISFACTORY TO DATE	12/15/2022
DES RLW / DRW RLW / CHK KLM	
PM/DM	KTB / RLH
BRANCH MANAGER	JAS
CHIEF ENG/ARCH	EJA
FP ENGINEER	DSN

DEPARTMENT OF THE NAVY
NAVAL FACILITIES ENGINEERING SYSTEMS COMMAND
DC CORE
NAVAL FACILITIES ENGINEERING SYSTEMS COMMAND – MID-ATLANTIC
NORFOLK, VA
MCAS BEAUFORT
BEAUFORT, SC
P-475 AIRCRAFT MAINTENANCE HANGAR - VOLUME 1 (BASE BID WITH OPTIONS)
SITE DETAILS

SCALE:	As indicated
EPROJECT NO.:	1363603
CONSTR. CONTR. NO.	
NAVFAC DRAWING NO.	12859375
SHEET	203 OF 1412

ES501

DRAWFORM REVISION: 25 AUGUST 2020

Autodesk Docs://20042 MFA1 502 F35 Maintenance Hangar/20042 F35 maint Hangar_Site Bid Option EL-R17/20241.rvt
11/12/2025 11:46:18 AM

MANHOLE DETAIL GENERAL NOTES:

A. DUCT BANK ENTRANCES ARE SHOWN IN A DIAGRAMMATIC MANNER ONLY. REFER TO THE SITE PLANS AND DUCT BANK SCHEDULES FOR THE ACTUAL DUCT BANK ENTRANCE REQUIREMENTS FOR EACH MANHOLE. THE EXACT ENTRANCE LOCATIONS WILL BE AS REQUIRED TO SUIT THE SITE CONDITIONS.
B. ALL FASTENERS USED WITH THE MANHOLE WILL BE STAINLESS STEEL.
C. REFER TO A3/ES502 FOR MANHOLE HARDWARE DETAIL.
D. REFER TO C5/ES502 FOR MANHOLE GROUNDING DETAIL.

UTILITY STRUCTURES LOCATED WITHIN APRONS WILL BE RATED FOR 100,000LB WHEEL LOAD MINIMUM.

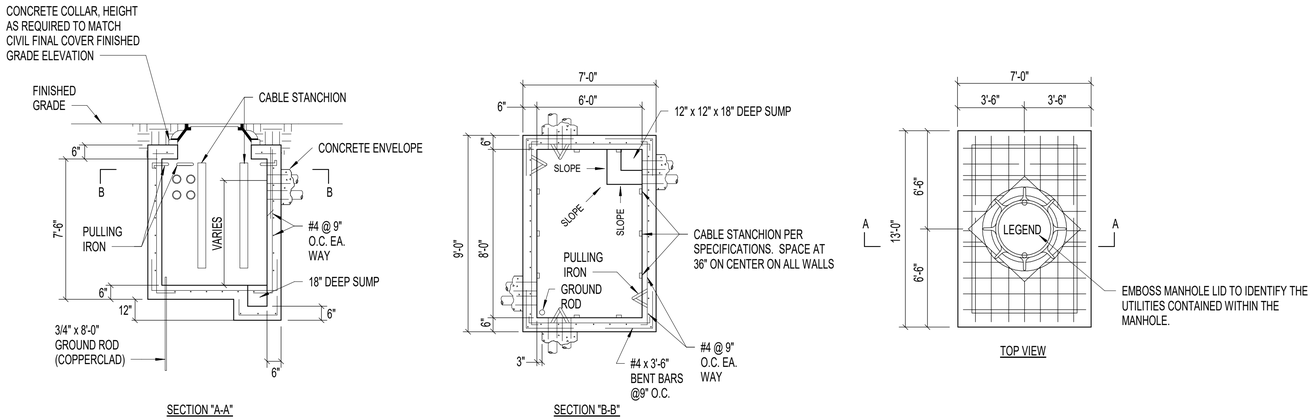

C3 ELECTRICAL MANHOLE DETAIL

NOT TO SCALE

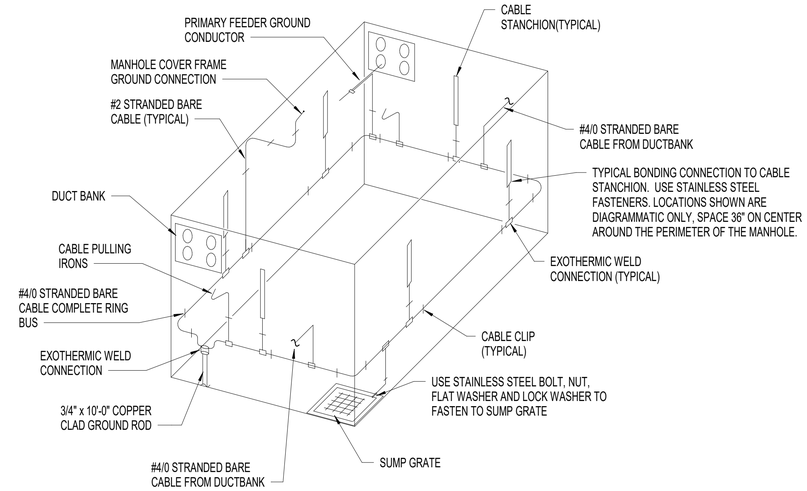

C5 TYPICAL MANHOLE GROUNDING DETAIL

NOT TO SCALE

MANHOLE COVERS AND FRAMES LOCATED WITHIN APRONS AND TOWWAYS WILL BE RATED FOR 100,000LB WHEEL LOAD MINIMUM.

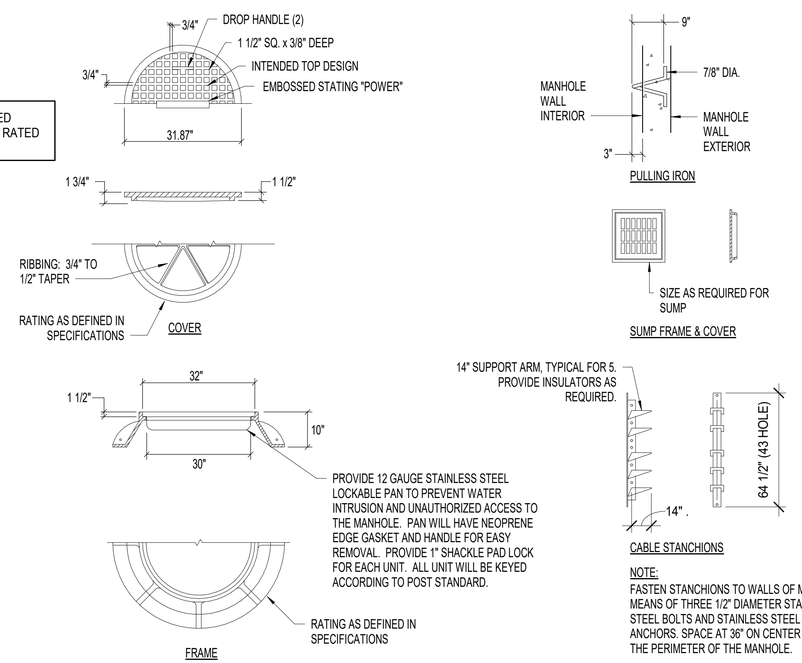

NOTE:
FASTEN STANCHIONS TO WALLS OF MANHOLE BY MEANS OF THREE 1/2" DIAMETER STAINLESS STEEL BOLTS AND STAINLESS STEEL EXPANSION ANCHORS. SPACE AT 36" ON CENTER AROUND THE PERIMETER OF THE MANHOLE.

A3 TYPICAL MANHOLE HARDWARE DETAIL

NOT TO SCALE

LIGHTING HANDHOLE
12"W x 18"L x 18"DP

ELECTRICAL HANDHOLE
12"W x 18"L x 18"DP

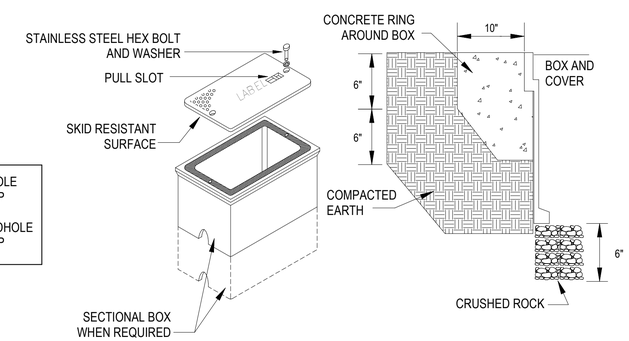

HANDHOLE REQUIREMENTS:

1. HOUSING SHALL BE A POLYMER CONCRETE REINFORCED WITH A HEAVY WEAVE FIBERGLASS REINFORCING WITH COMPRESSIVE STRENGTH OF NO LESS THAN 10,000 PSI.
2. COVER AND BOX SHALL WITHSTAND A SERVICE LOAD OF NO LESS THAN 22,500 LBS. OVER A 10" x 20" AREA AND MUST PASS A STATIC LOAD TEST OF 2,500 LBS.
3. PROVIDE STAINLESS STEEL BOLTS AND INSERTS.
4. PROVIDE WITH (2) 2 1/2" MOUSEHOLES.
5. PROVIDE LABEL STATING "LIGHTING" FOR LIGHTING CIRCUIT HANDHOLES. PROVIDE LABEL STATING "ELECTRICAL" FOR ELECTRICAL CIRCUIT HANDHOLES.
6. PROVIDE TIER 22 RATING PER ANSI/ SCTE 77.

A5 TYPICAL ELECTRICAL HANDHOLE DETAIL

NOT TO SCALE

NOTE:
IF THIS DRAWING IS LESS THAN 34" X 22"
IT IS A REDUCED SIZE DRAWING

STM	DESCRIPTION	DATE	APPR
1	MOD P00005	05/2023	
2	MOD P00006 AND P00007	10/2025	

NAVFAC

NICHOLAS G. ZUBRZYCKI LICENSED No 64299 STATE OF FLORIDA PROFESSIONAL ENGINEER

BAMFORTH ENGINEERS & CONTRACTORS

AE INFO

APPROVED
FOR COMMANDER NAVFAC 11/21/2022

ACTIVITY
Approved by J. Scott Roberts, Asset Management Branch Head & Supervisory Facility Planner, PWD Beaufort, SC via email.

SATISFACTORY TO DATE 12/15/2022

DES RLW	DRW RLW	CHK KLM	
PMDM		KTB / RLH	
BRANCH MANAGER		JAS	
CHIEF ENG/ARCH		EJA	
FP ENGINEER		DSN	

DEPARTMENT OF THE NAVY
NAVAL FACILITIES ENGINEERING SYSTEMS COMMAND ~ MID-ATLANTIC
NORFOLK, VA
DC CORE:
MCAS BEAUFORT
BEAUFORT, SC
P-475 AIRCRAFT MAINTENANCE HANGAR - VOLUME 1 (BASE BID WITH OPTIONS)
SITE DETAILS

SCALE: As indicated
EPROJECT NO.: 1363603
CONSTR. CONTR. NO.
NAVFAC DRAWING NO. 12859376
SHEET 204 OF 1412

ES502

DRAWFORM REVISION: 25 AUGUST 2020

Autodesk Docs://20042 VAF A1 520 F35 Maintenance Hangar/20042 F35 main Hangar_Site Bid Option EL R17.3224.rvt
11/12/2025 11:49:25 AM

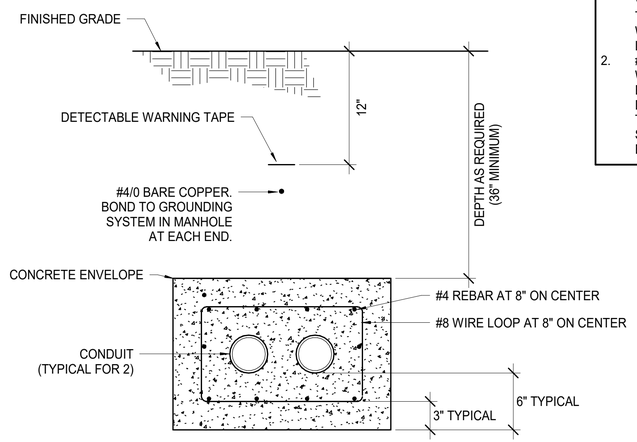

NOTE:

1. WHERE ELECTRICAL AND LOW VOLTAGE DUCT BANKS CROSS, THE ELECTRICAL DUCT BANK WILL BE ROUTED BELOW THE LOW VOLTAGE DUCT BANK.
2. #4/0 BARE COPPER CONDUCTOR WILL BOND TO THE GROUND RING BUS IN EACH MANHOLE THE DUCTBANK ENTERS. BOND TO THE LIGHTNING PROTECTION SYSTEM WHERE THE DUCTBANK ENTERS THE BUILDING.

C2 2-WAY CONCRETE REINFORCED POWER DUCT BANK DETAIL

NOT TO SCALE

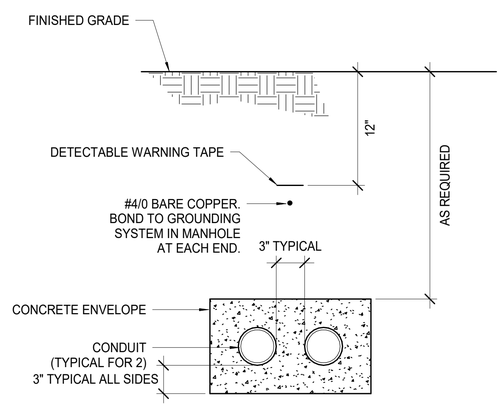

NOTE:

1. WHERE ELECTRICAL AND LOW VOLTAGE DUCT BANKS CROSS, THE ELECTRICAL DUCT BANK WILL BE ROUTED BELOW THE LOW VOLTAGE DUCT BANK.
2. #4/0 BARE COPPER CONDUCTOR WILL BOND TO THE GROUND RING BUS IN EACH MANHOLE THE DUCTBANK ENTERS. BOND TO THE LIGHTNING PROTECTION SYSTEM WHERE THE DUCTBANK ENTERS THE BUILDING.

A2 2-WAY DUCT BANK DETAIL

NOT TO SCALE

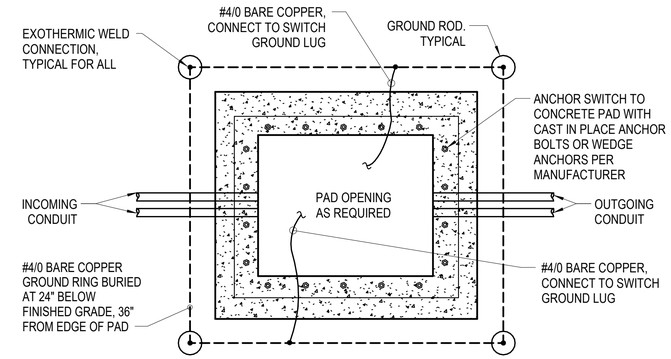

PAD PLAN

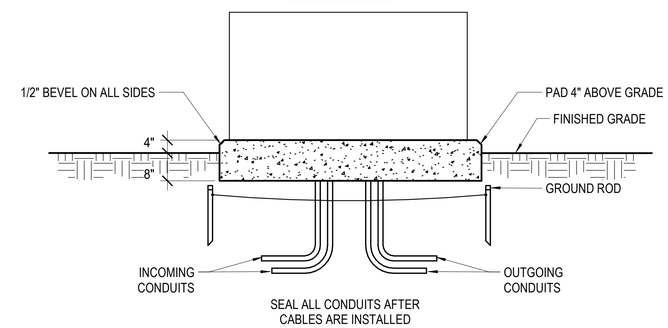

PAD SECTION

B4 PAD MOUNTED SWITCH PAD AND GROUNDING DETAIL

NOT TO SCALE

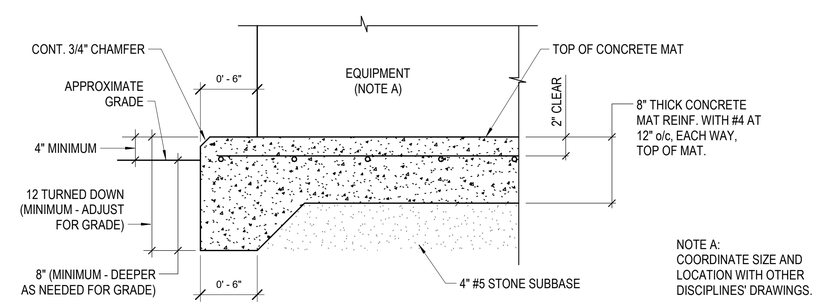

NOTE A:
COORDINATE SIZE AND LOCATION WITH OTHER DISCIPLINES' DRAWINGS.

A4 TYPICAL EXTERIOR EQUIPMENT PAD DETAIL

NOT TO SCALE

NOTE:
IF THIS DRAWING IS LESS THAN 34" X 22"
IT IS A REDUCED SIZE DRAWING

NO	DESCRIPTION	DATE	APPR
1	MOD P00005	05/2023	
2	MOD P00006 AND P00007	10/2025	

NAVFAC

NICHOLAS G. ZUBRZYCKI
LICENSE No 64299
STATE OF FLORIDA
PROFESSIONAL ENGINEER

BAMFORTH ENGINEERS CONTRACTORS

APPROVED
FOR COMMANDER NAVFAC 11/21/2022

ACTIVITY
Approved by J. Scott Roberts,
Asset Management Branch Head &
Supervisory Facility Planner, PWD
Beaufort, SC via email.

SATISFACTORY TO DATE	12/15/2022
DES RLW / DRW RLW / CHK KLM	
PMDM	KTB / RLH
BRANCH MANAGER	JAS
CHIEF ENG/ARCH	EJA
FP ENGINEER	DSN

DEPARTMENT OF THE NAVY
NAVAL FACILITIES ENGINEERING SYSTEMS COMMAND ~ MID-ATLANTIC
NORFOLK, VA
DC CORE:
MCAS BEAUFORT
BEAUFORT, SC
P-475 AIRCRAFT MAINTENANCE HANGAR - VOLUME 1 (BASE BID WITH OPTIONS)
SITE DETAILS

SCALE: As indicated
EPROJECT NO.: 1363603
CONSTR. CONTR. NO.
NAVFAC DRAWING NO. 12859377
SHEET 205 OF 1412
ES503

DRAWFORM REVISION: 25 AUGUST 2020

Autodesk Docs://2042 VAF A1 320 F3 Maintenance Hangar/2042 F3 maint Hangar_Site Bid Option EL R17.3224.rvt
11/12/2025 11:49:32 AM

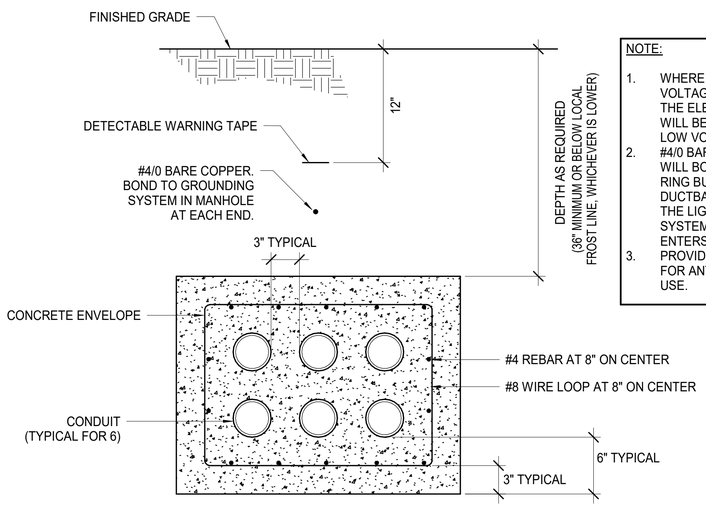

NOTE:

1. WHERE ELECTRICAL AND LOW VOLTAGE DUCT BANKS CROSS, THE ELECTRICAL DUCT BANK WILL BE ROUTED BELOW THE LOW VOLTAGE DUCT BANK.
2. #4/0 BARE COPPER CONDUCTOR WILL BOND TO THE GROUND RING BUS IN EACH MANHOLE THE DUCTBANK ENTERS. BOND TO THE LIGHTNING PROTECTION SYSTEM WHERE THE DUCTBANK ENTERS THE BUILDING.
3. PROVIDE NYLON PULL STRING FOR ANY SPARE DUCTS NOT IN USE.

C2 6-WAY CONCRETE REINFORCED POWER DUCT BANK DETAIL

NOT TO SCALE

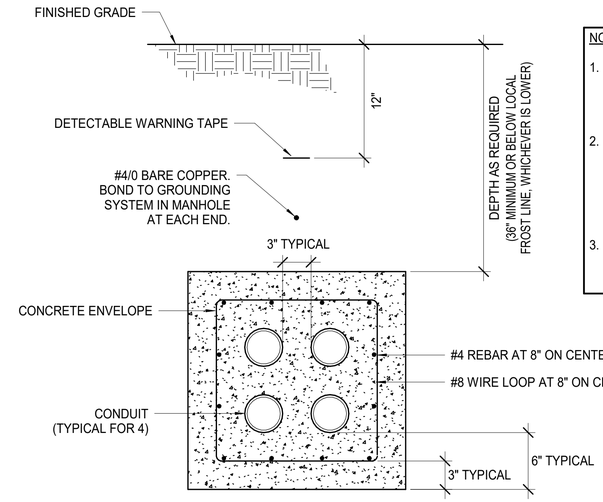

NOTE:

1. WHERE ELECTRICAL AND LOW VOLTAGE DUCT BANKS CROSS, THE ELECTRICAL DUCT BANK WILL BE ROUTED BELOW THE LOW VOLTAGE DUCT BANK.
2. #4/0 BARE COPPER CONDUCTOR WILL BOND TO THE GROUND RING BUS IN EACH MANHOLE THE DUCTBANK ENTERS. BOND TO THE LIGHTNING PROTECTION SYSTEM WHERE THE DUCTBANK ENTERS THE BUILDING.
3. PROVIDE NYLON PULL STRING FOR ANY SPARE DUCTS NOT IN USE.

C4 4-WAY CONCRETE REINFORCED POWER DUCT BANK DETAIL

NOT TO SCALE

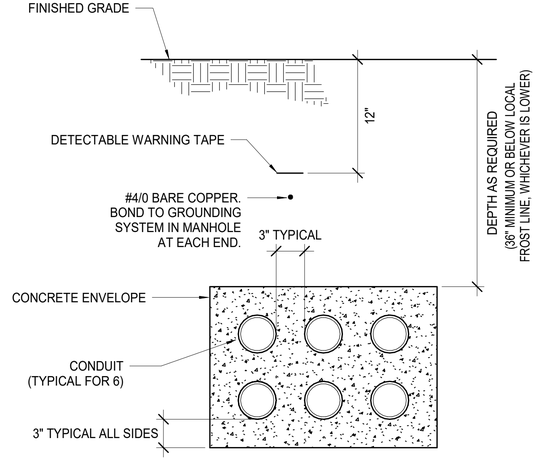

NOTE:

1. WHERE ELECTRICAL AND LOW VOLTAGE DUCT BANKS CROSS, THE ELECTRICAL DUCT BANK WILL BE ROUTED BELOW THE LOW VOLTAGE DUCT BANK.
2. #4/0 BARE COPPER CONDUCTOR WILL BOND TO THE GROUND RING BUS IN EACH MANHOLE THE DUCTBANK ENTERS. BOND TO THE LIGHTNING PROTECTION SYSTEM WHERE THE DUCTBANK ENTERS THE BUILDING.
3. PROVIDE NYLON PULL STRING FOR ANY SPARE DUCTS NOT IN USE.

A2 6-WAY DUCT BANK DETAIL

NOT TO SCALE

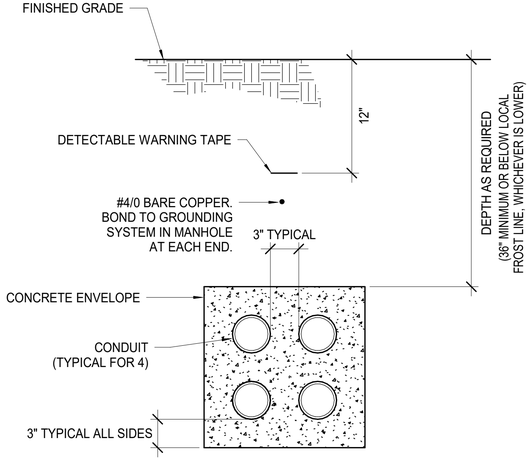

NOTE:

1. WHERE ELECTRICAL AND LOW VOLTAGE DUCT BANKS CROSS, THE ELECTRICAL DUCT BANK WILL BE ROUTED BELOW THE LOW VOLTAGE DUCT BANK.
2. #4/0 BARE COPPER CONDUCTOR WILL BOND TO THE GROUND RING BUS IN EACH MANHOLE THE DUCTBANK ENTERS. BOND TO THE LIGHTNING PROTECTION SYSTEM WHERE THE DUCTBANK ENTERS THE BUILDING.
3. PROVIDE NYLON PULL STRING FOR ANY SPARE DUCTS NOT IN USE.

A4 4-WAY DUCT BANK DETAIL

NOT TO SCALE

NOTE:
IF THIS DRAWING IS LESS THAN 34" X 22"
IT IS A REDUCED SIZE DRAWING

SYM	DESCRIPTION	DATE	APPR
1	MOD P00005	05/2023	
2	MOD P00006 AND P00007	10/2025	

NAVFAC

NICHOLAS G. ZUBRZYCKI LICENSE No 64299 STATE OF FLORIDA PROFESSIONAL ENGINEER

BAMFORTH ENGINEERS & CONTRACTORS

AE INFO

APPROVED
FOR COMMANDER NAVFAC 11/21/2025

ACTIVITY: Approved by J. Scott Roberts, Asset Management Branch Head & Supervisory Facility Planner, PWD Beaufort, SC via email.

SATISFACTORY TO DATE 12/15/2022

DES RLW	DRW RLW	CHK KLM	
PM/DM	KTB / RLH		
BRANCH MANAGER	JAS		
CHIEF ENG/ARCH	EJA		
FP ENGINEER	DSN		

NAVAL FACILITIES ENGINEERING SYSTEMS COMMAND
NORFOLK, VA

DEPARTMENT OF THE NAVY
NAVAL FACILITIES ENGINEERING SYSTEMS COMMAND ~ MID-ATLANTIC
DC CORE
MCAS BEAUFORT
BEAUFORT, SC
P-475 AIRCRAFT MAINTENANCE HANGAR - VOLUME 1 (BASE BID WITH OPTIONS)
SITE DETAILS

SCALE: 1 1/2" = 1'-0"
EPROJECT NO.: 1363603
CONSTR. CONTR. NO.
NAVFAC DRAWING NO. 12859378
SHEET 206 OF 1412

ES504

DRAWFORM REVISION: 25 AUGUST 2020

Autodesk Docs://2040_NAVFAC SE/ FS5 Maintenance Hangar/2040_FS5 Maintenance Hangar_Site Bid Option EL-R17.2024.rvt
11/12/2025 11:49:39 AM

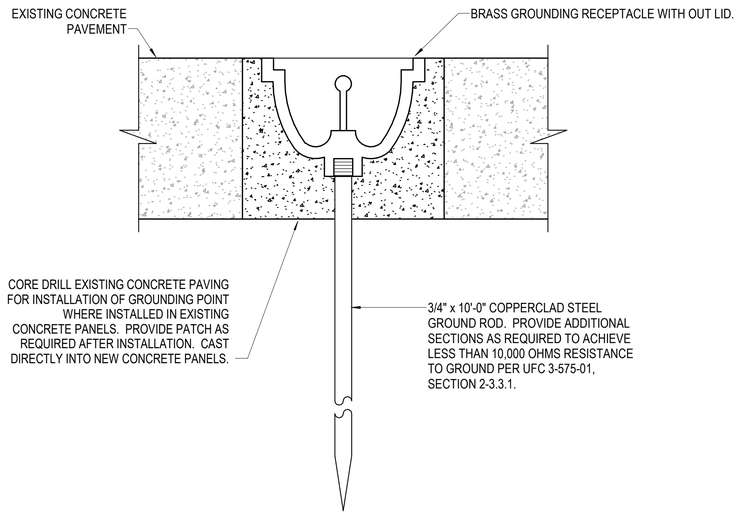

B2 AIRCRAFT GROUND POINT - SUNSHADE

NOT TO SCALE

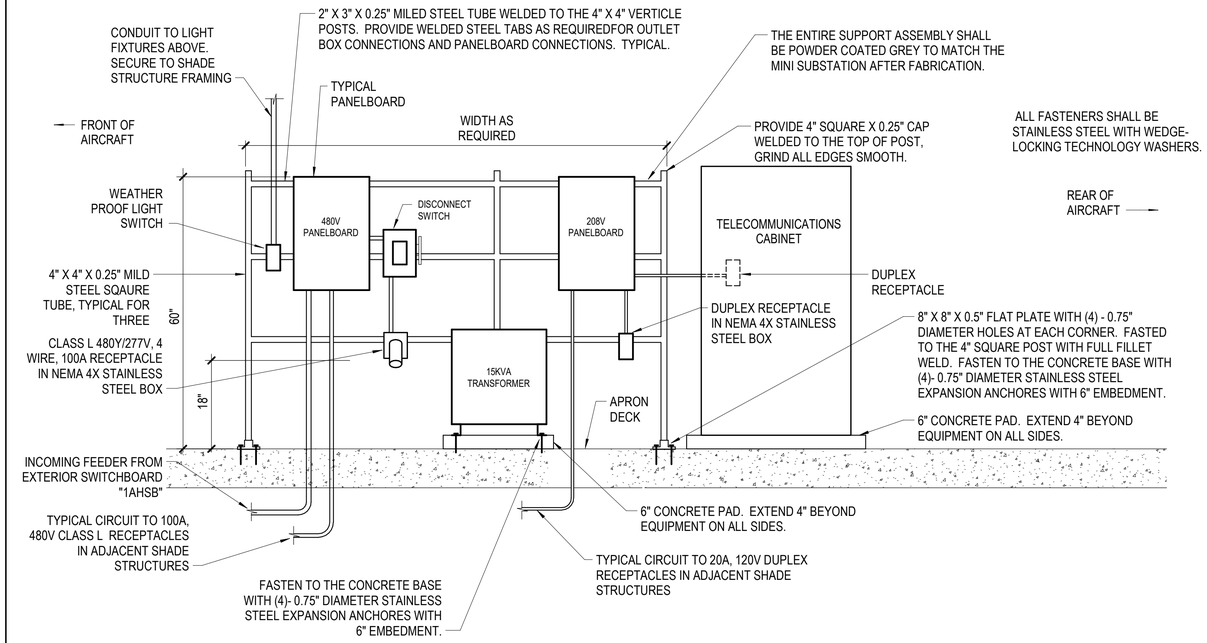

B4 APRON EQUIPMENT MOUNTING RACK DETAIL WITH PANELBOARDS

NOT TO SCALE

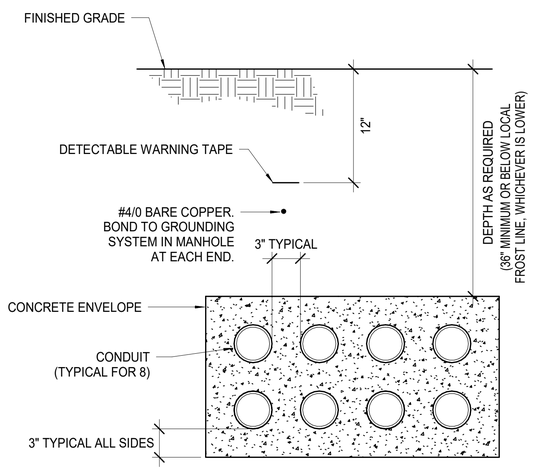

NOTE:

1. WHERE ELECTRICAL AND LOW VOLTAGE DUCT BANKS CROSS, THE ELECTRICAL DUCT BANK WILL BE ROUTED BELOW THE LOW VOLTAGE DUCT BANK.
2. #4/0 BARE COPPER CONDUCTOR WILL BOND TO THE GROUND RING BUS IN EACH MANHOLE THE DUCTBANK ENTERS. BOND TO THE LIGHTNING PROTECTION SYSTEM WHERE THE DUCTBANK ENTERS THE BUILDING.
3. PROVIDE NYLON PULL STRING FOR ANY SPARE DUCTS NOT IN USE.

A2 8-WAY DUCT BANK DETAIL

NOT TO SCALE

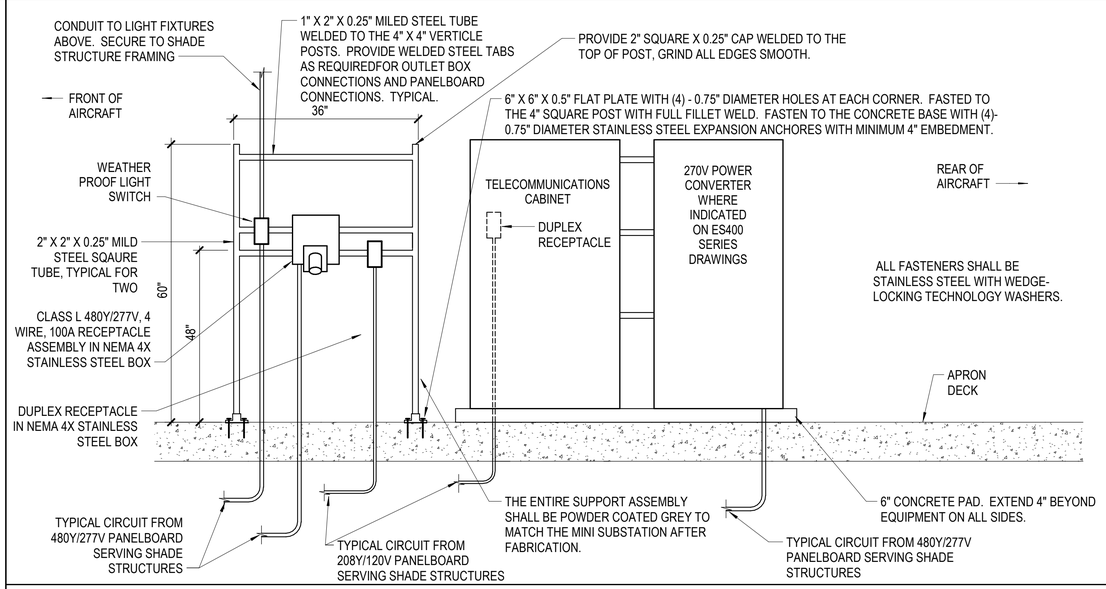

A4 APRON EQUIPMENT MOUNTING RACK DETAIL NO PANELBOARDS

NOT TO SCALE

NOTE:
IF THIS DRAWING IS LESS THAN 34" X 22"
IT IS A REDUCED SIZE DRAWING

1	MOD P00005	05/2023	
2	MOD P00006 AND P00007	10/2025	

STM DESCRIPTION DATE APPR

NAVFAC

NICHOLAS G. ZUBRZYCKI LICENSED No 64299 STATE OF FLORIDA PROFESSIONAL ENGINEER

BAMFORTH ENGINEERS ARCHITECTS

AE INFO

APPROVED

FOR COMMANDER NAVFAC 11/21/2022

ACTIVITY: Approved by J. Scott Roberts, Asset Management Branch Head & Supervisory Facility Planner, PWD Beaufort, SC via email.

SATISFACTORY TO DATE	12/15/2022
DES RLW / DRW RLW	CHK KLM
PMDM	KTB / RLH
BRANCH MANAGER	JAS
CHIEF ENG/ARCH	EJA
FP ENGINEER	DSN

DEPARTMENT OF THE NAVY
NAVAL FACILITIES ENGINEERING SYSTEMS COMMAND
DC CORE:
MCAS BEAUFORT

NAVAL FACILITIES ENGINEERING SYSTEMS COMMAND ~ MID-ATLANTIC
NORFOLK, VA

BEAUFORT, SC

P-475 AIRCRAFT MAINTENANCE HANGAR - VOLUME 1 (BASE BID WITH OPTIONS)

SITE DETAILS

SCALE: As indicated
EPROJECT NO.: 1363603
CONSTR. CONTR. NO.
NAVFAC DRAWING NO. 12859379
SHEET 207 OF 1412

ES505

DRAWFORM REVISION: 25 AUGUST 2020

Autodesk Docs://2042 VAF A1 320 F33 Maintenance Hangar/2042 F33 maint Hangar_Site Bld Option EL R17.0224.rvt
11/12/2025 11:49:45 AM

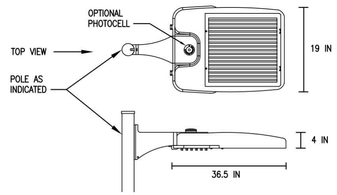

LUMINAIRE REQUIREMENTS:

1. HOUSING - DIE-CAST AND EXTRUDED ALUMINUM WITH INTEGRAL, SELF-CLEANING HEAT SINK FINS, RIBS, OR EQUIVALENT PASSIVE COOLING MECHANISM. HEATSINK SHALL BE INCORPORATED DIRECTLY INTO HOUSING TO ENSURE MAXIMUM HEAT TRANSFER AND DISSIPATION.
2. FINISH - MULTI-STAGE PRE-TREATMENT, FINISHED WITH BAKED-ON POLYESTER POWDER COAT. FINISH SHALL PASS 2500 HOUR SALT SPRAY TEST PER ASTM B117. FINISH SHALL BE DARK BRONZE.
3. POWER SUPPLY/LED DRIVER - PROVIDE IN SEPARATE COMPARTMENT ACCESSIBLE WITHOUT THE USE OF HAND TOOLS. CLASS 1 DRIVER SHALL OPERATE AT 120/277V, 50/60 HZ. POWER FACTOR GREATER THAN 0.9 AND THD LESS THAN 20% AT FULL LOAD. MINIMUM EFFICACY SHALL BE 60 LM/W.
4. LED OPTICAL ASSEMBLY - NUMBER OF LED ARRAYS SHALL VARY TO ACCOMMODATE DESIRED LUMINAIRE OUTPUT. PROVIDE WITH EQUIVALENT NEMA DISTRIBUTION AS LISTED ON LIGHTING FIXTURE SCHEDULE. BUG UPLIGHT RATING OF U0, WITH BACKLIGHT AND GLARE RATINGS AS DETERMINED BY LIGHTING ZONE INSTALLED.
5. SURGE PROTECTION — 6 kV MINIMUM, COMPLIANT WITH ANSI C62.41.2.
6. SEE C1/EL502 FOR POLE DETAIL.
7. CERTIFICATION - UL AND/OR ETL LISTED, MINIMUM IP65 RATED PER ANSI/IEC 60529, AND RoHS COMPLIANT.
8. OTHER - THE ABOVE SKETCH IS A NON-PROPRIETARY GRAPHIC REPRESENTATION OF A LUMINAIRE THAT MAY MEET THE SPECIFICATION REQUIREMENTS AND IS NOT INTENDED TO INDICATE A CERTAIN MANUFACTURER'S PREFERENCE. ALL DIMENSIONS ARE NOMINAL AND VARY PER MANUFACTURER.

LED AREA LUMINAIRE

REVISED: MARCH 2013 | LIGHTING PLATE: XL-03

C1 FIXTURE TYPE SL3, SL4, SL5

NOT TO SCALE

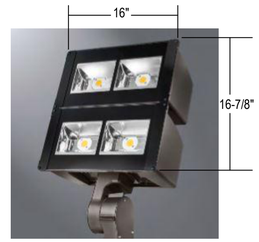

LUMINAIRE REQUIREMENTS:

1. HOUSING - HEAVY DUTY DIE-CAST ALUMINUM WITH INTEGRAL, HEAT SINK FINS, RIBS, OR EQUIVALENT PASSIVE COOLING MECHANISM. HEATSINK SHALL BE INCORPORATED DIRECTLY INTO HOUSING TO ENSURE MAXIMUM HEAT TRANSFER AND DISSIPATION.
2. FINISH - MULTI-STAGE PRE-TREATMENT, FINISHED WITH BAKED-ON POLYESTER POWDER COAT. FINISH SHALL PASS 2500 HOUR SALT SPRAY TEST PER ASTM B117. FINISH SHALL BE DARK BRONZE.
3. POWER SUPPLY/LED DRIVER - CLASS 1 DRIVER SHALL OPERATE AT 120/277V, 50/60 HZ. POWER FACTOR GREATER THAN 0.9 AND THD LESS THAN 20% AT FULL LOAD. MINIMUM EFFICACY SHALL BE 100 LM/W.
4. LED OPTICAL ASSEMBLY - NUMBER OF LED ARRAYS SHALL VARY TO ACCOMMODATE DESIRED LUMINAIRE OUTPUT. PROVIDE WITH WIDE FLOOD DISTRIBUTION.
5. SURGE PROTECTION — 6 kV MINIMUM, COMPLIANT WITH ANSI C62.41.2.
6. CERTIFICATION - UL AND/OR ETL LISTED, MINIMUM IP65 RATED PER ANSI/IEC 60529, AND RoHS COMPLIANT.
7. OTHER - THE ABOVE SKETCH IS A NON-PROPRIETARY GRAPHIC REPRESENTATION OF A LUMINAIRE THAT MAY MEET THE SPECIFICATION REQUIREMENTS AND IS NOT INTENDED TO INDICATE A CERTAIN MANUFACTURER'S PREFERENCE. ALL DIMENSIONS ARE NOMINAL AND VARY PER MANUFACTURER.

LED FLOOD LUMINAIRE

C2 FIXTURE TYPE SF1

NOT TO SCALE

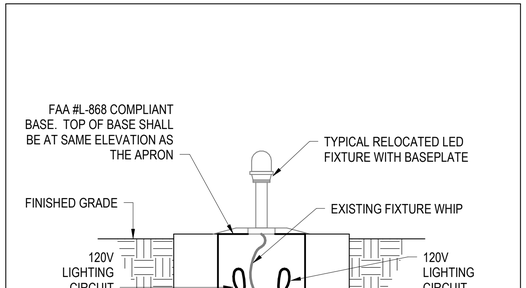

C3 APRON EDGE LIGHT MOUNTING DETAIL

NOT TO SCALE

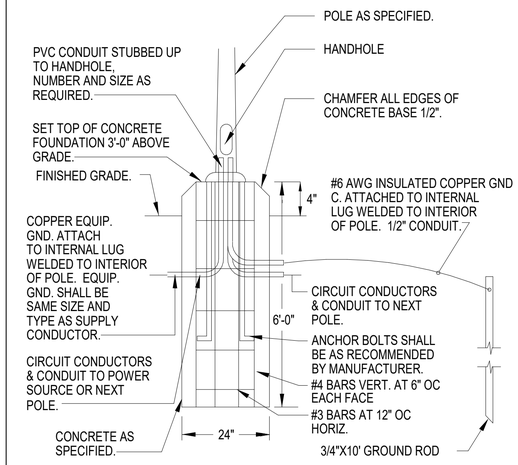

BOLT-DOWN POLE FOUNDATIONS

REVISED: MARCH 2013 | LIGHTING PLATE: XL-29

A1 POLE BASE DETAIL SL3, SL4

NOT TO SCALE

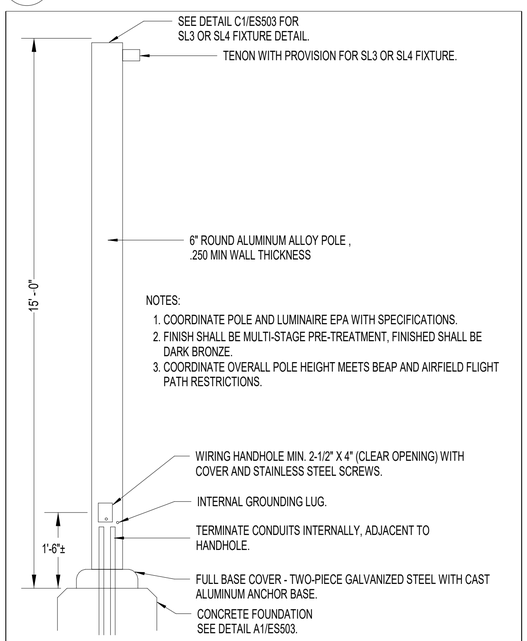

NOTES:

1. COORDINATE POLE AND LUMINAIRE EPA WITH SPECIFICATIONS.
2. FINISH SHALL BE MULTI-STAGE PRE-TREATMENT, FINISHED SHALL BE DARK BRONZE.
3. COORDINATE OVERALL POLE HEIGHT MEETS BEAP AND AIRFIELD FLIGHT PATH RESTRICTIONS.

ALUMINUM POLE - ANCHOR-BASE, TENON MOUNT

REVISED: MARCH 2013 | LIGHTING PLATE: XL-27

A2 POLE DETAIL SL3, SL4

NOT TO SCALE

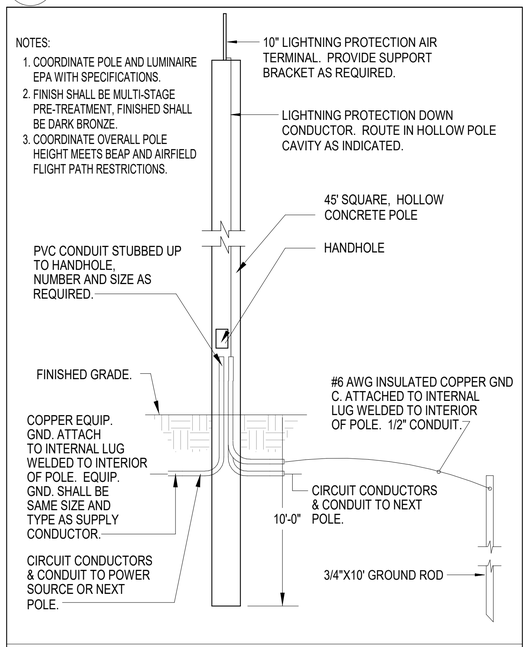

NOTES:

1. COORDINATE POLE AND LUMINAIRE EPA WITH SPECIFICATIONS.
2. FINISH SHALL BE MULTI-STAGE PRE-TREATMENT, FINISHED SHALL BE DARK BRONZE.
3. COORDINATE OVERALL POLE HEIGHT MEETS BEAP AND AIRFIELD FLIGHT PATH RESTRICTIONS.

DIRECT BURY POLE

REVISED: | LIGHTING PLATE:

A3 POLE BASE DETAIL SL5

NOT TO SCALE

NOTE:
IF THIS DRAWING IS LESS THAN 34" X 22"
IT IS A REDUCED SIZE DRAWING

STM	DESCRIPTION	DATE	APPR
1	MOD P00005	05/2023	
2	MOD P00006 AND P00007	10/2025	

NAVFAC

NICHOLAS G. ZUBRZYCKI LICENSE No 64299 STATE OF FLORIDA PROFESSIONAL ENGINEER

BAMFORTH ENGINEERS & SURVEYORS

AE INFO

APPROVED

FOR COMMANDER NAVFAC

ACTIVITY: Approved by J. Scott Roberts, Asset Management Branch Head & Supervisory Facility Planner, PWD Beaufort, SC via email.

SATISFACTORY TO DATE: 12/15/2022

DES	RLW	DRW	RLW	CHK	KLM
PM/DM	KTB / RLH				
BRANCH MANAGER	JAS				
CHIEF ENG/ARCH	EJA				
FP ENGINEER	DSN				

DEPARTMENT OF THE NAVY
NAVAL FACILITIES ENGINEERING SYSTEMS COMMAND
NAVAL FACILITIES ENGINEERING SYSTEMS COMMAND ~ MID-ATLANTIC
NORFOLK, VA
DC CORE:
MCAS BEAUFORT
BEAUFORT, SC
P-475 AIRCRAFT MAINTENANCE HANGAR - VOLUME 1 (BASE BID WITH OPTIONS)
LIGHTING FIXTURE DETAILS

SCALE: NTS
EPROJECT NO.: 1363603
CONSTR. CONTR. NO.
NAVFAC DRAWING NO. 12859380
SHEET 208 OF 1412

ES506

DRAWFORM REVISION: 25 AUGUST 2020

Autodesk Docs://20042 \ MF-A1 320 F35 Maintenance Hangar/20042 F35 maint Hangar_Site Option EL.rvt/3204.rvt
11/12/2025 11:49:53 AM

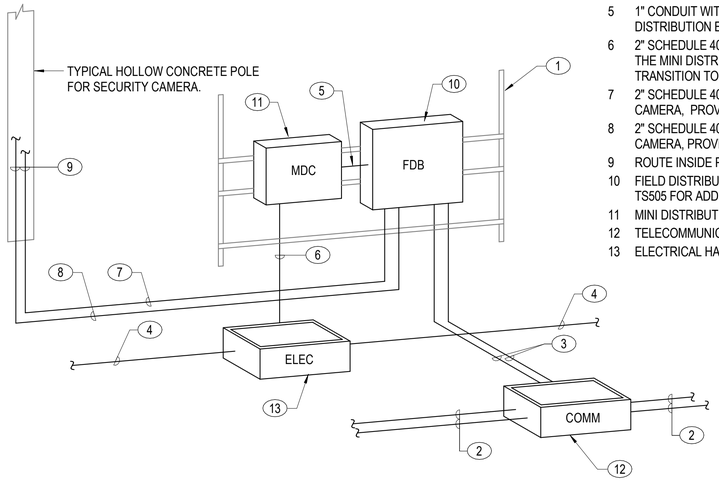

KEY NOTES: (C1/ES507) (00)

1 SUPPORT RACK AS REQUIRED. SEE C3/ES507 FOR RACK DETAIL.
2 4" SCHEDULE 40 PVC CONDUIT, PROVIDED BY DIVISION 27.
3 1" CONDUIT FOR LOW VOLTAGE CABLES, PROVIDED BY DIVISION 27.
4 2" SCHEDULE 40 PVC CONDUIT WITH (2)#4 + (1)#4 GND. TO FEED THE MINI DISTRIBUTION CENTER TRANSFORMER PRIMARY.
5 1" CONDUIT WITH (3) #12 + (1)#12 GND TO SERVE THE FIELD DISTRIBUTION BOX "FDB".
6 2" SCHEDULE 40 PVC CONDUIT WITH (2)#4 + (1)#4 GND TO FEED THE MINI DISTRIBUTION CENTER TRANSFORMER PRIMARY. TRANSITION TO RIGID STEEL WHERE ROUTED ABOVE GRADE.
7 2" SCHEDULE 40 PVC DATA CONDUIT TO SERVE POLE MOUNTED CAMERA, PROVIDED BY DIVISION 27.
8 2" SCHEDULE 40 PVC POWER CONDUIT TO SERVE POLE MOUNTED CAMERA, PROVIDED BY DIVISION 27.
9 ROUTE INSIDE POLE CAVITY.
10 FIELD DISTRIBUTION BOX PROVIDED BY DIVISION 27. SEE SHEET TS505 FOR ADDITIONAL INFORMATION.
11 MINI DISTRIBUTION CENTER.
12 TELECOMMUNICATIONS HANDHOLE, PROVIDED BY DIVISION 27.
13 ELECTRICAL HANDHOLE HH-2. SEE SHEET ES100C FOR LOCATION.

C1 RESTRICTED AREA SECURITY FENCE CONNECTION DETAIL
NOT TO SCALE

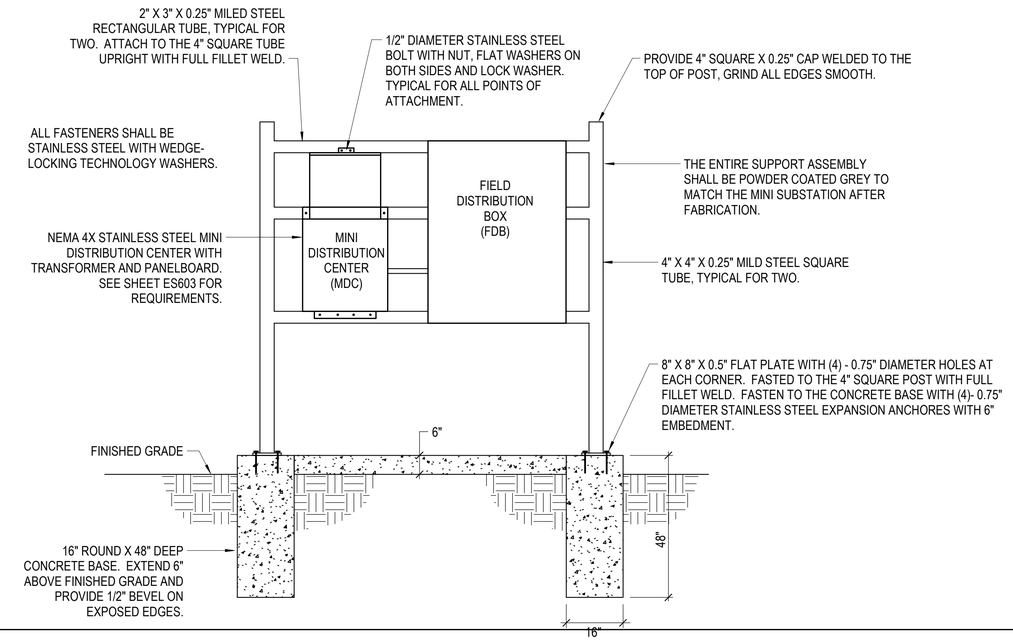

C3 RESTRICTED AREA SECURITY FENCE EQUIPMENT RACK DETAIL
NOT TO SCALE

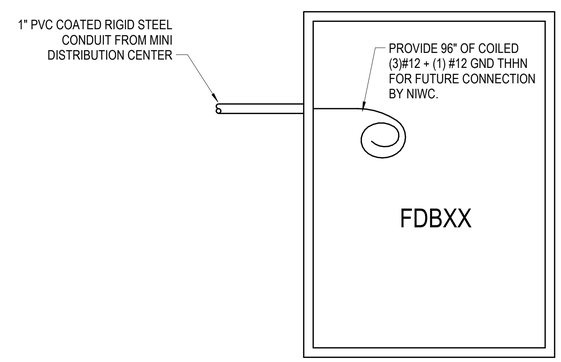

A1 FIELD DISTRIBUTION BOX CONNECTION DETAIL
NOT TO SCALE

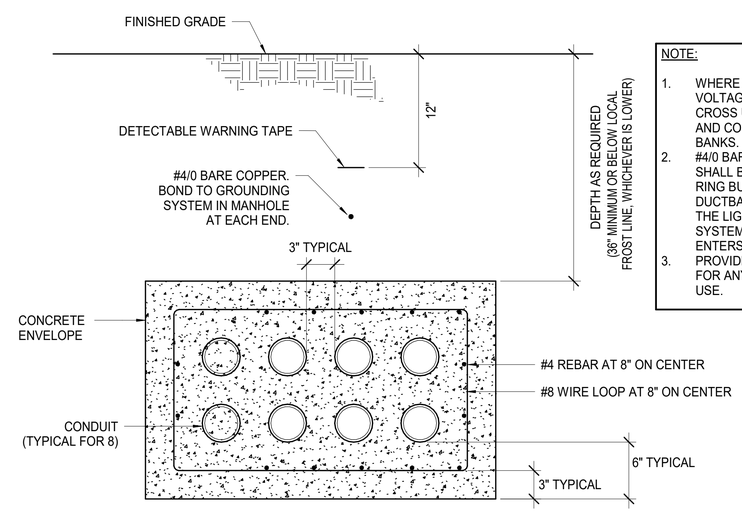

NOTE:
1. WHERE REQUIRED, MEDIUM VOLTAGE DUCT BANKS SHALL CROSS UNDER LOW VOLTAGE AND COMMUNICATIONS DUCT BANKS.
2. #4/0 BARE COPPER CONDUCTOR SHALL BOND TO THE GROUND RING BUS IN EACH MANHOLE THE DUCTBANK ENTERS. BOND TO THE LIGHTNING PROTECTION SYSTEM WHERE THE DUCTBANK ENTERS THE BUILDING.
3. PROVIDE NYLON PULL STRING FOR ANY SPARE DUCTS NOT IN USE.

A3 8-WAY CONCRETE REINFORCED POWER DUCT BANK DETAIL
NOT TO SCALE

NOTE:
IF THIS DRAWING IS LESS THAN 34" X 22"
IT IS A REDUCED SIZE DRAWING

STM	DESCRIPTION	DATE	APPR
1	MOD P00005	05/2023	
2	MOD P00006 AND P00007	10/2025	

NAVFAC

NICHOLAS G. ZUBRZYCKI LICENSED No 64299 STATE OF FLORIDA PROFESSIONAL ENGINEER

BAMFORTH ENGINEERS ARCHITECTS

AE INFO

APPROVED
FOR COMMANDER NAVFAC 11/21/2022

ACTIVITY: Approved by J. Scott Roberts, Asset Management Branch Head & Supervisory Facility Planner, PWD Beaufort, SC via email.

SATISFACTORY TO DATE 12/15/2022

DES	RLW	DRW	RLW	CHK	KLM
PMDM	KTB / RLH				
BRANCH MANAGER	JAS				
CHIEF ENG/ARCH	EJA				
FP ENGINEER	DSN				

NAVAL FACILITIES ENGINEERING SYSTEMS COMMAND
NORFOLK, VA

DEPARTMENT OF THE NAVY
NAVAL FACILITIES ENGINEERING SYSTEMS COMMAND ~ MID-ATLANTIC
DC CORE:
MCAS BEAUFORT
BEAUFORT, SC

P-475 AIRCRAFT MAINTENANCE HANGAR - VOLUME 1 (BASE BID WITH OPTIONS)

SITE DETAILS

SCALE: NTS
EPROJECT NO.: 1363603
CONSTR. CONTR. NO.
NAVFAC DRAWING NO. 12859381
SHEET 209 OF 1412

ES507

DRAWFORM REVISION: 25 AUGUST 2020

Autodesk Docs://2042 VAF A1 520 F35 Maintenance Hangar/2042 F35 maint Hangar_Site Bid Option EL.rvt/T3D24 rvt
11/12/2025 11:50:01 AM

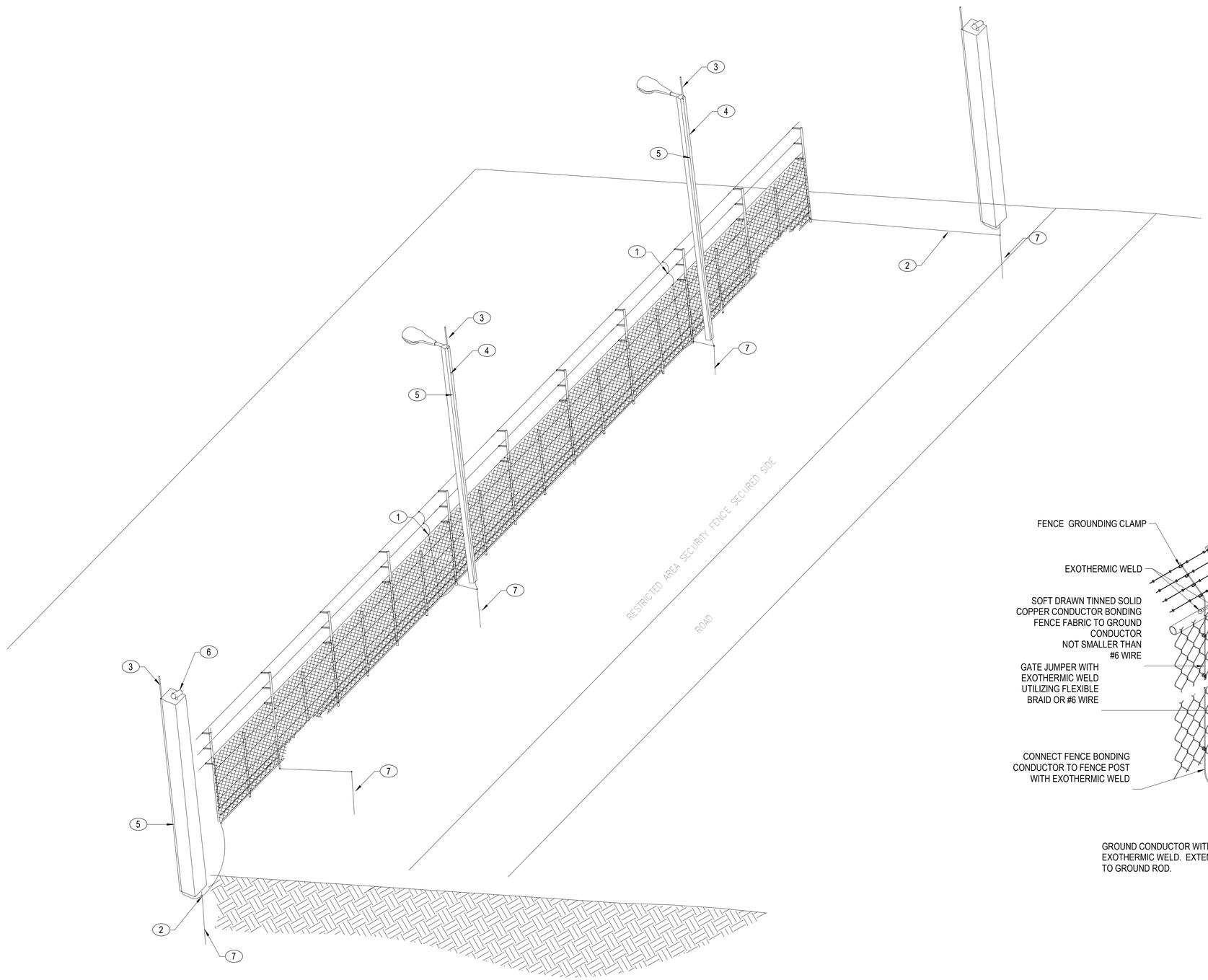

NOTES:

KEY NOTES (00)

1. FENCE BONDING CONDUCTOR, TIE TO BARBED WIRE WITH GROUNDING CLAMPS.
2. BONDING POINT FOR ALL FENCE POSTS.
3. AIR TERMINAL.
4. LIGHT POLE AND FIXTURE.
5. DOWN CONDUCTOR.
6. CCTV CAMERA.
7. GROUND ROD.

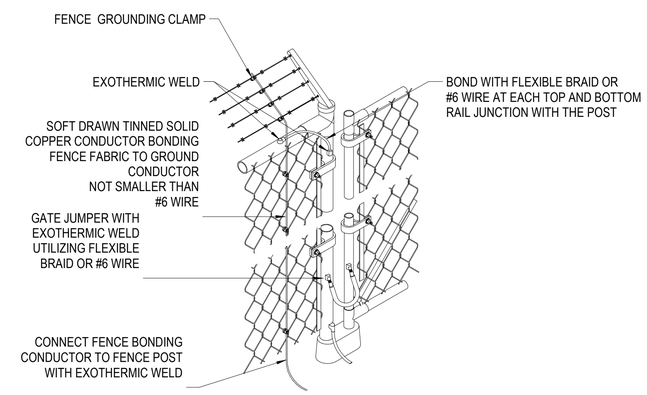

GROUND CONDUCTOR WITH EXOTHERMIC WELD. EXTEND TO GROUND ROD.

A1 RESTRICTED AREA SECURITY FENCE GROUNDING DETAIL

NOT TO SCALE

NOTE:
IF THIS DRAWING IS LESS THAN 34" X 22"
IT IS A REDUCED SIZE DRAWING

STM	DESCRIPTION	DATE	APPR
1	MOD P00005	05/2023	
2	MOD P00006 AND P00007	10/2025	

NAVFAC

NICHOLAS G. ZUBRZYCKI LICENSE No 64299 STATE OF FLORIDA PROFESSIONAL ENGINEER

BAMFORTH ENGINEERS & CONTRACTORS

AE INFO

APPROVED

FOR COMMANDER NAVFAC 11/21/2025

ACTIVITY: Approved by J. Scott Roberts, Asset Management Branch Head & Supervisory Facility Planner, PWD Beaufort, SC via email.

SATISFACTORY TO DATE 12/15/2022

DES	RLW	DRW	RLW	CHK	KLM
PM/DM	KTB / RLH				
BRANCH MANAGER	JAS				
CHIEF ENG/ARCH	EJA				
FP ENGINEER	DSN				

DEPARTMENT OF THE NAVY
NAVAL FACILITIES ENGINEERING SYSTEMS COMMAND
DC CORE
NAVAL FACILITIES ENGINEERING SYSTEMS COMMAND – MID-ATLANTIC NORFOLK, VA
MCAS BEAUFORT BEAUFORT, SC
P-475 AIRCRAFT MAINTENANCE HANGAR - VOLUME 1 (BASE BID WITH OPTIONS)
SITE DETAILS

SCALE: 1/2" = 1'-0"

EPROJECT NO.: 1363603

CONSTR. CONTR. NO.

NAVFAC DRAWING NO. 12859382

SHEET 210 OF 1412

ES508

DRAWFORM REVISION: 25 AUGUST 2020

Autodesk Docs://0042 VMFAT 100 F35 Maintenance Hangar/0042 F35 maint hangar_Site Bid Option BL.RVT2024.rvt
11/12/2025 11:50:09 AM

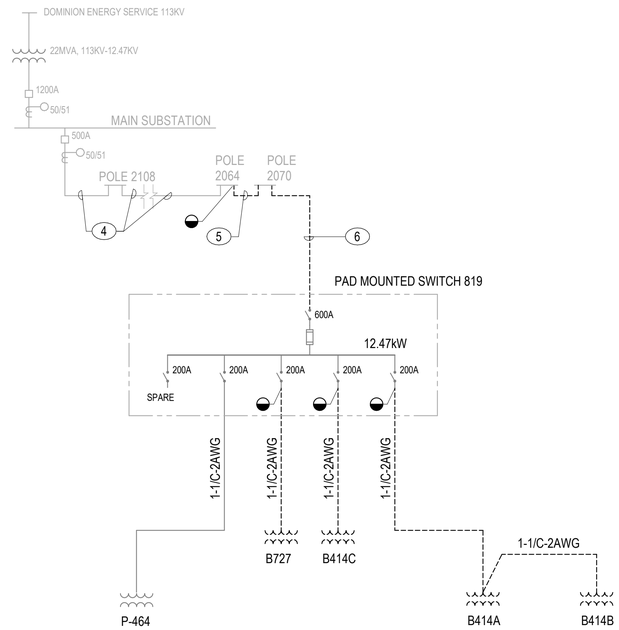

MEDIUM VOLTAGE DEMOLITION PLAN

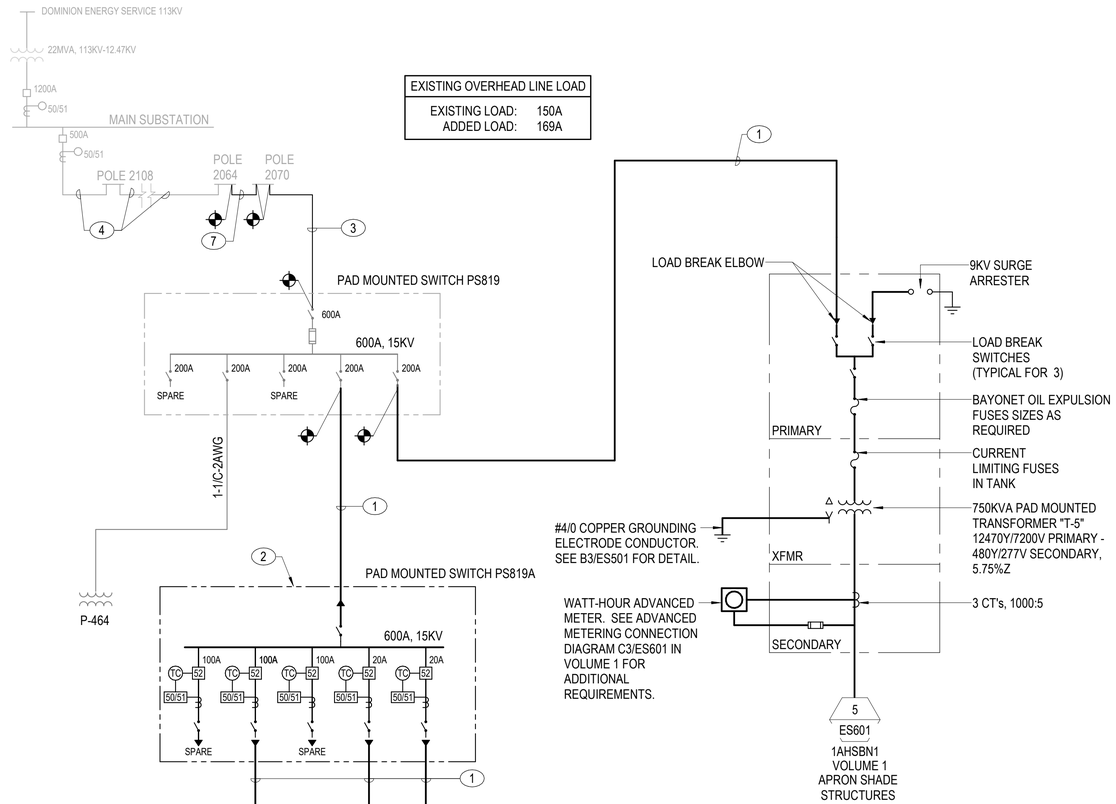

EXISTING OVERHEAD LINE LOAD	
EXISTING LOAD:	150A
ADDED LOAD:	169A

NOTES:

KEY NOTES (00)

1. SEE SHEETS ES100, ES100A AND ES100B FOR DUCT BANK AND FEEDER INFORMATION.
2. 600A, 15KV, SF6 GAS INSULATED, PAD MOUNT SWITCH. LOAD SIDE SWITCHES SHALL BE EQUIPPED WITH VACUUM CIRCUIT INTERRUPTERS WITH ELECTRONIC OVERCURRENT RELAYS.
3. REPLACEMENT POLE RISER, 5" SCHEDULE 80PVC CONDUIT WITH (3)1/C, 15KV, MV-105, #4/0 + (1)#2 600V GROUND (ALUMINUM). BURY AT 36" BELOW FINISHED GRADE WITH WARNING TAPE AT 12" ABOVE THE CONDUIT.
4. EXISTING #2/0 QUAIL ACSR OVERHEAD LINE.
5. REMOVE #2 QUAIL ACSR OVERHEAD LINE AND REPLACE AS INDICATED ON A1/ES600.
6. REMOVE 5"C - (3)#4 POLE RISER AND REPLACE AS INDICATED ON A1/ES600.
7. #2/0 QUAIL ACSR OVERHEAD LINE.

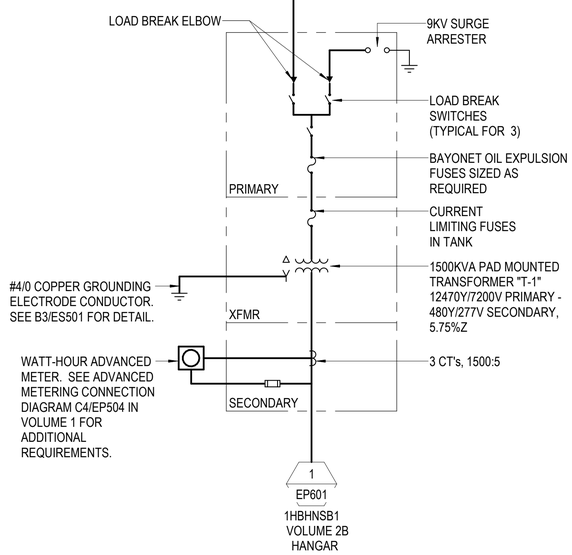

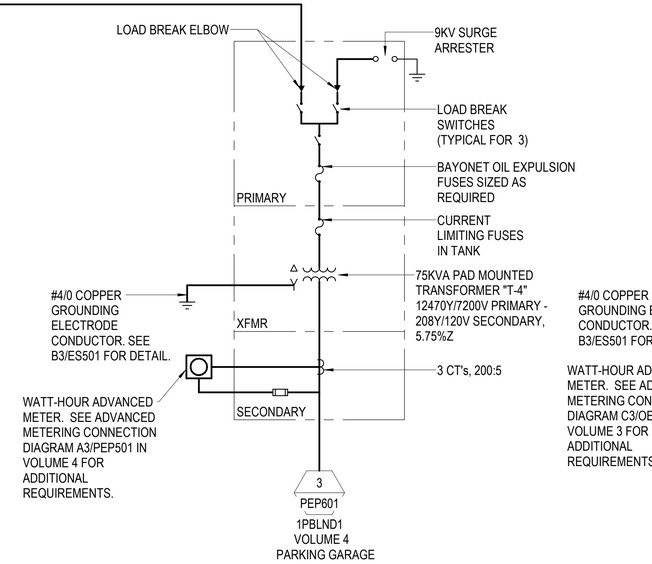

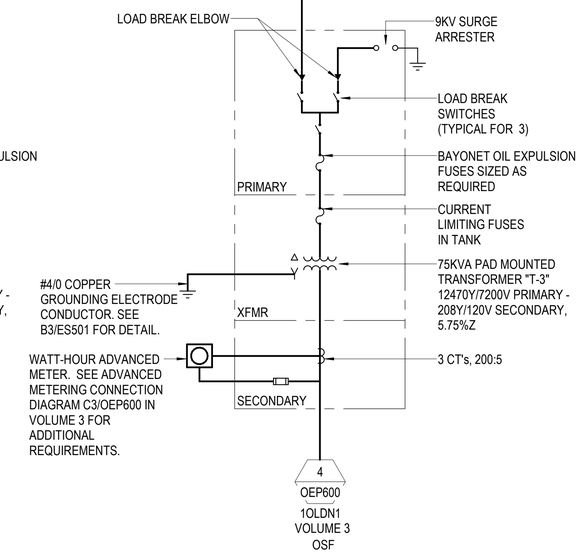

A1 MEDIUM VOLTAGE SINGLE LINE DIAGRAM

12" = 1'-0"

NOTE:
IF THIS DRAWING IS LESS THAN 34" X 22"
IT IS A REDUCED SIZE DRAWING

STM	DESCRIPTION	DATE	APPR
1	MOD P00005	05/2023	
2	MOD P00006 AND P00007	10/2025	

NAVFAC

NICHOLAS G. ZUBRZYCKI LICENSE No 64299 STATE OF FLORIDA PROFESSIONAL ENGINEER

BAMFORTH ENGINEERS - ARCHITECTS

AE INFO

APPROVED

FOR COMMANDER NAVFAC 11/21/2025

ACTIVITY: Approved by J. Scott Roberts, Asset Management Branch Head & Supervisory Facility Planner, PWD Beaufort, SC via email.

SATISFACTORY TO DATE	12/15/2022
DES RLW / DRW RLW / CHK KLM	
PM/DM	KTB / RLH
BRANCH MANAGER	JAS
CHIEF ENG/ARCH	EJA
FP ENGINEER	DSN

DEPARTMENT OF THE NAVY
NAVAL FACILITIES ENGINEERING SYSTEMS COMMAND
DC CORE
NAVAL FACILITIES ENGINEERING SYSTEMS COMMAND – MID-ATLANTIC NORFOLK, VA
MCAS BEAUFORT
BEAUFORT, SC

P-475 AIRCRAFT MAINTENANCE HANGAR - VOLUME 1 (BASE BID WITH OPTIONS)

SINGLE LINE DIAGRAM - MEDIUM VOLTAGE

SCALE:	12" = 1'-0"
EPROJECT NO.:	1363603
CONSTR. CONTR. NO.	
NAVFAC DRAWING NO.	12859383
SHEET	211 OF 1412

ES600

DRAWFORM REVISION: 25 AUGUST 2020

Autodesk Docs://20042 MFA1 502 F35 Maintenance Hangar/20042 F35 maint Hangar_Site Bid Option EL-R17/20241.rvt
11/12/2025 11:50:17 AM

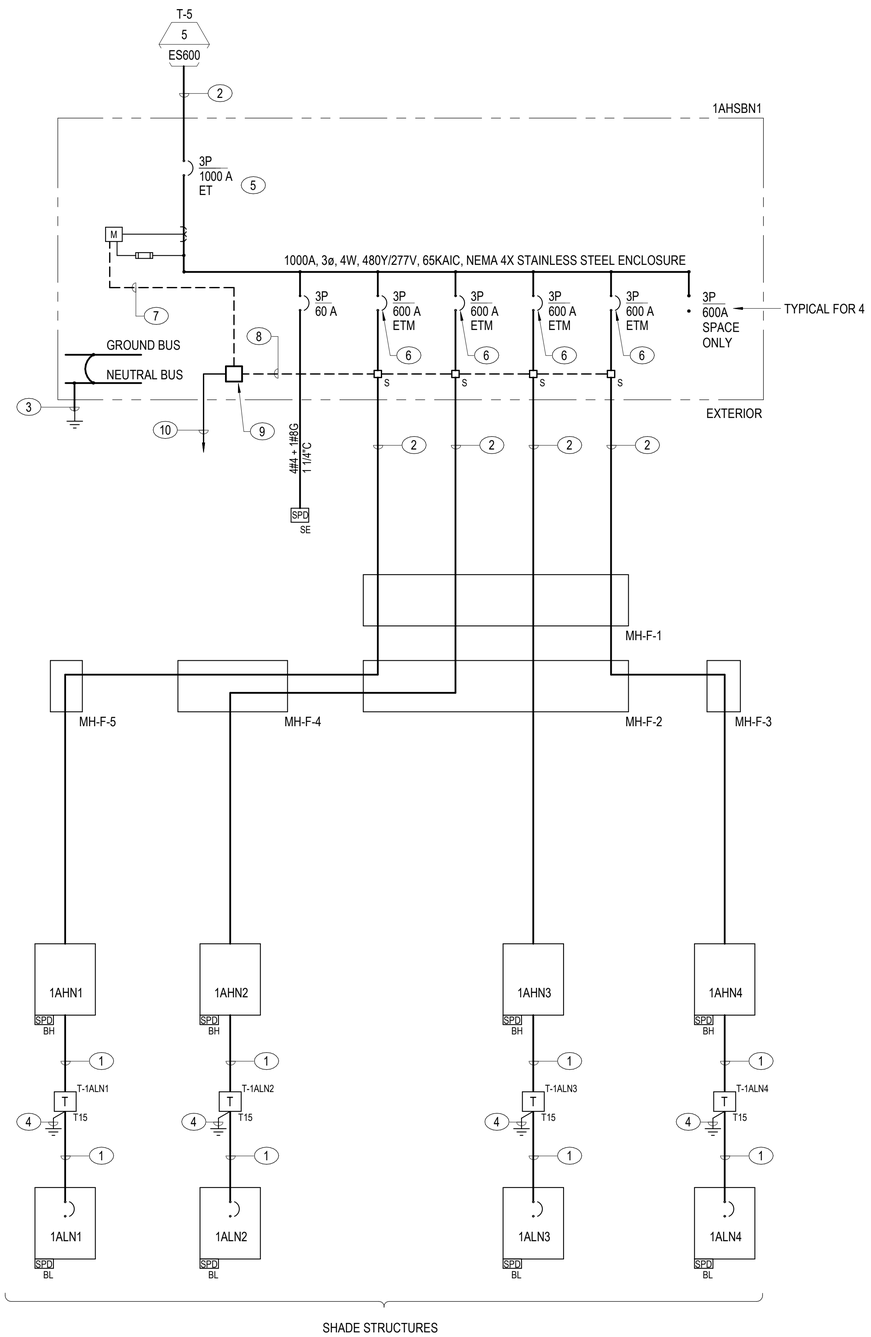

A1 APRON POWER SINGLE LINE DIAGRAM

12" = 1'-0"

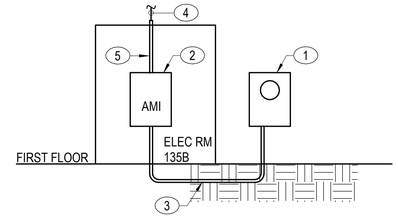

KEY NOTES: (A1/EP504)

1. ADVANCED ELECTRIC METER MOUNTED TO SIDE OF SERVICE TRANSFORMER.
2. ADVANCED METERING INFRASTRUCTURE EQUIPMENT CABINET. SEE A1/EP401 IN VOLUME 2B FOR LOCATION AND MOUNTING HEIGHT.
3. 1" CONDUIT WITH NETWORKING WIRING AS REQUIRED. COORDINATE WITH PUBLIC WORKS AMI SYSTEM REPRESENTATIVE FOR WIRING REQUIREMENTS.
4. 6-STRAND SINGLE MODE FIBER OPTIC CABLE TO FIBER OPTIC PATCH PANEL IN COMMUNICATIONS ROOM 111. REFER TO VOLUME 2B FOR LOCATION.
5. 1/2" CONDUIT. STUB CONDUIT TO NEAREST CABLE TRAY; SEE A3/ES603 IN VOLUME 2B FOR DETAIL.

C3 METERING CONNECTION DIAGRAM - APRON

NOT TO SCALE

NOTES:

KEY NOTES (00)

1. SEE DRY TYPE TRANSFORMER SCHEDULE ON THIS SHEET FOR CONDUIT AND WIRE SIZE.
2. SEE SHEET ES100 AND ES100A FOR DUCT BANK AND FEEDER CONFIGURATION.
3. SEE SHEET ES602 FOR GROUNDING REQUIREMENTS.
4. REFER TO DRY TYPE TRANSFORMER SCHEDULE ON THIS SHEET FOR GROUNDING ELECTRODE CONDUCTOR.
5. PROVIDE MAIN CIRCUIT BREAKER WITH GROUND FAULT PROTECTION AND ARC ENERGY-REDUCING MAINTENANCE SWITCHING WITH LOCAL STATUS INDICATOR IN ACCORDANCE WITH NEC ARTICLE 240.67.
6. PROVIDE CIRCUIT BREAKER TERMINALS AS REQUIRED TO ACCOMMODATE THE CONDUCTORS AS INDICATED.
7. ASHRAE 90.1 ELECTRICAL ENERGY MODBUS COMMUNICATIONS WIRING FOR TRANSMISSION OF ELECTRICAL DATA FROM THE MULTI-FUNCTION DIGITAL METER TO THE POWER MONITORING SYSTEM SERVER.
8. ASHRAE 90.1 ELECTRICAL ENERGY MONITORING MODBUS COMMUNICATIONS WIRING FOR TRANSMISSION OF ELECTRICAL METERING DATA FROM THE INDIVIDUAL CIRCUIT BREAKERS TO THE POWER MONITORING SYSTEM SERVER.
9. ETHERNET GATEWAY LOCATED WITHIN ELECTRICAL PANELBOARD OR SWITCHGEAR. THE GATEWAY SHALL BE UL LISTED FOR USE WITHIN THE ELECTRICAL PANELBOARD OR SWITCHGEAR AND SUPPLIED WITH THE PANELBOARD OR SWITCHGEAR.
10. NETWORK CONNECTION TO THE POWER MONITORING SYSTEM SERVER. SEE SHEET A3/ES601 FOR CONNECTION DIAGRAM.

SURGE PROTECTIVE DEVICE SCHEDULE

DESIGNATION	REPETITIVE SURGE CAPACITY	VOLTAGE RATING AND CONFIGURATION	PROTECTION MODULES	CATEGORY TYPE	SHORT CIRCUIT RATING
BH	100,000A	480Y/277V, 3Φ, 5W	L-L, L-N, L-G, N-G	BRANCH	100,000A
BL	100,000A	208Y/120V, 3Φ, 5W	L-L, L-N, L-G, N-G	BRANCH	100,000A
DH	200,000A	480Y/277V, 3Φ, 5W	L-L, L-N, L-G, N-G	DISTRIBUTION	100,000A
DL	200,000A	208Y/120V, 3Φ, 5W	L-L, L-N, L-G, N-G	DISTRIBUTION	100,000A
SE	200,000A	480Y/277V, 3Φ, 5W	L-L, L-N, L-G, N-G	SERVICE ENTRANCE	100,000A

SURGE PROTECTIVE DEVICE SCHEDULE NOTES:

A. NIPPLE MOUNT BRANCH SURGE PROTECTIVE DEVICES TO BOTTOM OF PANELBOARD. DEVICE SHALL BE PROVIDED WITH #10 AWG FACTORY LEADS.
B. MOUNT SERVICE ENTRANCE SURGE PROTECTIVE DEVICES TO SIDE OF SWITCHBOARD OR SWITCHGEAR.

3Φ DRY TYPE STEP DOWN TRANSFORMER SCHEDULE

DESIGNATION	KVA	PRIMARY VOLTAGE	PRIMARY FEEDER	SECONDARY VOLTAGE	SECONDARY FEEDER	GROUNDING ELECTRODE CONDUCTOR SIZE
T15	15	480V	3/4"C - 3#10 + 1#10 GND	208Y/120V	1"C - 4#6 + 1#8 GND	1/2"C - #8
T30	30	480V	1"C - 3#6 + 1#10 GND	208Y/120V	2"C - 4#1 + 1#6 GND	1/2"C - #6
T45	45	480V	1"C - 3#3 + 1#8 GND	208Y/120V	2"C - 4#1/0 + 1#6 GND	1/2"C - #6
T75	75	480V	1 1/2"C - 3#1/0 + 1#6 GND	208Y/120V	3"C - 4#250 + 1#2 GND	3/4"C - #2
T112.5	112.5	480V	2"C - 3#4/0 + 1#4 GND	208Y/120V	TWO 2 1/2"C WITH 4#3/0 + 1#1/0 GND IN EA.	1"C - #1/0
T150	150	480V	2 1/2"C - 3#350 + 1#3 GND	208Y/120V	TWO 3"C WITH 4#250 + 1#1/0 GND IN EA.	1"C - #1/0
T225	225	480V	TWO 2"C WITH 3#250 + 1#3 GND IN EA.	208Y/120V	THREE 3" WITH 4#300 KCMIL + 1#2/0 GND IN EA.	1"C - #2/0

NOTE:
IF THIS DRAWING IS LESS THAN 34" X 22"
IT IS A REDUCED SIZE DRAWING

STM	DESCRIPTION	DATE	APPR
1	MOD P00005	05/2023	
2	MOD P00006 AND P00007	10/2025	

NAVFAC

NICHOLAS G. ZUBRZYCKI LICENSE No 64299 STATE OF FLORIDA PROFESSIONAL ENGINEER

BAMFORTH ENGINEERS & CONTRACTORS

AE INFO

APPROVED
FOR COMMANDER NAVFAC 11/21/2025

ACTIVITY: Approved by J. Scott Roberts, Asset Management Branch Head & Supervisory Facility Planner, PWD Beaufort, SC via email.

SATISFACTORY TO DATE 12/15/2022

DES RLW | DRW RLW | CHK KLM
PM/DM KTB / RLH
BRANCH MANAGER JAS
CHIEF ENG/ARCH EJA
FP ENGINEER DSN

DEPARTMENT OF THE NAVY
NAVAL FACILITIES ENGINEERING SYSTEMS COMMAND
DC CORE
MCAS BEAUFORT
NAVAL FACILITIES ENGINEERING SYSTEMS COMMAND – MID-ATLANTIC NORFOLK, VA
BEAUFORT, SC
P-475 AIRCRAFT MAINTENANCE HANGAR - VOLUME 1 (BASE BID WITH OPTIONS)
SINGLE LINE DIAGRAM - NORMAL POWER - APRON

SCALE: As indicated
EPROJECT NO.: 1363603
CONSTR. CONTR. NO.
NAVFAC DRAWING NO. 12859384
SHEET 212 OF 1412

ES601

DRAWFORM REVISION: 25 AUGUST 2020

Autodesk Docs://20042 NAFAT 502 F35 Maintenance Hangar/20042 F35 maint Hangar_Site Bid Option EL-R17202414.rvt
11/12/2025 11:50:24 AM

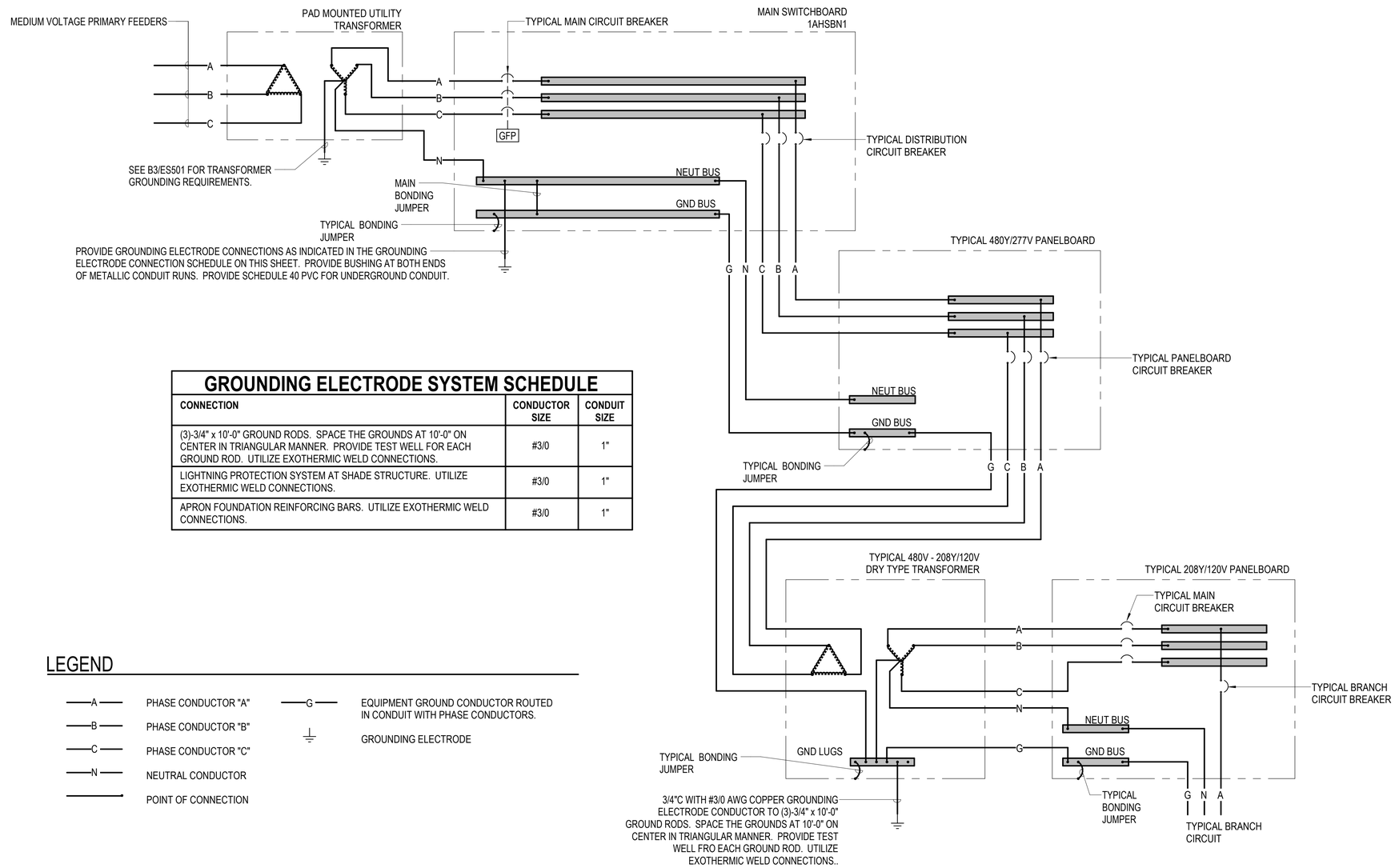

GROUNDING ELECTRODE SYSTEM SCHEDULE

CONNECTION	CONDUCTOR SIZE	CONDUIT SIZE
(3)-3/4" x 10'-0" GROUND RODS. SPACE THE GROUNDS AT 10'-0" ON CENTER IN TRIANGULAR MANNER. PROVIDE TEST WELL FOR EACH GROUND ROD. UTILIZE EXOTHERMIC WELD CONNECTIONS.	#3/0	1"
LIGHTNING PROTECTION SYSTEM AT SHADE STRUCTURE. UTILIZE EXOTHERMIC WELD CONNECTIONS.	#3/0	1"
APRON FOUNDATION REINFORCING BARS. UTILIZE EXOTHERMIC WELD CONNECTIONS.	#3/0	1"

LEGEND

—A—	PHASE CONDUCTOR "A"	—G—	EQUIPMENT GROUND CONDUCTOR ROUTED IN CONDUIT WITH PHASE CONDUCTORS.
—B—	PHASE CONDUCTOR "B"	⏚	GROUNDING ELECTRODE
—C—	PHASE CONDUCTOR "C"		
—N—	NEUTRAL CONDUCTOR		
—•—	POINT OF CONNECTION		

A1 OVERALL GROUNDING DIAGRAM - 1AHSBN1
NTS

NOTE:
IF THIS DRAWING IS LESS THAN 34" X 22"
IT IS A REDUCED SIZE DRAWING

STM	DESCRIPTION	DATE	APPR
1	MOD P00005	05/2023	
2	MOD P00006 AND P00007	10/2025	

NAVFAC

NICHOLAS G. ZUBRZYCKI LICENSE No 64299 STATE OF FLORIDA PROFESSIONAL ENGINEER

BAMFORTH ENGINEERS CONTRACTORS

AE INFO

APPROVED
FOR COMMANDER NAVFAC 11/21/2025

ACTIVITY: Approved by J. Scott Roberts, Asset Management Branch Head & Supervisory Facility Planner, PWD Beaufort, SC via email.

SATISFACTORY TO DATE 12/15/2022

DES RLW DRW RLW CHK KLM
PMDM KTB / RLH
BRANCH MANAGER JAS
CHIEF ENG/ARCH EJA
FP ENGINEER DSN

DEPARTMENT OF THE NAVY
NAVAL FACILITIES ENGINEERING SYSTEMS COMMAND
DC CORE
MCAS BEAUFORT
NAVAL FACILITIES ENGINEERING SYSTEMS COMMAND ~ MID-ATLANTIC
NORFOLK, VA
BEAUFORT, SC
P-475 AIRCRAFT MAINTENANCE HANGAR - VOLUME 1 (BASE BID WITH OPTIONS)
OVERALL GROUNDING DIAGRAM - 1AHSBN1

SCALE: NTS
EPROJECT NO.: 1363603
CONSTR. CONTR. NO.
NAVFAC DRAWING NO. 12859385
SHEET 213 OF 1412
ES602

DRAWFORM REVISION: 25 AUGUST 2020

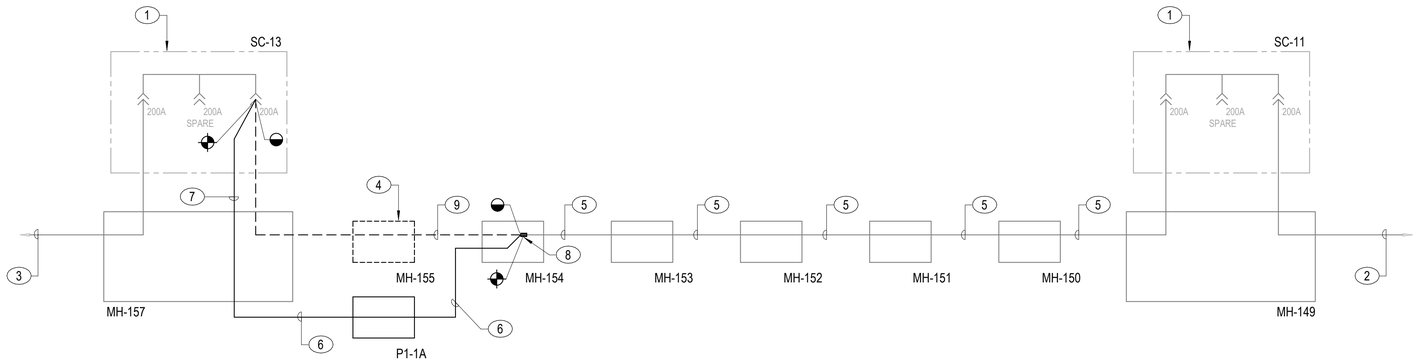

C1 MEDIUM VOLTAGE SINGLE LINE DIAGRAM - SWITCHING CABINET SC-13 RE-FEED

NOT TO SCALE

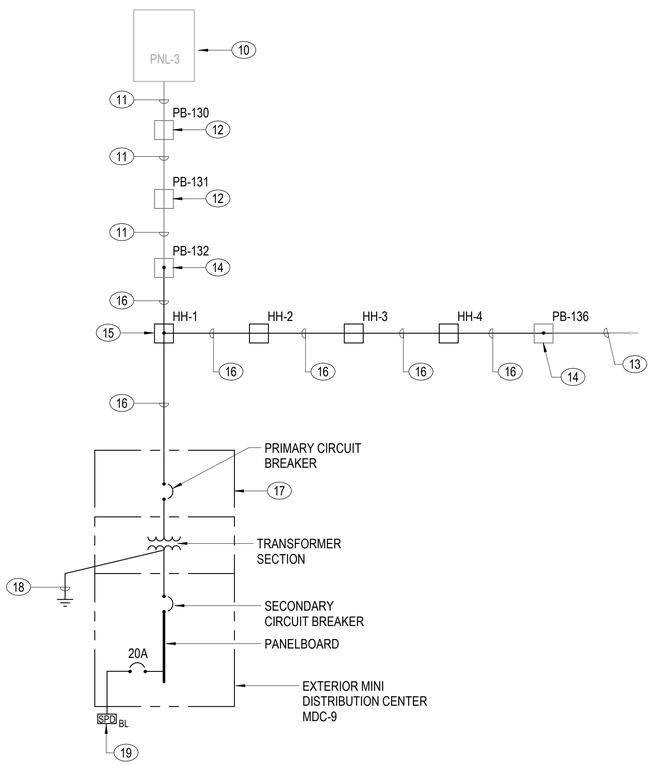

A1 MINI DISTRIBUTION CABINET SINGLE LINE DIAGRAM

NOT TO SCALE

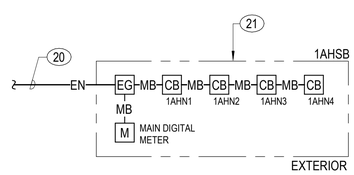

A3 SUB-METERING MANAGEMENT SYSTEM

12" = 1'-0"

POWER METERING LEGEND

EG	ETHERNET GATEWAY PROVIDED WITH SWITCHBOARD OR PANELBOARD.
M	MULTI-FUNCTION DIGITAL METER PROVIDED WITH THE SWITCHBOARD.
CB	ELECTRONIC TRIP CIRCUIT BREAKER WITH INTEGRAL POWER METERING. SUBSCRIPT INDICATES LOAD SERVED.
–EN–	CATEGORY 6 RATED ETHERNET CABLE IN 3/4" CONDUIT.
–MB–	MODBUS SERIAL CABLE.

NOTES:

KEY NOTES (00)

1 EXISTING 3 WAY- 300ACU BUS PAD MOUNTED SWITCHING CABINET TO REMAIN.
2 TO SWITCHING CABINET SC-14.
3 TO SWITCHING CABINET 9.
4 REMOVE EXISTING MANHOLE.
5 EXISTING (3)1/C, 15KV, MV-105, 133% EPR, #1 CABLE + (1)1/C #2 600V GROUND (COPPER) TO REMAIN. SEE SHEETS ED103, ED104 AND ES100C FOR ADDITIONAL INFORMATION.
6 PROVIDE (3)1/C, 15KV, MV-105, 133% EPR, #1 CABLE + (1)1/C #2 600V GROUND (COPPER) IN NEW DUCTBANK. SEE SHEET ES100C FOR ADDITIONAL INFORMATION.
7 PROVIDE (3)1/C, 15KV, MV-105, 133% EPR, #1 CABLE + (1)1/C #2 600V GROUND (COPPER) IN EXISTING DUCTBANK. SEE SHEET ES100C FOR ADDITIONAL INFORMATION.
8 SPLICE EXISTING 15KV FEEDER TO EXISTING 15KV FEEDER IN MANHOLE.
9 REMOVE 15KV FEEDER BETWEEN SC-13 AND MH-154. MAINTAIN SUFFICIENT SLACK IN MH-154 TO SPLICE TO NEW 15KV FEEDER.
10 EXISTING 480V/240V, SINGLE PHASE, 70A, PANLE PNL-3 SERVING THE MINI DISTRIBUTION PANELS AND LIGHTING CIRCUITS ALONG THE RESTRICTED AREA SECURITY FENCE. COORDINATE EXACT LOCATION WITH THE GOVERNMENT. REMOVE AND REPLACE THE EXISTING 20A, 2P CIRCUIT BREAKER SERVING MINI DISTRIBUTION CENTER MDC-9 WITH A 480, 30A, 2P, 18KAIC CIRCUIT BREAKER.
11 EXISTING 2" CONDUIT WITH (2)#4 + (1)#4 GND.
12 EXISTING IN-GRADE PULL BOX.
13 EXISTING 2" CONDUIT WITH (2)#4 + (1)#4 GND. TO ADDITIONAL EXISTING MINI DISTRIBUTION CENTERS.
14 EXISTING IN-GRADE PULL BOX. SPLICE NEW CONDUCTORS TO EXISTING CONDUCTORS IN THIS PULL BOX AS REQUIRED.
15 TAP CONDUCTORS IN THIS HANDHOLE TO FEED THE NEW MINI DISTRIBUTION CENTER.
16 2" CONDUIT WITH (2)#4 + (1)#4 GND.
17 EXTERIOR MINI DISTRIBUTION CENTER RATED FOR 5KVA, 480V SINGLE PHASE PRIMARY, 240/120V SINGLE PHASE SECONDARY. MINI DISTRIBUTION CENTER SERVES THE FIELD DISTRIBUTION BOX THAT POWERS THE SECURITY CAMERAS AND TURNSTILES IN THE RESTRICTED AREA SECURITY FENCE AND INCLUDES THE FOLLOWING: 10KVA DRY TYPE TRANSFORMERWITH 115 DEGREE C TEMPERATURE RISE, COPPER WINDINGS. 30A, 2P, 480V, 18KAIC PRIMARY MAIN CIRCUIT BREAKER. 50A, 2P, 240V, 10KAIC SECONDARY MAIN CIRCUIT BREAKER. 100A, 240/120V, 10KAIC SECONDARY PANELBOARD WITH BRANCH CIRCUITS AS FOLLOWS: (1)-20QA/2P, (5)-20A/1P, (3)-20A/1P SPACES. ALL SECONDARY BRANCH BREAKERS WILL BE RATED FOR 10KAIC. THE ASSEMBLY WILL HAVE A NEMA TYPE 4X STAINLESS STEEL ENCLOSURE. PANELBOARD WILL HAVE A PAD LOCK PROVISION SUCH THAT THE DOOR CAN BE SECURED.
18 #6 AWG COPPER GROUNDING ELECTRODE CONDUCTOR TO A ¾" X 10' LONG COPPER CLAD STEEL GROUND ROD.
19 SURGE PROTECTIVE DEVICE WILL BE UL LISTED FOR USE IN WET LOCATIONS.
20 TO EPMS SERVER LOCATED IN THE HANGAR TELECOMMUNICATIONS ROOM 145. REFER TO SHEET EP607 IN VOLUME 2B FOR CONTINUATION.
21 TYPICAL PANELBOARD OR SWITCHBOARD CONTAINING ELECTRONIC TRIP CIRCUIT BREAKER WITH INTEGRAL POWER METERING.

NOTE:
IF THIS DRAWING IS LESS THAN 34" X 22"
IT IS A REDUCED SIZE DRAWING

STM	DESCRIPTION	DATE	APPR
1	MOD P00005	05/2023	
2	MOD P00006 AND P00007	10/2025	

NAVFAC

NICHOLAS G. ZUBRZYCKI LICENSE No 64299 STATE OF FLORIDA PROFESSIONAL ENGINEER

BAMFORTH ENGINEERS & CONTRACTORS

AE INFO

APPROVED
FOR COMMANDER NAVFAC 11/21/2022
ACTIVITY Approved by J. Scott Roberts, Asset Management Branch Head & Supervisory Facility Planner, PWD Beaufort, SC via email.
SATISFACTORY TO DATE 12/15/2022

DES RLW	DRW RLW	CHK KLM	
PM/DM	KTB / RLH		
BRANCH MANAGER	JAS		
CHIEF ENG/ARCH	EJA		
FP ENGINEER	DSN		

DEPARTMENT OF THE NAVY
NAVAL FACILITIES ENGINEERING SYSTEMS COMMAND
DC CORE
NAVAL FACILITIES ENGINEERING SYSTEMS COMMAND ~ MID-ATLANTIC
NORFOLK, VA
MCAS BEAUFORT
BEAUFORT, SC
P-475 AIRCRAFT MAINTENANCE HANGAR - VOLUME 1 (BASE BID WITH OPTIONS)
SINGLE LINE DIAGRAM

SCALE: 12" = 1'-0"
EPROJECT NO.: 1363603
CONSTR. CONTR. NO.
NAVFAC DRAWING NO. 12859386
SHEET 214 OF 1412

ES603

DRAWFORM REVISION: 25 AUGUST 2020

Autodesk Docs://20045 NAFA T 502 F35 Maintenance Hangar/20045 F35 maint Hangar_Site Bid Option EL-R/T2024.rvt
11/12/2025 11:50:37 AM

LIGHTING FIXTURES SCHEDULE

FIXTURE TYPE	FIXTURE DESCRIPTION	VOLTAGE	LAMP	LUMEN	CCT	CRI	LOAD	MOUNTING	NOTES	DETAIL REFERENCE
SF1	HORIZONTAL FLOOD LIGHT, SINGLE PIECE ALUMINUM DIE CAST HOUSING, TEMPERED GLASS LENS,ONE-PIECE SILICONE GASKET, DIE CAST ALUMINUM KNUCKLE WITH 5 DEGREE AIMING INCREMENTS, AND WIDE FLOOD DISTRIBUTION, UL LISTED FOR WET LOCATION.	277V	LED	43000	4000K	70	316 VA	ON STRUCTURE	MOUNT FIXTURE ON SHADE STRUCTURE FRAMING AT TOP OF VERTICAL SUPPORT MEMBERS PER MANUFACTURER RECOMMENDATIONS	C2/ES506
SL3	SINGLE HEAD LED POLE TOP WITH EXTRUDED ALUMINUM DRIVER ENCLOSURE, DIE-CAST ALUMINUM END-CAPS, SPECULAR OPTICAL REFLECTORS, RECTANGULAR EXTRUDED ALUMINUM SUPPORT ARM, DARK BRONZE POWDER COAT FINISH WITH TYPE III DISTRIBUTION.	277V	LED	7500	4000K	70	59 VA	25'-0" POLE	SEE A2/ES506 FOR POLE DETAIL	C1/ES506
SL4	SINGLE HEAD LED POLE TOP WITH EXTRUDED ALUMINUM DRIVER ENCLOSURE, DIE-CAST ALUMINUM END-CAPS, SPECULAR OPTICAL REFLECTORS, RECTANGULAR EXTRUDED ALUMINUM SUPPORT ARM, DARK BRONZE POWDER COAT FINISH WITH TYPE III DISTRIBUTION.	277V	LED	5000	4000K	70	34 VA	15'-0" POLE	SEE A2/ES506 FOR POLE DETAIL	C1/ES506
SL5	SINGLE HEAD LED POLE TOP WITH EXTRUDED ALUMINUM DRIVER ENCLOSURE, DIE-CAST ALUMINUM END-CAPS, SPECULAR OPTICAL REFLECTORS, RECTANGULAR EXTRUDED ALUMINUM SUPPORT ARM, GRAY POWDER COAT FINISH WITH TYPE II NARROW DISTRIBUTION.	480V	LED	11000	5000K	70	87 VA	45'-0" POLE, BURIED 10' IN GRADE.	SEE A3/ES506 FOR POLE DETAIL	C1/ES506

NOTE:
IF THIS DRAWING IS LESS THAN 34" X 22"
IT IS A REDUCED SIZE DRAWING

STM	DESCRIPTION	DATE	APPR
1	MOD P00005	05/2023	
2	MOD P00006 AND P00007	10/2025	

NAVFAC

NICHOLAS G. ZUBRZYCKI
LICENSE No 64299
STATE OF FLORIDA
PROFESSIONAL ENGINEER
SEAL

BAMFORTH
ENGINEERS • CONTRACTORS
A/E INFO

APPROVED
FOR COMMANDER NAVFAC

ACTIVITY
Approved by J. Scott Roberts,
Asset Management Branch Head &
Supervisory Facility Planner, PWD
Beaufort, SC via email.

SATISFACTORY TO DATE 12/15/2022

DES	RLW	DRW	RLW	CHK	KLM

PMDM KTB / RLH
BRANCH MANAGER JAS
CHIEF ENG/ARCH EJA
FP ENGINEER DSN

DEPARTMENT OF THE NAVY
NAVAL FACILITIES ENGINEERING SYSTEMS COMMAND
DC CORE:
MCAS BEAUFORT

NAVAL FACILITIES ENGINEERING SYSTEMS COMMAND ~ MID-ATLANTIC
NORFOLK, VA

BEAUFORT, SC

P-475 AIRCRAFT MAINTENANCE HANGAR - VOLUME 1 (BASE BID WITH OPTIONS)

LIGHTING FIXTURE SCHEDULE

SCALE:
EPROJECT NO.: 1363603
CONSTR. CONTR. NO.
NAVFAC DRAWING NO. 12859387
SHEET 215 OF 1412

ES701

DRAWFORM REVISION: 25 AUGUST 2020

Autodesk Docs://2042 VAF A1 320 F35 Maintenance Hangar/2042 F35 maint Hangar_Site Bid Option EL R17/2024 r4
11/12/2025 11:26:44 AM

PANEL: 1AHN1

LOCATION: SHADE STRUCTURE 3
FED FROM: 1AHSBN1
MOUNTING: RACK
ENCLOSURE: NEMA 4X STAINLESS STEEL
VOLTS: 480Y/277V
PHASES: 3
WIRE: 4
A.I.C. RATING: 35,000A
MAINS TYPE: MLO
BUS RATING: 600 A
MCB RATING: N/A

NOTES:

CKT	CIRCUIT DESCRIPTION	TRIP (AMPS)	POLES	PHASE A (VA)		PHASE B (VA)		PHASE C (VA)		POLES	TRIP (AMPS)	CIRCUIT DESCRIPTION	CKT
1	T-1ALN1	15	3	720	16667					3	100	AIRCRAFT POWER REC - SHADE STRUCTURE SS1 (NOTE 1)	2
3	--	--	--			540	16667			--	--	--	4
5	--	--	--					540	16667	--	--	--	6
7	AIRCRAFT POWER REC - SHADE STRUCTURE SS2 (NOTE 1)	100	3	16667	16667					3	100	AIRCRAFT POWER REC - SHADE STRUCTURE SS3 (NOTE 1)	8
9	--	--	--			16667	16667			--	--	--	10
11	--	--	--					16667	16667	--	--	--	12
13	AIRCRAFT POWER REC - SHADE STRUCTURE SS4 (NOTE 1)	100	3	16667	16667					3	100	AIRCRAFT POWER REC - SHADE STRUCTURE SS5 (NOTE 1)	14
15	--	--	--			16667	16667			--	--	--	16
17	--	--	--					16667	16667	--	--	--	18
19	LTG - SHADE STRUCTURE SS1	20	1	1896	10000					3	150	270VDC CONVERTER - SHADE STRUCTURE SS2 (NOTE 1)	20
21	LTG - SHADE STRUCTURE SS2	20	1			1896	10000			--	--	--	22
23	LTG - SHADE STRUCTURE SS3	20	1					1896	10000	--	--	--	24
25	LTG - SHADE STRUCTURE SS4	20	1	1896	10000					3	150	270VDC CONVERTER - SHADE STRUCTURE SS4 (NOTE 1)	26
27	LTG - SHADE STRUCTURE SS5	20	1			1896	10000			--	--	--	28
29	SPACE ONLY	--	1					--	10000	--	--	--	30
31	SPACE ONLY	--	1	--	--					1	--	SPACE ONLY	32
33	SPACE ONLY	--	1			--	--			1	--	SPACE ONLY	34
35	SPACE ONLY	--	1					--	--	1	--	SPACE ONLY	36
37	SPD	30	3	0	--					1	--	SPACE ONLY	38
39	--	--	--			0	--			1	--	SPACE ONLY	40
41	--	--	--					0	--	1	--	SPACE ONLY	42

TOTAL AMPS A-N:	390	107662	107482	105676	**KVA** / **AMPS**
TOTAL AMPS B-N:	389	**TOTAL CONNECTED:**	320.82	386	
TOTAL AMPS C-N:	382	**TOTAL DEMAND:**	188.93	227	

NOTES:
1. PROVIDE ELECTRONIC TRIP BREAKER WITH ADJUSTABLE LI TRIP FUNCTIONS.

PANEL: 1AHN2

LOCATION: SHADE STRUCTURE 8
FED FROM: 1AHSBN1
MOUNTING: RACK
ENCLOSURE: NEMA 4X STAINLESS STEEL
VOLTS: 480Y/277V
PHASES: 3
WIRE: 4
A.I.C. RATING: 35,000A
MAINS TYPE: MLO
BUS RATING: 600 A
MCB RATING: N/A

NOTES:

CKT	CIRCUIT DESCRIPTION	TRIP (AMPS)	POLES	PHASE A (VA)		PHASE B (VA)		PHASE C (VA)		POLES	TRIP (AMPS)	CIRCUIT DESCRIPTION	CKT
1	T-1ALN2	15	3	720	16667					3	100	AIRCRAFT POWER REC - SHADE STRUCTURE SS6 (NOTE 1)	2
3	--	--	--			540	16667			--	--	--	4
5	--	--	--					540	16667	--	--	--	6
7	AIRCRAFT POWER REC - SHADE STRUCTURE SS7 (NOTE 1)	100	3	16667	16667					3	100	AIRCRAFT POWER REC - SHADE STRUCTURE SS8 (NOTE 1)	8
9	--	--	--			16667	16667			--	--	--	10
11	--	--	--					16667	16667	--	--	--	12
13	AIRCRAFT POWER REC - SHADE STRUCTURE SS9 (NOTE 1)	100	3	16667	16667					3	100	AIRCRAFT POWER REC - SHADE STRUCTURE SS10 (NOTE 1)	14
15	--	--	--			16667	16667			--	--	--	16
17	--	--	--					16667	16667	--	--	--	18
19	LTG - SHADE STRUCTURE SS6	20	1	1896	10000					3	150	270VDC CONVERTER - SHADE STRUCTURE SS7 (NOTE 1)	20
21	LTG - SHADE STRUCTURE SS7	20	1			1896	10000			--	--	--	22
23	LTG - SHADE STRUCTURE SS8	20	1					1896	10000	--	--	--	24
25	LTG - SHADE STRUCTURE SS9	20	1	1896	10000					3	150	270VDC CONVERTER - SHADE STRUCTURE SS9 (NOTE 1)	26
27	LTG - SHADE STRUCTURE SS10	20	1			1896	10000			--	--	--	28
29	SPACE ONLY	--	1					--	10000	--	--	--	30
31	SPACE ONLY	--	1	--	--					1	--	SPACE ONLY	32
33	SPACE ONLY	--	1			--	--			1	--	SPACE ONLY	34
35	SPACE ONLY	--	1					--	--	1	--	SPACE ONLY	36
37	SPD	30	3	0	--					1	--	SPACE ONLY	38
39	--	--	--			0	--			1	--	SPACE ONLY	40
41	--	--	--					0	--	1	--	SPACE ONLY	42

TOTAL AMPS A-N:	390	107662	107482	105676	**KVA** / **AMPS**
TOTAL AMPS B-N:	389	**TOTAL CONNECTED:**	320.82	386	
TOTAL AMPS C-N:	382	**TOTAL DEMAND:**	188.93	227	

NOTES:
1. PROVIDE ELECTRONIC TRIP BREAKER WITH ADJUSTABLE LI TRIP FUNCTIONS.

PANEL: 1AHN3

LOCATION: SHADE STRUCTURE 13
FED FROM: 1AHSBN1
MOUNTING: RACK
ENCLOSURE: NEMA 4X STAINLESS STEEL
VOLTS: 480Y/277V
PHASES: 3
WIRE: 4
A.I.C. RATING: 35,000A
MAINS TYPE: MLO
BUS RATING: 600 A
MCB RATING: N/A

NOTES:

CKT	CIRCUIT DESCRIPTION	TRIP (AMPS)	POLES	PHASE A (VA)		PHASE B (VA)		PHASE C (VA)		POLES	TRIP (AMPS)	CIRCUIT DESCRIPTION	CKT
1	T-1ALN3	15	3	720	16667					3	100	AIRCRAFT POWER REC - SHADE STRUCTURE SS11 (NOTE 1)	2
3	--	--	--			540	16667			--	--	--	4
5	--	--	--					540	16667	--	--	--	6
7	AIRCRAFT POWER REC - SHADE STRUCTURE SS12 (NOTE 1)	100	3	16667	16667					3	100	AIRCRAFT POWER REC - SHADE STRUCTURE SS13 (NOTE 1)	8
9	--	--	--			16667	16667			--	--	--	10
11	--	--	--					16667	16667	--	--	--	12
13	AIRCRAFT POWER REC - SHADE STRUCTURE SS14 (NOTE 1)	100	3	16667	16667					3	100	AIRCRAFT POWER REC - SHADE STRUCTURE SS15 (NOTE 1)	14
15	--	--	--			16667	16667			--	--	--	16
17	--	--	--					16667	16667	--	--	--	18
19	LTG - SHADE STRUCTURE SS11	20	1	1896	10000					3	150	270VDC CONVERTER - SHADE STRUCTURE SS12 (NOTE 1)	20
21	LTG - SHADE STRUCTURE SS12	20	1			1896	10000			--	--	--	22
23	LTG - SHADE STRUCTURE SS13	20	1					1896	10000	--	--	--	24
25	LTG - SHADE STRUCTURE SS14	20	1	1896	10000					3	150	270VDC CONVERTER - SHADE STRUCTURE SS14 (NOTE 1)	26
27	LTG - SHADE STRUCTURE SS15	20	1			1896	10000			--	--	--	28
29	SPACE ONLY	--	1					--	10000	--	--	--	30
31	SPACE ONLY	--	1	--	--					1	--	SPACE ONLY	32
33	SPACE ONLY	--	1			--	--			1	--	SPACE ONLY	34
35	SPACE ONLY	--	1					--	--	1	--	SPACE ONLY	36
37	SPD	30	3	0	--					1	--	SPACE ONLY	38
39	--	--	--			0	--			1	--	SPACE ONLY	40
41	--	--	--					0	--	1	--	SPACE ONLY	42

TOTAL AMPS A-N:	390	107662	107482	105676	**KVA** / **AMPS**
TOTAL AMPS B-N:	389	**TOTAL CONNECTED:**	320.82	386	
TOTAL AMPS C-N:	382	**TOTAL DEMAND:**	188.93	227	

NOTES:
1. PROVIDE ELECTRONIC TRIP BREAKER WITH ADJUSTABLE LI TRIP FUNCTIONS.

PANEL: 1AHN4

LOCATION: SHADE STRUCTURE 18
FED FROM: 1AHSBN1
MOUNTING: RACK
ENCLOSURE: NEMA 4X STAINLESS STEEL
VOLTS: 480Y/277V
PHASES: 3
WIRE: 4
A.I.C. RATING: 35,000A
MAINS TYPE: MLO
BUS RATING: 600 A
MCB RATING: N/A

NOTES:

CKT	CIRCUIT DESCRIPTION	TRIP (AMPS)	POLES	PHASE A (VA)		PHASE B (VA)		PHASE C (VA)		POLES	TRIP (AMPS)	CIRCUIT DESCRIPTION	CKT
1	T-1ALN4	15	3	720	16667					3	100	AIRCRAFT POWER REC - SHADE STRUCTURE SS16 (NOTE 1)	2
3	--	--	--			540	16667			--	--	--	4
5	--	--	--					540	16667	--	--	--	6
7	AIRCRAFT POWER REC - SHADE STRUCTURE SS17 (NOTE 1)	100	3	16667	16667					3	100	AIRCRAFT POWER REC - SHADE STRUCTURE SS18 (NOTE 1)	8
9	--	--	--			16667	16667			--	--	--	10
11	--	--	--					16667	16667	--	--	--	12
13	AIRCRAFT POWER REC - SHADE STRUCTURE SS19 (NOTE 1)	100	3	16667	16667					3	100	AIRCRAFT POWER REC - SHADE STRUCTURE SS20 (NOTE 1)	14
15	--	--	--			16667	16667			--	--	--	16
17	--	--	--					16667	16667	--	--	--	18
19	LTG - SHADE STRUCTURE SS16	20	1	1896	10000					3	150	270VDC CONVERTER - SHADE STRUCTURE SS17 (NOTE 1)	20
21	LTG - SHADE STRUCTURE SS17	20	1			1896	10000			--	--	--	22
23	LTG - SHADE STRUCTURE SS18	20	1					1896	10000	--	--	--	24
25	LTG - SHADE STRUCTURE SS19	20	1	1896	10000					3	150	270VDC CONVERTER - SHADE STRUCTURE SS19 (NOTE 1)	26
27	LTG - SHADE STRUCTURE SS20	20	1			1896	10000			--	--	--	28
29	SPACE ONLY	--	1					--	10000	--	--	--	30
31	SPACE ONLY	--	1	--	--					1	--	SPACE ONLY	32
33	SPACE ONLY	--	1			--	--			1	--	SPACE ONLY	34
35	SPACE ONLY	--	1					--	--	1	--	SPACE ONLY	36
37	SPD	30	3	0	--					1	--	SPACE ONLY	38
39	--	--	--			0	--			1	--	SPACE ONLY	40
41	--	--	--					0	--	1	--	SPACE ONLY	42

TOTAL AMPS A-N:	390	107662	107482	105676	**KVA** / **AMPS**
TOTAL AMPS B-N:	389	**TOTAL CONNECTED:**	320.82	386	
TOTAL AMPS C-N:	382	**TOTAL DEMAND:**	188.93	227	

NOTES:
1. PROVIDE ELECTRONIC TRIP BREAKER WITH ADJUSTABLE LI TRIP FUNCTIONS.

NOTE:
IF THIS DRAWING IS LESS THAN 34" X 22"
IT IS A REDUCED SIZE DRAWING

1AHN1	1AHN2
1AHN3	1AHN4

STM	DESCRIPTION	DATE	APPR
1	MOD P00005	05/2023	
2	MOD P00006 AND P00007	10/2025	

NAVFAC

NICHOLAS G. ZUBRZYCKI LICENSE No 64299 STATE OF FLORIDA PROFESSIONAL ENGINEER

BAMFORTH ENGINEERS & CONTRACTORS

APPROVED
FOR COMMANDER NAVFAC 11/21/2025
ACTIVITY: Approved by J. Scott Roberts, Asset Management Branch Head & Supervisory Facility Planner, PWD Beaufort, SC via email.
SATISFACTORY TO DATE 12/15/2022

DES	RLW	DRW	RLW	CHK	KLM
PM/DM	KTB / RLH				
BRANCH MANAGER	JAS				
CHIEF ENG/ARCH	EJA				
FP ENGINEER	DSN				

NAVAL FACILITIES ENGINEERING SYSTEMS COMMAND
NORFOLK, VA

DEPARTMENT OF THE NAVY
NAVAL FACILITIES ENGINEERING SYSTEMS COMMAND ~ MID-ATLANTIC
DC CORE
MCAS BEAUFORT
BEAUFORT, SC
P-475 AIRCRAFT MAINTENANCE HANGAR - VOLUME 1 (BASE BID WITH OPTIONS)
PANEL SCHEDULES

SCALE:
EPROJECT NO.: 1363603
CONSTR. CONTR. NO.
NAVFAC DRAWING NO. 12859388
SHEET 216 OF 1412

ES801

DRAWFORM REVISION: 25 AUGUST 2020

Autodesk Docs://00042 _MF-AT 000 F35 Maintenance Hangar/00042 F35 maint Hangar_Site Bid Option EL-RVT2024.rvt
11/12/2025 11:56:52 AM

PANEL: 1ALN1

LOCATION: SHADE STRUCTURE 3 | **VOLTS:** 208Y/120V | **A.I.C. RATING:** 10,000A
FED FROM: T-1ALN1 | **PHASES:** 3 | **MAINS TYPE:** MCB
MOUNTING: RACK | **WIRE:** 4 | **BUS RATING:** 100 A
ENCLOSURE: NEMA 4X STAINLESS STEEL | **MCB RATING:** 50A

NOTES: THE MAIN CIRCUIT BREAKER SHALL BE ELECTRONIC TRIP WITH ADJUSTABLE LI TRIP FUNCTIONS. PROVIDE 100A FRAME.

CKT	CIRCUIT DESCRIPTION	TRIP (AMPS)	POLES	PHASE A (VA)		PHASE B (VA)		PHASE C (VA)		POLES	TRIP (AMPS)	CIRCUIT DESCRIPTION	CKT
1	REC - SHADE STRUCTURE SS1	20	1	180	180					1	20	REC - SHADE STRUCTURE SS2	2
3	REC - SHADE STRUCTURE SS3	20	1			180	180			1	20	REC - SHADE STRUCTURE SS4	4
5	REC - SHADE STRUCTURE SS5	20	1					180	180	1	20	REC - TELECOM PEDESTAL SS1	6
7	SPARE	20	1	0	180					1	20	REC - TELECOM PEDESTAL SS2	8
9	SPACE ONLY	--	1			--	180			1	20	REC - TELECOM PEDESTAL SS3	10
11	SPACE ONLY	--	1					--	180	1	20	REC - TELECOM PEDESTAL SS4	12
13	SPACE ONLY	--	1	--	180					1	20	REC - TELECOM PEDESTAL SS5	14
15	SPACE ONLY	--	1			--	--			1	--	SPACE ONLY	16
17	SPACE ONLY	--	1					--	--	1	--	SPACE ONLY	18
19	SPD	30	3	0	--					1	--	SPACE ONLY	20
21	--	--	--			0	--			1	--	SPACE ONLY	22
23	--	--	--					0	--	1	--	SPACE ONLY	24
	TOTAL AMPS A-N:	6		720		540		540		**KVA**	**AMPS**		
	TOTAL AMPS B-N:	5							**TOTAL CONNECTED:**	1.80	5		
	TOTAL AMPS C-N:	5							**TOTAL DEMAND:**	0.90	2		

NOTES:

PANEL: 1ALN2

LOCATION: SHADE STRUCTURE 8 | **VOLTS:** 208Y/120V | **A.I.C. RATING:** 10,000A
FED FROM: T-1ALN2 | **PHASES:** 3 | **MAINS TYPE:** MCB
MOUNTING: RACK | **WIRE:** 4 | **BUS RATING:** 100 A
ENCLOSURE: NEMA 4X STAINLESS STEEL | **MCB RATING:** 50A

NOTES: THE MAIN CIRCUIT BREAKER SHALL BE ELECTRONIC TRIP WITH ADJUSTABLE LI TRIP FUNCTIONS. PROVIDE 100A FRAME.

CKT	CIRCUIT DESCRIPTION	TRIP (AMPS)	POLES	PHASE A (VA)		PHASE B (VA)		PHASE C (VA)		POLES	TRIP (AMPS)	CIRCUIT DESCRIPTION	CKT
1	REC - SHADE STRUCTURE SS6	20	1	180	180					1	20	REC - SHADE STRUCTURE SS7	2
3	REC - SHADE STRUCTURE SS8	20	1			180	180			1	20	REC - SHADE STRUCTURE SS9	4
5	REC - SHADE STRUCTURE SS10	20	1					180	180	1	20	REC - TELECOM PEDESTAL SS6	6
7	SPARE	20	1	0	180					1	20	REC - TELECOM PEDESTAL SS7	8
9	SPACE ONLY	--	1			--	180			1	20	REC - TELECOM PEDESTAL SS8	10
11	SPACE ONLY	--	1					--	180	1	20	REC - TELECOM PEDESTAL SS9	12
13	SPACE ONLY	--	1	--	180					1	20	REC - TELECOM PEDESTAL SS10	14
15	SPACE ONLY	--	1			--	--			1	--	SPACE ONLY	16
17	SPACE ONLY	--	1					--	--	1	--	SPACE ONLY	18
19	SPD	30	3	0	--					1	--	SPACE ONLY	20
21	--	--	--			0	--			1	--	SPACE ONLY	22
23	--	--	--					0	--	1	--	SPACE ONLY	24
	TOTAL AMPS A-N:	6		720		540		540		**KVA**	**AMPS**		
	TOTAL AMPS B-N:	5							**TOTAL CONNECTED:**	1.80	5		
	TOTAL AMPS C-N:	5							**TOTAL DEMAND:**	0.90	2		

NOTES:

PANEL: 1ALN3

LOCATION: SHADE STRUCTURE 13 | **VOLTS:** 208Y/120V | **A.I.C. RATING:** 10,000A
FED FROM: T-1ALN3 | **PHASES:** 3 | **MAINS TYPE:** MCB
MOUNTING: RACK | **WIRE:** 4 | **BUS RATING:** 100 A
ENCLOSURE: NEMA 4X STAINLESS STEEL | **MCB RATING:** 50A

NOTES: THE MAIN CIRCUIT BREAKER SHALL BE ELECTRONIC TRIP WITH ADJUSTABLE LI TRIP FUNCTIONS. PROVIDE 100A FRAME.

CKT	CIRCUIT DESCRIPTION	TRIP (AMPS)	POLES	PHASE A (VA)		PHASE B (VA)		PHASE C (VA)		POLES	TRIP (AMPS)	CIRCUIT DESCRIPTION	CKT
1	REC - SHADE STRUCTURE SS11	20	1	180	180					1	20	REC - SHADE STRUCTURE SS12	2
3	REC - SHADE STRUCTURE SS13	20	1			180	180			1	20	REC - SHADE STRUCTURE SS14	4
5	REC - SHADE STRUCTURE SS15	20	1					180	180	1	20	REC - TELECOM PEDESTAL SS11	6
7	SPARE	20	1	0	180					1	20	REC - TELECOM PEDESTAL SS12	8
9	SPACE ONLY	--	1			--	180			1	20	REC - TELECOM PEDESTAL SS13	10
11	SPACE ONLY	--	1					--	180	1	20	REC - TELECOM PEDESTAL SS14	12
13	SPACE ONLY	--	1	--	180					1	20	REC - TELECOM PEDESTAL SS15	14
15	SPACE ONLY	--	1			--	--			1	--	SPACE ONLY	16
17	SPACE ONLY	--	1					--	--	1	--	SPACE ONLY	18
19	SPD	30	3	0	--					1	--	SPACE ONLY	20
21	--	--	--			0	--			1	--	SPACE ONLY	22
23	--	--	--					0	--	1	--	SPACE ONLY	24
	TOTAL AMPS A-N:	6		720		540		540		**KVA**	**AMPS**		
	TOTAL AMPS B-N:	5							**TOTAL CONNECTED:**	1.80	5		
	TOTAL AMPS C-N:	5							**TOTAL DEMAND:**	0.90	2		

NOTES:

PANEL: 1ALN4

LOCATION: SHADE STRUCTURE 18 | **VOLTS:** 208Y/120V | **A.I.C. RATING:** 10,000A
FED FROM: T-1ALN4 | **PHASES:** 3 | **MAINS TYPE:** MCB
MOUNTING: RACK | **WIRE:** 4 | **BUS RATING:** 100 A
ENCLOSURE: NEMA 4X STAINLESS STEEL | **MCB RATING:** 50A

NOTES: THE MAIN CIRCUIT BREAKER SHALL BE ELECTRONIC TRIP WITH ADJUSTABLE LI TRIP FUNCTIONS. PROVIDE 100A FRAME.

CKT	CIRCUIT DESCRIPTION	TRIP (AMPS)	POLES	PHASE A (VA)		PHASE B (VA)		PHASE C (VA)		POLES	TRIP (AMPS)	CIRCUIT DESCRIPTION	CKT
1	REC - SHADE STRUCTURE SS16	20	1	180	180					1	20	REC - SHADE STRUCTURE SS17	2
3	REC - SHADE STRUCTURE SS18	20	1			180	180			1	20	REC - SHADE STRUCTURE SS19	4
5	REC - SHADE STRUCTURE SS20	20	1					180	180	1	20	REC - TELECOM PEDESTAL SS16	6
7	SPARE	20	1	0	180					1	20	REC - TELECOM PEDESTAL SS17	8
9	SPACE ONLY	--	1			--	180			1	20	REC - TELECOM PEDESTAL SS18	10
11	SPACE ONLY	--	1					--	180	1	20	REC - TELECOM PEDESTAL SS19	12
13	SPACE ONLY	--	1	--	180					1	20	REC - TELECOM PEDESTAL SS20	14
15	SPACE ONLY	--	1			--	--			1	--	SPACE ONLY	16
17	SPACE ONLY	--	1					--	--	1	--	SPACE ONLY	18
19	SPD	30	3	0	--					1	--	SPACE ONLY	20
21	--	--	--			0	--			1	--	SPACE ONLY	22
23	--	--	--					0	--	1	--	SPACE ONLY	24
	TOTAL AMPS A-N:	6		720		540		540		**KVA**	**AMPS**		
	TOTAL AMPS B-N:	5							**TOTAL CONNECTED:**	1.80	5		
	TOTAL AMPS C-N:	5							**TOTAL DEMAND:**	0.90	2		

NOTES:

NOTE:
IF THIS DRAWING IS LESS THAN 34" X 22"
IT IS A REDUCED SIZE DRAWING

1ALN1	1ALN2
1ALN3	1ALN4

STM	DESCRIPTION	DATE	APPR
1	MOD P00005	05/2023	
2	MOD P00006 AND P00007	10/2025	

NAVFAC

NICHOLAS G. ZUBRZYCKI LICENSED No 64299 STATE OF FLORIDA PROFESSIONAL ENGINEER

BAMFORTH ENGINEERS & ARCHITECTS

AE INFO

APPROVED
FOR COMMANDER NAVFAC 11/21/2025

ACTIVITY
Approved by J. Scott Roberts.
Asset Management Branch Head &
Supervisory Facility Planner, PWD
Beaufort, SC via email.

SATISFACTORY TO DATE 12/15/2022

DES	RLW	DRW	RLW	CHK	KLM
PM/DM	KTB / RLH				
BRANCH MANAGER	JAS				
CHIEF ENG/ARCH	EJA				
FP ENGINEER	DSN				

DEPARTMENT OF THE NAVY
NAVAL FACILITIES ENGINEERING SYSTEMS COMMAND
DC CORE
NAVAL FACILITIES ENGINEERING SYSTEMS COMMAND ~ MID-ATLANTIC
NORFOLK, VA
MCAS BEAUFORT
BEAUFORT, SC
P-475 AIRCRAFT MAINTENANCE HANGAR - VOLUME 1 (BASE BID WITH OPTIONS)
PANEL SCHEDULES

SCALE:
EPROJECT NO.: 1363603
CONSTR. CONTR. NO.
NAVFAC DRAWING NO. 12859389
SHEET 217 OF 1412

ES802

DRAWFORM REVISION: 25 AUGUST 2020

Autodesk Docs://20042 MFA1 502 F35 Maintenance Hangar/20042 F35 maint Hangar_Site Bid Option EL-INV/20024.rvt
11/12/2025 11:50:28 AM