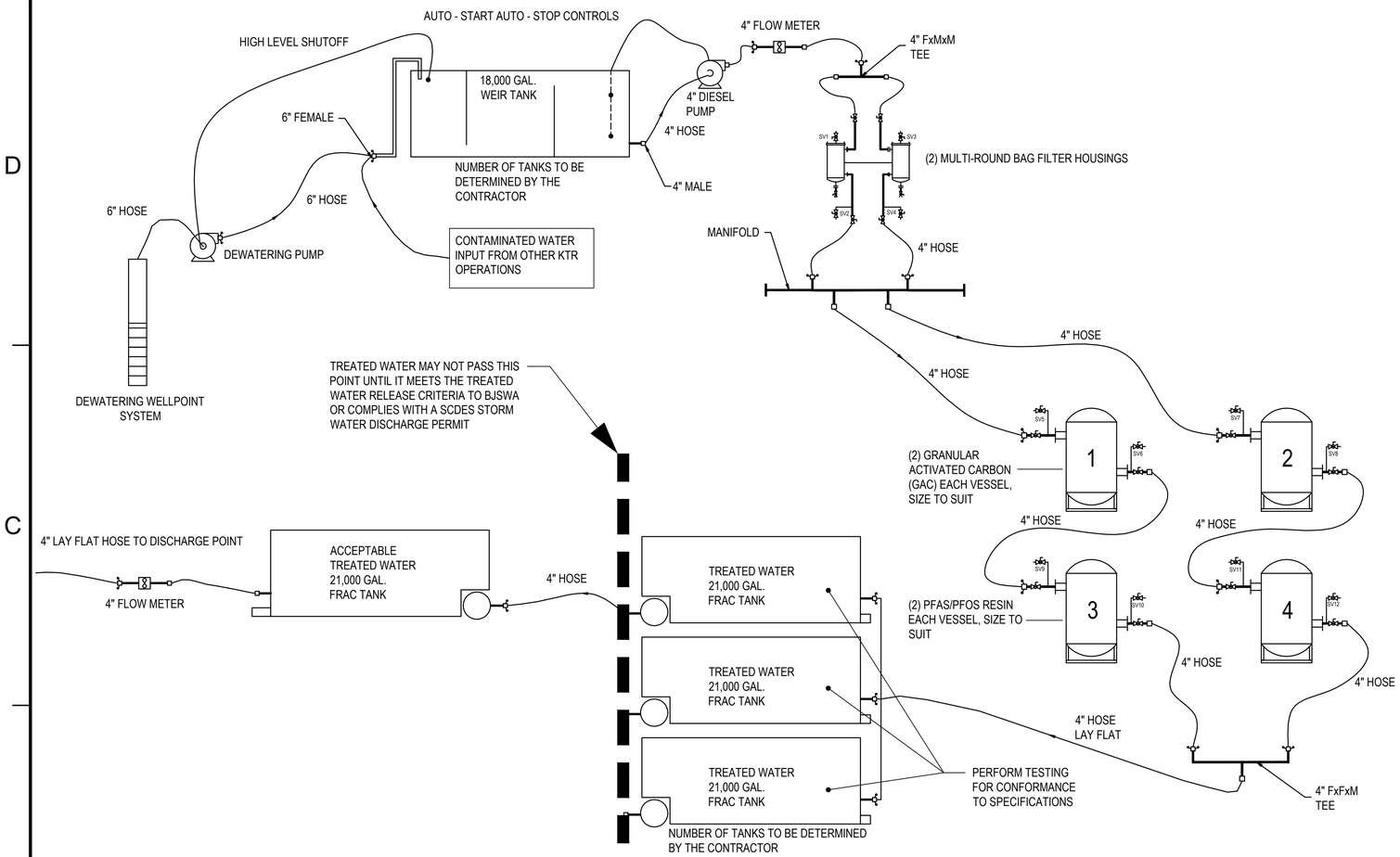

DEWATERING TREATMENT CONCEPT DIAGRAM

N.T.S.

TREATED WATER RELEASE CRITERIA TO BJWSA

1. MCAS BEAUFORT WILL BE DISCHARGING NON–DOMESTIC WASTEWATER INTO THE BJWSA PORT ROYAL WATER RECLAMATION FACILITY (WRF) WASTEWATER COLLECTION SYSTEM. DISCHARGES MUST COMPLY WITH PARAGRAPH H.13 INDUSTRIAL PRETREATMENT PROGRAM (IPP). IN ADDITION TO THIS, DISCHARGES MUST COMPLY WITH SEWER USE REGULATION (SUR) AND ANY APPLICABLE STATE AND FEDERAL PRETREATMENT LAWS, REGULATIONS, STANDARDS, AND REQUIREMENTS, INCLUDING ANY SUCH LAWS, REGULATIONS, STANDARDS, OR REQUIREMENTS THAT MIGHT BECOME EFFECTIVE DURING THE DISCHARGE PERIOD. THE WASTEWATER WILL BE DISCHARGED INTO A LOCATION(S) AGREED UPON BY THE GOVERNMENT AND BJWSA, AND AT A FLOW RATE THAT MUST NOT OVERCOME THE CAPACITY OF THE LOCAL WASTEWATER COLLECTION SYSTEM. SEE SHEET CU102 FOR THE DISCHARGE POINT IDENTIFIED AS SANITARY STRUCTURE #45.

2. ACCORDING TO SCDES THE PRETREATMENT OF THE DEWATERING EFFLUENT MUST BE COVERED UNDER A PILOT STUDY REQUEST. THE REQUEST WILL NEED TO BE SUBMITTED VIA EPERMITTING. COORDINATE WITH NREAO AND SCDES AS REQUIRED. THE PILOT STUDY REQUEST MUST INCLUDE THE FOLLOWING: (1) PILOT STUDY PROPOSAL, (2) PROCESS FLOW DIAGRAMS, AS NEEDED, (3) DURATION OF PILOT STUDY, AND (4) ACCEPTANCE LETTERS FROM RECEIVING FACILITIES, IF DISPOSAL IS NEEDED OF SOLIDS/SLUDGE OR WASTEWATERS. THE SCDES PRETREATMENT COORDINATOR IS KAYSE JARMAN (KAYSE.JARMAN@DES.SC.GOV, 803–898–0076). THE PRETREATMENT PROGRAM SUPERVISOR FOR BJWSA IS OLIVER SIMMONS (OLIVER.SIMMONS@BJWSA.ORG, 843–987–9200. SEE SPECIFICATION SECTION 02 61 13 FOR ADDITIONAL REQUIREMENTS.

3. WATER COLLECTED FOR THE PURPOSE OF REMOVING PFOS/PFOA CONTAMINATION CAN BE DISCHARGED TO THE SANITARY SEWER SYSTEM PROVIDED THAT PH RANGES FROM 6.0–9.5 SU AND CONTAMINATION LEVELS ARE BELOW APPLICABLE SCREENING CRITERIA, EPA MCLS AND/OR REGIONAL SCREENING LEVELS (RSLS). THE CURRENT EPA MCLS ARE 4 PARTS PER TRILLION (PPT) FOR PFOA, PFOS, AND 10 PPT FOR PFHXS, PFNA, AND HFPO–DA. THE DISCHARGE MUST BE RECORDED DAILY AND REPORTED BACK TO BJWSA MONTHLY. DISCHARGES WILL BE LOGGED IN THE DISCHARGE MONITORING REPORT (DMR) FORM. MAXIMUM DISCHARGE RATE CANNOT EXCEED 50 GPM. DISCHARGE TO BE DIRECTED TO SANITARY MANHOLE SHOWN ON CIVIL DRAWINGS.

4. CONCENTRATIONS OF THE CONSTITUENTS OF CONCERN WILL BE ANALYZED BY US EPA METHOD 537 MODIFIED (OR THE MOST APPLICABLE DOD APPROVED METHOD FOR THE MATRIX BEING ANALYZED). WATER DISCHARGED TO THE SANITARY SEWER SYSTEM WILL BE BILLED AT BJWSA'S MOST CURRENT COMMERCIAL SEWER RATE, CURRENTLY $6.59 PER THOUSAND GALLONS, AND IS SUBJECT TO ANNUAL INCREASES AS APPROVED BY THE BJWSA BOARD OF DIRECTORS. THE AMOUNT DISCHARGED WILL BE MEASURED BY STORAGE TANK LEVEL INDICATORS, TOTALIZERS OR OTHER METHOD AGREED UPON BY BOTH THE GOVERNMENT AND BJWSA. MONITORING RESULTS MUST BE SUMMARIZED AND REPORTED TO BJWSA. REPORTS ARE DUE 15 DAYS AFTER THE END OF EACH CALENDAR MONTH AND MUST BE EMAILED TO PRETREATMENT@BJWSA.ORG. CHARGES WILL BE BILLED MONTHLY AND INCLUDED WITH THE MCAS WHOLESALE BILL UNDER LINE ITEM "PRETREATMENT CHARGES".

5. THE GOVERNMENT MUST NOTIFY BJWSA OF ANY VIOLATION OF CONTAMINATION LEVELS ABOVE IMMEDIATELY.

DOES THE TREATED WATER MEET THE CURRENT BJWSA INFLUENT CRITERIA?

YES → ACCEPTABLE TREATED WATER MAY BE DISCHARGED TO BJWSA

NO → TREATMENT SYSTEM MUST BE MODIFIED. WATER MUST BE RE-TREATED UNTIL BJWSA INFLUENT CRITERIA IS MET. MODIFICATIONS AT CONTRACTOR'S EXPENSE.

DEWATERING AND TREATMENT GENERAL NOTES (CE501)

1. COORDINATE ALL ENVIRONMENTAL WORK WITH THE MARINE CORPS AIR STATION (MCAS) BEAUFORT NATURAL RESOURCES AND ENVIRONMENTAL AFFAIRS (NREAO) OFFICE, SOUTH CAROLINA DEPARTMENT OF ENVIRONMENTAL SERVICES (SCDES) AND BEAUFORT–JASPER WATER AND SEWER AUTHORITY (BJWSA) PRIOR TO WORK. ENVIRONMENTAL SUBMITTALS TO FEDERAL AND STATE AGENCIES MUST BE ROUTED AND APPROVED BY THE NREAO OFFICE FOR SUBMISSION. DO NOT CONTACT SCDES WITHOUT SPECIFIC DIRECTION AND AUTHORIZATION FROM NREAO.

2. GROUNDWATER SAMPLING HAS BEEN PERFORMED IN THE VICINITY OF THE EXISTING HANGAR 414. ANALYTICAL RESULTS IDENTIFIED PETROLEUM HYDROCARBON SUBSTANCES AND PER– AND POLYFLUORALKYL SUBSTANCES (PFAS) IN THE GROUNDWATER. TREAT ALL GROUNDWATER AS PETROLEUM HYDROCARBON AND PFAS CONTAMINATED. SEE THE ENVIRONMENTAL REPORT, AS AN APPENDIX TO THE SPECIFICATIONS, FOR ADDITIONAL INFORMATION.

3. THE EXISTING FIRE LOOP WATER IS CONTAMINATED WITH PFAS. THE TOTAL PFAS CONCENTRATION IN THE FIRE LOOP WATER RANGES FROM APPROXIMATELY 48 NG/L TO 40,000 NG/L. THE FIRE LOOP COMMISSIONING IS ESTIMATED TO GENERATE APPROXIMATELY 147,000 GALLONS OF PFAS CONTAMINATED WATER. ALL FIRE LOOP WATER MUST BE COLLECTED AND PROPERLY TREATED PRIOR TO DISCHARGE.

4. SEE CIVIL DRAWINGS FOR COORDINATION.

5. PREPARE PERMITS AND REGISTRATION STATEMENTS ASSOCIATED WITH CONSTRUCTION DEWATERING, GROUNDWATER WITHDRAWAL, TREATMENT AND DISCHARGE AS REQUIRED BY SCDES AND BJSWA.

6. THE GROUNDWATER DEWATERING AND TREATMENT SYSTEM IS A DELEGATED DESIGN. DEWATER IN ACCORDANCE WITH SPECIFICATION 32 23 19. PROVIDE DEWATERING NECESSARY TO KEEP THE CONSTRUCTION AND WORK AREAS DRY. DESIGN, PROVIDE, INSTALL, OPERATE AND MAINTAIN AN ADEQUATE SYSTEM. THE SYSTEM MUST BE OF SUFFICIENT SIZE AND CAPACITY TO MAINTAIN A DRY CONDITION WITHOUT DELAYS TO CONSTRUCTION OPERATIONS. DEWATERING SYSTEM DESIGN MUST BE PERFORMED BY A PROFESSIONAL ENGINEER. PERFORM ADDITIONAL TEST BORINGS AND OTHER EXPLORATORY OPERATIONS NECESSARY FOR DEWATERING AND TREATMENT DESIGN.

7. PROVIDE TREATMENT EQUIPMENT TO TREAT EFFLUENT FROM DEWATERING OPERATIONS ON THE CONSTRUCTION SITE. DESIGN, PROVIDE, INSTALL, OPERATE AND MAINTAIN AN ADEQUATE SYSTEM. TREATED DEWATERING EFFLUENT MUST BE DISCHARGED TO THE BEAUFORT–JASPER WATER AND SEWER AUTHORITY (BJWSA) AS DESCRIBED BELOW OR TO THE STORM DRAIN IN ACCORDANCE WITH SCDES REGULATIONS. ALL TREATED DEWATERING EFFLUENT MUST MEET THE DEPARTMENT OF THE NAVY (DON) PFAS STANDARD FOR DRINKING WATER, ENVIRONMENTAL PROTECTION AGENCY (EPA) PFAS MAXIMUM CONTAMINANT LEVELS (MCLS) FOR DRINKING WATER AND ALL OTHER CURRENT SANITARY INFLUENT STANDARDS FOR ACCEPTANCE BY BJWSA, SEE THE "TREATED WATER RELEASE CRITERIA TO BJSWA" BELOW; OR STORM WATER DISCHARGE STANDARDS IN ACCORDANCE WITH SCDES.

8. SUBMIT A DEWATERING AND TREATMENT PLAN FOR APPROVAL OF THE CONTRACTING OFFICER PRIOR TO INITIATION OF ANY CONSTRUCTION OR EXCAVATION OPERATIONS. THE PLAN MUST SHOW ALL FACILITIES AND EQUIPMENT AND ADDRESS THE DISPOSAL OF SPENT MEDIA AND DECONTAMINATION OF TREATMENT SYSTEM AS REQUIRED BY DON AND MARINE CORPS POLICY (MCBUL 11000). MARINE CORPS POLICY MCBUL 11000 IS AN ATTACHMENT TO THE ENVIRONMENTAL REPORT.

9. THE CONCEPT DIAGRAM SHOWN IN THIS SHEET IS AN EXAMPLE OF A TYPICAL PETROLEUM AND PFAS GROUNDWATER TREATMENT SYSTEM. PROVIDE A TREATMENT SYSTEM CAPABLE OF TREATING PETROLEUM AND PFAS CONTAMINATED GROUNDWATER AND FIRE LOOP WATER. THE SYSTEM MUST BE CAPABLE OF TREATING THE CONTAMINATED GROUNDWATER TO MEET THE CURRENT SANITARY INFLUENT REQUIRMENTS OF BJWSA. THE SYSTEM MUST ALSO BE CAPABLE OF TREATING THE PFAS CONTAMINATED GROUNDWATER AND FIRE LOOP WATER TO MEET THE DEPARTMENT OF THE NAVY STANDARD FOR DRINKING WATER, THE EPA MCL FOR DRINKING WATER AND THE CURRENT SANITARY INFLUENT REQUIREMENTS OF BJWSA.

10. TREATED WATER MUST BE SAMPLED AND ANALYZED IN ACCORDANCE WITH SPECIFICATION SECTION 02 61 13.

11. MANAGE WASTE IN ACCORDANCE WITH ALL LOCAL, STATE AND FEDERAL REGULATIONS INCLUDING 40 CFR 261 AND 40 CFR 262. COMPLY WITH ALL INSTALLATION, NREAO, AND NAVFAC ENVIRONMENTAL REQUIREMENTS.

SYM	DESCRIPTION	DATE	APPR
	MOD P00006 AND MOD P00007	10/2025	
	MOD P00005	05/2023	

NAVFAC

COMMONWEALTH OF VIRGINIA
HUGH N. ADCOCK, JR.
Lic. No. 015231
01/13/23
PROFESSIONAL ENGINEER
SEAL

BAMFORTH ENGINEERS + SURVEYORS
A/E INFO

APPROVED
FOR COMMANDER NAVFAC
ACTIVITY
Approved by J. Scott Roberts, Asset Management Branch Head & Supervisory Facility Planner, PWD Beaufort, SC via email.
SATISFACTORY TO DATE 12/15/2022

DES	HNA	DRW	HNA	CHK	SAB
PM/DM	KTB/RLH				
BRANCH MANAGER	DLB				
CHIEF ENG/ARCH	EJA				
FIRE PROTECTION	DSN				

DEPARTMENT OF THE NAVY
NAVAL FACILITIES ENGINEERING SYSTEMS COMMAND
NAVAL FACILITIES ENGINEERING SYSTEMS COMMAND - MID-ATLANTIC NORFOLK, VA
DC CORE
MCAS BEAUFORT
BEAUFORT, SC
P-475 AIRCRAFT MAINTENANCE HANGAR - VOLUME 1 (BASE BID WITH OPTIONS)
DEWATERING TREATMENT CONCEPT DIAGRAM

SCALE: NONE
EPROJECT NO.: 1363603
CONSTR. CONTR. NO. TBD
NAVFAC DRAWING NO. 12859234
SHEET 62 OF 1412
CE501

DRAWFORM REVISION: 25 AUGUST 2020