SINGLE LINE DIAGRAM

SYMBOL	DESCRIPTION
1AHN1	PANELBOARD. WHEN ADDITIONAL SYMBOL(S) ARE INCLUDED, THEY INDICATE THE FOLLOWING: MAIN CIRCUIT BREAKER. SEE PANEL SCHEDULE FOR SIZE. IF NOT PRESENT, PANELBOARD WITH MAIN LUGS ONLY.
3P 100 A	CIRCUIT BREAKER WITH NUMBER OF POLES AND TRIP RATING AS INDICATED.
3P 100 A ETM L	ELECTRONIC TRIP CIRCUIT BREAKER INTEGRAL POWER MONITORING METER. NUMBER OF POLES AND TRIP RATING AS INDICATED. METERING IDENTIFICATION CODES AS FOLLOWS: L - LIGHTING LOADS R - RECEPTACLE LOADS M - HVAC LOADS
	ADDITIONAL CIRCUIT BREAKER SUBSCRIPTS INDICATE THE FOLLOWING: ET - SOLID STATE ELECTRONIC TRIP CIRCUIT BREAKER WITH FIELD ADJUSTABLE LONG TIME PICKUP, SHORT TIME PICKUP, SHORT TIME DELAY, AND INSTANTANEOUS TRIP FUNCTIONS. INCLUDE ADJUSTABLE GROUND FAULT PICKUP AND GROUND FAULT DELAY TRIP FUNCTIONS WHERE GROUND FAULT PROTECTION IS INDICATED.
M	MULTIFUNCTION DIGITAL POWER CIRCUIT MONITOR.
Δ Y	POWER TRANSFORMER WITH DELTA CONNECTED PRIMARY, WYE CONNECTED SECONDARY AND RATING AS INDICATED.
SPD	PARALLEL CONNECTED SURGE PROTECTIVE DEVICE. SEE SURGE PROTECTIVE DEVICE SCHEDULE ON SHEET PEP800.
	FEEDER CONTINUATION SYMBOL
A1	FEEDER REFERENCE
OEP600	SHEET ON WHICH FEEDER IS CONTINUED
1PBLD1	EQUIPMENT OR PANEL TO WHICH FEEDER IS CONNECTED

POWER DISTRIBUTION EQUIPMENT CODES

1PBLD1

EQUIPMENT CODE:
- 1,2,3 - SEQUENCE
- N - NORMAL BRANCH
- D - DISTRIBUTION PANEL (WHERE PRESENT)
- L - 208Y/120V
- B - BUILDING AREA
- BUILDING DESIGNATION:
- P - PARKING GARAGE
- FLOOR LEVEL

POWER DISTRIBUTION

SYMBOL	DESCRIPTION	MOUNTING
	SURFACE MOUNTED PANELBOARD	72" AFF TO TOP
	SURFACE MOUNTED DISTRIBUTION PANELBOARD	72" AFF TO TOP
	GROUNDING BUS BAR, SUBSCRIPT INDICATES NAME. REFER TO C1/PEP501 FOR DETAIL.	18" AFF TO TOP
30A 3R	600V, 3P, NON-FUSED DISCONNECT SWITCH. ALL DISCONNECT SWITCHES SHALL BE NEMA 1 UNLESS OTHERWISE INDICATED. SUBSCRIPTS INDICATE THE FOLLOWING: 30A - AMPERE RATING 3R - NEMA ENCLOSURE OTHER THAN NEMA 1 (3R, 4X, ETC...)	72" AFF TO TOP

WIRING DEVICES

NOTES: ALL MOUNTING HEIGHTS ARE TO TOP, UON

SUBSCRIPTS FOR RECEPTACLES INDICATE THE FOLLOWING:
- G - RECEPTACLE WITH INTEGRAL GFCI.
- WP - RECEPTACLE WITH WEATHER RESISTANT MARKING (WR) MOUNTED IN A IN-USE WEATHER PROOF ENCLOSURE.
- +48"- MOUNT AT 48" AFF TO CENTER. OTHER MOUNTING HEIGHTS AS INDICATED.

SYMBOL	DESCRIPTION	MOUNTING
	20A, 125V DUPLEX RECEPTACLE.	18" AFF

CONDUIT AND CONDUCTORS

SYMBOL	DESCRIPTION
	BRANCH CIRCUIT WIRING IN CONDUIT. 1/2"C - 2#12 + 1#12 GND UON. PROVIDE ADDITIONAL SWITCHED CONDUCTORS OR TRAVELER CONDUCTORS FOR LIGHTING CIRCUITS AS REQUIRED TO SUPPORT THE INDICATED SWITCHING.
	HOMERUN TO PANELBOARD: 1PBLN1 - 1,3,5 CIRCUIT DESIGNATION. PANELBOARD DESIGNATION.

EQUIPMENT CONNECTIONS

SYMBOL	DESCRIPTION	MOUNTING
E FCU/A	CONNECTION TO EQUIPMENT LEADS, TERMINAL STRIPS OR CONTROL PANEL INCLUDING ALL CONDUCTORS, CONDUIT, FLEXIBLE CONDUIT, JUNCTION BOXES, CONNECTORS, FITTINGS, ETC., REQUIRED FOR PROPER CONNECTION. COORDINATE EXACT LOCATION WITH THE SUPPLIED EQUIPMENT. SUBSCRIPT INDICATES EQUIPMENT IDENTIFICATION.	AS REQUIRED

LIGHTNING PROTECTION SYSTEM

SYMBOL	DESCRIPTION
	AIR TERMINAL. SUBSCRIPTS INDICATE THE FOLLOWING: A - STANDING SEAM METAL ROOF MOUNTED AIR TERMINAL. SEE C2/PEQ501 FOR DETAIL. B - ADHESIVE TYPE AIR TERMINAL MOUNTED ON PHOTOVOLTAIC CANOPY STRUCTURE. SEE A4/PEQ501 FOR DETAIL. TYPE "B" AIR TERMINALS SHALL BE 24" TALL.
	LIGHTNING PROTECTION SYSTEM ROOF CONDUCTOR.
GL	LIGHTNING PROTECTION SYSTEM GROUND LOOP CONDUCTOR. BURY IN DIRECT CONTACT WITH EARTH AT 24" BELOW FINISHED GRADE.
	GROUND RODS BONDED TO GROUND LOOP CONDUCTOR. SEE A2/PEQ501 FOR DETAIL.
	BONDING CONNECTION.
DNP	DOWN CONDUCTOR. SEE SHEET PEQ131 FOR REQUIREMENTS.

MISCELLANEOUS

SYMBOL	DESCRIPTION	MOUNTING
00	KEY NOTE SYMBOL.	NA
	ELECTRICAL GROUND	NA
	CONDUCTOR CONNECTION	NA

LINE TYPES

LINE TYPE	DESCRIPTION
	SOLID LINES INDICATE EQUIPMENT PROVIDED IN THIS CONTRACT.
	SCREENED LINES INDICATE EXISTING EQUIPMENT.
	DASHED LINES INDICATE EQUIPMENT REMOVED IN THIS CONTRACT.
	HATCH LINES INDICATE EQUIPMENT REMOVED IN THIS CONTRACT.

LUMINAIRES

NOTES:
1. SEE LIGHTING FIXTURE SCHEDULE FOR FIXTURE TYPES.
2. OTHER FIXTURE DIMENSIONS AND SHAPES ARE AS INDICATED ON LIGHTING PLANS.

BATTERY INVERTER IDENTIFICATION (TYPICAL FOR ALL FIXTURES)
- NORMAL POWER.
- BATTERY INVERTER
- NORMAL POWER.
- BATTERY INVERTER

SYMBOL	DESCRIPTION	SYMBOL
	PENDANT MOUNTED INDUSTRIAL LUMINAIRE.	CEILING
	WALL MOUNTED LUMINAIRE.	WALL
	WALL MOUNTED LUMINAIRE.	WALL
	PENDANT MOUNTED AREA LIGHT.	CEILING
	EXIT SIGN. SHADED PORTION DENOTES FACE(S). DIRECTIONAL ARROWS AS INDICATED.	CEILING OR PENDANT
	EXIT SIGN. SHADED PORTION DENOTES FACE(S). DIRECTIONAL ARROWS AS INDICATED.	4" ABOVE TOP OF DOOR FRAME TO BOTTOM OF FIXTURE

LINE-VOLTAGE LIGHTING CONTROL DEVICES

NOTES:
1. ALL WIRING SHALL BE #12 AWG IN 1/2" CONDUIT, MINIMUM.
2. PROVIDE EQUIPMENT GROUNDING CONDUCTOR FOR ALL CIRCUITS.

SYMBOL	DESCRIPTION	MOUNTING
S	20A, 120/277V SINGLE POLE SWITCH, UON. SUBSCRIPTS INDICATE THE FOLLOWING: a,b - SWITCH LEG BEING CONTROLLED	48" AFF TO CENTER, UON

RELAY-BASED LIGHTING CONTROL DEVICES

NOTES:
1. REFER TO C1/PEL601 FOR RELAY-BASED CONTROL SYSTEM RISER DIAGRAM.
2. REFER TO SHEET PEL601 FOR RELAY PANEL SCHEDULES.

SYMBOL	DESCRIPTION	MOUNTING
PLRP1	RELAY PANEL. PANEL IDENTIFICATION INDICATES THE FOLLOWING: LRP 1 1,2,3...- SEQUENCE OF PANELS LRP - LIGHTING RELAY PANEL	SURFACE AT 72" AFF TO TOP.
	DIGITAL INFRARED ONLY, OCCUPANCY SENSOR CONNECTED TO RELAY-BASED LIGHTING CONTROL SYSTEM. SUBSCRIPTS INDICATE THE FOLLOWING: a,b - SWITCHLEG(S)	CEILING.
	DIGITAL INTERIOR DAYLIGHT SENSOR CONNECTED TO RELAY-BASED LIGHTING CONTROL SYSTEM. SUBSCRIPTS INDICATE THE FOLLOWING: a,b - SWITCHLEG(S)	CEILING.
PE	EXTERIOR PHOTOCELL CONNECTED TO RELAY-BASED LIGHTING CONTROL SYSTEM.	AS INDICATED.

20A 120V RECEPTACLE BRANCH CIRCUIT HOMERUN SCHEDULE

HOMERUN LENGTH	CONDUCTOR SIZE
0-50 FEET	#12 AWG COPPER
51-100 FEET	#10 AWG COPPER
101-150 FEET	#8 AWG COPPER

NOTES:
A. THE CONDUCTOR SIZES SHOWN ARE FOR THE PHASE, NUETRAL AND GROUND CONDUCTORS.
B. FINAL CONNECTIONS TO RECEPTACLES WILL BE #12 AWG COPPER MAXIMUM. PROVIDE JUNCTION BOX ABOVE FINISHED ACCESSIBLE CEILING AS CLOSE AS POSSIBLE TO THE RECEPTACLES SERVED FOR CONDUCTOR TRANSISTIONS.

GENERAL NOTES

A. INSTALL ALL EQUIPMENT AND DEVICES AT THE HEIGHT INDICATED. REFER TO ARCHITECTURAL INTERIOR ELEVATIONS FOR SPECIAL MOUNTING HEIGHTS AND LOCATIONS OF ELECTRICAL AND COMMUNICATIONS DEVICES. MOUNTING HEIGHTS AND LOCATIONS INDICATED ON ARCHITECTURAL ELEVATIONS TAKE PRECEDENCE OVER OTHER MOUNTING HEIGHTS AND LOCATIONS.
B. LUMINAIRE TYPES INDICATED AS FOLLOWS: UPPER CASE LETTER WITH NUMERAL DENOTES FIXTURE TYPE (SEE LUMINAIRE SCHEDULE), LOWER CASE LETTER (IF SHOWN) DENOTES SWITCHING ARRANGEMENT.
C. ALL MATERIALS AND EQUIPMENT WILL BE LISTED AS COMPLYING WITH THE APPLICABLE STANDARDS OF UNDERWRITER'S LABORATORIES, INC OR OTHER APPROVED LISTING AGENCIES.
D. CONDUCTOR AMPACITIES ARE BASED ON 60° C COPPER FOR #12 AWG THROUGH #1 AWG CONDUCTORS. CONDUCTOR AMPACITIES ARE BASED ON 75° C COPPER FOR CONDUCTORS LARGER THAN #1 AWG.
E. ALL CONDUIT SIZES ARE BASED ON ELECTRICAL METALLIC TUBING (EMT) WITH TYPE THHN/THWN COPPER CONDUCTORS. ADJUST CONDUIT SIZE AS REQUIRED FOR OTHER CONDUIT MATERIALS AND CONDUCTOR TYPES.
F. THE PANELBOARD SUPPLIER SHALL BE RESPONSIBLE FOR PROVIDING OVERCURRENT PROTECTIVE DEVICES THAT ARE SELECTIVELY COORDINATED. REFER TO SPECIFICATION SECTION 26 28 01.00 10 FOR REQUIREMENTS.
G. ADJUST MOUNTING HEIGHTS FOR CEILING MOUNTED EXIT SIGNS AS REQUIRED TO PROVIDE PROPER VISIBILITY. PROVIDE PENDANTS WHERE REQUIRED TO LOWER MOUNTING HEIGHTS AS REQUIRED TO COORDINATE WITH DROP SOFFITS THAT MAY OBSCURE THE EXIT SIGNS.
H. WHEN CONTRACTOR FURNISHED EQUIPMENT INCLUDING BUT NOT LIMITED TO ARCHITECTURAL HARDWARE (I.E. WINDOW SHADES, OVERHEAD COILING DOORS AND GRILLS, POWER OPERATED DOORS, ETC...) AND HVAC EQUIPMENT SIZE OR ELECTRICAL CHARACTERISTICS PROVIDED DIFFERS FROM SIZE OR ELECTRICAL CHARACTERISTICS INDICATED OR SPECIFIED, MAKE ALL NECESSARY ADJUSTMENTS TO ELECTRICAL BOXES, CONDUIT, WIRING, DISCONNECT DEVICES, BRANCH CIRCUIT PROTECTION, AND RELATED ELECTRICAL DISTRIBUTION EQUIPMENT INCLUDING ANY ELECTRICAL REDESIGN AS REQUIRED TO ACCOMMODATE EQUIPMENT ACTUALLY PROVIDED.
I. PROVIDE SEPARATE NEUTRAL CONDUCTOR FOR EACH 277V AND 120V BRANCH CIRCUIT, UON. MULTIPLE 20A BRANCH CIRCUITS FROM THE SAME PANELBOARD MAY BE COMBINED IN A SINGLE 1/2" CONDUIT HOME RUN, MAXIMUM OF (3) CIRCUIT PER HOME RUN.
J. SEE B4/PEP501 FOR EQUIPMENT IDENTIFICATION LABEL DETAIL.
K. SEE A4/PEP501 FOR MISCELLANEOUS EQUIPMENT IDENTIFICATION LABEL DETAIL.
L. PROVIDE DISCONNECTING MEANS FOR MISCELLANEOUS MOTOR LOADS AS REQUIRED BY NFPA 70.

ABBREVIATIONS

A	AMPERES	JB	JUNCTION BOX
AFC	ABOVE FINISHED CEILING	KAIC	KILO-AMPERES INTERRUPTING CAPACITY
AFF	ABOVE FINISHED FLOOR		
AFG	ABOVE FINISHED GRADE	KV	KILO-VOLTS
AHU	AIR HANDLING UNIT	KVA	KILO-VOLTS-AMPERES
AIC	AMPERES INTERRUPTING CAPACITY	KVAR	KILO-VOLTS-AMPERES REACTIVE
ATS	AUTOMATIC TRANSFER SWITCH	KW	KILO-WATTS
AWG	AMERICAN WIRE GAUGE	KWH	KILO-WATT-HOURS
BFC	BELOW FINISHED CEILING	LAN	LOCAL AREA NETWORK
BFG	BELOW FINISHED GRADE	LED	LIGHT-EMITTING DIODE
C	CONDUIT	LTG	LIGHTING
CAB	CABINET	m	METER
CATV	CABLE TELEVISION	mm	MILLIMETER
CCTV	CLOSED CIRCUIT TELEVISION	MAX	MAXIMUM
CH	CHILLER	MCB	MAIN CIRCUIT BREAKER
CKT	CIRCUIT	MCC	MOTOR CONTROL CENTER
CL	CENTERLINE	MCP	MOTOR CIRCUIT PROTECTOR
CLG	CEILING	MFR	MANUFACTURER
CT's	CURRENT TRANSFORMERS	MIN	MINIMUM
CU	COPPER	MISC	MISCELLANEOUS
DISC	DISCONNECT(ING)	MTR	MOTOR
DWG	DRAWING(S)	MTD	MOUNTED
EA	EACH	MTG	MOUNTING
EF	EXHAUST FAN	MTS	MANUAL TRANSFER SWITCH
EMT	ELECTRICAL METALLIC TUBING	N.C.	NORMALLY CLOSED
EQUIP	EQUIPMENT	N.O.	NORMALLY OPEN
EUH	ELECTRIC UNIT HEATER	NA	NOT APPLICABLE
EWC	ELECTRIC WATER COOLER	NC	NURSE CALL
EWH	ELECTRIC WATER HEATER	NEC	NATIONAL ELECTRICAL CODE
EXH	EXHAUST	NFPA	NATIONAL FIRE PROTECTION ASSOCIATION
EXIST	EXISTING		
FA	FIRE ALARM	PNL	PANEL
FLUOR	FLUORESCENT	PVC	POLYVINYL CHLORIDE
G	GROUND	REC	RECEPTACLE
GEN	ENGINE GENERATOR SET	RGS	RIGID GALVANIZED STEEL
GFI	GROUND FAULT INTERRUPTER	SF	SUPPLY FAN
GFCI	GROUND FAULT CIRCUIT INTERRUPTER	TEL	TELEPHONE
GFGI	GOVERNMENT FURNISHED, GOVERNMENT INSTALLED	TYP	TYPICAL
		UH	UNIT HEATER
GFP	GROUND FAULT PROTECTION	UON	UNLESS OTHERWISE NOTED
GND	GROUND	V	VOLTS
HGT	HEIGHT	VA	VOLT-AMPERES
HOA	HAND-OFF-AUTOMATIC	VAV	VARIABLE AIR VOLUME UNIT
HP	HORSEPOWER	W	WATTS
HVAC	HEATING/VENTILATING / AIR CONDITIONING	WAP	WIRELESS ACCESS POINT
		WP	WEATHER PROOF
HV	HIGH VOLTAGE	XFMR	TRANSFORMER
INC	INCANDESCENT		

NOTE:
IF THIS DRAWING IS LESS THAN 34" X 22"
IT IS A REDUCED SIZE DRAWING

SYM	DESCRIPTION	DATE	APPR
1	MOD P00005	05/2023	
2	MOD P00006 AND MOD P00007	10/2025	

NAVFAC

NICHOLAS G. ZUBRZYCKI LICENSE No 64299 STATE OF FLORIDA PROFESSIONAL ENGINEER

BAMFORTH ENGINEERS & CONSULTANTS

APPROVED
FOR COMMANDER NAVFAC
ACTIVITY: Approved by J. Scott Roberts Asset Management Branch Head & Supervisory Facility Planner, PWD Beaufort, SC via email.
SATISFACTORY TO DATE 12/15/2022

DES RLW	DRW RLW	CHK KLM	
PMDM	KTB / RLH		
BRANCH MANAGER	JAS		
CHIEF ENG/ARCH	EJA		
FP ENGINEER	DSN		

NAVAL FACILITIES ENGINEERING SYSTEMS COMMAND
NAVAL FACILITIES ENGINEERING SYSTEMS COMMAND ~ MID-ATLANTIC
NORFOLK, VA

DEPARTMENT OF THE NAVY
NAVAL FACILITIES ENGINEERING SYSTEMS COMMAND ~ MID-ATLANTIC
DC CODE: MCAS BEAUFORT

BEAUFORT, SC
P-475 AIRCRAFT MAINTENANCE HANGAR - VOLUME 4 (PARKING GARAGE OPTION)

ELECTRICAL LEGEND AND ABBREVIATIONS- VOLUME 4

SCALE: As indicated
EPROJECT NO.: 1363603
CONSTR. CONTR. NO.
NAVFAC DRAWING NO: 12860393
SHEET 1172 OF 1412

PEG001

DRAWFORM REVISION: 25 AUGUST 2020

Autodesk Docs://2024 UMFAT 502 F53 Maintenance Hangar/2304L1F35 -east Hangar_Parking Facility-EL-R17/2024.rvt
11/6/2025 6:41:41 PM

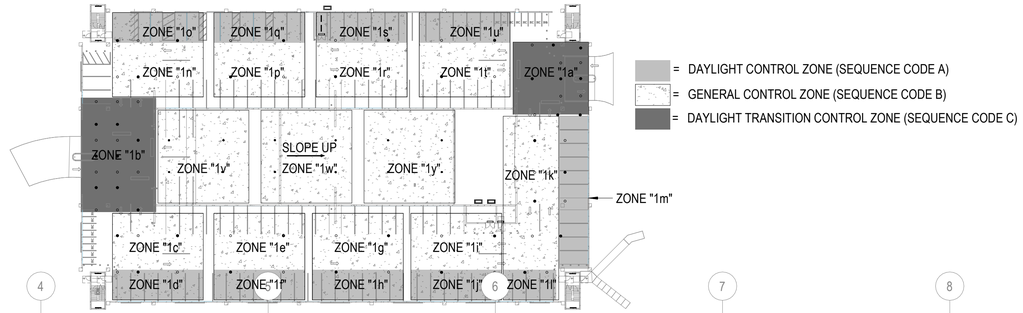

D2 LIGHTING PLAN, GROUND FLOOR, OVERALL - LIGHTING CONTROL ZONES

NOT TO SCALE

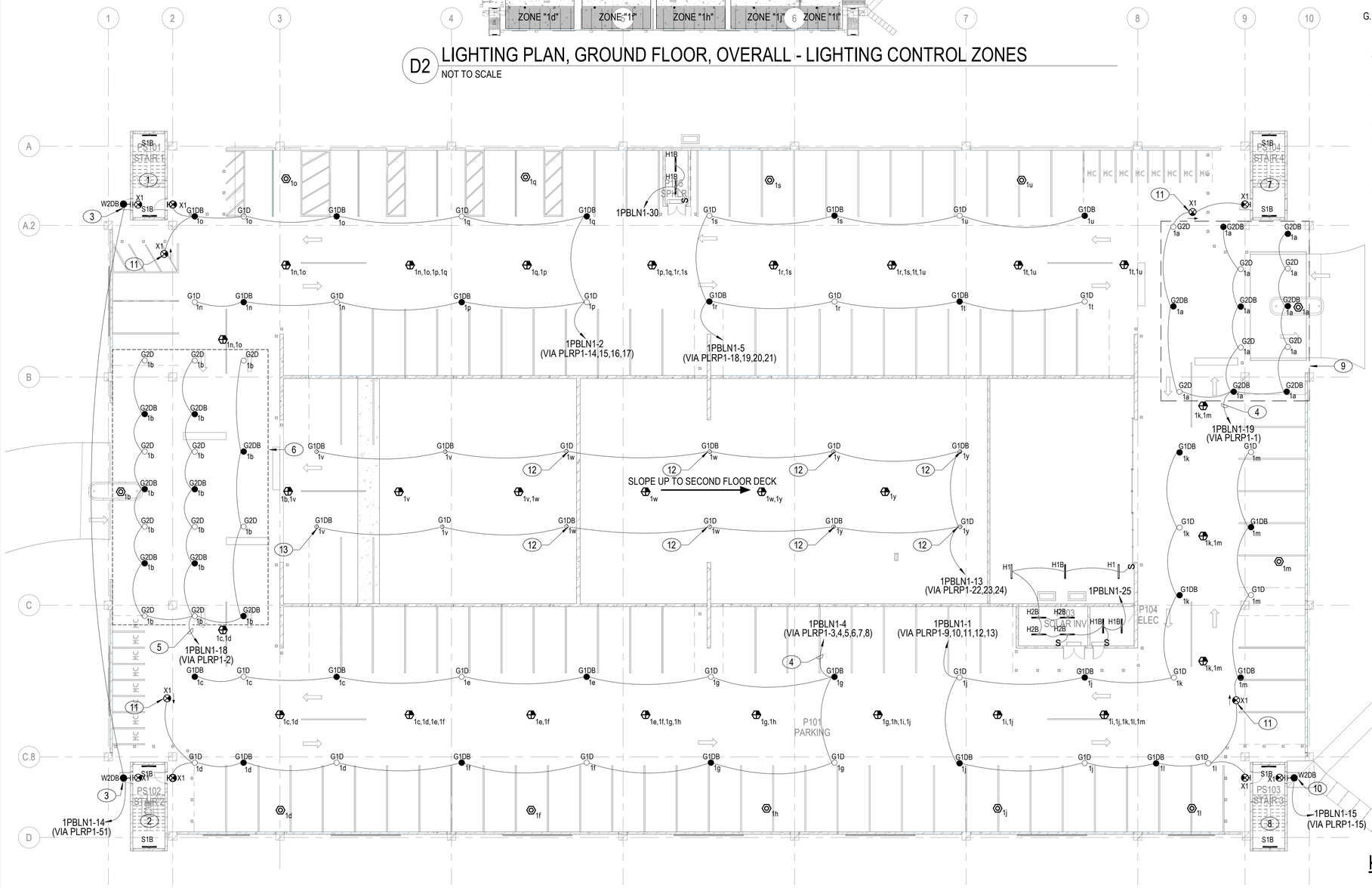

A1 LIGHTING PLAN, GROUND FLOOR, OVERALL

1/16" = 1'-0"

NOTES:

SHEET NOTES:

A. LIGHTING FIXTURES G1D AND G1DB WILL BE CONTROLLED VIA LIGHTING RELAY PANEL "PLRP1" LOCATED IN ELECTRICAL ROOM P104. REFER TO SHEET PEL601 FOR RELAY PANEL SYSTEM WIRING DIAGRAM AND SCHEDULES.
B. ADJUST MOUNTING HEIGHTS FOR CEILING MOUNTED EXIT SIGNS AS REQUIRED TO PROVIDE PROPER VISIBILITY. PROVIDE PENDANTS WHERE REQUIRED TO LOWER MOUNTING HEIGHTS AS REQUIRED TO COORDINATE WITH STRUCTURE THAT MAY OBSCURE THE EXIT SIGNS.
C. EXTERIOR LIGHTING FIXTURES WILL BE CONTROLLED VIA LIGHTING RELAY PANEL "PLRP1" LOCATED IN ELECTRICAL ROOM P104.
D. PROVIDE AN UNSWITCHED PHASE CONDUCTOR TO ALL EMERGENCY BATTERY BACK-UP LIGHTING FIXTURES AND EXIT SIGNS.
E. REFER TO SHEET PEG001 FOR LIGHTING FIXTURE SYMBOLS LEGEND. REFER TO SHEET PEL701 FOR LIGHTING FIXTURE SCHEDULE.
F. ALL VACANCY SENSORS AND DAYLIGHT SENSORS IN THE PARKING GARAGE WILL BE UL LISTED FOR EXTERIOR USE.
G. REFER TO DETAIL D2/PEL101 FOR LIGHTING CONTROL ZONES DIAGRAM.

KEY NOTES (00)

1 SEE A1/PEL301 FOR MOUNTING HEIGHTS AND CIRCUIT INFORMATION.
2 SEE A3/PEL301 FOR MOUNTING HEIGHTS AND CIRCUIT INFORMATION.
3 MOUNT FIXTURE AT 3" ABOVE TOP OF DOOR FRAME TO BOTTOM.
4 1/2"C - (2)#10 + (1)#10 GND.
5 3/4"C - (2)#8 + (1)#8 GND.
6 DAYLIGHT TRANSITION ZONE IN THIS AREA. LIGHTS IN DAYLIGHT TRANSITION ZONE ARE EXEMPT FROM DAYLIGHTING CONTROL.
7 SEE C3/PEL301 FOR MOUNTING HEIGHTS AND CIRCUIT INFORMATION.
8 SEE C1/PEL301 FOR MOUNTING HEIGHTS AND CIRCUIT INFORMATION.
9 DAYLIGHT TRANSITION ZONE IN THIS AREA. LIGHTS IN DAYLIGHT TRANSITION ZONE ARE EXEMPT FROM DAYLIGHTING CONTROL.
10 MOUNT FIXTURE AT 3" ABOVE TOP OF DOOR FRAME TO BOTTOM.
11 SURFACE MOUNT EXIT SIGN TO THE BOTTOM OF THE STRUCTURAL TEE UNIT ABOVE.
12 LIGHTS ARE MOUNTED TO THE UNDERSIDE OF THE LEVEL 2 RAMP UP TO LEVEL 3. SEE A1/PEL302 FOR LOCATION.
13 SEE A1/PEL302 FOR FIXTURE MOUNTING DETAIL. TYPICAL FOR ALL FIXTURES.

PLAN NORTH

KEYPLAN

0 10' 20' 40' 60'

1/16" = 1'-0" GRAPHIC SCALE

NOTE:
IF THIS DRAWING IS LESS THAN 34" X 22"
IT IS A REDUCED SIZE DRAWING

STM	DESCRIPTION	DATE	APPR
1	MOD P00005	05/2023	
2	MOD P00006 AND MOD P00007	10/2025	

NAVFAC

NICHOLAS G. ZUBRZYCKI LICENSE No 64299 STATE OF FLORIDA PROFESSIONAL ENGINEER

BAMFORTH ENGINEERS & ARCHITECTS

AE INFO

APPROVED
FOR COMMANDER NAVFAC 11/21/2025

ACTIVITY: Approved by J. Scott Roberts, Asset Management Branch Head & Supervisory Facility Planner, PWD Beaufort, SC via email.

SATISFACTORY TO DATE 12/15/2022

DES	RLW	DRW	RLW	CHK	KLM
PM/DM	KTB / RLH				
BRANCH MANAGER	JAS				
CHIEF ENG/ARCH	EJA				
FP ENGINEER	DSN				

DEPARTMENT OF THE NAVY
DC CORE
NAVAL FACILITIES ENGINEERING SYSTEMS COMMAND – MID-ATLANTIC
NAVAL FACILITIES ENGINEERING SYSTEMS COMMAND NORFOLK, VA
MCAS BEAUFORT
BEAUFORT, SC
P-475 AIRCRAFT MAINTENANCE HANGAR - VOLUME 4 (PARKING GARAGE OPTION)
PARKING GARAGE - LIGHTING PLAN - GROUND FLOOR

SCALE: As indicated
EPROJECT NO.: 1363603
CONSTR. CONTR. NO.
NAVFAC DRAWING NO. 12860394
SHEET 1173 OF 1412

PEL101

DRAWFORM REVISION: 25 AUGUST 2020

Autodesk Docs://2040_NAFA T 500 735 Maintenance Hangar/2040 T 35 maint Hangar_Parking Facility-EL-R17208.rvt
11/6/2025 6:41:35 PM

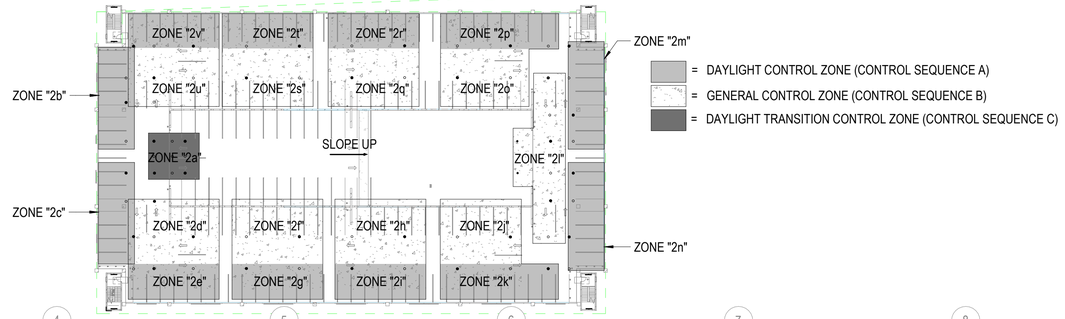

D2 LIGHTING PLAN, SECOND FLOOR, OVERALL - LIGHTING CONTROL ZONES

NOT TO SCALE

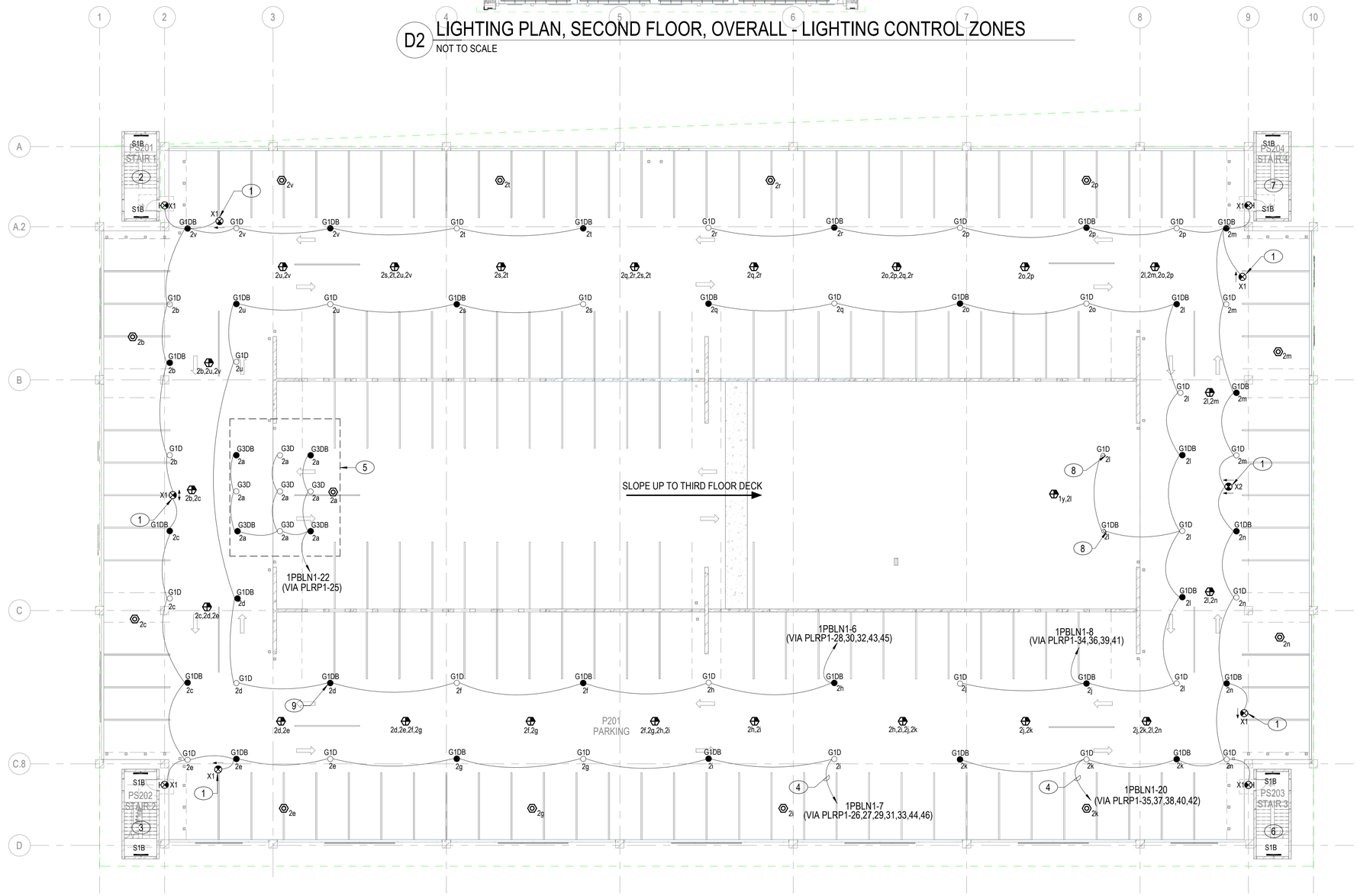

A1 LIGHTING PLAN, SECOND FLOOR, OVERALL

1/16" = 1'-0"

NOTES:

SHEET NOTES:

A. LIGHTING FIXTURES G1D AND G1DB WILL BE CONTROLLED VIA LIGHTING RELAY PANEL "PLRP1" LOCATED IN ELECTRICAL ROOM P104. REFER TO SHEET PEL601 FOR RELAY PANEL SYSTEM WIRING DIAGRAM AND SCHEDULES.
B. ADJUST MOUNTING HEIGHTS FOR CEILING MOUNTED EXIT SIGNS AS REQUIRED TO PROVIDE PROPER VISIBILITY. PROVIDE PENDANTS WHERE REQUIRED TO LOWER MOUNTING HEIGHTS AS REQUIRED TO COORDINATE WITH STRUCTURE THAT MAY OBSCURE THE EXIT SIGNS.
C. EXTERIOR LIGHTING FIXTURES WILL BE CONTROLLED VIA LIGHTING RELAY PANEL "PLRP1" LOCATED IN ELECTRICAL ROOM P104.
D. PROVIDE AN UNSWITCHED PHASE CONDUCTOR TO ALL EMERGENCY BATTERY BACK-UP LIGHTING FIXTURES AND EXIT SIGNS.
E. REFER TO SHEET PEG001 FOR LIGHTING FIXTURE SYMBOLS LEGEND. REFER TO SHEET PEL701 FOR LIGHTING FIXTURE SCHEDULE.
F. ALL VACANCY SENSORS AND DAYLIGHT SENSORS IN THE PARKING GARAGE WILL BE UL LISTED FOR EXTERIOR USE.
G. REFER TO DETAIL D2/PEL101 FOR LIGHTING CONTROL ZONES DIAGRAM.

KEY NOTES (00)

1 SURFACE MOUNT EXIT SIGN TO THE BOTTOM OF THE STRUCTURAL TEE UNIT ABOVE.
2 SEE A1/PEL301 FOR MOUNTING HEIGHTS AND CIRCUIT INFORMATION.
3 SEE A3/PEL301 FOR MOUNTING HEIGHTS AND CIRCUIT INFORMATION.
4 1/2"C - (2)#10 + (1)#10 GND.
5 DAYLIGHT TRANSITION ZONE IN THIS AREA. LIGHTS IN DAYLIGHT TRANSITION ZONE ARE EXEMPT FROM DAYLIGHTING CONTROL.
6 SEE C1/PEL301 FOR MOUNTING HEIGHTS AND CIRCUIT INFORMATION.
7 SEE C3/PEL301 FOR MOUNTING HEIGHTS AND CIRCUIT INFORMATION.
8 LIGHTS ARE MOUNTED TO THE UNDERSIDE OF THE LEVEL 2 RAMP UP TO LEVEL 3. SEE A1/PEL302 FOR LOCATION.
9 SEE B1/PEL502 FOR FIXTURE MOUNTING DETAIL. TYPICAL FOR ALL FIXTURES.

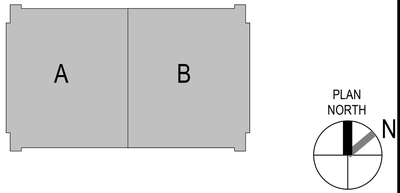

KEYPLAN

0 10' 20' 40' 60'

1/16" = 1'-0" GRAPHIC SCALE

NOTE:
IF THIS DRAWING IS LESS THAN 34" X 22"
IT IS A REDUCED SIZE DRAWING

SYM	DESCRIPTION	DATE	APPR
1	MOD P00005	05/2023	
2	MOD P00006 AND MOD P00007	10/2025	

NAVFAC

NICHOLAS G. ZUBRZYCKI LICENSE No 64299 STATE OF FLORIDA PROFESSIONAL ENGINEER

BAMFORTH ENGINEERS + SURVEYORS

AE INFO

APPROVED

FOR COMMANDER NAVFAC 11/21/2025

ACTIVITY: Approved by J. Scott Roberts, Asset Management Branch Head & Supervisory Facility Planner, PWD Beaufort, SC via email.

SATISFACTORY TO DATE 12/15/2022

DES RLW	DRW RLW	CHK KLM	
PMDM	KTB / RLH		
BRANCH MANAGER	JAS		
CHIEF ENG/ARCH	EJA		
FP ENGINEER	DSN		

NAVAL FACILITIES ENGINEERING SYSTEMS COMMAND
NORFOLK, VA

DEPARTMENT OF THE NAVY
NAVAL FACILITIES ENGINEERING SYSTEMS COMMAND – MID-ATLANTIC
DC CORE

BEAUFORT, SC
MCAS BEAUFORT
P-475 AIRCRAFT MAINTENANCE HANGAR - VOLUME 4 (PARKING GARAGE OPTION)

PARKING GARAGE - LIGHTING PLAN - SECOND FLOOR

SCALE: As indicated
EPROJECT NO.: 13636O3
CONSTR. CONTR. NO.
NAVFAC DRAWING NO. 12860395
SHEET 1174 OF 1412

PEL102

DRAWFORM REVISION: 25 AUGUST 2020

Autodesk Docs://3D042 VMFAT 100 F35 Maintenance Hangar/3D042 F35 Maintenance Hangar_Parking Facility-EL-R17D24.rvt
11/6/2025 6:42:07 PM

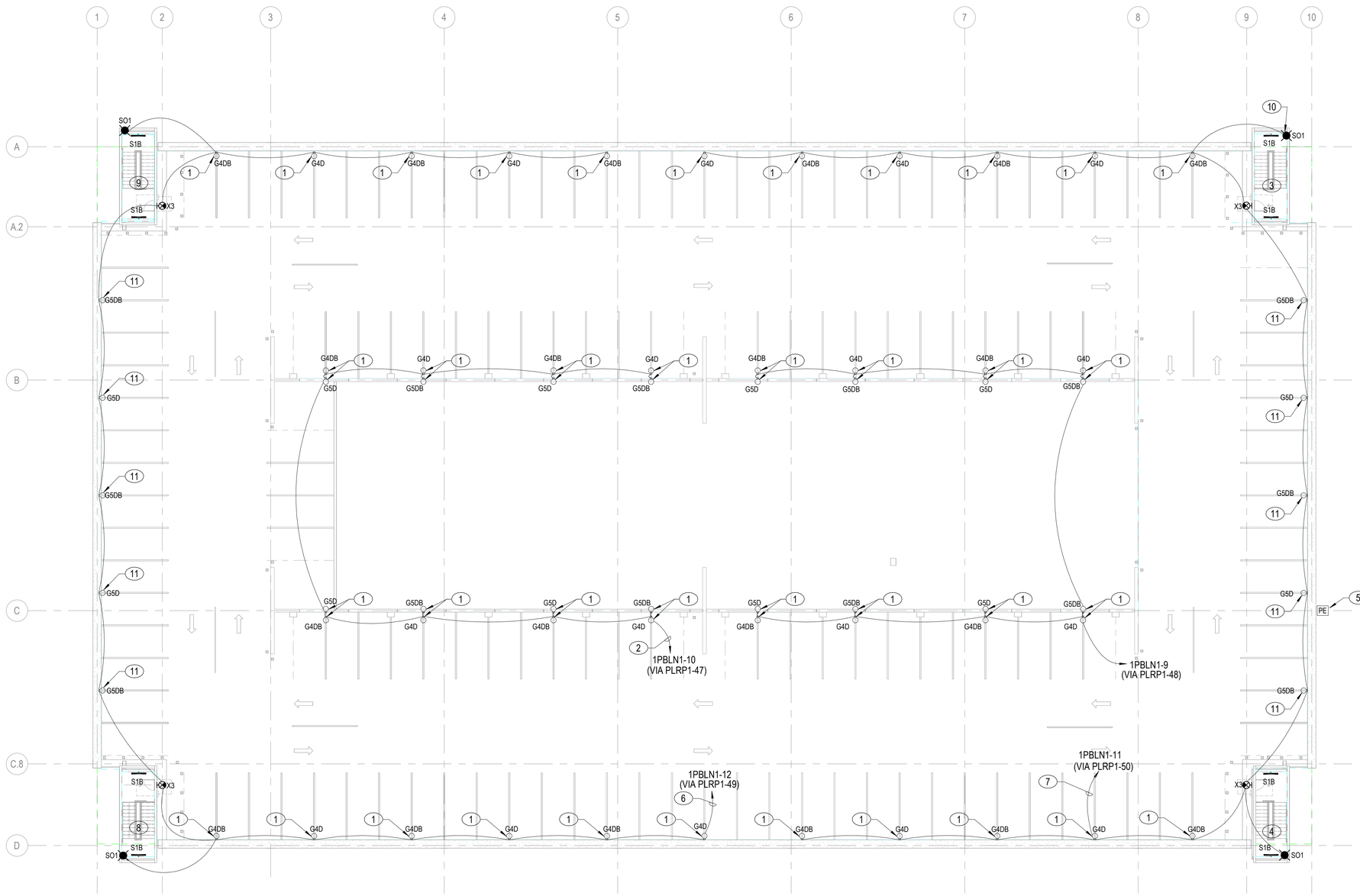

A1 LIGHTING PLAN, THIRD FLOOR, OVERALL

1/16" = 1'-0"

NOTES:

SHEET NOTES:

A. LIGHTING FIXTURES G3D, G3DB, G4D AND G4DB WILL BE CONTROLLED VIA LIGHTING RELAY PANEL "PLRP1" LOCATED IN ELECTRICAL ROOM P104. REFER TO SHEET PEL601 FOR RELAY PANEL SYSTEM WIRING DIAGRAM AND SCHEDULES.
B. PROVIDE AN UNSWITCHED PHASE CONDUCTOR TO ALL EMERGENCY BATTERY BACK-UP LIGHTING FIXTURES AND EXIT SIGNS.
C. REFER TO SHEET PEG001 FOR LIGHTING FIXTURE SYMBOLS LEGEND. REFER TO SHEET PEL701 FOR LIGHTING FIXTURE SCHEDULE.

KEY NOTES (00)

1 MOUNT FIXTURE TO THE BACK OF THE PHOTOVOLTAIC SUPPORT STRUCTURE. MOUNT AT 9'-0" ABOVE LEVEL 3 FINISHED FLOOR,
2 1/2"C - (2)#10 + (1)#10 GND.
3 SEE C3/PEL301 FOR MOUNTING HEIGHTS AND CIRCUIT INFORMATION.
4 SEE C1/PEL301 FOR MOUNTING HEIGHTS AND CIRCUIT INFORMATION.
5 BUILDING MOUNTED PHOTOCELL CONNECTED TO LIGHTING CONTROL PANEL "PLRP1" LOCATED IN ELECTRICAL ROOM P104. ORIENT NORTH. MOUNT PHOTOCELL ON EXTERIOR WALL AT 12" BELOW TOP OF WALL TO TOP OF DEVICE.
6 3/4"C - (2)#8 + (1)#8 GND.
7 1/2"C - (2)#10 + (1)#10 GND.
8 SEE A3/PEL301 FOR MOUNTING HEIGHTS AND CIRCUIT INFORMATION.
9 SEE A1/PEL301 FOR MOUNTING HEIGHTS AND CIRCUIT INFORMATION.
10 MOUNT TO A JUNCTION BOX THATS SECURELY ATTACHED TO THE METAL ROOF, TYPICAL.
11 MOUNT FIXTURE TO PRECAST CONCRETE BEAM. MOUNT AT 9'-0" ABOVE LEVEL 3 FINISHED FLOOR,

KEYPLAN

PLAN NORTH

0 10' 20' 40' 60'
1/16" = 1'-0" GRAPHIC SCALE

NOTE:
IF THIS DRAWING IS LESS THAN 34" X 22"
IT IS A REDUCED SIZE DRAWING

STM	DESCRIPTION	DATE	APPR
1	MOD P00005	05/2023	
2	MOD P00006 AND MOD P00007	10/2025	

NAVFAC

NICHOLAS G. ZUBRZYCKI
LICENSE
No 64299
STATE OF FLORIDA
PROFESSIONAL ENGINEER
SEAL

BAMFORTH ENGINEERS & CONTRACTORS
A/E INFO

APPROVED
FOR COMMANDER NAVFAC 11/21/2025
ACTIVITY Approved by J. Scott Roberts, Asset Management Branch Head & Supervisory Facility Planner, PWD Beaufort, SC via email.
SATISFACTORY TO DATE 12/15/2022

DES RLW	DRW RLW	CHK KLM	
PM/DM	KTB / RLH		
BRANCH MANAGER	JAS		
CHIEF ENG/ARCH	EJA		
FP ENGINEER	DSN		

NAVAL FACILITIES ENGINEERING SYSTEMS COMMAND
NORFOLK, VA
DEPARTMENT OF THE NAVY
NAVAL FACILITIES ENGINEERING SYSTEMS COMMAND ~ MID-ATLANTIC
DC CODE:
MCAS BEAUFORT
BEAUFORT, SC
P-475 AIRCRAFT MAINTENANCE HANGAR - VOLUME 4 (PARKING GARAGE OPTION)
PARKING GARAGE - LIGHTING PLAN - THIRD FLOOR

SCALE: 1/16" = 1'-0"
EPROJECT NO.: 1363603
CONSTR. CONTR. NO.
NAVFAC DRAWING NO.: 12860396
SHEET 1175 OF 1412

PEL103

DRAWFORM REVISION: 25 AUGUST 2020

Autodesk Docs://2042 \ MFA T 502 P25 Maintenance Hangar/2042 T 25 - maint Hangar_Parking Facility-EL-R/V T2024.rvt
11/6/2025 6:42:15 PM

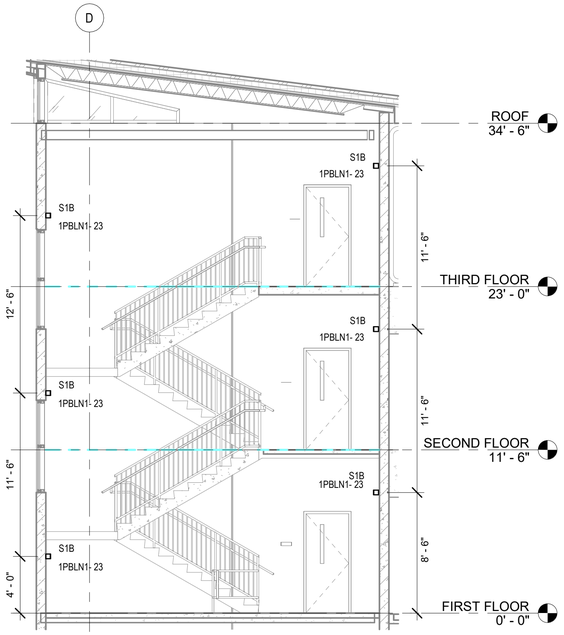

C1 STAIR 3 ELEVATION
3/16" = 1'-0"

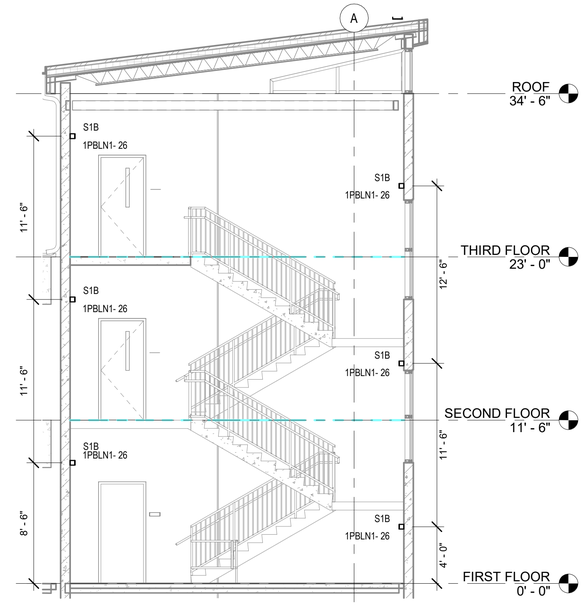

C3 STAIR 4 ELEVATION
3/16" = 1'-0"

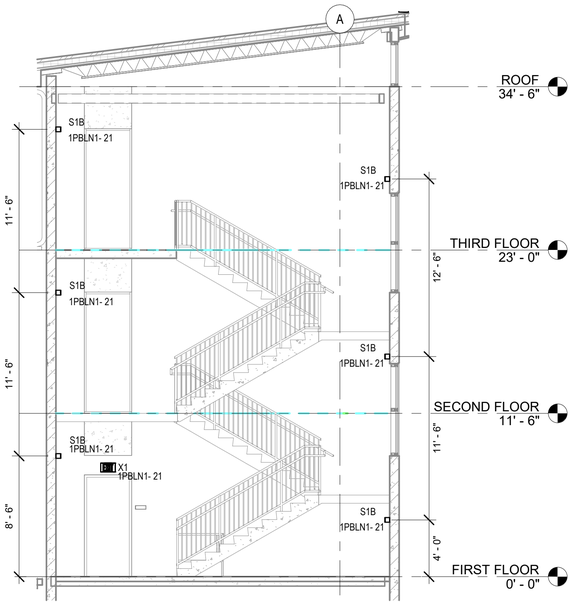

A1 STAIR 1 ELEVATION
3/16" = 1'-0"

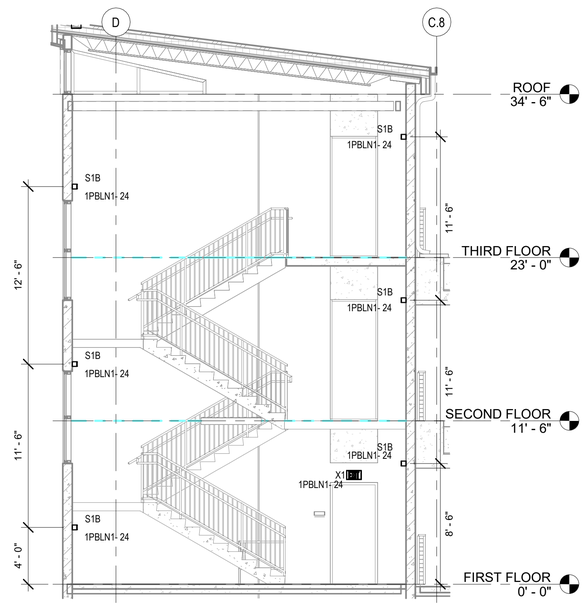

A3 STAIR 2 ELEVATION
3/16" = 1'-0"

PLAN NORTH

0 1' 5' 10' 15' 20'
3/16" = 1'-0" GRAPHIC SCALE

NOTE:
IF THIS DRAWING IS LESS THAN 34" X 22"
IT IS A REDUCED SIZE DRAWING

SYM	DESCRIPTION	DATE	APPR
1	MOD P00005	05/2023	
2	MOD P00006 AND MOD P00007	10/2025	

NAVFAC

NICHOLAS G. ZUBRZYCKI
LICENSE
No 64299
STATE OF FLORIDA
PROFESSIONAL ENGINEER

BAMFORTH
ENGINEERS • CONTRACTORS

AE INFO

APPROVED
FOR COMMANDER NAVFAC 11/25/2025

ACTIVITY
Approved by J. Scott Roberts,
Asset Management Branch Head &
Supervisory Facility Planner, PWD
Beaufort, SC via email.

SATISFACTORY TO DATE	12/15/2022
DES RLW DRW RLW CHK KLM	
PMDM	KTB / RLH
BRANCH MANAGER	JAS
CHIEF ENG/ARCH	EJA
FP ENGINEER	DSN

DEPARTMENT OF THE NAVY
NAVAL FACILITIES ENGINEERING SYSTEMS COMMAND ~ MID-ATLANTIC
NORFOLK, VA

DC CORE:
MCAS BEAUFORT
BEAUFORT, SC

P-475 AIRCRAFT MAINTENANCE HANGAR - VOLUME 4 (PARKING GARAGE OPTION)

PARKING GARAGE - STAIR SECTIONS

SCALE:	3/16" = 1'-0"
EPROJECT NO.:	1363603
CONSTR. CONTR. NO.	
NAVFAC DRAWING NO.	12860397
SHEET	1176 OF 1412

PEL301

DRAWFORM REVISION: 25 AUGUST 2020

Autodesk Docs://2042 NAFA1 520 F35 Maintenance Hangar/2042 F35 maint Hangar_Parking Facility-EL-RVT2024.rvt
11/6/2025 6:42:22 PM

NOTES:

KEY NOTES (00)

1 FIXTURE MOUNTING IS TO BOTTOM OF FIXTURE. TYPICAL.

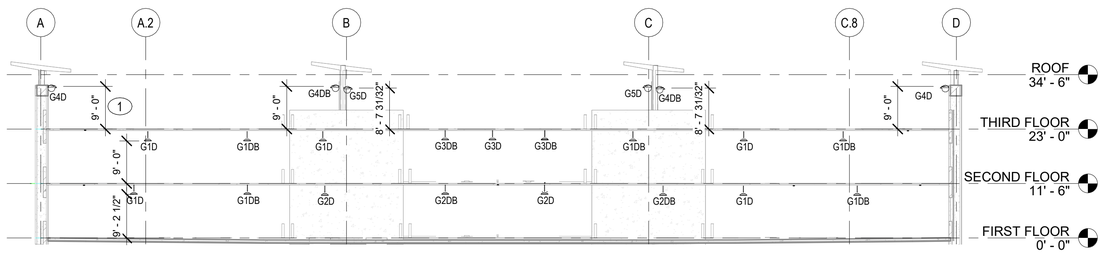

C1 PARKING GARAGE - WEST ELEVATION

1/16" = 1'-0"

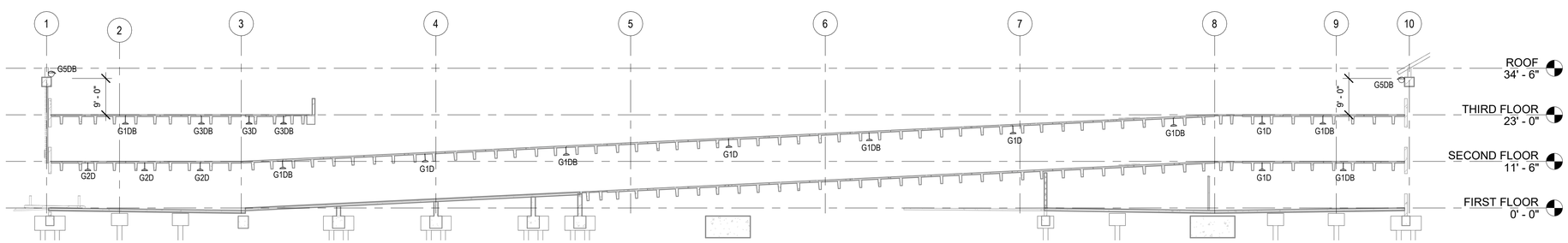

A1 PARKING GARAGE - SOUTH ELEVATION

1/16" = 1'-0"

PLAN NORTH

N

0 10' 20' 40' 60'

1/16" = 1'-0" GRAPHIC SCALE

NOTE:
IF THIS DRAWING IS LESS THAN 34" X 22"
IT IS A REDUCED SIZE DRAWING

SYM	DESCRIPTION	DATE	APPR
1	MOD P00005	05/2023	
2	MOD P00006 AND MOD P00007	10/2025	

NAVFAC

NICHOLAS G. ZUBRZYCKI
LICENSE
No 64299
STATE OF
FLORIDA
PROFESSIONAL ENGINEER

BAMFORTH
ENGINEERS - CONTRACTORS

AE INFO

APPROVED

FOR COMMANDER NAVFAC 11/21/2025

ACTIVITY
Approved by J. Scott Roberts,
Asset Management Branch Head &
Supervisory Facility Planner, PWD
Beaufort, SC via email.

SATISFACTORY TO DATE	12/15/2022
DES RLW / DRW RLW / CHK KLM	
PMDM	KTB / RLH
BRANCH MANAGER	JAS
CHIEF ENG/ARCH	EJA
FP ENGINEER	DSN

NAVAL FACILITIES ENGINEERING SYSTEMS COMMAND
NORFOLK, VA

DEPARTMENT OF THE NAVY
NAVAL FACILITIES ENGINEERING SYSTEMS COMMAND ~ MID-ATLANTIC

DC CORE:
MCAS BEAUFORT

BEAUFORT, SC

P-475 AIRCRAFT MAINTENANCE HANGAR - VOLUME 4 (PARKING GARAGE OPTION)

PARKING GARAGE - RAMP SECTION

SCALE:	1/16" = 1'-0"
EPROJECT NO.:	1363603
CONSTR. CONTR. NO.	
NAVFAC DRAWING NO.	12860398
SHEET	1177 OF 1412

PEL302

DRAWFORM REVISION: 25 AUGUST 2020

Autodesk Docs://2042 MFA1 320 F35 Maintenance Hangar/2042-F35 maint Hangar_Parking Facility-EL-R17.0224.rvt
11/6/2025 6:42:29 PM

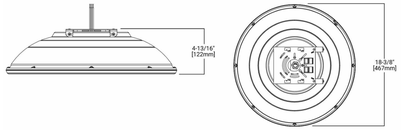

LUMINAIRE REQUIREMENTS:

1. HOUSING - DIE-CAST ALUMINUM WITH INTEGRAL, SELF-CLEANING HEAT SINK FINS, RIBS, OR EQUIVALENT PASSIVE COOLING MECHANISM. HEAT SINK SHALL BE INCORPORATED DIRECTLY INTO HOUSING TO ENSURE MAXIMUM HEAT TRANSFER AND DISSIPATION.

2. FINISH - MULTI-STAGE PRE-TREATMENT, FINISHED IN SILVER BAKED-ON POLYESTER POWDER COAT. FINISH SHALL PASS 2500 HOUR SALT SPRAY TEST PER ASTM B117.

3. POWER SUPPLY/LED DRIVER - CLASS 1 DRIVER SHALL OPERATE AT 120/277V, 50/60 HZ; OTHER VOLTAGES OPTIONAL. POWER FACTOR GREATER THAN 0.9 AND THD LESS THAN 20% AT FULL LOAD. MINIMUM EFFICACY SHALL BE 70 LM/W AT MAXIMUM 600 mA OPERATING CURRENT.

4. LED OPTICAL ASSEMBLY - NUMBER OF LED ARRAYS SHALL VARY TO ACCOMMODATE DESIRED LUMINAIRE OUTPUT. PROVIDE WITH EQUIVALENT NEMA DISTRIBUTION TYPE AS INDICATED ON FIXTURE SCHEDULE. BUG UPLIGHT RATING OF U0, WITH BACKLIGHT AND GLARE RATINGS AS DETERMINED BY LIGHTING ZONE INSTALLED. MINIMUM COLOR RENDERING INDEX (CRI) SHALL BE 70 FOR CORRELATED COLOR TEMPERATURE (CCT) OF 4000-4500 DEGREES K. MAXIMUM BUG RATING OF B3-U0-G2.

5. SURGE PROTECTION - 6 kV MINIMUM, COMPLIANT WITH ANSI C62.41.2.

6. CERTIFICATION - UL AND/OR ETL LISTED, MINIMUM IP65 RATED PER ANSI/IEC 60529, AND RoHS COMPLIANT.

7. OTHER - THE ABOVE SKETCH IS A NON-PROPRIETY GRAPHIC REPRESENTATION OF A LUMINAIRE THAT MAY MEET THE SPECIFICATION REQUIREMENTS AND IS NOT INTENDED TO INDICATE A CERTAIN MANUFACTURER'S PREFERENCE. ALL DIMENSIONS ARE NOMINAL AND VARY PER MANUFACTURER.

LED PARKING GARAGE LUMINAIRE

C1 FIXTURE DETAIL FOR G1, G2, G3, G4, G5, G6
NOT TO SCALE

LUMINAIRE REQUIREMENTS:

1. HOUSING - DIE-FORMED, COLD-ROLLED STEEL, WITH REINFORCEMENT RIBS FOR RIGIDITY AND SPECULAR ALUMINUM OR HIGHLY-REFLECTIVE PAINTED STEEL REFLECTORS. 4FT LENGTH.

2. FINISH - MULTI-STAGE PHOSPHATE BONDING TREATMENT FINISHED WITH HIGH-REFLECTANCE, WHITE POLYESTER POWDER COAT, PAINTED AFTER FABRICATION.

3. LIGHT SOURCE - SOLID STATE LEDS WITH MINIMUM 60K HOURS RATED LIFE AT L90, 4000K CCT UON, MINIMUM 80 CRI, MAXIMUM 4-STEP MCADAM ELLIPSE BINNING TOLERANCE FOR COLOR CONSISTENCY, AND MINIMUM EFFICACY OF 100 LUMENS/WATT. EMERGENCY LUMEN OUTPUT AS INDICATED IN LUMINAIRE SCHEDULE. LUMINANCE OF LESS THAN 650 cd/ft2 BETWEEN 45 AND 90 DEGREES FROM NADIR.

4. DRIVER - REPLACEABLE, INTEGRAL, HIGH-EFFICIENCY DRIVER WITH MINIMUM 0.9 PF, OPERATING VOLTAGE OF 120-277V, THERMAL MANAGEMENT, < 20% TOTAL HARMONIC DISTORTION. ON-OFF CONTROL, STEP-DIMMABLE OR FULLY DIMMABLE AS INDICATED.

5. CERTIFICATION - UL 1598, DAMP LOCATION, DLC QUALIFIED, AND ROHS COMPLIANT. COMPLIES WITH LM79, LM80 AND TM21 TESTING STANDARDS. UL 924 WHEN EQUIPPED WITH EMERGENCY BATTERY BACK-UP.

6. MOUNTING - SURFACE ON CEILING OR SUSPENDED.

7. THIS SKETCH IS A NON-PROPRIETARY GRAPHIC REPRESENTATION OF A LUMINAIRE THAT MAY MEET THE SPECIFICATION REQUIREMENTS. IT IS NOT INTENDED TO INDICATE A CERTAIN MANUFACTURER OR PREFERENCE.

LED INDUSTRIAL STRIP

C2 FIXTURE DETAIL FOR H1, H1B, H2B
NOT TO SCALE

LUMINAIRE REQUIREMENTS:

1. HOUSING - DIE-FORMED, COLD-ROLLED STEEL OR ALUMINUM, WITH REINFORCEMENT RIBS FOR RIGIDITY; END CAPS SAME MATERIAL AS HOUSING, SECURED WITH TABS, SCREWS, OR RIVETS. WHITE ENAMEL FINISH APPLIED AFTER FABRICATION. 4FT LENGTH.

2. LENS - ACRYLIC PRISMATIC OR WHITE OPAL TO PROVIDE EVEN ILLUMINATION AND TO ELIMINATE PIXILATION FROM LED LIGHT SOURCE.

3. LIGHT SOURCE - SOLID STATE LEDS WITH MINIMUM 60K HOURS RATED LIFE AT L70, 4000K CCT, MINIMUM 80 CRI, MAXIMUM 4-STEP MCADAM ELLIPSE BINNING TOLERANCE FOR COLOR CONSISTENCY, AND MINIMUM EFFICACY OF 90 LUMENS/WATT. INITIAL LUMEN OUTPUT AS INDICATED IN LUMINAIRE SCHEDULE.

4. DRIVER - REPLACEABLE, INTEGRAL, HIGH-EFFICIENCY DRIVER WITH MINIMUM 0.9 PF, OPERATING VOLTAGE OF 120-277V, THERMAL MANAGEMENT, < 20% TOTAL HARMONIC DISTORTION. ON-OFF CONTROL, STEP-DIMMABLE OR FULLY DIMMABLE AS INDICATED.

5. CERTIFICATION - UL 1598, DAMP LOCATION, DLC QUALIFIED, AND ROHS COMPLIANT. COMPLIES WITH LM79, LM80 AND TM21 TESTING STANDARDS. UL 924 WHEN EQUIPPED WITH EMERGENCY BATTERY BACK-UP.

6. MOUNTING - SURFACE.

7. THIS SKETCH IS A NON-PROPRIETARY GRAPHIC REPRESENTATION OF A LUMINAIRE THAT MAY MEET THE SPECIFICATION REQUIREMENTS. IT IS NOT INTENDED TO INDICATE A CERTAIN MANUFACTURER OR PREFERENCE.

WALL MOUNTED LED

C3 FIXTURE DETAIL FOR S1B
NOT TO SCALE

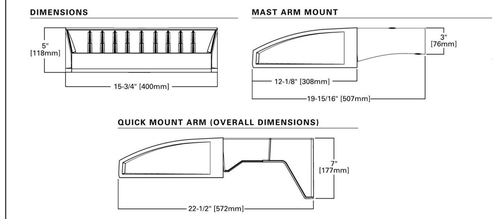

LUMINAIRE REQUIREMENTS:

1. HOUSING - DIE-CAST ALUMINUM WITH INTEGRAL PASSIVE COOLING MECHANISM. HEAT SINK SHALL BE INCORPORATED DIRECTLY INTO HOUSING OR DRIVER COMPARTMENT TO ENSURE MAXIMUM HEAT TRANSFER AND DISSIPATION.
2. FINISH - MULTI-STAGE PRE-TREATMENT, FINISHED WITH BAKED-ON POLYESTER POWDER COAT. FINISH SHALL PASS 2500 HOUR SALT SPRAY TEST PER ASTM B117. DARK BRONZE FINISH.
3. POWER SUPPLY/LED DRIVER - CLASS 1 DRIVER SHALL OPERATE AT 120/277 VOLTS, 50/60 HZ; POWER FACTOR GREATER THAN 0.9 AND THD LESS THAN 20% AT FULL LOAD. MINIMUM EFFICACY SHALL BE 60 LM/W AT MAXIMUM 600mA OPERATING CURRENT. MAXIMUM BUG RATING OF B1-U0-G2.
4. LED OPTICAL ASSEMBLY - PRECISION MOLDED ACRYLIC LENS PROVIDED FOR MULTIPLE HIGH-POWERED LEDS PRODUCING NEMA DISTRIBUTION TYPE AS NOTED ON FIXTURE SCHEDULE. BUG UPLIGHT RATING OF U0, WITH GLARE RATING AS DETERMINED BY LIGHTING ZONE INSTALLED.
5. CERTIFICATION - UL AND/OR ETL LISTED FOR WET LOCATIONS, AND RoHS COMPLIANT.
6. OTHER - THE ABOVE SKETCH IS A NON-PROPRIETY GRAPHIC REPRESENTATION OF A LUMINAIRE THAT MAY MEET THE SPECIFICATION REQUIREMENTS AND IS NOT INTENDED TO INDICATE A CERTAIN MANUFACTURER'S PREFERENCE. ALL DIMENSIONS ARE NOMINAL AND VARY PER MANUFACTURER.

LED WALL PACK

C4 FIXTURE TYPES W2DB
NOT TO SCALE

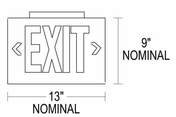

LUMINAIRE REQUIREMENTS:

1. HOUSING - HIGH-IMPACT, UV-STABILIZED, INJECTION-MOLDED THERMOPLASTIC. SINGLE OR DOUBLE-FACED AS INDICATED.

2. LETTERS/CHEVRONS - MINIMUM 6" HIGH WITH 3/4" STROKE. GREEN LETTERS AS INDICATED. PROVIDE CHEVRONS AS INDICATED EITHER LEFT, RIGHT OR BOTH DIRECTIONS AS INDICATED. CHEVRONS PUNCHED OUT THROUGH HOUSING AS REQUIRED.

3. EMERGENCY PACK - SOLID-STATE, CONSTANT-CURRENT TYPE BATTERY CHARGER WITH MAINTENANCE-FREE, NICKEL-CADMIUM BATTERY, AC-ON INDICATOR LAMP AND TEST SWITCH.

4. MOUNTING - UNIVERSAL MOUNTING KIT FOR CEILING, WALL OR END-OF-FIXTURE MOUNTING.

5. ILLUMINATION - PROVIDED GREEN HIGH-OUTPUT LEDS INSIDE OF FIXTURE HOUSING. PROVIDE POLYSTYRENE DIFFUSER IN COLOR INDICATED WITH FREQUENCY-MATCHED SILKSCREEN COATING FOR MAXIMUM LED LIGHT OUTPUT.

6. CERTIFICATION - UL LISTED AND CERTIFIED FOR DAMP LOCATIONS.

LED EXIT SIGN

A1 FIXTURE DETAIL FOR X1, X2
NOT TO SCALE

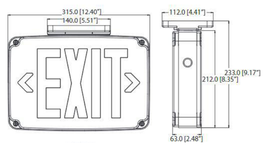

LUMINAIRE REQUIREMENTS:

1. HOUSING - HIGH-IMPACT, UV-STABILIZED, POLYCARBONATE, HIGH-IMPACT POLYCARBONATE LENS. SINGLE OR DOUBLE-FACED AS INDICATED.

2. LETTERS/CHEVRONS - MINIMUM 6" HIGH WITH 3/4" STROKE. GREEN LETTERS AS INDICATED. PROVIDE CHEVRONS AS INDICATED EITHER LEFT, RIGHT OR BOTH DIRECTIONS AS INDICATED. CHEVRONS PUNCHED OUT THROUGH HOUSING AS REQUIRED.

3. EMERGENCY PACK - SOLID-STATE, CONSTANT-CURRENT TYPE BATTERY CHARGER WITH MAINTENANCE-FREE, NICKEL-CADMIUM BATTERY, AC-ON INDICATOR LAMP AND TEST SWITCH.

4. MOUNTING - UNIVERSAL MOUNTING KIT FOR CEILING, WALL OR END-OF-FIXTURE MOUNTING.

5. ILLUMINATION - PROVIDED GREEN HIGH-OUTPUT LEDS INSIDE OF FIXTURE HOUSING. PROVIDE POLYSTYRENE DIFFUSER IN COLOR INDICATED WITH FREQUENCY-MATCHED SILKSCREEN COATING FOR MAXIMUM LED LIGHT OUTPUT.

6. CERTIFICATION - UL LISTED AND CERTIFIED FOR WET LOCATIONS.

WET LISTED LED EXIT SIGN

A2 FIXTURE DETAIL FOR X3
NOT TO SCALE

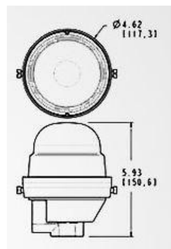

LUMINAIRE REQUIREMENTS:

1. HOUSING - WEATHER RESISTANT STAINLESS STEEL. IP66/NEMA 4X RATED.
2. LED DRIVER - DRIVER SHALL OPERATE AT 120 VOLTS, 50/60 HZ; POWER FACTOR GREATER THAN 0.9 AND THD LESS THAN 20% AT FULL LOAD.
3. OPTICAL ASSEMBLY - UV STABILIZED RED POLYCARBONATE LENS, RED LED.
4. CERTIFICATION - UL AND/OR ETL LISTED FOR WET LOCATIONS, MEET OR EXCEED FAA STANDARDS.
5. OTHER - THE ABOVE SKETCH IS A NON-PROPRIETY GRAPHIC REPRESENTATION OF A LUMINAIRE THAT MAY MEET THE SPECIFICATION REQUIREMENTS AND IS NOT INTENDED TO INDICATE A CERTAIN MANUFACTURER'S PREFERENCE. ALL DIMENSIONS ARE NOMINAL AND VARY PER MANUFACTURER.

SITE OBSTRUCTION LUMINAIRE

A3 FIXTURE DETAIL FOR S01
NOT TO SCALE

NOTE:
IF THIS DRAWING IS LESS THAN 34" X 22"
IT IS A REDUCED SIZE DRAWING

STM	DESCRIPTION	DATE	APPR
1	MOD P00005	05/2023	
2	MOD P00006 AND MOD P00007	10/2025	

NAVFAC

NICHOLAS G. ZUBRZYCKI
LICENSE
No 64299
STATE OF FLORIDA
PROFESSIONAL ENGINEER
10/2/25
SEAL

BAMFORTH
ENGINEERS - CONSULTANTS
AE INFO

APPROVED
FOR COMMANDER NAVFAC 11/21/2025

ACTIVITY
Approved by J. Scott Roberts,
Asset Management Branch Head &
Supervisory Facility Planner, PWD
Beaufort, SC via email.

SATISFACTORY TO DATE	12/15/2022
DES RLW / DRW RLW / CHK KLM	
PMDM	KTB / RLH
BRANCH MANAGER	JAS
CHIEF ENG/ARCH	EJA
FP ENGINEER	DSN

DEPARTMENT OF THE NAVY
NAVAL FACILITIES ENGINEERING SYSTEMS COMMAND
NAVAL FACILITIES ENGINEERING SYSTEMS COMMAND ~ MID-ATLANTIC
NORFOLK, VA
DC CORE:
MCAS BEAUFORT
BEAUFORT, SC
P-475 AIRCRAFT MAINTENANCE HANGAR - VOLUME 4 (PARKING GARAGE OPTION)
LIGHTING FIXTURE DETAILS

SCALE:	12" = 1'-0"
EPROJECT NO.:	1363603
CONSTR. CONTR. NO.	
NAVFAC DRAWING NO.	12860399
SHEET 1178 OF 1412	

PEL501

DRAWFORM REVISION: 25 AUGUST 2020

Autodesk Docs://2042 MFAT 520 F35 Maintenance Hangar/2042-F35 maint Hangar_Parking Facility-EL-R/T2024.rvt
11/6/2025 6:42:34 PM

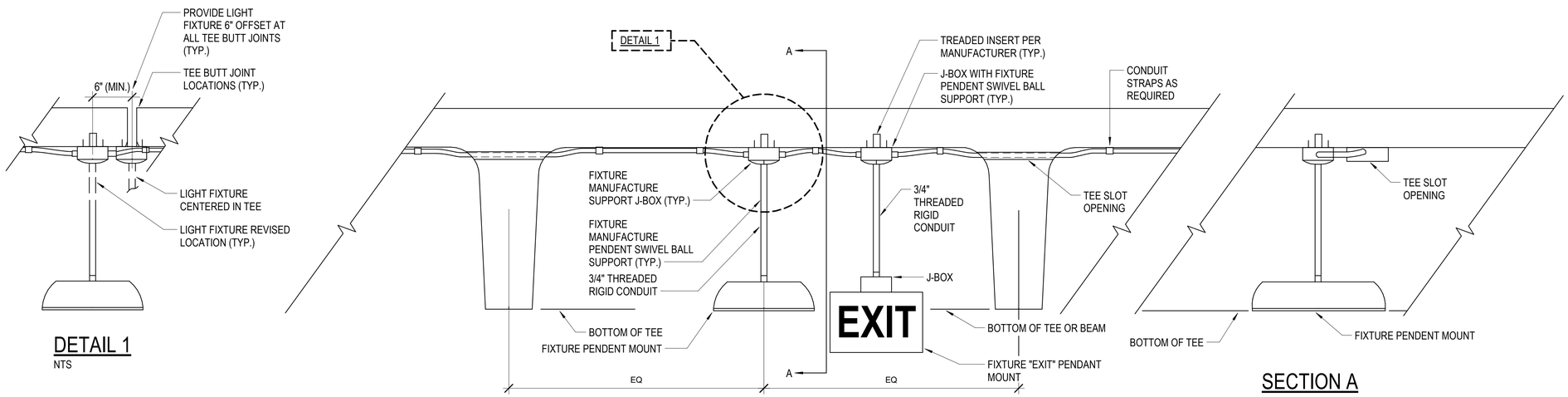

B1 PRECAST TEE FIXTURE MOUNTING ELEVATION

NTS

NOTE:
IF THIS DRAWING IS LESS THAN 34" X 22"
IT IS A REDUCED SIZE DRAWING

SYM	DESCRIPTION	DATE	APPR
1	MOD P00005	05/2023	
2	MOD P00006 AND MOD P00007	10/2025	

NAVFAC

NICHOLAS G. ZUBRZYCKI
LICENSE
No 64299
STATE OF FLORIDA
PROFESSIONAL ENGINEER

BAMFORTH
ENGINEERS CONTRACTORS

APPROVED
FOR COMMANDER NAVFAC 11/21/2025

ACTIVITY: Approved by J. Scott Roberts, Asset Management Branch Head & Supervisory Facility Planner, PWD Beaufort, SC via email.

SATISFACTORY TO DATE 12/15/2022

DES	RLW	DRW	RLW	CHK	KLM
PM/DM	KTB / RLH				
BRANCH MANAGER	JAS				
CHIEF ENG/ARCH	EJA				
FP ENGINEER	DSN				

DEPARTMENT OF THE NAVY
NAVAL FACILITIES ENGINEERING SYSTEMS COMMAND
DC CORE
NAVAL FACILITIES ENGINEERING SYSTEMS COMMAND – MID-ATLANTIC
NORFOLK, VA
MCAS BEAUFORT
BEAUFORT, SC
P-475 AIRCRAFT MAINTENANCE HANGAR - VOLUME 4 (PARKING GARAGE OPTION)
LIGHTING FIXTURE DETAILS

SCALE: NTS
EPROJECT NO.: 1363603
CONSTR. CONTR. NO.
NAVFAC DRAWING NO. 12860400
SHEET 1179 OF 1412

PEL502

DRAWFORM REVISION: 26 AUGUST 2020

Autodesk Docs://20245 NAFLT 503 735 Maintenance Hangar/20243 F36 Maintenance Hangar_Parking Facility/EL-R17205A.rvt
11/6/2025 6:42:39 PM

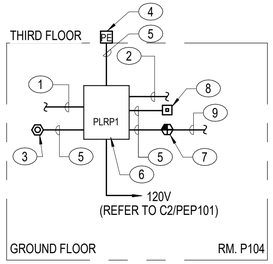

KEY NOTES: (00) (C1/PEL601)

1. LIGHTING CIRCUIT FROM LIGHTING BRANCH PANEL. SEE FLOOR PLANS FOR CIRCUITS. (TYPICAL)
2. CONTROLLED LIGHT CIRCUIT TO FIXTURES. SEE FLOOR PLANS FOR CIRCUITS. (TYPICAL)
3. TYPICAL DAYLIGHT SENSOR.
4. ROOF MOUNTED PHOTOCELL. SEE PEL103 FOR LOCATION.
5. 1/2" CONDUIT WITH LOW VOLTAGE CONTROL WIRING AS REQUIRED.
6. RELAY PANEL TO CONTROL EXTERIOR AND PARKING LIGHTING FIXTURES.
7. TYPICAL OCCUPANCY SENSOR.
8. TYPICAL CONTROL STATION.
9. 1/2" CONDUIT WITH LOW VOLTAGE WIRING AS REQUIRED TO ADDITIONAL OCCUPANCY SENSORS AS INDICATED ON PLANS.

C1 RELAY PANEL LIGHTING CONTROL SYSTEM CONNECTION DIAGRAM

NTS

RELAY PANEL CONTROL SEQUENCE CODES

SEQUENCE CODE	CONTROL FUNCTIONS				
	TIME CLOCK	OCCUPANCY SENSOR	DAYLIGHT SENSOR	DIMMING	PHOTOCELL
A	ON - ALL TIMES	AUTOMATICALLY REDUCE LIGHTING POWER TO 30% OUTPUT WHEN NO ACTIVITY IS DETECTED WITHIN A LIGHTING ZONE FOR NO MORE THAN 10 MINUTES. LIGHTING SHALL INCREASE TO 100% OUTPUT UPON DETECTION OF OCCUPANCY IN A LIGHTING ZONE	AUTOMATICALLY DIMMING LIGHTS TO 30% OUTPUT WHEN ADEQUATE DAYLIGHT IS PRESENT.	AUTOMATIC DIM IN RESPONSE TO DAYLIGHT SENSOR.	N/A
B	ON - ALL TIMES	AUTOMATICALLY REDUCE LIGHTING POWER TO 30% OUTPUT WHEN NO ACTIVITY IS DETECTED WITHIN A LIGHTING ZONE FOR NO MORE THAN 10 MINUTES. LIGHTING SHALL INCREASE TO 100% OUTPUT UPON DETECTION OF OCCUPANCY IN A LIGHTING ZONE	N/A	N/A	N/A
C	ON - ALL TIMES	N/A	AUTOMATICALLY TO 100% OUTPUT DURING HOURS OF DAYLIGHT. AUTOMATICALLY DIMS TO 10% OUTPUT DURING HOURS OF DARKNESS.	AUTOMATIC DIMMING IN RESPONSE TO DAYLIGHT SENSOR.	N/A
D	ON - 15 MINUTES BEFORE DUSK	N/A	N/A	N/A	OVERRIDE ON IF INADEQUATE DAYLIGHT.

NOTES:

1. AUTOMATIC DAY LIGHT DIMMING WILL BE SMOOTH AND CONTINUOUS WITH A DIMMING RESPONSE TIME OF 30 SECONDS TO MAINTAIN REQUIRED SPACE LIGHTING LEVEL WHILE AVOIDING RESPONSE TO TEMPORARY CONDITIONS SUCH AS PASSING CLOUDS.

PLRP1 RELAY PANEL SCHEDULE

RELAY NUMBER (SWITCH LEG)	CIRCUIT		LOAD DESCRIPTION	CONTROL SEQUENCE CODE (SWITCH LEG)
	PANEL	CIRCUIT #		
1(1a)	1PBLN1	19	LTG - FIRST FLOOR - EAST ENTRANCE	C(1a)
2(1b)	1PBLN1	18	LTG - FIRST FLOOR - WEST ENTRANCE	C(1b)
3(1c), 4(1d), 5(1e), 6(1f), 7(1g), 8(1h)	1PBLN1	4	LTG - FIRST FLOOR	A(1d,1f,1h), B(1c,1e,1g)
9(1i), 10(1j), 11(1k), 12(1l), 13(1m)	1PBLN1	1	LTG - FIRST FLOOR	A(1j,1l,1m), B(1i,1k)
14(1n), 15(1o), 16(1p), 17(1q)	1PBLN1	2	LTG - FIRST FLOOR	A(1o,1q), B(1n,1p)
18(1r), 19(1s), 20(1t), 21(1u)	1PBLN1	5	LTG - SECOND FLOOR	A(1s,1u), B(1r,1t)
22(1v), 23(1w), 24(1y)	1PBLN1	13	LTG - SECOND FLOOR - RAMP	B(1v,1y,1w)
25(2a)	1PBLN1	22	LTG - SECOND FLOOR	C(2a)
26(2b), 27(2c), 29(2e), 31(2g), 33(2i), 44(2t), 46(2v)	1PBLN1	7	LTG - SECOND FLOOR	A(2b,2c,2e,2g,2i,2t,2v)
28(2d), 30(2f), 32(2h), 43(2s), 45(2u)	1PBLN1	6	LTG - SECOND FLOOR	B(2d,2f,2h,2s,2u)
34(2j), 36(2l), 39(2o), 41(2q)	1PBLN1	8	LTG - SECOND FLOOR	B(2j,2l,2o,2q)
35(2k), 37(2m), 38(2n), 40(2p), 42(2r)	1PBLN1	20	LTG - SECOND FLOOR	A(2k,2m,2n,2p,2r)
47	1PBLN1	10	LTG - THIRD FLOOR	D
48	1PBLN1	9	LTG - THIRD FLOOR	D
49	1PBLN1	12	LTG - THIRD FLOOR	D
50	1PBLN1	11	LTG - THIRD FLOOR	D
51	1PBLN1	14	LTG - EXTERIOR	D
52	1PBLN1	16	LTG - SITE LIGHTING	D
53	1PBLN1	17	LTG - SITE LIGHTING	D
54	1PBLN1	3	LTG - SITE LIGHTING	D
55	1PBLN1	28	LTG - SITE LIGHTING	D

RELAY PANEL NOTES:

1. RELAY PANEL, INCLUDING RELAYS, WILL HAVE A SHORT CIRCUIT CURRENT RATING OF 35,000A.
2. PROVIDE 6 SPACES PER RELAY PANEL FOR FUTURE RELAYS.

NOTE:
IF THIS DRAWING IS LESS THAN 34" X 22"
IT IS A REDUCED SIZE DRAWING

STM	DESCRIPTION	DATE	APPR
1	MOD P00005	05/2023	
2	MOD P00006 AND MOD P00007	10/2025	

NAVFAC

NICHOLAS G. ZUBRZYCKI LICENSE No 64299 STATE OF FLORIDA PROFESSIONAL ENGINEER

BAMFORTH ENGINEERS & CONTRACTORS

AE INFO

APPROVED

FOR COMMANDER NAVFAC 11/12/2025

ACTIVITY: Approved by J. Scott Roberts, Asset Management Branch Head & Supervisory Facility Planner, PWD Beaufort, SC via email.

SATISFACTORY TO DATE 12/15/2022

DES RLW	DRW RLW	CHK KLM	
PMDM	KTB / RLH		
BRANCH MANAGER	JAS		
CHIEF ENG/ARCH	EJA		
FP ENGINEER	DSN		

DEPARTMENT OF THE NAVY
NAVAL FACILITIES ENGINEERING SYSTEMS COMMAND ~ MID-ATLANTIC
NORFOLK, VA
DC CORE:
MCAS BEAUFORT
BEAUFORT, SC

P-475 AIRCRAFT MAINTENANCE HANGAR - VOLUME 4 (PARKING GARAGE OPTION)

LIGHTING CONTROL DIAGRAMS AND SCHEDULES

SCALE: As indicated
EPROJECT NO.: 1363603
CONSTR. CONTR. NO.
NAVFAC DRAWING NO. 12860401
SHEET 1180 OF 1412

PEL601

DRAWFORM REVISION: 25 AUGUST 2020

Autodesk Docs://2042 NAF A1 320 F35 Maintenance Hangar/2042-F35 maint Hangar_Parking Facility-EL-R17/2024.rvt
11/6/2025 6:42:46 PM

LIGHTING FIXTURES SCHEDULE

FIXTURE TYPE	FIXTURE DESCRIPTION	VOLTAGE	LAMP	LUMEN	CCT	CRI	MOUNTING	NOTES	LOAD	DETAIL REFERENCE
G1D	18" DIAMETER X 4-13/16" DEEP PENDANT PARKING GARAGE FIXTURE WITH DIE-CAST ALUMINUM HOUSING, WIDE OPTICAL DISTRIBUTION, 2.5MIL BRONZE POWDER COAT FINISH, STANDARD 0-10V DIMMING, AND IP66 RATING.	120V	LED	3875	4000K	70	SUSPENDED	SEE PEL302 AND PEL502 FOR MOUNTING HEIGHTS AND DETAILS.	28 VA	C1/PEL501
G1DB	18" DIAMETER X 4-13/16" DEEP PENDANT PARKING GARAGE FIXTURE WITH DIE-CAST ALUMINUM HOUSING, WIDE OPTICAL DISTRIBUTION, 2.5MIL BRONZE POWDER COAT FINISH, STANDARD 0-10V DIMMING, AND IP66 RATING. PROVIDE WITH EMERGENCY BATTERY.	120V	LED	3875	4000K	70	SUSPENDED	SEE PEL302 AND PEL502 FOR MOUNTING HEIGHTS AND DETAILS.. PROVIDE INTEGRAL BATTERY WITH 90 MINUTE RUN TIME.	28 VA	C1/PEL501
G2D	18" DIAMETER X 4-13/16" DEEP PENDANT PARKING GARAGE FIXTURE WITH DIE-CAST ALUMINUM HOUSING, WIDE OPTICAL DISTRIBUTION, 2.5MIL BRONZE POWDER COAT FINISH, STANDARD 0-10V DIMMING, AND IP66 RATING.	120V	LED	12500	4000K	70	SUSPENDED	SEE PEL302 AND PEL502 FOR MOUNTING HEIGHTS AND DETAILS.	105 VA	C1/PEL501
G2DB	18" DIAMETER X 4-13/16" DEEP PENDANT PARKING GARAGE FIXTURE WITH DIE-CAST ALUMINUM HOUSING, WIDE OPTICAL DISTRIBUTION, 2.5MIL BRONZE POWDER COAT FINISH, STANDARD 0-10V DIMMING, AND IP66 RATING. PROVIDE WITH EMERGENCY BATTERY.	120V	LED	12500	4000K	70	SUSPENDED	SEE PEL302 AND PEL502 FOR MOUNTING HEIGHTS AND DETAILS. PROVIDE INTEGRAL BATTERY WITH 90 MINUTE RUN TIME.	105 VA	C1/PEL501
G3D	18" DIAMETER X 4-13/16" DEEP PENDANT PARKING GARAGE FIXTURE WITH DIE-CAST ALUMINUM HOUSING, WIDE OPTICAL DISTRIBUTION, 2.5MIL BRONZE POWDER COAT FINISH, STANDARD 0-10V DIMMING, AND IP66 RATING.	120V	LED	9500	4000K	70	SUSPENDED	SEE PEL302 AND PEL502 FOR MOUNTING HEIGHTS AND DETAILS.	75 VA	C1/PEL501
G3DB	18" DIAMETER X 4-13/16" DEEP PENDANT PARKING GARAGE FIXTURE WITH DIE-CAST ALUMINUM HOUSING, WIDE OPTICAL DISTRIBUTION, 2.5MIL BRONZE POWDER COAT FINISH, STANDARD 0-10V DIMMING, AND IP66 RATING. PROVIDE WITH EMERGENCY BATTERY.	120V	LED	9500	4000K	70	SUSPENDED	SEE PEL302 AND PEL502 FOR MOUNTING HEIGHTS AND DETAILS. PROVIDE INTEGRAL BATTERY WITH 90 MINUTE RUN TIME.	75 VA	C1/PEL501
G4D	18" DIAMETER X 4-13/16" DEEP PENDANT PARKING GARAGE FIXTURE WITH DIE-CAST ALUMINUM HOUSING, DRIVE LANE ASYMMETRIC OPTICAL DISTRIBUTION, 2.5MIL SILVER POWDER COAT FINISH, AND IP66 RATING. PROVIDE WITH INTEGRAL DIMMING OCCUPANCY SENSOR. INTEGRAL CONTROLS SHALL BE PROGRAMMED SUCH THAT LIGHT OUTPUT IS AT 50% FULL BRIGHTNESS FROM DUSK TO DAWN, UNLESS MOTION IS DETEDCTED, WHICH SHALL TRIGGER THE FIXTURE TO SWITCH TO 100% FULL BRIGHTNESS WITH A 10 MINUTE VACANCY TIMEOUT.	120V	LED	3300	4000K	70	WALL	SEE PEL302 AND PEL502 FOR MOUNTING HEIGHTS AND DETAILS. AIM ASYMMETRIC DISTRIBUTION TOWARDS CENTER OF DRIVE LANE.	29 VA	C1/PEL501
G4DB	18" DIAMETER X 4-13/16" DEEP PENDANT PARKING GARAGE FIXTURE WITH DIE-CAST ALUMINUM HOUSING, DRIVE LANE ASYMMETRIC OPTICAL DISTRIBUTION, 2.5MIL SILVER POWDER COAT FINISH, AND IP66 RATING. PROVIDE WITH INTEGRAL DIMMING OCCUPANCY SENSOR AND EMERGENCY BATTERY. INTEGRAL CONTROLS SHALL BE PROGRAMMED SUCH THAT LIGHT OUTPUT IS AT 50% FULL BRIGHTNESS FROM DUSK TO DAWN, UNLESS MOTION IS DETEDCTED, WHICH SHALL TRIGGER THE FIXTURE TO SWITCH TO 100% FULL BRIGHTNESS WITH A 10 MINUTE VACANCY TIMEOUT.	120V	LED	3300	4000K	70	WALL	SEE PEL302 AND PEL502 FOR MOUNTING HEIGHTS AND DETAILS. PROVIDE INTEGRAL BATTERY WITH 90 MINUTE RUN TIME. AIM ASYMMETRIC DISTRIBUTION TOWARDS CENTER OF DRIVE LANE.	29 VA	C1/PEL501
G5D	18" DIAMETER X 4-13/16" DEEP PENDANT PARKING GARAGE FIXTURE WITH DIE-CAST ALUMINUM HOUSING, DRIVE LANE ASYMMETRIC OPTICAL DISTRIBUTION, 2.5MIL SILVER POWDER COAT FINISH, AND IP66 RATING. PROVIDE WITH INTEGRAL DIMMING OCCUPANCY SENSOR. INTEGRAL CONTROLS SHALL BE PROGRAMMED SUCH THAT LIGHT OUTPUT IS AT 50% FULL BRIGHTNESS FROM DUSK TO DAWN, UNLESS MOTION IS DETEDCTED, WHICH SHALL TRIGGER THE FIXTURE TO SWITCH TO 100% FULL BRIGHTNESS WITH A 10 MINUTE VACANCY TIMEOUT.	120V	LED	4475	4000K	70	WALL	SEE PEL302 AND PEL502 FOR MOUNTING HEIGHTS AND DETAILS. AIM ASYMMETRIC DISTRIBUTION TOWARDS CENTER OF DRIVE LANE.	41 VA	C1/PEL501
G5DB	18" DIAMETER X 4-13/16" DEEP PENDANT PARKING GARAGE FIXTURE WITH DIE-CAST ALUMINUM HOUSING, DRIVE LANE ASYMMETRIC OPTICAL DISTRIBUTION, 2.5MIL SILVER POWDER COAT FINISH, AND IP66 RATING. PROVIDE WITH INTEGRAL DIMMING OCCUPANCY SENSOR AND EMERGENCY BATTERY. INTEGRAL CONTROLS SHALL BE PROGRAMMED SUCH THAT LIGHT OUTPUT IS AT 50% FULL BRIGHTNESS FROM DUSK TO DAWN, UNLESS MOTION IS DETEDCTED, WHICH SHALL TRIGGER THE FIXTURE TO SWITCH TO 100% FULL BRIGHTNESS WITH A 10 MINUTE VACANCY TIMEOUT.	120V	LED	4475	4000K	70	WALL	SEE PEL302 AND PEL502 FOR MOUNTING HEIGHTS AND DETAILS. PROVIDE INTEGRAL BATTERY WITH 90 MINUTE RUN TIME. AIM ASYMMETRIC DISTRIBUTION TOWARDS CENTER OF DRIVE LANE.	41 VA	C1/PEL501
H1	4' LENSED LED STRIP FIXTURE, 22-GAUGE DIE-FORMED STEEL WITH WHITE POLYESTER POWDER COAT FINISH, 0.125" THICK FROSTED ACRYLIC LENS.	120V	LED	3138	4000K	80	SUSPENDED	SUSPEND AT 9'-0" AFF TO BOTTOM UON. FIXTURE SHALL BE UL LISTED AS A RACEWAY SUITABLE FOR THROUGH WIRING.	22 VA	C2/PEL501
H1B	4' LENSED LED STRIP FIXTURE, 22-GAUGE DIE-FORMED STEEL WITH WHITE POLYESTER POWDER COAT FINISH, 0.125" THICK FROSTED ACRYLIC LENS. PROVIDE WITH EMERGENCY BATTERY.	120V	LED	3138	4000K	80	SUSPENDED	SUSPEND AT 9'-0" AFF TO BOTTOM UON. FIXTURE SHALL BE UL LISTED AS A RACEWAY SUITABLE FOR THROUGH WIRING. PROVIDE INTEGRAL BATTERY WITH 90 MINUTE RUN TIME.	22 VA	C2/PEL501
H2B	4' LENSED LED STRIP FIXTURE, 22-GAUGE DIE-FORMED STEEL WITH WHITE POLYESTER POWDER COAT FINISH, 0.125" THICK FROSTED ACRYLIC LENS. PROVIDE WITH EMERGENCY BATTERY.	120V	LED	5858	4000K	80	SUSPENDED	SUSPEND AT 9'-0" AFF TO BOTTOM UON. FIXTURE SHALL BE UL LISTED AS A RACEWAY SUITABLE FOR THROUGH WIRING. PROVIDE INTEGRAL BATTERY WITH 90 MINUTE RUN TIME.	22 VA	C2/PEL501
S1B	4'L LED WALL DIRECT/INDIRECT FIXTURE WITH ALUMINUM ENCLOSURE, WHITE FINISH, AND INTEGRAL OCCUPANCY SENSOR TO DIM TO 50% WHEN VACANT. PROVIDE EMERGENCY BATTERY.	120V	LED	6000	4000K	80	SURFACE	SEE PEL301 FOR MOUNTING HEIGHTS. PROVIDE INTEGRAL BATTERY WITH 90 MINUTE RUN TIME AT 25% BRIGHTNESS MINIMUM. UL LISTED FOR DAMP LOCATIONS.	42 VA	C3/PEL501
SO1	4.6" DIAMETER ROUND RED LED OBSTRUCTION LUMINAIRE WITH UV STABILIZED POLYCARBONATE LENS, SHOCK AND VIBRATION RESISTANT, STEADY OPERATION, WEATHER AND CORROSION RESISTANT LAMP ASSEMBLY AND HOUSING, AND SELF-CONTAINED WIRING COMPARTMENT.	120V	LED				SURFACE, ON METAL ROOF	OBSTRUCTION LIGHT SHALL MEET FAA REQUIREMENTS AND BE IP66/NEMA 4X RATED. PROVIDE WITH PHOTOCELL AND BACKUP BATTERY FOR 12-HOUR OPERATION.	3 VA	A3/PEL501
W2DB	EXTERIOR WALL MOUNTED FIXTURE WITH DIE CAST ALUMINUM ENCLOSURE, IP66 RATED HOUSING, 2.5MIL THICKNESS DARK BRONZE POWDER COAT FINISH, AND TYPE IV WIDE DISTRIBUTION. PROVIDE WITH INTEGRAL DIMMING OCCUPANCY SENSOR AND EMERGENCY BATTERY. INTEGRAL CONTROLS SHALL BE PROGRAMMED SUCH THAT LIGHT OUTPUT IS AT 50% FULL BRIGHTNESS FROM DUSK TO DAWN, UNLESS MOTION IS DETEDCTED, WHICH SHALL TRIGGER THE FIXTURE TO SWITCH TO 100% FULL BRIGHTNESS WITH A 10 MINUTE VACANCY TIMEOUT.	120V	LED	6458	4000K	80	WALL	MOUNTED AT 15'-0" AFG TO BOTTOM UON.	59 VA	C4/PEL501
X1	SINGLE FACE LED EXIT SIGN WITH THERMOPLASTIC HOUSING, INTEGRAL NICKEL CADMIUM BATTERY, GREEN LETTERS, AND SELF-DIAGNOSTICS.	120V	LED	N/A	N/A	N/A	UNIVERSAL	WHERE WALL-MOUNTED ABOVE DOOR, MOUNT AT 1" ABOVE DOOR FRAME TO BOTTOM OF SIGN. UL LISTED FOR DAMP LOCATIONS.	2 VA	A1/PEL501
X2	DOUBLE FACE LED EXIT SIGN WITH THERMOPLASTIC HOUSING, INTEGRAL NICKEL CADMIUM BATTERY, GREEN LETTERS, AND SELF-DIAGNOSTICS.	120V	LED	N/A	N/A	N/A	UNIVERSAL	WHERE WALL-MOUNTED ABOVE DOOR, MOUNT AT 1" ABOVE DOOR FRAME TO BOTTOM OF SIGN. UL LISTED FOR DAMP LOCATIONS.	2 VA	A1/PEL501
X3	SINGLE FACE LED EXIT SIGN WITH UV STABILIZED POLYCARBONATE LENS AND HOUSING, INTEGRAL NICKEL CADMIUM BATTERY, GREEN LETTERS, AND SELF-DIAGNOSTICS.	120V	LED	N/A	N/A	N/A	UNIVERSAL	WHERE WALL-MOUNTED ABOVE DOOR, MOUNT AT 1" ABOVE DOOR FRAME TO BOTTOM OF SIGN. UL LISTED FOR WET LOCATIONS.	2 VA	A2/PEL501

NOTES:

SHEET NOTES:

A. LIGHTING FIXTURES SHALL NOT BE USED AS A RACEWAY UNLESS UL LISTED AS SUCH.
B. DIMMING DRIVERS SHALL BE COMPATIBLE WITH ASSOCIATED LIGHTING CONTROL SWITCH OR RELAY AND SHALL ALLOW FOR 10% TO 100% DIMMING RANGE OR STEP DIMMING AS REQUIRED.

NOTE:
IF THIS DRAWING IS LESS THAN 34" X 22"
IT IS A REDUCED SIZE DRAWING

STM	DESCRIPTION	DATE	APPR
1	MOD P00005	05/2023	
2	MOD P00006 AND MOD P00007	10/2025	

NAVFAC

NICHOLAS G. ZUBRZYCKI LICENSE No 64299 STATE OF FLORIDA PROFESSIONAL ENGINEER

SEAL

BAMFORTH ENGINEERS ARCHITECTS

A/E INFO

APPROVED

FOR COMMANDER NAVFAC 11/12/2025

ACTIVITY
Approved by J. Scott Roberts,
Asset Management Branch Head &
Supervisory Facility Planner, PWD
Beaufort, SC via email.

SATISFACTORY TO DATE 12/15/2022

DES RLW DRW RLW CHK KLM

PM/DM KTB / RLH

BRANCH MANAGER JAS

CHIEF ENG/ARCH EJA

FP ENGINEER DSN

DEPARTMENT OF THE NAVY
NAVAL FACILITIES ENGINEERING SYSTEMS COMMAND ~ MID-ATLANTIC
NORFOLK, VA

DC CORE:
MCAS BEAUFORT

BEAUFORT, SC

P-475 AIRCRAFT MAINTENANCE HANGAR - VOLUME 4 (PARKING GARAGE OPTION)

LIGHTING FIXTURE SCHEDULE

SCALE:

EPROJECT NO.: 1363603

CONSTR. CONTR. NO.

NAVFAC DRAWING NO.
12860402

SHEET 1181 OF 1412

PEL701

DRAWFORM REVISION: 25 AUGUST 2020

Autodesk Docs://2042 MFA1 320 F35 Maintenance Hangar/2042 F35 maint Hangar_Parking Facility-EL-R/T2024.rvt
11/6/2025 6:42:33 PM

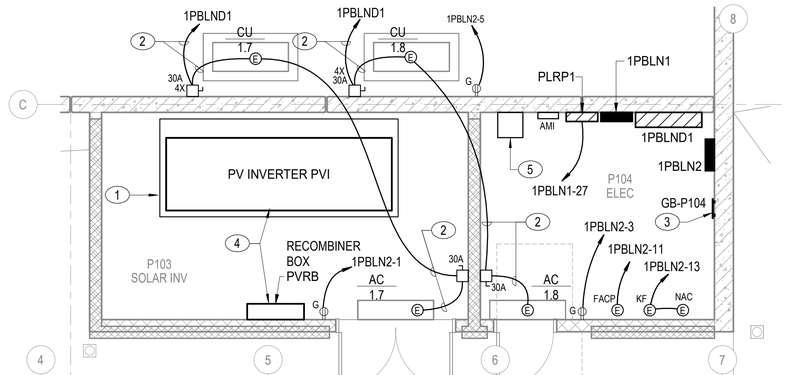

C2 ENLARGED PLAN - SOLAR INV P103 & ELEC P104

1/4" = 1'-0"

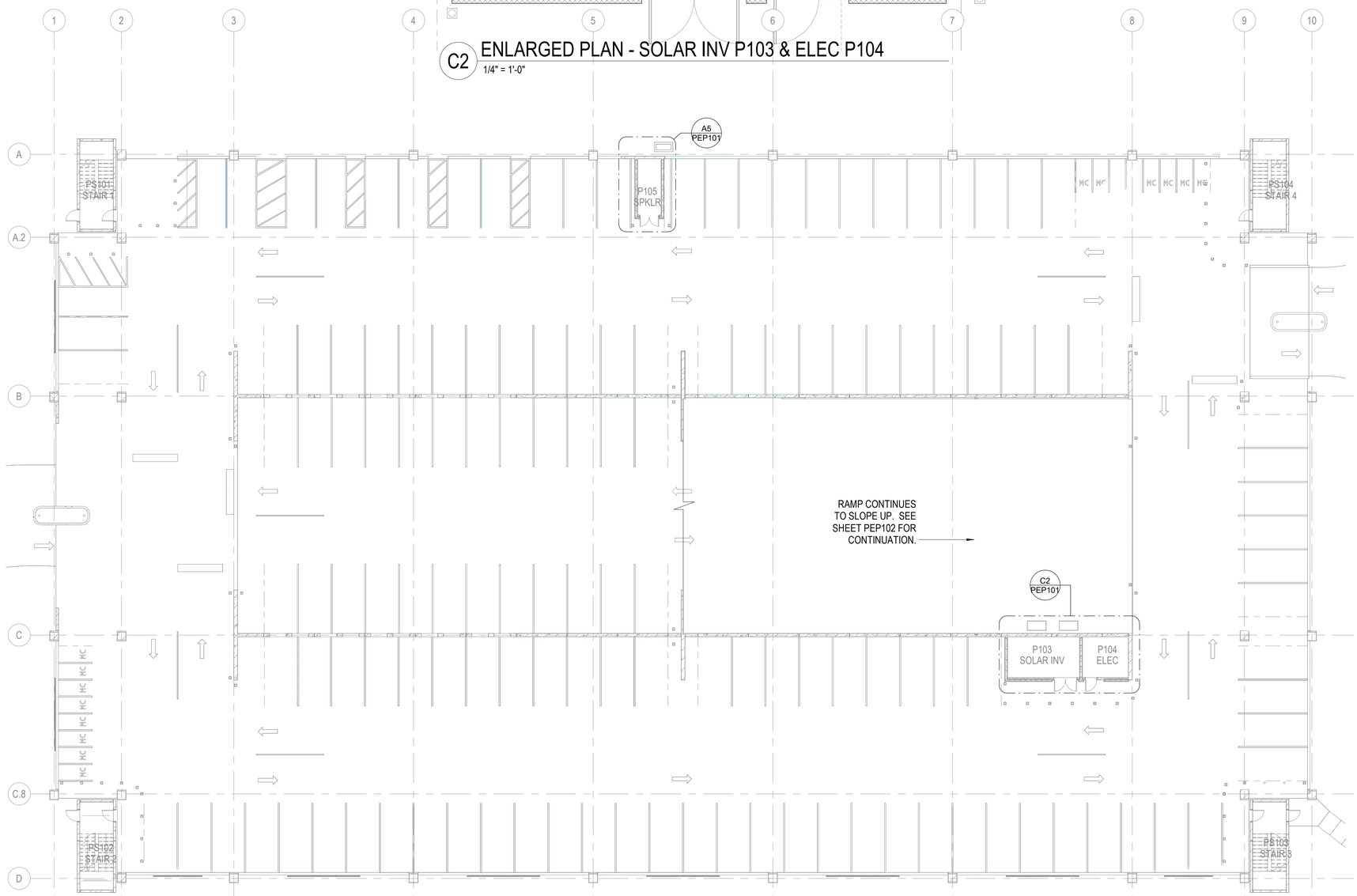

A1 POWER PLAN, GROUND FLOOR, SECTOR A

1/16" = 1'-0"

NOTES:

KEY NOTES (00)

1. 4" HIGH CONCRETE HOUSEKEEPING PAD. EXTEND 4" BEYOND EQUIPMENT ON ALL EXPOSED EDGES AND PROVIDE 1/2" BEVEL. APPLY TWO COATS OF SAFETY YELLOW PAINT ON ALL EXPOSED SURFACES.
2. SEE A1/PEP601 FOR CONDUIT AND WIRE SIZE.
3. MOUNT GROUND BUS AT 18" AFF TO TOP. SEE C1/PEP501 FOR GROUND BUS DETAIL. SEE A1/PEP602 FOR CONNECTION REQUIREMENTS.
4. PROVIDE ONLY IF PARKING GARAGE PV PANEL OPTION IS AWARDED.
5. WALL MOUNTED TELECOMMUNICATIONS RACK FOR EPMS FIBER OPTIC PATCH PANEL AND FIBER OPTIC SWITCH.

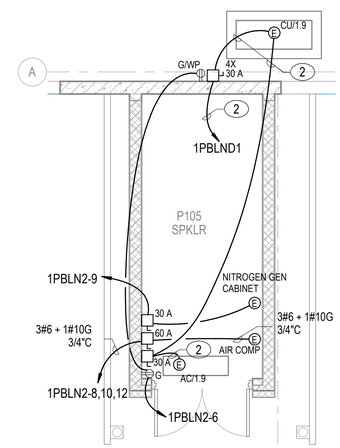

A5 ENLARGED PLAN - SPKLR P105

1/4" = 1'-0"

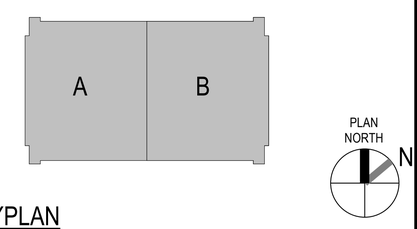

KEYPLAN

0 10' 20' 40' 60'

1/16" = 1'-0" GRAPHIC SCALE

NOTE:
IF THIS DRAWING IS LESS THAN 34" X 22"
IT IS A REDUCED SIZE DRAWING

STM	DESCRIPTION	DATE	APPR
1	MOD P00005	05/2023	
2	MOD P00006 AND MOD P00007	10/2025	

NAVFAC

NICHOLAS G. ZUBRZYCKI LICENSE No 64299 STATE OF FLORIDA PROFESSIONAL ENGINEER

BAMFORTH ENGINEERS + SURVEYORS

AE INFO

APPROVED

FOR COMMANDER NAVFAC

ACTIVITY: Approved by J. Scott Roberts, Asset Management Branch Head & Supervisory Facility Planner, PWD Beaufort, SC via email.

SATISFACTORY TO DATE	12/15/2022
DES RLW / DRW RLW / CHK KLM	
PM/DM	KTB / RLH
BRANCH MANAGER	JAS
CHIEF ENG/ARCH	EJA
FP ENGINEER	DSN

DEPARTMENT OF THE NAVY
NAVAL FACILITIES ENGINEERING SYSTEMS COMMAND
DC CODE: MCAS BEAUFORT

NAVAL FACILITIES ENGINEERING SYSTEMS COMMAND ~ MID-ATLANTIC
NORFOLK, VA

BEAUFORT, SC

P-475 AIRCRAFT MAINTENANCE HANGAR - VOLUME 4 (PARKING GARAGE OPTION)

PARKING GARAGE - POWER PLAN - GROUND FLOOR

SCALE:	As indicated
EPROJECT NO.:	1363603
CONSTR. CONTR. NO.	
NAVFAC DRAWING NO.	12860403
SHEET	1182 OF 1412

PEP101

DRAWFORM REVISION: 25 AUGUST 2020

Autodesk Docs://2024 UMFAT 502 F33 Maintenance Hangar/2304211F35 -asset Hangar_Parking Facility-EL-RVT/2024.rvt
11/6/2025 6:43:02 PM

NOTES:

SHEET NOTES:

A. THIS SHEET IS FOR REFERENCE ONLY. THERE IS NOT POWER SCOPE OF WORK WITHIN THIS AREA.

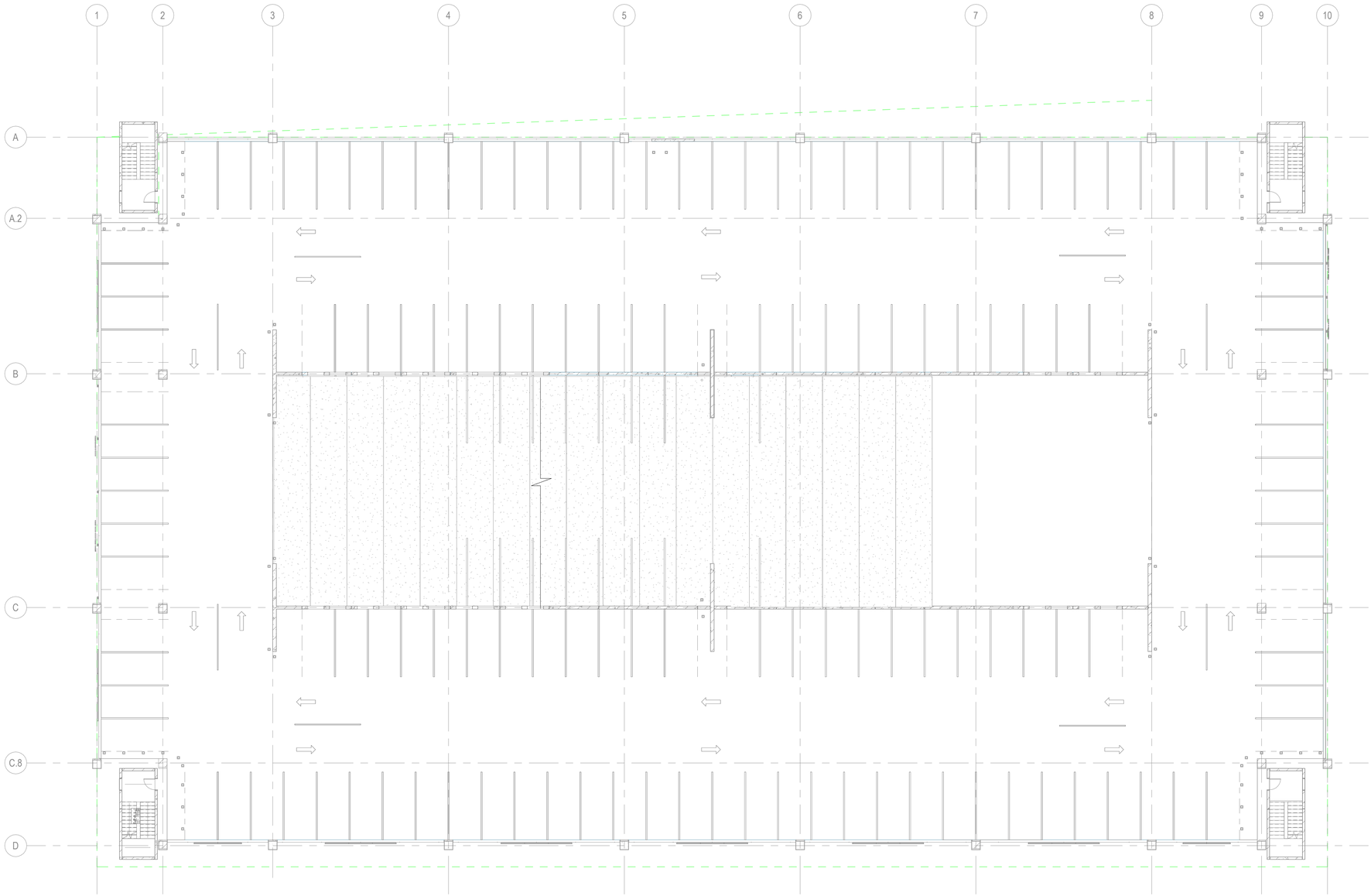

A1 POWER PLAN, SECOND FLOOR

1/16" = 1'-0"

KEYPLAN

0 10' 20' 40' 60'

1/16" = 1'-0" GRAPHIC SCALE

NOTE:
IF THIS DRAWING IS LESS THAN 34" X 22"
IT IS A REDUCED SIZE DRAWING

SYM	DESCRIPTION	DATE	APPR
1	MOD P00005	05/2023	
2	MOD P00006 AND MOD P00007	10/2025	

NAVFAC

NICHOLAS G. ZUBRZYCKI
LICENSE
No 64299
STATE OF FLORIDA
PROFESSIONAL ENGINEER

SEAL

BAMFORTH
ENGINEERS & CONSULTANTS

A/E INFO

APPROVED

FOR COMMANDER NAVFAC 11/2/2026

ACTIVITY:
Approved by J. Scott Roberts,
Asset Management Branch Head &
Supervisory Facility Planner, PWD
Beaufort, SC via email.

SATISFACTORY TO DATE 12/15/2022

DES	RLW	DRW	RLW	CHK	KLM

PM/DM KTB / RLH

BRANCH MANAGER JAS

CHIEF ENG/ARCH EJA

FP ENGINEER DSN

DEPARTMENT OF THE NAVY
NAVAL FACILITIES ENGINEERING SYSTEMS COMMAND
DC CORE:
MCAS BEAUFORT

NAVAL FACILITIES ENGINEERING SYSTEMS COMMAND ~ MID-ATLANTIC
NORFOLK, VA

BEAUFORT, SC

P-475 AIRCRAFT MAINTENANCE HANGAR - VOLUME 4 (PARKING GARAGE OPTION)

PARKING GARAGE - POWER PLAN - SECOND FLOOR

SCALE: 1/16" = 1'-0"

EPROJECT NO.: 1363603

CONSTR. CONTR. NO.

NAVFAC DRAWING NO.
12860404

SHEET 1183 OF 1412

PEP102

DRAWFORM REVISION: 25 AUGUST 2020

Autodesk Docs://0042 \MF-A1 320 F35 Maintenance Hangar/0042 F35 maint Hangar_Parking Facility-EL-R\V2024.rvt
11/6/2025 6:43:11 PM

PROVIDE PV PANELS, ASSOCIATED COMPONENTS AND GENERAL PURPOSE RECEPTACLES ONLY IF THE PARKING GARAGE PV PANEL OPTION IS AWARDED.

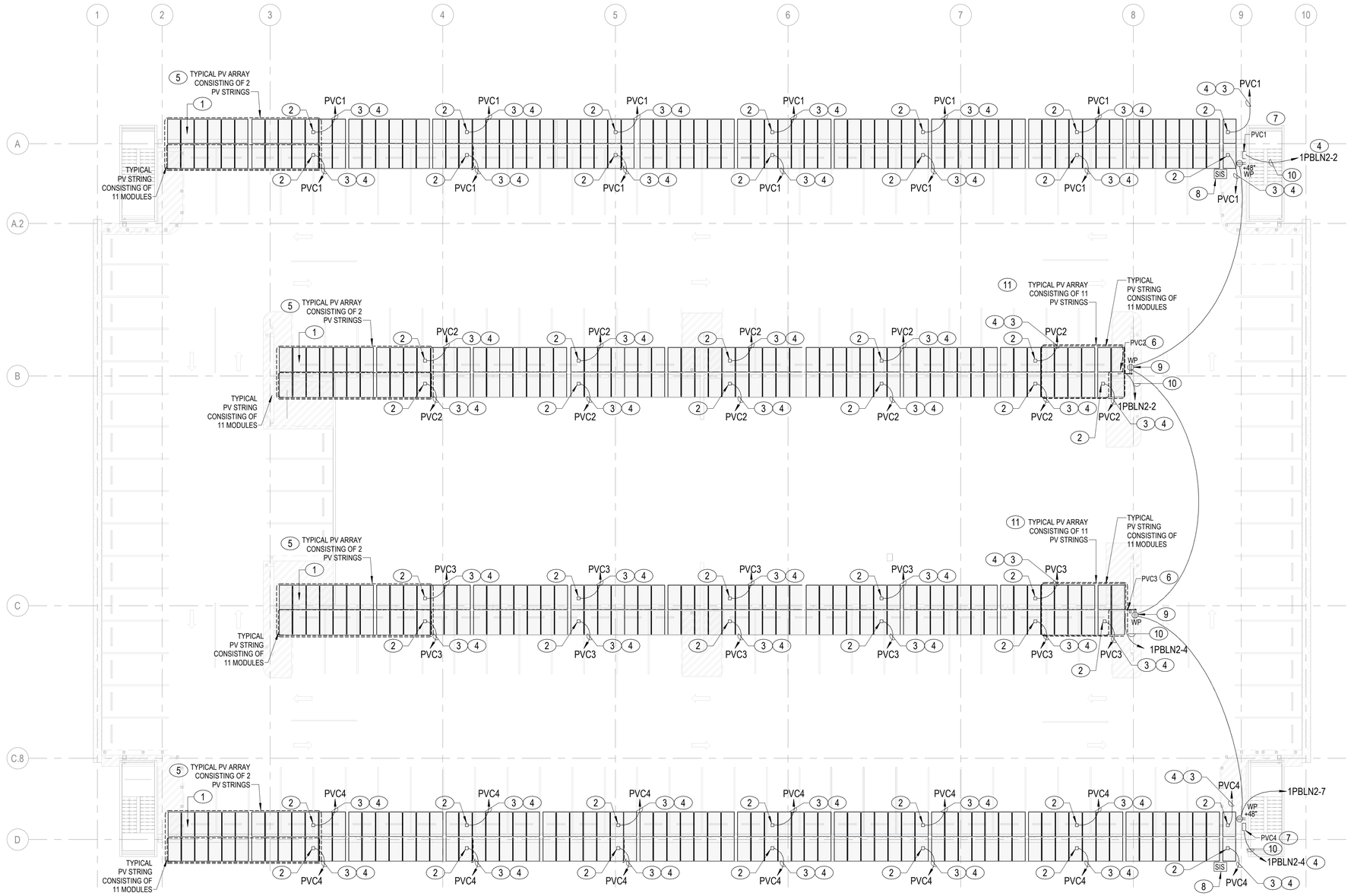

NOTES:

SHEET NOTES:

A. INSTALL WIRING IN MINIMUM 1/2" CONDUIT BETWEEN EACH ARRAY AND COMBINER BOX. ADJUST THE CONDUIT SIZE AS REQUIRED FOR PROPER WIRE FILL. PROVIDE CONDUCTORS WITH INSULATION TYPE AS RECOMMENDED BY THE PV SYSTEM MANUFACTURER. CONDUCTORS WILL BE UL LISTED FOR WET LOCATION. CONDUCTOR SIZE SHALL BE AS FOLLOWS:
   a. DISTANCES 0 - 320 FEET: #10 AWG COPPER.
   b. DISTANCES 320 - 490 FEET: #8 AWG COPPER.
B. PAINT ALL CONDUIT AND JUNCTION BOXES ON THE CANOPY STRUCTURE WITH WATERPROOF PAINT TO MATCH CANOPY STRUCTURE COLOR.
C. CLAMPS USED TO ATTACH ELECTRICAL EQUIPMENT SUCH AS PULL BOXES, CONDUIT AND PV PANELS SHALL NOT PENETRATE OR MAKE ANY PERFORATIONS ON THE CANOPY STRUCTURE.

KEY NOTES (00)

1 TYPICAL PV MODULE MOUNTED ON CANOPY STRUCTURE. 11 MODULES WILL BE CONNECTED TOGETHER IN SERIES TO FORM A PV STRING WITH SINGLE OUTPUT CIRCUIT. PV MODULE WILL BE MOUNTED WITH A MINIMUM OF 2" SPACE BETWEEN EACH MODULE AND 6" FROM THE EDGE OF THE CANOPY STRUCTURE. SEE STRUCTURAL DRAWINGS FOR PV MODULE SUPPORT BRACKET DETAIL.
2 WEATHER PROOF JUNCTION BOX MOUNTED TO THE UNDERSIDE OF THE CANOPY STRUCTURE FOR PV STRING OUTPUT CIRCUIT. SIZE BOX AS REQUIRED.
3 GALVANIZED RIGID STEEL CONDUIT FOR PV STRING OUTPUT CIRCUIT. SURFACE MOUNT WITH LISTED FASTENERS TO THE UNDERSIDE OF THE CANOPY STRUCTURE.
4 ROUTE CONDUIT ALONG THE UNDERSIDE OF THE CANOPY STRUCTURE TO THE DC COMBINER BOX INDICATED.
5 SEE B1/PEP502 FOR TYPICAL 2-STRING WIRING DIAGRAM. SEE A1/PEP502 FOR PV SYSTEM INTERCONNECTION DIAGRAM.
6 TYPICAL NEMA-3R DC COMBINER BOX MOUNTED TO EQUIPMENT RACK ALONG SIDE CANOPY STRUCTURE. SEE A1/PEP501 FOR EQUIPMENT RACK DETAIL.
7 TYPICAL NEMA-3R DC COMBINER BOX MOUNTED ON STAIRWAY EXTERIOR WALL AT 72" AFF TO TOP.
8 SOLAR IRRADIANCE SENSOR MOUNTED TO CANOPY STRUCTURE. CONNECT SENSOR TO INVERTER. ORIENT SENSOR AS RECOMMENDED BY MANUFACTURER.
9 MOUNT RECEPTACLE TO DC COMBINER EQUIPMENT RACK. SEE A1/PEP501 FOR EQUIPMENT RACK DETAIL.
10 BRANCH CIRCUIT FOR DC COMBINER BOX ELECTRONICS POWER AS REQUIRED.
11 SEE C1/PEP502 FOR TYPICAL 1-STRING WIRING DIAGRAM. SEE A1/PEP502 FOR PV SYSTEM INTERCONNECTION DIAGRAM.

PLAN NORTH

0 10' 20' 40' 60'
1/16" = 1'-0" GRAPHIC SCALE

NOTE:
IF THIS DRAWING IS LESS THAN 34" X 22"
IT IS A REDUCED SIZE DRAWING

A1 POWER PLAN, THIRD FLOOR
1/16" = 1'-0"

STM	DESCRIPTION	DATE	APPR
1	MOD P00005	05/2023	
2	MOD P00006 AND MOD P00007	10/2025	

NAVFAC

NICHOLAS G. ZUBRZYCKI LICENSE No 64299 STATE OF FLORIDA PROFESSIONAL ENGINEER

BAMFORTH ENGINEERS & ARCHITECTS

APPROVED
FOR COMMANDER NAVFAC 11/21/2025
ACTIVITY: Approved by J. Scott Roberts, Asset Management Branch Head & Supervisory Facility Planner, PWD Beaufort, SC via email.

SATISFACTORY TO DATE	12/15/2022
DES RLW / DRW RLW / CHK KLM	
PMDM	KTB / RLH
BRANCH MANAGER	JAS
CHIEF ENG/ARCH	EJA
FP ENGINEER	DSN

DEPARTMENT OF THE NAVY
NAVAL FACILITIES ENGINEERING SYSTEMS COMMAND ~ MID-ATLANTIC
NAVAL FACILITIES ENGINEERING SYSTEMS COMMAND NORFOLK, VA
DC CORE
MCAS BEAUFORT BEAUFORT, SC

P-475 AIRCRAFT MAINTENANCE HANGAR - VOLUME 4 (PARKING GARAGE OPTION)

PARKING GARAGE - POWER PLAN - THIRD FLOOR

SCALE: 1/16" = 1'-0"
EPROJECT NO.: 1363603
CONSTR. CONTR. NO.
NAVFAC DRAWING NO. 12860405
SHEET 1184 OF 1412

PEP103

DRAWFORM REVISION: 25 AUGUST 2020

Autodesk Docs://2042 VAF A1 520 F3/Maintenance Hangar/2042 F3 maint Hangar_Parking Facility-EL-R/T2024.rvt
11/6/2025 6:43:33 PM

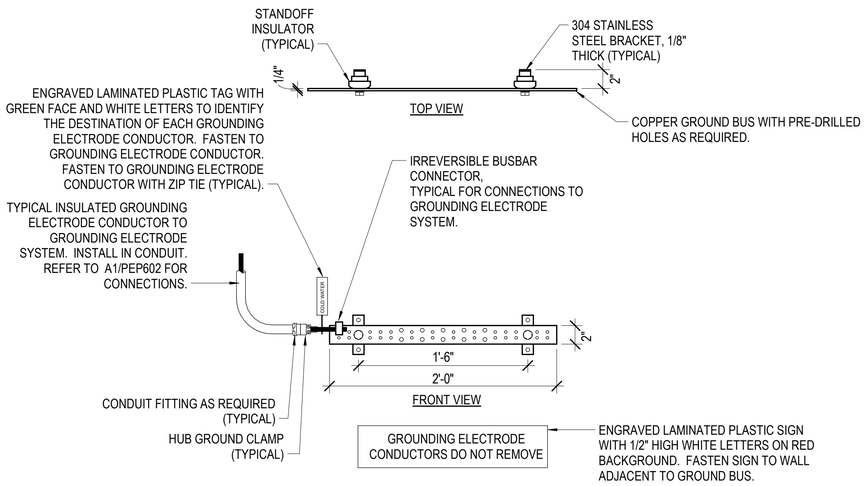

C1 TYPICAL ELECTRICAL ROOM GROUND BUS DETAIL

NOT TO SCALE

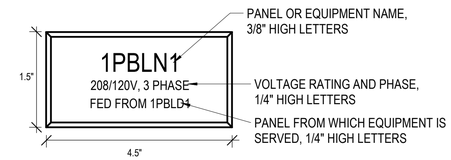

TYPICAL FOR:

1. PANELBOARDS
2. TRANSFORMERS
3. SWITCHBOARDS
4. SWITCHGEAR
5. MOTOR CONTROL CENTERS
6. LOAD INTERRUPTER SWITCHES
7. RELAY PANELS
8. CONTACTORS
9. CAPACITOR BANKS

COLOR CODE:

1. NORMAL: BLACK FACE WITH WHITE LETTERS

GENERAL NOTES:

A. PROVIDE LAMINATED PLASTIC NAMEPLATES FOR ALL EQUIPMENT ENCLOSURES AS INDICATED. NAMEPLATES SHALL BE MELAMINE PLASTIC, 0.125 INCH THICK WITH FACE AND CORE COLORS AS INDICATED. SURFACE SHALL HAVE A MATTE FINISH. CORNERS SHALL BE SQUARE AND EDGES SHALL BE BEVELED. ACCURATELY ALIGN LETTERING AND ENGRAVE INTO THE CORE.

B. NAME PLATE WIDTH SHALL BE 4.5". PROVIDE ADDITIONAL LINES OF TEXT AND INCREASE HEIGHT OF PLATE AS REQUIRED.

B4 ELECTRICAL EQUIPMENT IDENTIFICATION LABEL DETAIL

NOT TO SCALE

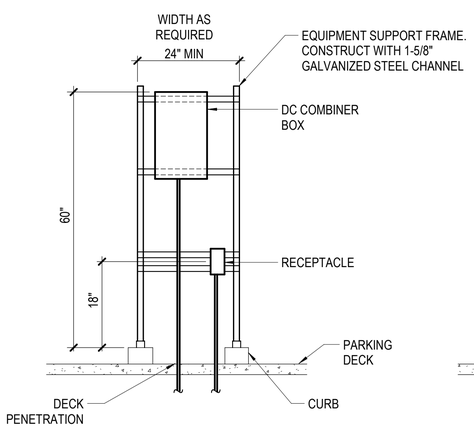

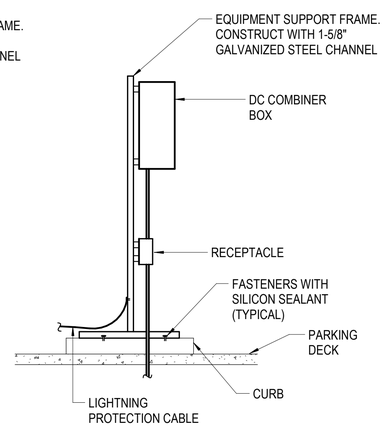

A1 ELECTRICAL EQUIPMENT RACK DETAIL

NOT TO SCALE

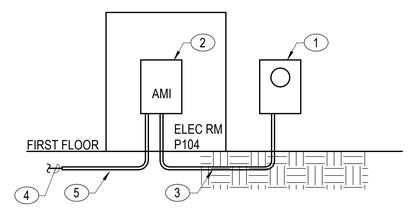

KEY NOTES: (C1/EP504)

1. ADVANCED ELECTRIC METER MOUNTED TO SIDE OF SERVICE TRANSFORMER.
2. ADVANCED METERING INFRASTRUCTURE EQUIPMENT CABINET. SEE C2/PEP101 FOR LOCATION.
3. 1" CONDUIT WITH NETWORKING WIRING AS REQUIRED. COORDINATE WITH PUBLIC WORKS AMI SYSTEM REPRESENTATIVE FOR WIRING REQUIREMENTS.
4. 6-STRAND SINGLE MODE FIBER OPTIC CABLE TO FIBER OPTIC PATCH PANEL IN HANGAR TELECOMMUNICATIONS ROOM 145.
5. TELECOMMUNICATIONS DUCTBANK FROM AMI CABINET TO TTH-1B. SEE SHEET TS105 IN VOLUME 1 FOR LOCATION AND ROUTING.

A3 METERING CONNECTION DIAGRAM - PARKING GARAGE

NOT TO SCALE

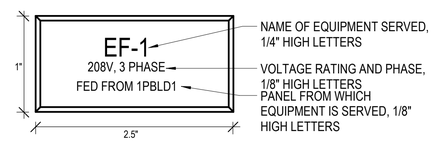

TYPICAL FOR:

1. DISCONNECT SWITCHES
2. ENCLOSED CIRCUIT BREAKERS
3. INDIVIDUAL MOTOR STARTERS
4. VARIABLE FREQUENCY DRIVES
5. STARTERS AND CONTROL PANELS PROVIDED WITH MECHANICAL EQUIPMENT

COLOR CODE:

1. NORMAL: BLACK FACE WITH WHITE LETTERS

GENERAL NOTES:

A. PROVIDE LAMINATED PLASTIC NAMEPLATES FOR ALL EQUIPMENT ENCLOSURES AS INDICATED. NAMEPLATES WILL BE MELAMINE PLASTIC, 0.125 INCH THICK WITH FACE AND CORE COLORS AS INDICATED. SURFACE WILL HAVE A MATTE FINISH. CORNERS WILL BE SQUARE AND EDGES WILL BE BEVELED. ACCURATELY ALIGN LETTERING AND ENGRAVE INTO THE CORE.

B. NAME PLATE WIDTH WILL BE 2 1/2". PROVIDE ADDITIONAL LINES OF TEXT AND INCREASE HEIGHT OF PLATE AS REQUIRED.

A4 MISCELLANEOUS ELECTRICAL EQUIPMENT LABEL DETAIL

NOT TO SCALE

NOTE:
IF THIS DRAWING IS LESS THAN 34" X 22"
IT IS A REDUCED SIZE DRAWING

STM	DESCRIPTION	DATE	APPR
1	MOD P00005	05/2023	
2	MOD P00006 AND MOD P00007	10/2025	

NAVFAC

NICHOLAS G. ZUBRZYCKI LICENSE No 64299 STATE OF FLORIDA PROFESSIONAL ENGINEER 11/12/2025

BAMFORTH ENGINEERS • CONTRACTORS

AE INFO

APPROVED

FOR COMMANDER NAVFAC 11/12/2025

ACTIVITY: Approved by J. Scott Roberts, Asset Management Branch Head & Supervisory Facility Planner, PWD Beaufort, SC via email.

SATISFACTORY TO DATE 12/15/2022

DES RLW	DRW RLW	CHK KLM	
PMDM	KTB / RLH		
BRANCH MANAGER	JAS		
CHIEF ENG/ARCH	EJA		
FP ENGINEER	DSN		

DEPARTMENT OF THE NAVY
NAVAL FACILITIES ENGINEERING SYSTEMS COMMAND ~ MID-ATLANTIC
NORFOLK, VA

DC CORE:
MCAS BEAUFORT

BEAUFORT, SC

P-475 AIRCRAFT MAINTENANCE HANGAR - VOLUME 4 (PARKING GARAGE OPTION)

ELECTRICAL DETAILS

SCALE: As indicated
EPROJECT NO.: 1363603
CONSTR. CONTR. NO.
NAVFAC DRAWING NO. 12860406
SHEET 1185 OF 1412

PEP501

DRAWFORM REVISION: 25 AUGUST 2020

Autodesk Docs://2042 MFAT 520 F35 Maintenance Hangar/2042-F35 maint Hangar_Parking Facility-EL-R/T2024.rvt
11/6/2025 6:43:43 PM

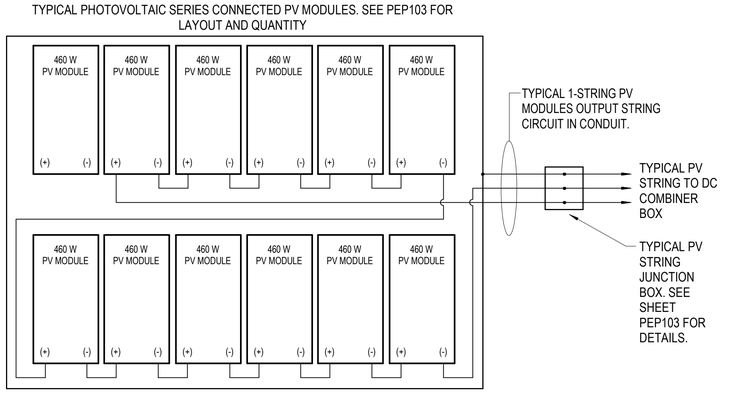

DIAGRAM IS ONLY VALID IF THE PARKING GARAGE PV PANEL OPTION IS AWARDED.

C1 TYPICAL 1-STRING PV ARRAY WIRING DIAGRAM

NOT TO SCALE

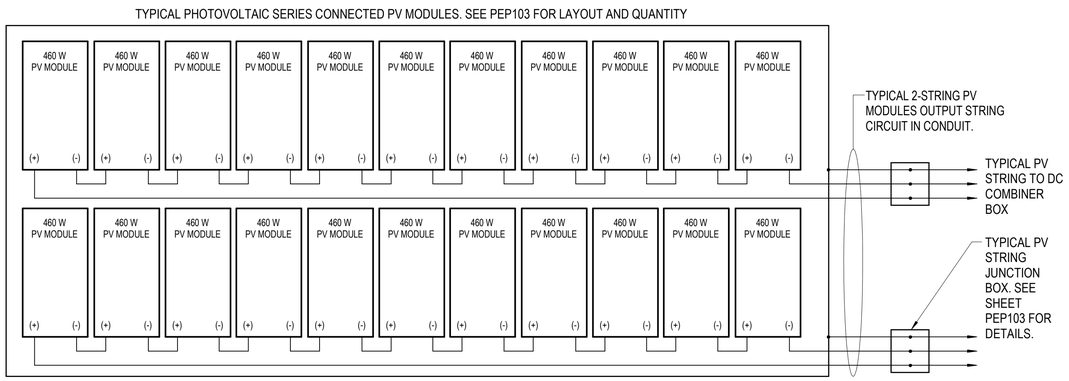

DIAGRAM IS ONLY VALID IF THE PARKING GARAGE PV PANEL OPTION IS AWARDED.

B1 TYPICAL 2-STRING PV ARRAY WIRING DIAGRAM

NOT TO SCALE

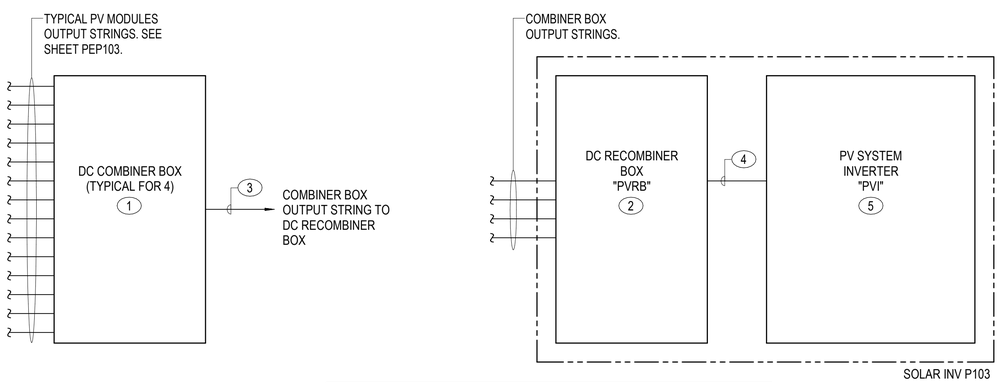

DIAGRAM IS ONLY VALID IF THE PARKING GARAGE PV PANEL OPTION IS AWARDED.

A1 PV SYSTEM INTERCONNECTION DIAGRAM

NOT TO SCALE

ZERO-EXPORT SYSTEM SEQUENCE OF OPERATIONS

THE PHOTOVOLTAIC (PV) SYSTEM'S POWER OUTPUT SHALL BE CONTROLLED BY AN INTEGRATED, CLOSED-LOOP, ZERO-EXPORT CONTROL SYSTEM. THE SYSTEM SHALL OPERATE ACCORDING TO THE FOLLOWING DETAILED CONTROL LOGIC TO ENSURE POWER IS NEVER EXPORTED TO THE UTILITY GRID:

A. SYSTEM MONITORING: THE REVENUE-GRADE METER AND CURRENT TRANSFORMERS (CTS) INSTALLED AT THE MAIN SERVICE ENTRANCE SHALL CONTINUOUSLY MONITOR THE DIRECTION AND MAGNITUDE OF REAL POWER (KW) FLOWING BETWEEN THE UTILITY AND THE FACILITY. THIS DATA SHALL BE TRANSMITTED IN REAL-TIME TO THE INVERTER'S INTEGRATED POWER PLANT CONTROLLER (PPC) VIA THE DEDICATED COMMUNICATION PATHWAY.

B. NORMAL OPERATION (POWER IMPORT): DURING ALL PERIODS WHERE THE FACILITY'S TOTAL ELECTRICAL LOAD EXCEEDS THE POWER BEING GENERATED BY THE PV SYSTEM, THE MONITORING SYSTEM WILL DETECT A NET POWER IMPORT FROM THE UTILITY. UNDER THIS CONDITION, THE PPC SHALL COMMAND THE INVERTER TO OPERATE AT ITS MAXIMUM POWER POINT (MPP) TO MAXIMIZE ON-SITE ENERGY PRODUCTION AND REDUCE THE AMOUNT OF POWER IMPORTED FROM THE GRID.

C. POWER CURTAILMENT (EXPORT PREVENTION): UPON DETECTION OF A REVERSE POWER FLOW CONDITION (POWER FLOWING FROM THE FACILITY TOWARDS THE UTILITY GRID) THAT EXCEEDS A NOMINAL ZERO-POWER EXPORT SETPOINT, THE PPC SHALL IMMEDIATELY ISSUE A DYNAMIC CURTAILMENT COMMAND TO THE INVERTER. THE INVERTER SHALL INSTANTANEOUSLY AND CONTINUOUSLY MODULATE ITS REAL POWER OUTPUT, SHIFTING ITS OPERATING POINT AWAY FROM THE MPP AS REQUIRED TO MAINTAIN THE NET POWER FLOW AT THE SERVICE ENTRANCE AT OR SLIGHTLY BELOW THE ZERO SETPOINT. THIS IS A MODULATING, CLOSED-LOOP CONTROL FUNCTION, NOT AN ON/OFF ACTION.

D. FAIL-SAFE PROTOCOL (LOSS OF COMMUNICATION): IN THE EVENT OF A LOSS OF THE COMMUNICATION SIGNAL BETWEEN THE MONITORING METER AND THE INVERTER'S PPC, OR IF THE METER DATA IS INVALID, THE INVERTER SHALL IMMEDIATELY AND AUTOMATICALLY EXECUTE A FAIL-SAFE PROTOCOL. THIS PROTOCOL REQUIRES THE INVERTER TO SAFELY RAMP ITS ACTIVE POWER OUTPUT TO ZERO WITHIN A PREDEFINED TIME (TYPICALLY <2 SECONDS) AND INITIATE A "COMMUNICATION FAULT" ALARM CONDITION. THE INVERTER SHALL REMAIN IN THIS SAFE, NON-PRODUCING STATE UNTIL A STABLE AND VALID COMMUNICATION LINK IS RE-ESTABLISHED.

E. SYSTEM RECOVERY: UPON RESTORATION OF A STABLE COMMUNICATION LINK, THE INVERTER SHALL VERIFY SYSTEM CONDITIONS AND, IF STABLE, AUTOMATICALLY RE-INITIATE A SOFT-START SEQUENCE. THE INVERTER WILL GRADUALLY RAMP UP ITS POWER OUTPUT, SUBJECT TO THE IMMEDIATE COMMANDS OF THE ACTIVE ZERO-EXPORT CONTROL LOOP.

B3 ZERO-EXPORT SYSTEM SEQUENCE OF OPERATIONS

NTS

PV SYSTEM DESIGN CALCULATIONS

BEAUFORT, SC
AMBIENT HIGH = 36.5 °C
AMBIENT LOW = -6.4 °C

CALCULATIONS
PV MODULE POWER = 460 W
RATED V_{MP} = 41.8 V
MIN V_{OC} = 35.56 V
MAX V_{OC} = 54.33 V
STRING SIZE = 11
STRING POWER = 6050 W PER STRING
TOTAL DESIGNED STRINGS = 50
TOTAL DESIGNED PV MODULES = 550
NOMINAL DESIGNED SYSTEM POWER = 253 KW

DC COMBINER BOX SCHEDULE

BOX NAME	VOLTAGE	TOTAL CONNECTED INPUT STRINGS	MAX NUMBER OF INPUT STRINGS	TOTAL OUTPUT STRINGS	OUTPUT STRING FUSE SIZE	ENCLOSURE	CONNECTED POWER
PVC1	600 VDC	14	16	1	225 A	NEMA 3R	70.8 KW
PVC2	600 VDC	11	16	1	175 A	NEMA 3R	55.7 KW
PVC3	600 VDC	11	16	1	175 A	NEMA 3R	55.7 KW
PVC4	600 VDC	14	16	1	225 A	NEMA 3R	70.8 KW

DC RECOMBINER BOX SCHEDULE

BOX NAME	VOLTAGE	TOTAL CONNECTED INPUT STRINGS	MAX NUMBER OF INPUT STRINGS	TOTAL OUTPUT STRINGS	ENCLOSURE	CONNECTED POWER
PVRB	600 VDC	4	8	1	NEMA 1	253 KW

NOTE:
IF THIS DRAWING IS LESS THAN 34" X 22"
IT IS A REDUCED SIZE DRAWING

NOTES:

KEY NOTES (00)

1. DC COMBINER BOX WITH ARC-FAULT SENSOR AND RAPID SHUTDOWN. PROVIDE A 15A DC FUSE AT EACH "+" INPUT STRING AND FUSE SIZE AS INDICATED IN THE DC COMBINER BOX SCHEDULE AT EACH "+" OUTPUT STRING. SEE DC COMBINER BOX SCHEDULE ON THIS SHEET.
2. DC RECOMBINER BOX. SEE DC RECOMBINER BOX SCHEDULE ON THIS SHEET.
3. TYPICAL COMBINER BOX SINGLE OUTPUT STRING CONSISTING OF (1) POSITIVE, (1) NEGATIVE, AND (1) GROUND CONDUCTOR. SEE SHEET PEP601 FOR DETAILS.
4. RECOMBINER BOX OUTPUT STRING TO PV INVERTER. SEE SHEET PEP601 FOR ADDITIONAL INFORMATION.
5. PAD-MOUNTED, 250KW (MINIMUM) THREE-PHASE INVERTER, 480Y/277V, 60HZ. INVERTER SHALL BE A GRID-TIED, NON-ISOLATED, SMART INVERTER LISTED AND LABELED TO UL 1741-SA, CERTIFYING COMPLIANCE WITH IEEE 1547-2018. THE INVERTER SHALL BE EQUIPPED WITH INTEGRAL AND MANDATORY SAFETY AND CONTROL FUNCTIONS INCLUDING: ANTI-ISLANDING PROTECTION TO CEASE-TO-ENERGIZE AND DISCONNECT UPON LOSS OF THE UTILITY SOURCE; DC GROUND-FAULT DETECTION AND INTERRUPTION PER NEC 690.41(B); AND DC REVERSE-CURRENT PROTECTION. FURTHERMORE, THE INVERTER'S FIRMWARE SHALL SUPPORT REMOTE REAL POWER CONTROL (CURTAILMENT) AND SHALL BE PAIRED WITH A ZERO-EXPORT CONTROL SYSTEM AS DETAILED IN THE DRAWINGS. THE UNIT SHALL INCLUDE AN INTEGRATED, LOAD-BREAK-RATED DC DISCONNECTING MEANS SERVING AS THE PRIMARY DISCONNECT FOR THE DC INPUTS.. SEE SHEET PEP601 FOR ADDITIONAL INFORMATION.

STM	DESCRIPTION	DATE	APPR
1	MOD P00005	05/2023	
2	MOD P00006 AND MOD P00007	10/2025	

NAVFAC

NICHOLAS G. ZUBRZYCKI LICENSE No 64299 STATE OF FLORIDA PROFESSIONAL ENGINEER

BAMFORTH ENGINEERS & ARCHITECTS

APPROVED
FOR COMMANDER NAVFAC 11/12/2025

ACTIVITY: Approved by J. Scott Roberts, Asset Management Branch Head & Supervisory Facility Planner, PWD Beaufort, SC via email.

SATISFACTORY TO DATE 12/15/2022

DES RLW | DRW RLW | CHK KLM
PM/DM KTB / RLH
BRANCH MANAGER JAS
CHIEF ENG/ARCH EJA
FP ENGINEER DSN

DEPARTMENT OF THE NAVY
NAVAL FACILITIES ENGINEERING SYSTEMS COMMAND
DC CORE
NAVAL FACILITIES ENGINEERING SYSTEMS COMMAND ~ MID-ATLANTIC
NORFOLK, VA
MCAS BEAUFORT
BEAUFORT, SC
P-475 AIRCRAFT MAINTENANCE HANGAR - VOLUME 4 (PARKING GARAGE OPTION)
ELECTRICAL DETAILS

SCALE: As indicated
EPROJECT NO.: 1363603
CONSTR. CONTR. NO.
NAVFAC DRAWING NO. 12860407
SHEET 1186 OF 1412

PEP502

DRAWFORM REVISION: 25 AUGUST 2020

Autodesk Docs://20245_NAFLT_SCI_733 Maintenance Hangar/20245 F36 asset Hangar_Parking Facility-EL-R17208.rvt
11/6/2025 6:43:51 PM

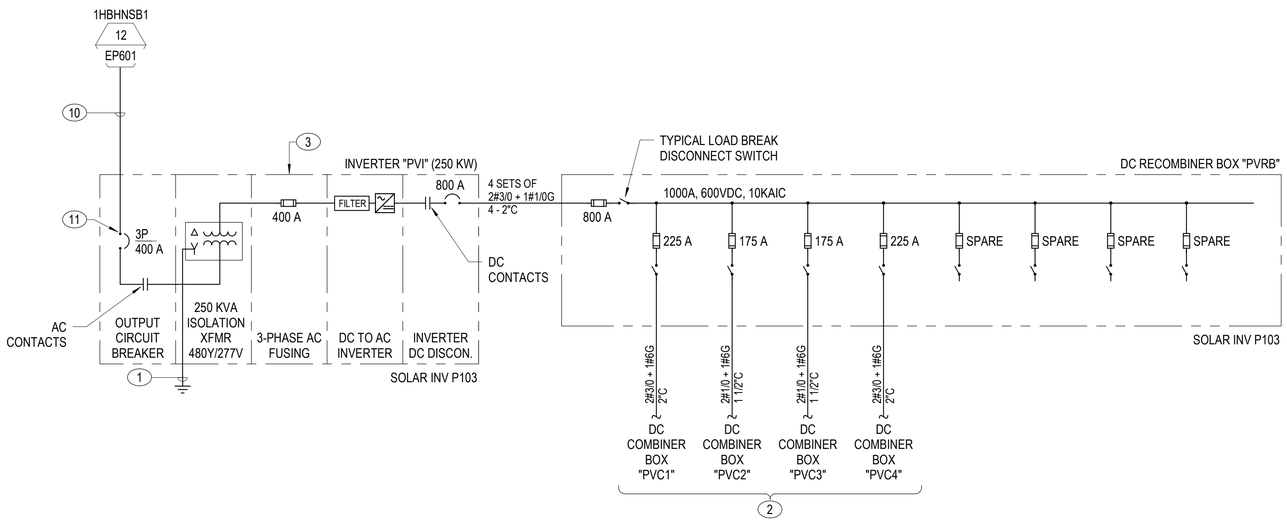

SINGLE LINE DIAGRAM IS ONLY VALID IF THE PARKING GARAGE PV PANEL OPTION IS AWARDED.

C1 PV SYSTEM - SINGLE LINE DIAGRAM

NOT TO SCALE

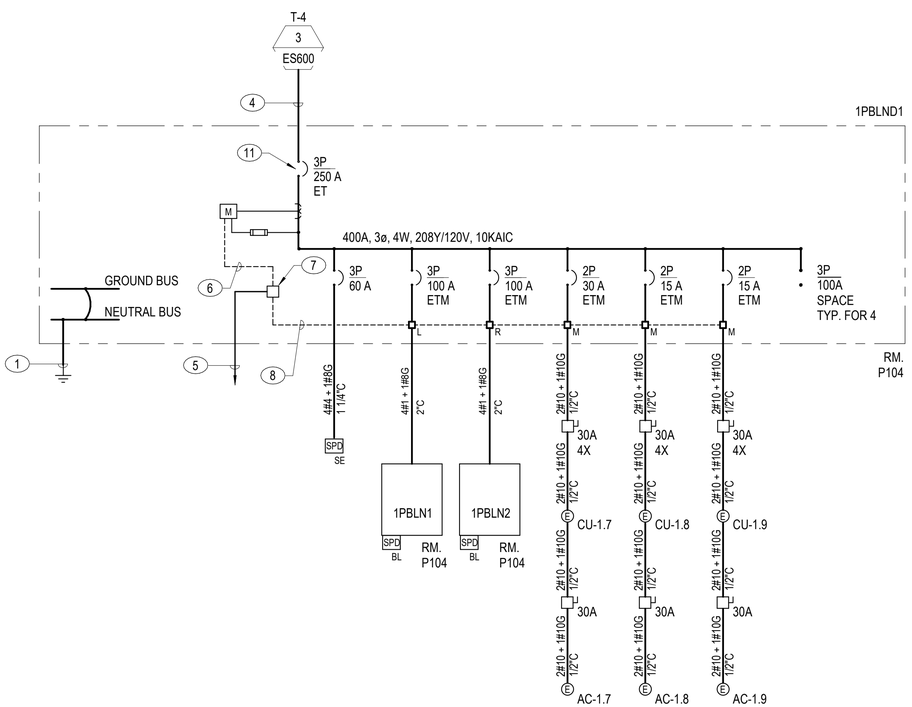

A1 PARKING GARAGE - SINGLE LINE DIAGRAM

NOT TO SCALE

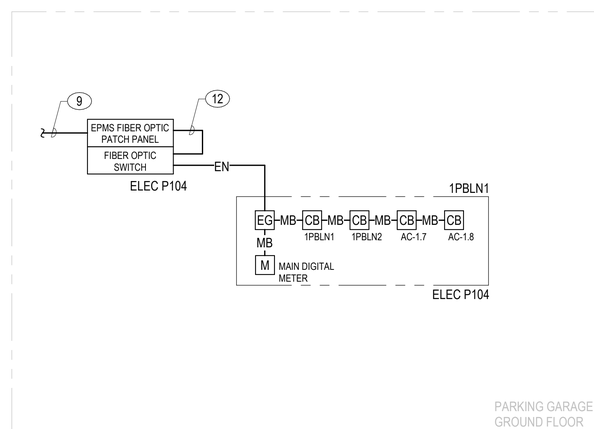

A3 PARKING GARAGE ELECTRIC POWER METERING RISER DIAGRAM

NOT TO SCALE

NOTE:
IF THIS DRAWING IS LESS THAN 34" X 22"
IT IS A REDUCED SIZE DRAWING

POWER METERING LEGEND

EG	ETHERNET GATEWAY PROVIDED WITH SWITCHBOARD OR PANELBOARD.
M	MULTI-FUNCTION DIGITAL METER PROVIDED WITH THE SWITCHBOARD.
CB	ELECTRONIC TRIP CIRCUIT BREAKER WITH INTEGRAL POWER METERING. SUBSCRIPT INDICATES LOAD SERVED.
–EN–	CATEGORY 6 RATED ETHERNET CABLE IN 3/4" CONDUIT.
–MB–	MODBUS SERIAL CABLE.

NOTES:

KEY NOTES (00)

1. SEE SHEET PEP602 FOR GROUNDING REQUIREMENTS.
2. INPUT STRINGS FROM DC COMBINER BOXES. SEE A1/PEP103 FOR LOCATION AND A1/PEP502 FOR ADDITIONAL INFORMATION.
3. SEE C2/PEP101 FOR LOCATION.
4. REFER TO SHEET EP601 IN VOLUME 1 FOR DUCT BANK AND FEEDER CONFIGURATION. SEE SHEET EP601 IN VOLUME 2B FOR FEEDER CONTINUATION.
5. NETWORK CONNECTION TO THE POWER MONITORING SYSTEM SERVER. SEE A3/OEP600 IN VOLUME 3 FOR CONNECTION DIAGRAM.
6. ASHRAE 90.1 ELECTRICAL ENERGY MODBUS COMMUNICATIONS WIRING FOR TRANSMISSION OF ELECTRICAL DATA FROM THE MULTI-FUNCTION DIGITAL METER TO THE POWER MONITORING SYSTEM SERVER.
7. ETHERNET GATEWAY LOCATED WITHIN ELECTRICAL PANELBOARD. THE GATEWAY SHALL BE UL LISTED FOR USE WITHIN THE ELECTRICAL PANELBOARD AND SUPPLIED WITH THE PANELBOARD.
8. ASHRAE 90.1 ELECTRICAL ENERGY MONITORING MODBUS COMMUNICATIONS WIRING FOR TRANSMISSION OF ELECTRICAL METERING DATA FROM THE INDIVIDUAL CIRCUIT BREAKERS TO THE POWER MONITORING SYSTEM SERVER.
9. 6 STRAND SM FIBER OPTIC CABLE IN TELECOMMUNICATIONS DUCTBANK TO HANGAR TELECOMMUNICATIONS ROOM 145. REFER TO SHEET TS105 IN VOLUME 1 FOR DUCTBANK ROUTING.
10. REFER TO SHEET ES100 IN VOLUME 1 FOR DUCT BANK AND FEEDER CONFIGURATION. SEE SHEET EP601 IN VOLUME 2B FOR FEEDER CONTINUATION.
11. PROVIDE LUGS SUITABLE FOR TERMINATION OF CONDUCTORS INDICATED ON SHEET ES100A IN VOLUME 1.
12. FIBER OPTIC PATCH CORD.

STM	DESCRIPTION	DATE	APPR
1	MOD P00005	05/2023	
2	MOD P00006 AND MOD P00007	10/2025	

NAVFAC

NICHOLAS G. ZUBRZYCKI
LICENSE
No 64299
STATE OF FLORIDA
PROFESSIONAL ENGINEER

BAMFORTH
ENGINEERS & CONTRACTORS

AE INFO

APPROVED

FOR COMMANDER NAVFAC

ACTIVITY
Approved by J. Scott Roberts,
Asset Management Branch Head &
Supervisory Facility Planner, PWD
Beaufort, SC via email.

SATISFACTORY TO DATE 12/15/2022

DES	RLW	DRW	RLW	CHK	KLM
PM/DM	KTB / RLH				
BRANCH MANAGER	JAS				
CHIEF ENG/ARCH	EJA				
FP ENGINEER	DSN				

DEPARTMENT OF THE NAVY
NAVAL FACILITIES ENGINEERING SYSTEMS COMMAND
DC CORE
NAVAL FACILITIES ENGINEERING SYSTEMS COMMAND - MID-ATLANTIC NORFOLK, VA
MCAS BEAUFORT
BEAUFORT, SC
P-475 AIRCRAFT MAINTENANCE HANGAR - VOLUME 4 (PARKING GARAGE OPTION)
SINGLE LINE DIAGRAM

SCALE: NTS
EPROJECT NO.: 1363603
CONSTR. CONTR. NO.
NAVFAC DRAWING NO. 12860408
SHEET 1187 OF 1412

PEP601

DRAWFORM REVISION: 25 AUGUST 2020

Autodesk Docs://20242 VMFA1 F35 Maintenance Hangar/20242 F35 maint Hangar_Parking Facility-EL-R17.2024.rvt
11/5/2025 6:43:38 PM

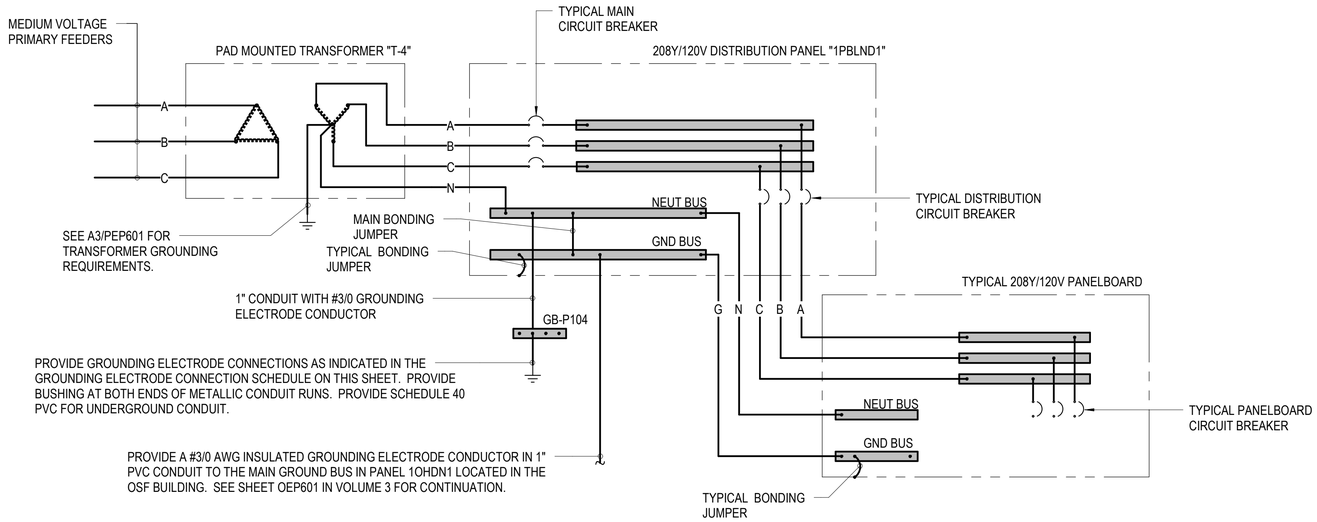

GROUNDING ELECTRODE SYSTEM SCHEDULE

CONNECTION	CONDUCTOR SIZE	CONDUIT SIZE
(3)-3/4" x 10'-0" GROUND RODS. SPACE THE GROUND RODS AT 10'-0" ON CENTER IN TRIANGULAR MANNER. PROVIDE TEST WELL FOR EACH GROUND ROD. UTILIZE EXOTHERMIC WELD CONNECTIONS.	#3/0	1"
LIGHTNING PROTECTION SYSTEM. UTILIZE EXOTHERMIC WELD CONNECTIONS.	#3/0	1"
WHERE PRESENT, BOND TO THE NEAREST STRUCTURAL STEEL COLUMN. UTILIZE AN EXOTHERMIC WELD CONNECTION AT INACCESSIBLE LOCATIONS.	#3/0	1"
BUILDING'S FOUNDATION REINFORCING BARS. UTILIZE EXOTHERMIC WELD CONNECTIONS.	#3/0	1"

LEGEND

—A—	PHASE CONDUCTOR "A"	—DC GEC—	DC GROUND ELECTRODE CONDUCTOR ROUTED IN CONDUIT.
—B—	PHASE CONDUCTOR "B"	—DC EGC—	DC EQUIPMENT GROUND CONDUCTOR ROUTED IN CONDUIT WITH DC CONDUCTORS.
—C—	PHASE CONDUCTOR "C"	—G—	AC EQUIPMENT GROUND CONDUCTOR ROUTED IN CONDUIT WITH PHASE CONDUCTORS.
—N—	NEUTRAL CONDUCTOR	⏚	GROUNDING ELECTRODE

NOTES:

SHEET NOTES:

A. THIS GROUNDING DIAGRAM REPRESENTS THE TYPICAL GROUNDING REQUIREMENTS FOR THE ELECTRICAL DISTRIBUTION SYSTEM. ALL COMPONENTS AND CONNECTIONS ARE NOT SHOWN.

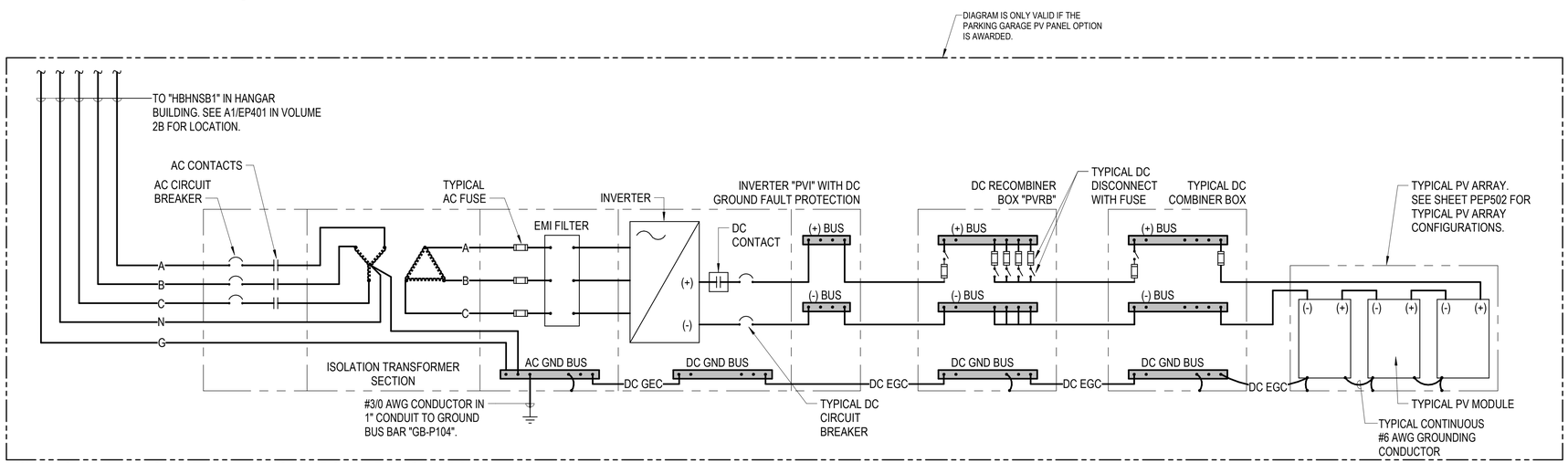

A1 PARKING GARAGE OVERALL GROUNDING DIAGRAM

NOT TO SCALE

NOTE:
IF THIS DRAWING IS LESS THAN 34" X 22"
IT IS A REDUCED SIZE DRAWING

STM	DESCRIPTION	DATE	APPR
1	MOD P00005	05/2023	
2	MOD P00006 AND MOD P00007	10/2025	

NAVFAC

NICHOLAS G. ZUBRZYCKI LICENSE No 64299 STATE OF FLORIDA PROFESSIONAL ENGINEER

BAMFORTH ENGINEERS • CONTRACTORS

AE INFO

APPROVED

FOR COMMANDER NAVFAC

ACTIVITY: Approved by J. Scott Roberts, Asset Management Branch Head & Supervisory Facility Planner, PWD Beaufort, SC via email.

SATISFACTORY TO DATE 12/15/2022

DES	RLW	DRW	RLW	CHK	KLM
PM/DM	KTB / RLH				
BRANCH MANAGER	JAS				
CHIEF ENG/ARCH	EJA				
FP ENGINEER	DSN				

DEPARTMENT OF THE NAVY
NAVAL FACILITIES ENGINEERING SYSTEMS COMMAND
NAVAL FACILITIES ENGINEERING SYSTEMS COMMAND ~ MID-ATLANTIC
NORFOLK, VA
DC CODE:
MCAS BEAUFORT
BEAUFORT, SC
P-475 AIRCRAFT MAINTENANCE HANGAR - VOLUME 4 (PARKING GARAGE OPTION)
OVERALL GROUNDING DIAGRAM

SCALE: 12" = 1'-0"
EPROJECT NO.: 1363603
CONSTR. CONTR. NO.
NAVFAC DRAWING NO. 12860409
SHEET 1188 OF 1412

PEP602

DRAWFORM REVISION: 25 AUGUST 2020

Autodesk Docs://2002 VMF A1 102 F35 Maintenance Hangar/2006A3 F35 maint Hangar_Parking Facility-EL-R17.2024.rvt
11/6/2025 6:44:04 PM

PANEL: 1PBLN1

LOCATION: ELEC P104 | **VOLTS:** 208Y/120V | **A.I.C. RATING:** 10,000A
FED FROM: 1PBLND1 | **PHASES:** 3 | **MAINS TYPE:** MLO
MOUNTING: SURFACE | **WIRE:** 4 | **BUS RATING:** 225 A
ENCLOSURE: NEMA 1 | **MCB RATING:** N/A

NOTES:

CKT	CIRCUIT DESCRIPTION	TRIP (AMPS)	POLES	PHASE A (VA)		PHASE B (VA)		PHASE C (VA)		POLES	TRIP (AMPS)	CIRCUIT DESCRIPTION	CKT
1	LTG - FIRST FLOOR	20	1	396	284					1	20	LTG - FIRST FLOOR	2
3	LTG - SITE LIGHTING	20	1			180	394			1	20	LTG - FIRST FLOOR	4
5	LTG - SECOND FLOOR	20	1					224	336	1	20	LTG - SECOND FLOOR	6
7	LTG - SECOND FLOOR	20	1	514	392					1	20	LTG - SECOND FLOOR	8
9	LTG - THIRD FLOOR	20	1			560	560			1	20	LTG - THIRD FLOOR	10
11	LTG - THIRD FLOOR	20	1					534	534	1	20	LTG - THIRD FLOOR	12
13	LTG - SECOND FLOOR - RAMP	20	1	336	118					1	20	LTG - EXTERIOR	14
15	LTG - EXTERIOR	20	1			59	472			1	20	LTG - SITE LIGHTING	16
17	LTG - SITE LIGHTING	20	1					360	1894	1	20	LTG - FIRST FLOOR - WEST ENTRANCE	18
19	LTG - FIRST FLOOR - EAST ENTRANCE	20	1	1370	456					1	20	LTG - SECOND FLOOR	20
21	LTG - STAIR 1	20	1			110	672			1	20	LTG - SECOND FLOOR	22
23	LTG - STAIR 3	20	1					108	110	1	20	LTG - STAIR 2	24
25	LTG - RM. P104, P103, P102	20	1	198	108					1	20	LTG - STAIR 4	26
27	PLRP1 - RM. P104	20	1			0	320			1	20	LTG - SITE LIGHTING	28
29	SPARE	20	1					0	44	1	20	LTG P105	30
31	SPARE	20	1	0	--					1	--	SPACE ONLY	32
33	SPARE	20	1			0	--			1	--	SPACE ONLY	34
35	SPARE	20	1					0	--	1	--	SPACE ONLY	36
37	SPD	30	3	0	--					1	--	SPACE ONLY	38
39	--	--	--			0	--			1	--	SPACE ONLY	40
41	--	--	--					0	--	1	--	SPACE ONLY	42
	TOTAL AMPS A-N:	36		4168		3312		4135		**KVA**	**AMPS**		
	TOTAL AMPS B-N:	28							**TOTAL CONNECTED:**	11.61	32		
	TOTAL AMPS C-N:	36							**TOTAL DEMAND:**	11.61	32		

NOTES:

PANEL: 1PBLN2

LOCATION: ELEC P104 | **VOLTS:** 208Y/120V | **A.I.C. RATING:** 10,000A
FED FROM: 1PBLND1 | **PHASES:** 3 | **MAINS TYPE:** MLO
MOUNTING: SURFACE | **WIRE:** 4 | **BUS RATING:** 225 A
ENCLOSURE: NEMA 1 | **MCB RATING:** N/A

NOTES:

CKT	CIRCUIT DESCRIPTION	TRIP (AMPS)	POLES	PHASE A (VA)		PHASE B (VA)		PHASE C (VA)		POLES	TRIP (AMPS)	CIRCUIT DESCRIPTION	CKT
1	REC - RM. P103	20	1	180	200					1	20	PVC1 & PVC2 POWER	2
3	REC - RM. P104	20	1			180	200			1	20	PVC3 & PVC4 POWER	4
5	REC - RM. P102	20	1					180	360	1	20	REC P105 and EXTERIOR	6
7	REC - LEVEL 3 SERVICE RECEPTACLES	20	1	720	3333					3	60	AIR COMPORESSOR P105	8
9	NITROGEN GENERATOR CABINET P105	20	1			300	3333			--	--	--	10
11	FIRE ALARM CONTROL PANEL P104	20	1					800	3333	--	--	--	12
13	FIRE ALARM RADIO TRANSMITTER AND BOOSTER PANEL P104	20	1	480	0					1	20	SPARE	14
15	SPARE	20	1			0	0			1	20	SPARE	16
17	SPARE	20	1					0	0	1	20	SPARE	18
19	SPARE	20	1	0	--					1	--	SPACE ONLY	20
21	SPACE ONLY	--	1			--	--			1	--	SPACE ONLY	22
23	SPACE ONLY	--	1					--	--	1	--	SPACE ONLY	24
25	SPD	30	3	0	--					1	--	SPACE ONLY	26
27	--	--	--			0	--			1	--	SPACE ONLY	28
29	--	--	--					0	--	1	--	SPACE ONLY	30
	TOTAL AMPS A-N:	40		4765		3973		4577		**KVA**	**AMPS**		
	TOTAL AMPS B-N:	33							**TOTAL CONNECTED:**	13.31	37		
	TOTAL AMPS C-N:	39							**TOTAL DEMAND:**	11.92	33		

NOTES:

SURGE PROTECTIVE DEVICE SCHEDULE

DESIGNATION	REPETITIVE SURGE CAPACITY	VOLTAGE RATING AND CONFIGURATION	PROTECTION MODULES	CATEGORY TYPE	SHORT CIRCUIT RATING
BH	100,000A	480Y/277V, 3Φ, 5W	L-L, L-N, L-G, N-G	BRANCH	100,000A
BL	100,000A	208Y/120V, 3Φ, 5W	L-L, L-N, L-G, N-G	BRANCH	100,000A
DH	200,000A	480Y/277V, 3Φ, 5W	L-L, L-N, L-G, N-G	DISTRIBUTION	100,000A
DL	200,000A	208Y/120V, 3Φ, 5W	L-L, L-N, L-G, N-G	DISTRIBUTION	100,000A
SE	200,000A	480Y/277V, 3Φ, 5W	L-L, L-N, L-G, N-G	SERVICE ENTRANCE	100,000A

SURGE PROTECTIVE DEVICE SCHEDULE NOTES:

A. NIPPLE MOUNT BRANCH SURGE PROTECTIVE DEVICES TO BOTTOM OF PANELBOARD. DEVICE WILL BE PROVIDED WITH #10 AWG FACTORY LEADS.
B. MOUNT SERVICE ENTRANCE SURGE PROTECTIVE DEVICES TO SIDE OF PANELBOARD.

1PBLN1	1PBLN2

NOTE:
IF THIS DRAWING IS LESS THAN 34" X 22"
IT IS A REDUCED SIZE DRAWING

SYM	DESCRIPTION	DATE	APPR
1	MOD P00005	05/2023	
2	MOD P00006 AND MOD P00007	10/2025	

NAVFAC

NICHOLAS G. ZUBRZYCKI LICENSE No 64299 STATE OF FLORIDA PROFESSIONAL ENGINEER

BAMFORTH ENGINEERS & CONSULTANTS

AE INFO

APPROVED

FOR COMMANDER NAVFAC 11/12/2025

ACTIVITY
Approved by J. Scott Roberts,
Asset Management Branch Head &
Supervisory Facility Planner, PWD
Beaufort, SC via email.

SATISFACTORY TO DATE 12/15/2022

DES	RLW	DRW	RLW	CHK	KLM
PMDM	KTB / RLH				
BRANCH MANAGER	JAS				
CHIEF ENG/ARCH	EJA				
FP ENGINEER	DSN				

DEPARTMENT OF THE NAVY
NAVAL FACILITIES ENGINEERING SYSTEMS COMMAND
DC CORE:
MCAS BEAUFORT

NAVAL FACILITIES ENGINEERING SYSTEMS COMMAND ~ MID-ATLANTIC
NORFOLK, VA

BEAUFORT, SC

P-475 AIRCRAFT MAINTENANCE HANGAR - VOLUME 4 (PARKING GARAGE OPTION)

ELECTRICAL SCHEDULES

SCALE: 12" = 1'-0"
EPROJECT NO.: 1363603
CONSTR. CONTR. NO.
NAVFAC DRAWING NO. 12860410
SHEET 1189 OF 1412

PEP800

DRAWFORM REVISION: 25 AUGUST 2020

Autodesk Docs://2042 NAFAI 320 F35 Maintenance Hangar/2042-F35 maint Hangar_Parking Facility-EL-R17/2024.rvt
11/6/2025 6:44:09 PM

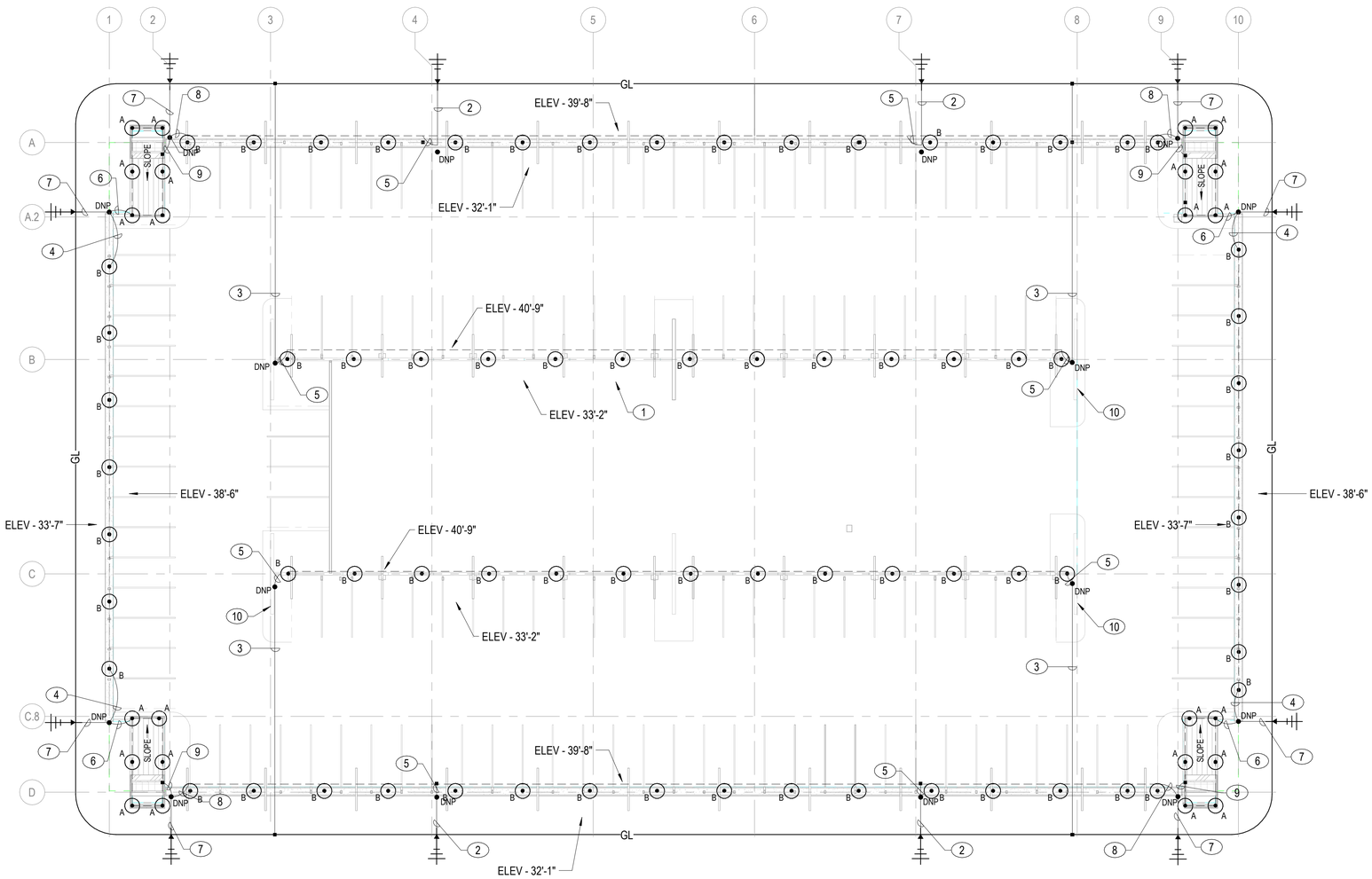

A1 LIGHTNING PROTECTION PLAN
1" = 20'-0"

NOTES:

SHEET NOTES:

A. FURNISH AND INSTALL LIGHTNING PROTECTION SYSTEM IN ACCORDANCE WITH NFPA 780 STANDARDS, AND UL96A.
B. SEE SHEET PEQ501 FOR LIGHTNING PROTECTION SYSTEM DETAILS.
C. ALL CONDUCTORS WILL BE FASTENED AT A MAXIMUM SPACING OF NOT MORE THAN 3 FEET.
D. AIR TERMINAL WILL BE PLACED AT OR WITHIN 2 FEET OF THE ENDS OF EDGES AN CORNER OF ROOF. AIR TERMINALS WILL BE SPACED AT 25 FEET MAXIMUM BETWEEN AIR TERMINALS.
E. PROVIDE UL MASTER LABEL FOR THE LIGHTNING PROTECTION SYSTEM UPON COMPLETE INSTALLATION OF THE LIGHTNING PROTECTION SYSTEM.
F. ALL CONDUITS ROUTED EXPOSED DOWN EXTERIOR WALL WILL BE SCHEDULE 80 PVC.
G. BOND THE REINFORCING STEEL IN THE GARAGE FOUNDATION TO THE GROUND LOOP CONDUCTOR.

KEY NOTES (00)

1 PHOTOVOLTAIC SYSTEM CANOPY. TYPICAL. REFER TO STRUCTURAL DRAWINGS FOR DETAIL.
2 1" SCHEDULE 40 PVC CONDUIT WITH DOWN CONDUCTOR SECURED TO EAST SIDE OF COLUMN EXTERIOR. ROUTE EXPOSED DOWN BUILDING EXTERIOR TO BELOW GRADE AND TURN OUT AND BOND TO THE GROUND LOOP AS INDICATED. PAINT CONDUIT TO MATCH BUILDING EXTERIOR.
3 1" SCHEDULE 40 PVC CONDUIT WITH DOWN CONDUCTOR SECURED TO INTERIOR STRUCTURAL SUPPORT WALL. ROUTE EXPOSED DOWN WALL TO BELOW THE GROUND LEVEL SLAB AND TURN OUT AND BOND TO THE GROUND LOOP AS INDICATED. PAINT EXPOSED CONDUIT TO MATCH WALL.
4 ROUTE CONDUCTOR EXPOSED DOWN CANOPY STRUCTURAL SUPPORT TO THE DOWN CONDUCTOR AT LOWER WALL. BOND LIGHTNING PROTECTION CONDUCTOR TO CANOPY STRUCTURAL SUPPORT.
5 ROUTE CONDUCTOR EXPOSED DOWN CANOPY STRUCTURE TO DOWN CONDUCTOR. BOND THE LIGHTNING PROTECTION CONDUCTOR TO CANOPY STRUCTURE STEEL.
6 ROUTE CONDUCTOR EXPOSED DOWN BUILDING EXTERIOR. CONNECT TO CANOPY STRUCTURE DOWN CONDUCTOR BELOW SAFETY RAIL BOTTOM. BOND DOWN CONDUCTOR TO SAFETY RAIL.
7 1" SCHEDULE 40 PVC CONDUIT WITH DOWN CONDUCTOR. ROUTE EXPOSED DOWN BUILDING EXTERIOR TO BELOW GRADE. TURN OUT AND BOND TO GROUND LOOP AS INDICATED. PAINT CONDUIT TO MATCH BUILDING EXTERIOR COLOR.
8 ROUTE CONDUCTOR EXPOSED DOWN FROM CANOPY TO DOWN CONDUCTOR MOUNTED TO BUILDING EXTERIOR. BOND LIGHTNING PROTECTION CONDUCTOR TO CANOPY STRUCTURAL SUPPORT.
9 ROUTE CONDUCTOR EXPOSED DOWN FROM STAIRWELL ROOF TO DOWN CONDUCTOR MOUNTED TO BUILDING EXTERIOR.
10 STRUCTURAL SUPPORT WALL.

PLAN NORTH N

0 10' 20' 40' 60' 80'
1" = 20' GRAPHIC SCALE

NOTE:
IF THIS DRAWING IS LESS THAN 34" X 22"
IT IS A REDUCED SIZE DRAWING

STM	DESCRIPTION	DATE	APPR
1	MOD P00005	05/2023	
2	MOD P00006 AND MOD P00007	10/2025	

NAVFAC

NICHOLAS G. ZUBRZYCKI LICENSE No 64299 STATE OF FLORIDA PROFESSIONAL ENGINEER

BAMFORTH ENGINEERS & CONTRACTORS

AE INFO

APPROVED
FOR COMMANDER NAVFAC 11/6/2025

ACTIVITY
Approved by J. Scott Roberts, Asset Management Branch Head & Supervisory Facility Planner, PWD Beaufort, SC via email.

SATISFACTORY TO DATE 12/15/2022

DES	RLW	DRW	RLW	CHK	KLM
PMDM					KTB / RLH
BRANCH MANAGER					JAS
CHIEF ENG/ARCH					EJA
FP ENGINEER					DSN

DEPARTMENT OF THE NAVY
NAVAL FACILITIES ENGINEERING SYSTEMS COMMAND
DC CORE
NAVAL FACILITIES ENGINEERING SYSTEMS COMMAND – MID-ATLANTIC NORFOLK, VA
MCAS BEAUFORT
BEAUFORT, SC
P-475 AIRCRAFT MAINTENANCE HANGAR - VOLUME 4 (PARKING GARAGE OPTION)
PARKING GARAGE - LIGHTNING PROTECTION PLAN

SCALE: 1" = 20'-0"
EPROJECT NO.: 1363603
CONSTR. CONTR. NO.
NAVFAC DRAWING NO. 12860411
SHEET 1190 OF 1412

PEQ131

DRAWFORM REVISION: 23 AUGUST 2020

Autodesk Docs://3D242 VMFA1 505 F35 Maintenance Hangar/3D242 F35 Maintenance Hangar-Parking Facility-EL-R17D24.rvt
11/6/2025 6:41:19 PM

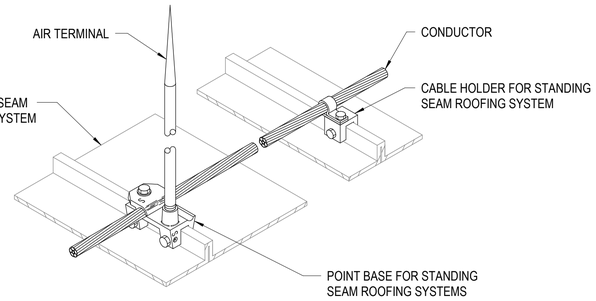

C2 STANDING SEAM AIR TERMINAL - TYPE "A"

NOT TO SCALE

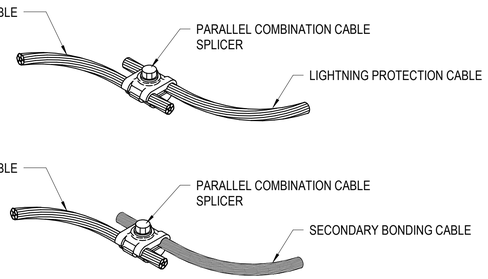

B1 TYPICAL CABLE SPLICERS

NOT TO SCALE

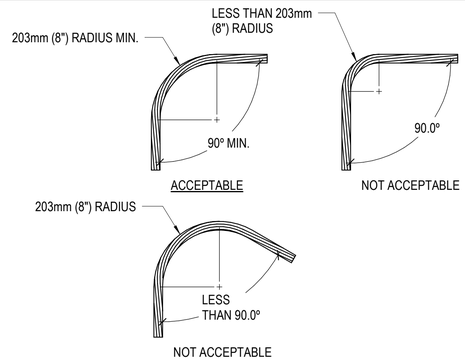

B2 TYPICAL CABLE BEND REQUIREMENTS

NOT TO SCALE

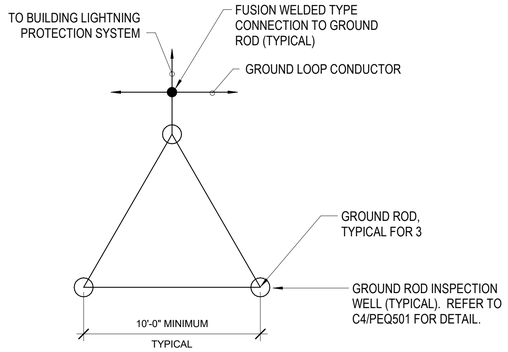

A2 GROUND ROD COUNTERPOISE CONFIGURATION

NOT TO SCALE

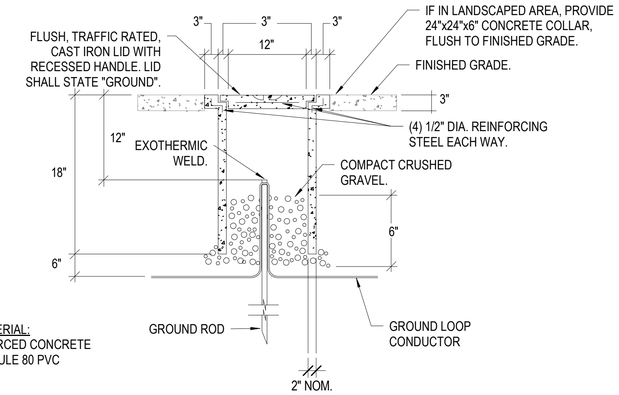

C4 GROUND ROD INSPECTION WELL

NOT TO SCALE

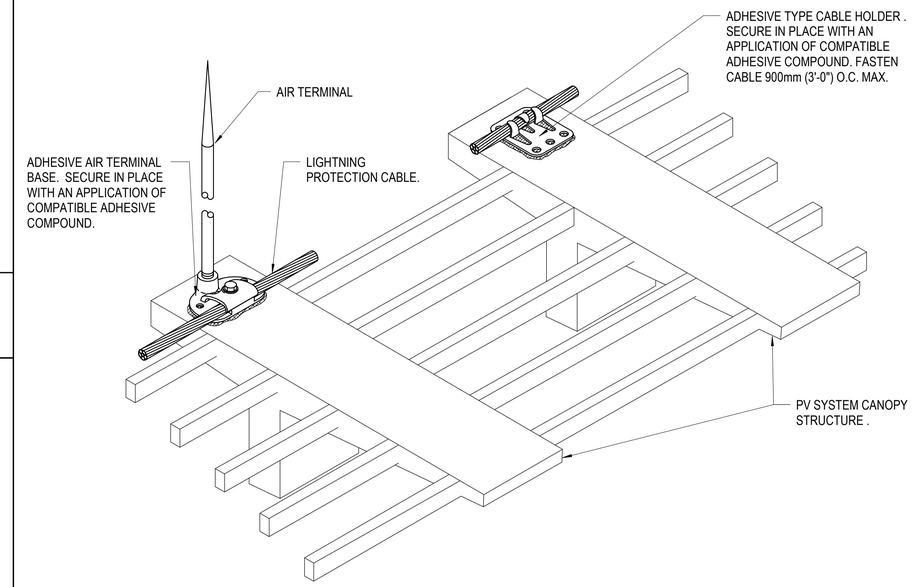

A4 ADHESIVE CANOPY AIR TERMINAL DETAIL, TYPE "B"

NOTE:
IF THIS DRAWING IS LESS THAN 34" X 22"
IT IS A REDUCED SIZE DRAWING

1	MOD P00005	05/2023	
2	MOD P00006 AND MOD P00007	10/2025	

STM DESCRIPTION DATE APPR

NAVFAC

NICHOLAS G. ZUBRZYCKI LICENSE No 64299 STATE OF FLORIDA PROFESSIONAL ENGINEER

BAMFORTH ENGINEERS & ARCHITECTS

A/E INFO

APPROVED

FOR COMMANDER NAVFAC 11/21/2022

ACTIVITY: Approved by J. Scott Roberts, Asset Management Branch Head & Supervisory Facility Planner, PWD Beaufort, SC via email.

SATISFACTORY TO DATE 12/15/2022

DES	RLW	DRW	RLW	CHK	KLM
PM/DM	KTB / RLH				
BRANCH MANAGER	JAS				
CHIEF ENG/ARCH	EJA				
FP ENGINEER	DSN				

DEPARTMENT OF THE NAVY
NAVAL FACILITIES ENGINEERING SYSTEMS COMMAND
DC CORE
NAVAL FACILITIES ENGINEERING SYSTEMS COMMAND – MID-ATLANTIC NORFOLK, VA
MCAS BEAUFORT BEAUFORT, SC
P-475 AIRCRAFT MAINTENANCE HANGAR - VOLUME 4 (PARKING GARAGE OPTION)
LIGHTNING PROTECTION DETAILS

SCALE: As indicated
EPROJECT NO.: 1363603
CONSTR. CONTR. NO.
NAVFAC DRAWING NO. 12860412
SHEET 1191 OF 1412

PEQ501

DRAWFORM REVISION: 25 AUGUST 2020

Autodesk Docs://20450 MFA1 502 F35 Maintenance Hangar/20443 F35 maint Hangar_Parking Facility-EL-R/720241.rvt
11/5/2025 6:44:25 PM