PLUMBING GENERAL NOTES:

1. REFER TO SPECIFICATIONS FOR ALL PIPING CONSTRUCTION AND INSTALLATION REQUIREMENTS.
2. REFER TO TYPICAL DETAIL SHEETS FOR ADDITIONAL VALVING, ACCESSORIES, EQUIPMENT CONNECTIONS, AND ASSEMBLY DETAILS.
3. PIPING LOCATIONS SHOWN ARE SCHEMATIC. REFER TO SPECIFICATIONS FOR SHOP DRAWING AND COORDINATION DRAWING REQUIREMENTS. DO NOT PROCEED WITH INSTALLATION OF PIPING UNTIL APPROVED SHOP DRAWINGS ARE AVAILABLE AT THE SITE.
4. PROVIDE FIRE RATED SLEEVES FOR PIPING PENETRATIONS THROUGH RATED ASSEMBLIES. COORDINATE WITH LIFE SAFETY PLANS. REFER TO TYPICAL PIPE SLEEVE DETAILS.
5. REFER TO DRAWING SECTION ILLUSTRATIONS ON MECHANICAL SHEETS FOR ADDITIONAL PLUMBING PIPING AND EQUIPMENT.
6. PLUMBING PIPING MUST NOT PASS THROUGH ELECTRIC ROOMS, COMMUNICATION ROOMS, SERVER ROOMS, OR ELEVATOR EQUIPMENT ROOMS. ONLY PIPING SERVING EQUIPMENT LOCATED IN AFOREMENTIONED ROOMS MUST BE PERMITTED.
7. DO NOT ROUTE PIPING OVER ELECITRCAL PANELS, SWITCHBOARDS, SWITCHGEAR, TRANSFORMERS, OR SIMILAR ELECTRICAL EQUIPMENT.
8. PROVIDE CLEANOUTS PER IPC, INCLUDING AT BASE OF DRAINAGE STACKS.
9. REFER TO ARCHITECTURAL INTERIOR ELEVATIONS AND FLOOR PLANS FOR LOCATION DIMENSIONS FOR PLACEMENT OF ALL FLOOR DRAINS/TRENCHES. ARCHITECTURAL DEFINED LOCATION DIMENSIONS TAKE PRECEDENCE OVER PLACEMENT DIMENSIONS INDICATED ON ENGINEERING PLANS. VERIFY ALL FIXTURE LOCATION DIMENSIONS PRIOR TO PIPING ROUGH-IN.

PLUMBING SYMBOLS

PIPING

RW	RAINWATER PIPING ABOVE GRADE/SLAB
RW	RAINWATER PIPING BELOW GRADE/SLAB
SRW	SECONDARY RAINWATER PIPING
CD	CONDENSATE WASTE PIPING ABOVE GRADE/SLAB
CD	CONDENSATE WASTE PIPING BELOW GRADE/SLAB

VALVES

SINGLE LINE	DOUBLE LINE	DESIGNATION
		PLUG VALVE
		BALL VALVE
		BUTTERFLY VALVE
		GATE VALVE
		GLOBE VALVE
		PRESSURE REGULATING VALVE/ PRESSURE REDUCING VALVE
		MANUAL BALANCING VALVE
		CHECK VALVE
		STRAINER
		BACKWATER VALVE
		VALVE IN RISER
		HOSE BIBB
		ROOF HYDRANT
		WALL HYDRANT (FREEZEPROOF)
		SAFETY RELIEF VALVE

SPECIALTIES

- HOT WATER MIXING VALVE
- FLOOR SINK
- FLOOR DRAIN
- ROOF DRAIN/AREA DRAIN/DECK DRAIN
- ROOF DRAIN
- HUB DRAIN
- VENT THROUGH ROOF
- FLOW (IN DIRECTION OF ARROW)
- ACTUATING SWITCH
- METER
- SEISMIC BRACING

FITTINGS

- RISER DOWN (ELBOW)
- RISER UP (ELBOW)
- RISE OR DROP
- BRANCH TOP CONNECTION
- BRANCH BOTTOM CONNECTION
- UNION
- CAP
- CLEANOUT
- FLOOR/EXTERIOR CLEANOUT

NOTE:
REFER TO FLOOR PLANS AND DETAILS FOR EXTENT OF SYMBOLS AND ABBREVIATIONS USED.

PLUMBING FIXTURE SCHEDULE

FIXTURE	DESCRIPTION	STORM	REMARKS
DD-1	PARKING DECK DRAIN	10"	
TD-1	PARKING GARAGE TRENCH DRAIN	6"	
TD-2	PARKING GARAGE TRENCH DRAIN	12"	

GENERAL IDENTIFICATION

WH / 1	EQUIPMENT TYPE / SCHEDULE REFERENCE — EQUIPMENT MARK
PDI-A	WATER HAMMER ARRESTER MARK; PLUMBING DRAINAGE INSTITUTE WATER HAMMER ARRESTER SIZE
0.01	RISER CONTINUATION MARK
	POINT OF CONNECTION BETWEEN NEW AND EXISTING CONSTRUCTION
	POINT OF REMOVAL - DEMOLITION
(E)	EXISTING EQUIPMENT/PIPING DESIGNATION

NOTE:
IF THIS DRAWING IS LESS THAN 34" X 22"
IT IS A REDUCED SIZE DRAWING

SYM	DESCRIPTION	DATE	APPR.
1	MOD P00005	05/2023	
2	MOD P00006 AND MOD P00007	10/2025	

NAVFAC

JOHN EDWARD BALL, LICENSE No. 66893, STATE OF FLORIDA, PROFESSIONAL ENGINEER

BAMFORTH ENGINEERS & SURVEYORS

AE INFO

APPROVED
FOR COMMANDER NAVFAC 11/21/2025
ACTIVITY: Approved by J. Scott Roberts, Asset Management Branch Head & Supervisory Facility Planner, PWD Beaufort, SC via email.
SATISFACTORY TO DATE 12/15/2022

DES	CRF	DRW	HES	CHK	DSR
PM/DM	KTB / RLH				
BRANCH MANAGER	ALG				
CHIEF ENGIARCH	EJA				
FP ENGINEER	DSN				

DEPARTMENT OF THE NAVY
NAVAL FACILITIES ENGINEERING SYSTEMS COMMAND
DC-SOWE
NAVAL FACILITIES ENGINEERING SYSTEMS COMMAND – MID-ATLANTIC
NORFOLK, VA
MCAS BEAUFORT
BEAUFORT, SC
P-475 AIRCRAFT MAINTENANCE HANGAR - VOLUME 4 (PARKING GARAGE OPTION)
PLUMBING SYMBOLS AND SCHEDULES

SCALE: NTS
EPROJECT NO.: 1363603
CONSTR. CONTR. NO.
NAVFAC DRAWING NO. 12860375
SHEET 1154 OF 1412

PPP001

DRAWFORM REVISION: 25 AUGUST 2020

Autodesk Docs://20043 MFA T-502 F35 Maintenance Hangar/20043 F35 Maint Hangar_Parking Facility_Pt.-V2024.rvt
11/5/2025 6:24:51 PM

ABBREVIATIONS

ABB	DESCRIPTION	ABB	DESCRIPTION	ABB	DESCRIPTION
AD	AREA DRAIN	FD	FLOOR DRAIN	PV	PLUG VALVE
AFF	ABOVE FINISHED FLOOR	FFE	FINISHED FLOOR ELEVATION	PWB	PLUMBING WALL BOX
ASL	ABOVE SEA LEVEL	FLR	FLOOR	RD	ROOF DRAIN
ART	AIR RECEIVER TANK	FS	FLOOR SINK	REF	REFERENCE
AUTO	AUTOMATIC	GAL	GALLON	REG	REGULATING
BFF	BELOW FINISHED FLOOR	GTV	GATE VALVE	REQD	REQUIRED
BFG	BELOW FINISHED GRADE	GV	GLOBE VALVE	RHY	ROOF HYDRANT
BFP	BACKFLOW PREVENTER	HB	HOSE BIBB	RPM	REVOLUTIONS PER MINUTE
BSMT	BASEMENT	HD	HUB DRAIN	RW	RAINWATER
BTUH	BRITISH THERMAL UNITS PER HOUR	INV	INVERT	SD	SITE DRAIN
BV	BALL VALVE	I.E.	INVERT ELEVATION	SQ	SQUARE
BWV	BACKWATER VALVE	IPC	INTERNATIONAL PLUMBING CODE	SRW	SECONDARY RAINWATER
CD	CONDENSATE WASTE	IW	INDUSTRIAL WASTE	SRD	SECONDARY ROOF DRAIN
CFM	CUBIC FEET PER MINUTE	JS	JANITOR'S SINK	TEMP	TEMPERATURE
CFH	CUBIC FEET PER HOUR	LVL	LEVEL	TYP	TYPICAL
CO	CLEANOUT	MAX	MAXIMUM	W/	WITH
CONN	CONNECTION	MIN	MINIMUM	WCO	WALL CLEANOUT
CONT	CONTINUATION	MX	MIXING VALVE	WHY	WALL HYDRANT
CV	CHECK VALVE	(N.C.)	NORMALLY CLOSED	WM	WATER METER
DN	DOWN	(N.O.)	NORMALLY OPEN	YHY	YARD HYDRANT
DWG	DRAWING	NPT	NATIONAL PIPE THREAD		
EA	EACH	PDI	PLUMBING DRAINAGE INSTITUTE		
ECO	EXTERIOR CLEANOUT	PRESS	PRESSURE		
ELEC	ELECTRIC	PRV	PRESSURE REDUCING VALVE		
ELEV	ELEVATION	PSI	POUNDS PER SQUARE INCH		
FCO	FLOOR CLEANOUT	PSIG	POUNDS PER SQUARE INCH GAGE		

NOTE:
REFER TO FLOOR PLANS AND DETAILS FOR EXTENT OF SYMBOLS AND ABBREVIATIONS USED.

NOTE:
IF THIS DRAWING IS LESS THAN 34" X 22"
IT IS A REDUCED SIZE DRAWING

SYM	DESCRIPTION	DATE	APPR.
1	MOD P00005	05/2023	
2	MOD P00006 AND MOD P00007	10/2025	

NAVFAC

JOHN EDWARD BALL
LICENSE
No. 66893
STATE OF FLORIDA
PROFESSIONAL ENGINEER
SEAL

BAMFORTH
ENGINEERS & SURVEYORS
AE INFO

APPROVED
FOR COMMANDER NAVFAC 11/21/2025

ACTIVITY
Approved by J. Scott Roberts,
Asset Management Branch Head &
Supervisory Facility Planner, PWD
Beaufort, SC via email.

SATISFACTORY TO DATE 12/15/2022

DES CRF	DRW HES	CHK DSR	
PM/DM		KTB / RLH	
BRANCH MANAGER		ALG	
CHIEF ENG/ARCH		EJA	
FP ENGINEER		DSN	

DEPARTMENT OF THE NAVY
DC CORE
NAVAL FACILITIES ENGINEERING SYSTEMS COMMAND
NAVAL FACILITIES ENGINEERING SYSTEMS COMMAND – MID-ATLANTIC
1510FOLK VA
MCAS BEAUFORT
BEAUFORT, SC
P-475 AIRCRAFT MAINTENANCE HANGAR - VOLUME 4 (PARKING GARAGE OPTION)
PLUMBING ABBREVIATIONS

SCALE: NTS
EPROJECT NO.: 1363603
CONSTR. CONTR. NO.
NAVFAC DRAWING NO. 12860376
SHEET 1155 OF 1412

PPP002

DRAWFORM REVISION: 25 AUGUST 2020

Autodesk Docs://2024 LNI AT 502 FS6 Maintenance Hangar/2024 FS6 Maint Hangar - Parking Facility_PL v22024.rvt
11/6/2025 6:24:51 PM

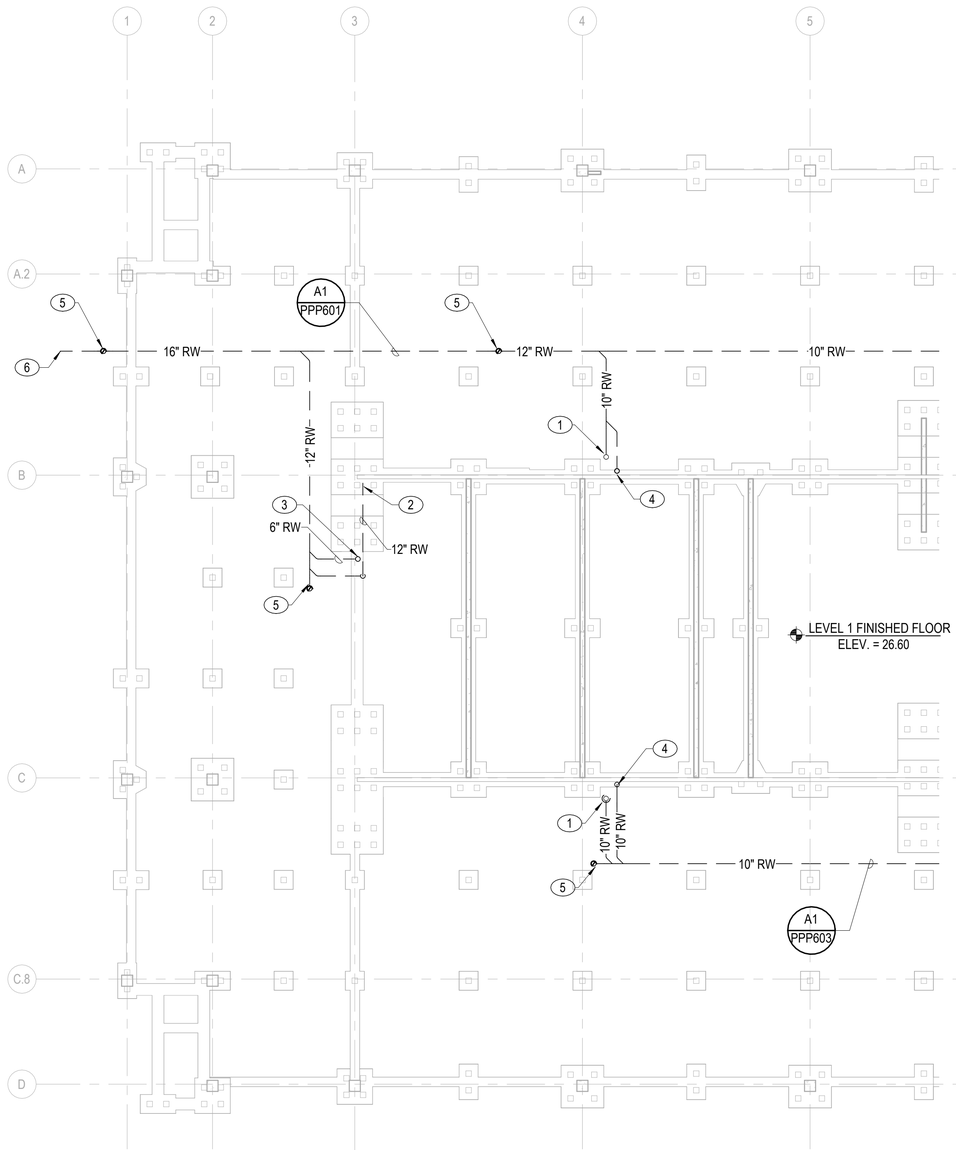

A1 UNDERGROUND PLUMBING PLAN - SECTOR A
1/16" = 1'-0"

NOTES:

KEY NOTES (00)

1. 10" RW UP TO GROUND FLOOR DECK DRAIN.
2. 10" RW UP TO UPPER FLOOR.
3. 6" RW UP TO GROUND FLOOR TRENCH DRAIN.
4. 10" RW UP TO UPPER FLOOR.
5. 6" RW UP TO CLEANOUT.
6. 16" RW BELOW GRADE. I.E. = 23.10'. REFER TO CIVIL DRAWINGS FOR CONTINUATION.

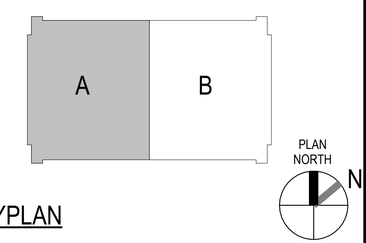

KEYPLAN

0 10' 20' 40' 60'
1/16" = 1'-0" GRAPHIC SCALE

NOTE:
IF THIS DRAWING IS LESS THAN 34" X 22"
IT IS A REDUCED SIZE DRAWING

SYM	DESCRIPTION	DATE	APPR.
1	MOD P00005	05/2023	
2	MOD P00006 AND MOD P00007	10/2025	

NAVFAC

JOHN EDWARD BALL
LICENSE
No. 66893
STATE OF FLORIDA
PROFESSIONAL ENGINEER
SEAL

BAMFORTH
ENGINEERS & SURVEYORS
A/E INFO

APPROVED
FOR COMMANDER NAVFAC 11/21/2025

ACTIVITY
Approved by J. Scott Roberts,
Asset Management Branch Head &
Supervisory Facility Planner, PWD
Beaufort, SC via email.

SATISFACTORY TO DATE 12/15/2022

DES	CRF	DRW	HES	CHK	DSR
PM/DM	KTB / RLH				
BRANCH MANAGER	ALG				
CHIEF ENG/ARCH	EJA				
FP ENGINEER	DSN				

NAVAL FACILITIES ENGINEERING SYSTEMS COMMAND
NORFOLK, VA
NAVAL FACILITIES ENGINEERING SYSTEMS COMMAND – MID-ATLANTIC
DEPARTMENT OF THE NAVY
DC-CORE
MCAS BEAUFORT
BEAUFORT, SC
P-475 AIRCRAFT MAINTENANCE HANGAR - VOLUME 4 (PARKING GARAGE OPTION)
PARKING GARAGE - PLUMBING PLAN - SECTOR A

SCALE: 1/16" = 1'-0"
EPROJECT NO.: 1363603
CONSTR. CONTR. NO.
NAVFAC DRAWING NO. 12860377
SHEET 1156 OF 1412

PPP100A

DRAWFORM REVISION: 25 AUGUST 2020

Autodesk Docs://20042 NAF A1 502 F35 Maintenance Hangar/20042 F35 Maint Hangar_Parking Facility_PL-V2024.rvt
11/5/2025 6:24:42 PM

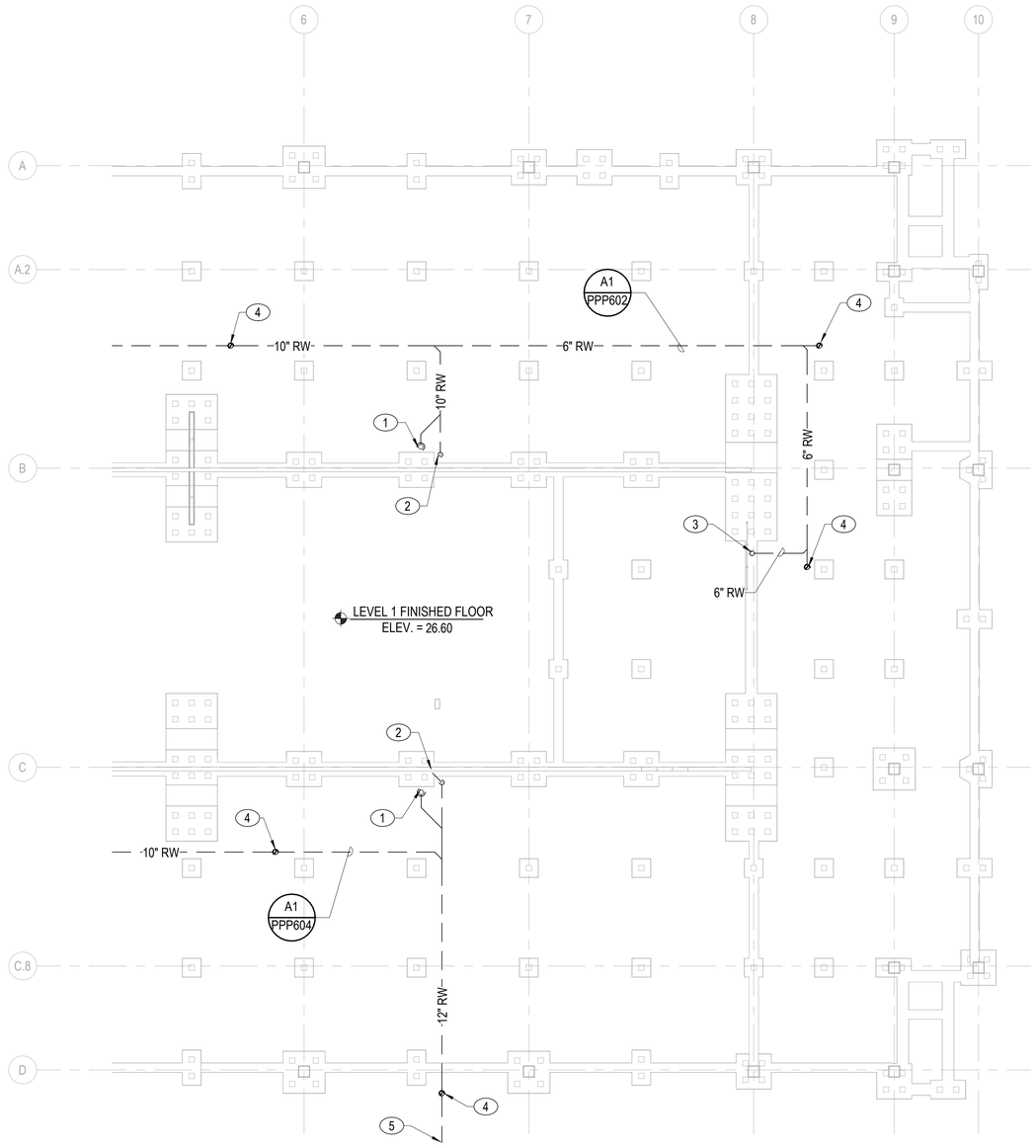

A1 UNDERGROUND PLUMBING PLAN - SECTOR B
1/16" = 1'-0"

NOTES:

KEY NOTES (00)

1. 10" RW UP TO GROUND FLOOR DECK DRAIN.
2. 10" RW UP TO SECOND FLOOR.
3. 6" RW UP TO GROUND FLOOR TRENCH DRAIN.
4. 6" RW UP TO CLEANOUT.
5. 12" RW BELOW GRADE. I.E. = 23.10'. REFER TO CIVIL DRAWINGS FOR CONTINUATION.

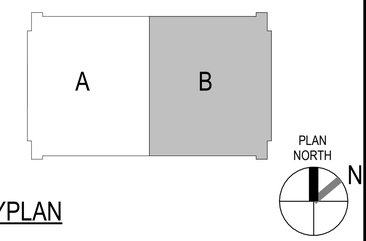

KEYPLAN

0 10' 20' 40' 60'
1/16" = 1'-0" GRAPHIC SCALE

NOTE:
IF THIS DRAWING IS LESS THAN 34" X 22"
IT IS A REDUCED SIZE DRAWING

SYM	DESCRIPTION	DATE	APPR.
1	MOD P00005	05/2023	
2	MOD P00006 AND MOD P00007	10/2025	

NAVFAC

JOHN EDWARD BALL
LICENSE
No. 66893
STATE OF FLORIDA
PROFESSIONAL ENGINEER
SEAL

BAMFORTH
ENGINEERS & SURVEYORS
A/E INFO

APPROVED
FOR COMMANDER NAVFAC 11/21/2025

ACTIVITY
Approved by J. Scott Roberts,
Asset Management Branch Head &
Supervisory Facility Planner, PWD
Beaufort, SC via email.

SATISFACTORY TO DATE 12/15/2022

DES	CRF	DRW	HES	CHK	DSR

PM/DM KTB / RLH
BRANCH MANAGER ALG
CHIEF ENG/ARCH EJA
FP ENGINEER DSN

NAVAL FACILITIES ENGINEERING SYSTEMS COMMAND
1500 QUAY, K.VA.
DEPARTMENT OF THE NAVY
NAVAL FACILITIES ENGINEERING SYSTEMS COMMAND - MID-ATLANTIC
DC-CORE
MCAS BEAUFORT
BEAUFORT, SC
P-475 AIRCRAFT MAINTENANCE HANGAR - VOLUME 4 (PARKING GARAGE OPTION)
PARKING GARAGE - PLUMBING PLAN - SECTOR B

SCALE: 1/16" = 1'-0"
EPROJECT NO.: 1363603
CONSTR. CONTR. NO.
NAVFAC DRAWING NO. 12860378
SHEET 1157 OF 1412

PPP100B

DRAWFORM REVISION: 25 AUGUST 2020

Autodesk Docs://20042 MAF AT 502 F35 Maintenance Hangar/20042 F35 Maint Hangar - Parking Facility_PL v22024.rvt
11/6/2025 6:24:53 PM

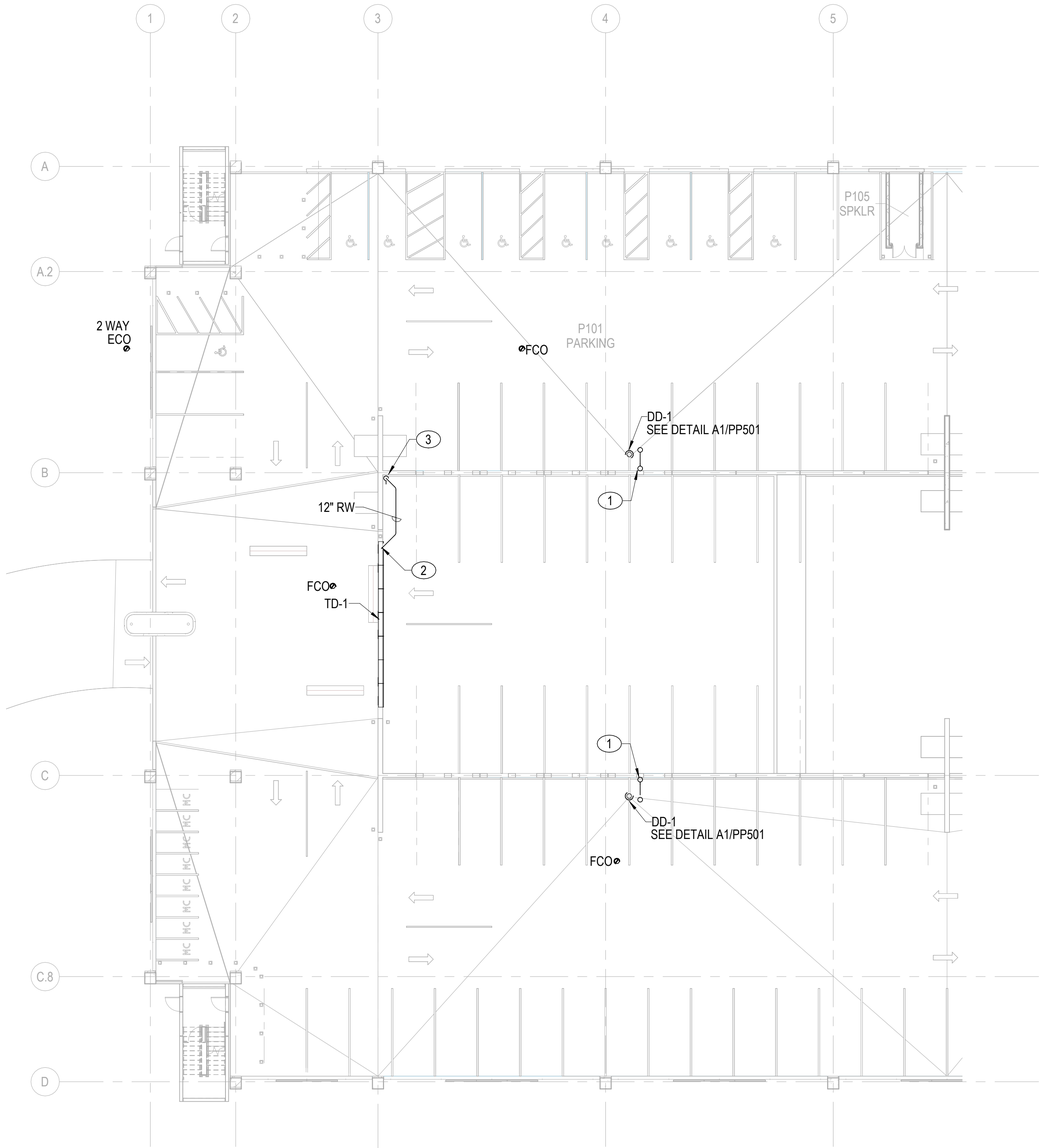

A1 PLUMBING PLAN - GROUND FLOOR - SECTOR A

1/16" = 1'-0"

NOTES:

KEY NOTES (00)

1. 10" RW UP TO UPPER FLOOR.
2. 12" RW UP TO SECOND FLOOR TRENCH DRAIN.
3. 12" RW DOWN TO BELOW SLAB.

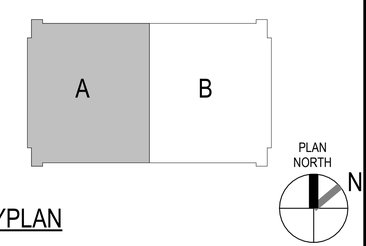

KEYPLAN

0 10' 20' 40' 60'

1/16" = 1'-0" GRAPHIC SCALE

NOTE:
IF THIS DRAWING IS LESS THAN 34" X 22"
IT IS A REDUCED SIZE DRAWING

SYM	DESCRIPTION	DATE	APPR.
1	MOD P00005	05/2023	
2	MOD P00006 AND MOD P00007	10/2025	

NAVFAC

JOHN EDWARD BALL
LICENSE
No. 66893
STATE OF FLORIDA
PROFESSIONAL ENGINEER
SEAL

BAMFORTH
ENGINEERS & SURVEYORS
A/E INFO

APPROVED
FOR COMMANDER NAVFAC 11/21/2025

ACTIVITY
Approved by J. Scott Roberts,
Asset Management Branch Head &
Supervisory Facility Planner, PWD
Beaufort, SC via email.

SATISFACTORY TO DATE 12/15/2022

DES	CRF	DRW	HES	CHK	DSR
PM/DM	KTB / RLH				
BRANCH MANAGER	ALG				
CHIEF ENG/ARCH	EJA				
FP ENGINEER	DSN				

NAVAL FACILITIES ENGINEERING SYSTEMS COMMAND
NAVFAC K.V.A.
DEPARTMENT OF THE NAVY
NAVAL FACILITIES ENGINEERING SYSTEMS COMMAND - MID-ATLANTIC
DC-CORE
MCAS BEAUFORT
BEAUFORT, SC
P-475 AIRCRAFT MAINTENANCE HANGAR - VOLUME 4 (PARKING GARAGE OPTION)
PARKING GARAGE - PLUMBING PLAN - GROUND FLOOR - SECTOR A

SCALE: 1/16" = 1'-0"
EPROJECT NO.: 1363603
CONSTR. CONTR. NO.
NAVFAC DRAWING NO. 12860379
SHEET 1158 OF 1412

PPP101A

DRAWFORM REVISION: 25 AUGUST 2020

Autodesk Docs://20042 MEAT 502 FS8 Maintenance Hangar/20042 FS8 Maint Hangar - Parking Facility_PL v22024.rvt
11/6/2025 6:24:53 PM

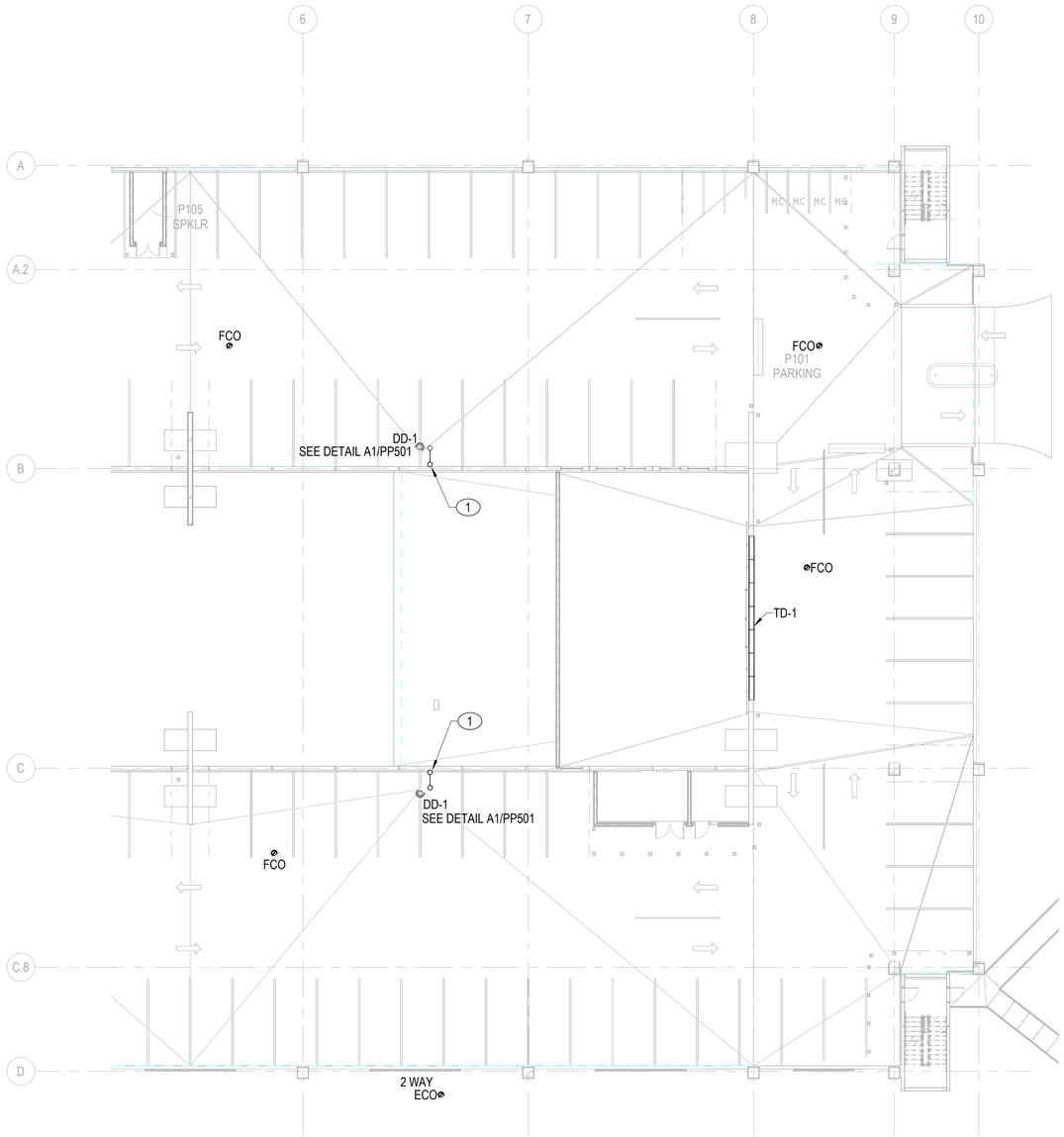

A1 PLUMBING PLAN - GROUND FLOOR - SECTOR B

1/16" = 1'-0"

NOTES:

KEY NOTES (00)

1. 10" RW UP TO UPPER FLOOR.

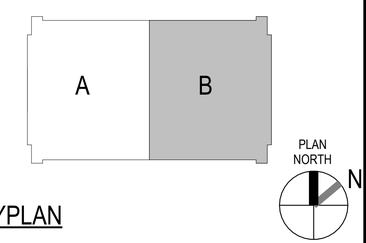

KEYPLAN

0 10' 20' 40' 60'

1/16" = 1'-0" GRAPHIC SCALE

NOTE:
IF THIS DRAWING IS LESS THAN 34" X 22"
IT IS A REDUCED SIZE DRAWING

SYM	DESCRIPTION	DATE	APPR.
1	MOD P00005	05/2023	
2	MOD P00006 AND MOD P00007	10/2025	

NAVFAC

JOHN EDWARD BALL
LICENSE
No. 66893
STATE OF FLORIDA
PROFESSIONAL ENGINEER
SEAL

BAMFORTH
ENGINEERS & SURVEYORS
A/E INFO

APPROVED
FOR COMMANDER NAVFAC 11/21/2025

ACTIVITY: Approved by J. Scott Roberts, Asset Management Branch Head & Supervisory Facility Planner, PWD Beaufort, SC via email.

SATISFACTORY TO DATE	12/15/2022
DES CRF / DRW HES / CHK DSR	
PM/DM	KTB / RLH
BRANCH MANAGER	ALG
CHIEF ENG/ARCH	EJA
FP ENGINEER	DSN

DEPARTMENT OF THE NAVY
DC CORE
NAVAL FACILITIES ENGINEERING SYSTEMS COMMAND
NAVAL FACILITIES ENGINEERING SYSTEMS COMMAND - MID-ATLANTIC
NORFOLK, VA
MCAS BEAUFORT
BEAUFORT, SC
P-475 AIRCRAFT MAINTENANCE HANGAR - VOLUME 4 (PARKING GARAGE OPTION)
PARKING GARAGE - PLUMBING PLAN - GROUND FLOOR - SECTOR B

SCALE: 1/16" = 1'-0"
EPROJECT NO.: 1363603
CONSTR. CONTR. NO.
NAVFAC DRAWING NO. 12860380
SHEET 1159 OF 1412

PPP101B

DRAWFORM REVISION: 25 AUGUST 2020

Autodesk Docs://P0042 VMFA1 503 F35 Maintenance Hangar/P0042 F35 Maint Hangar_Parking Facility_PL-V2024.rvt
11/6/2025 6:24:54 PM

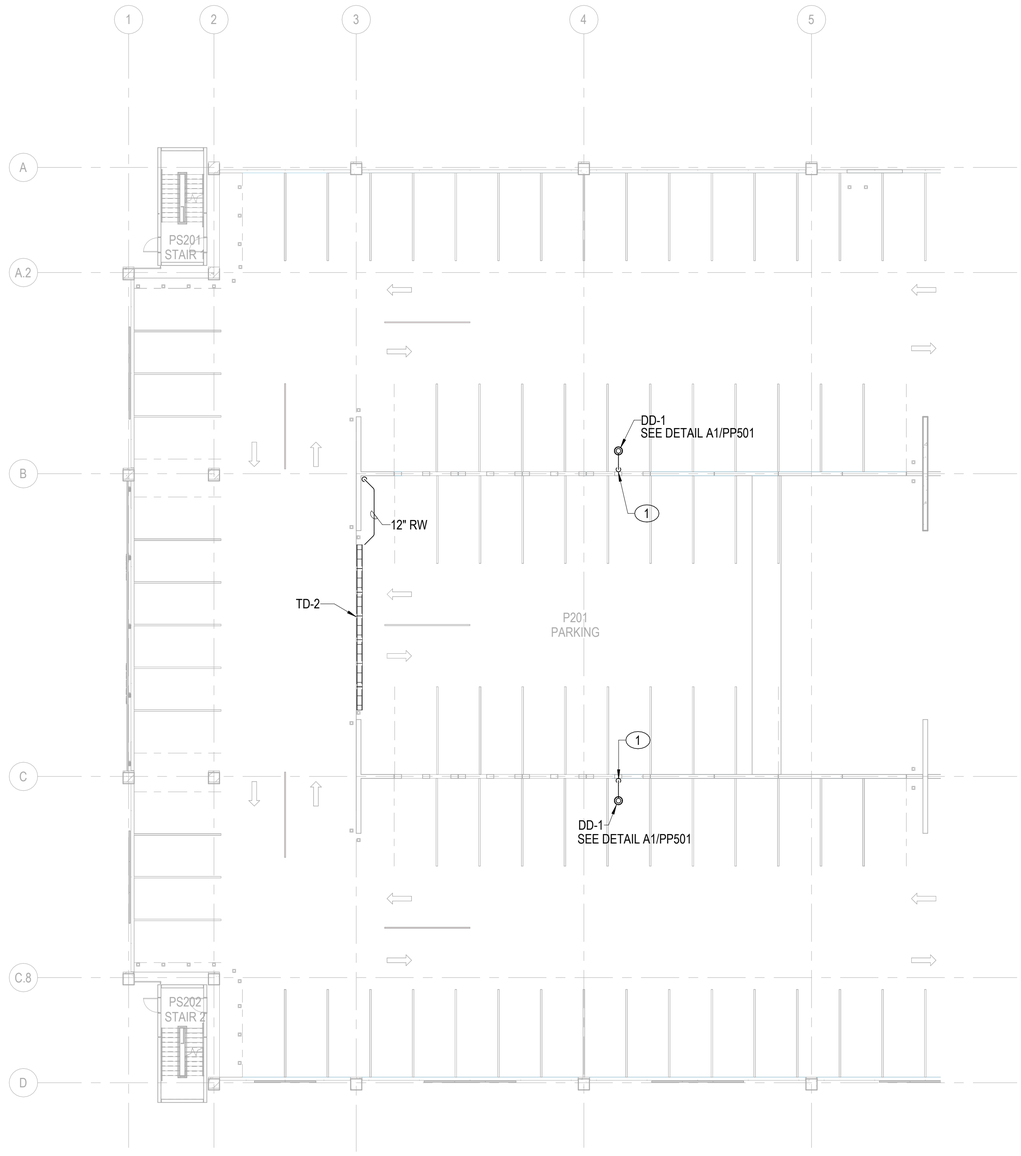

A1 PLUMBING PLAN - SECOND FLOOR - SECTOR A

1/16" = 1'-0"

NOTES:

KEY NOTES (00)

1. 10" RW DOWN TO GROUND FLOOR.

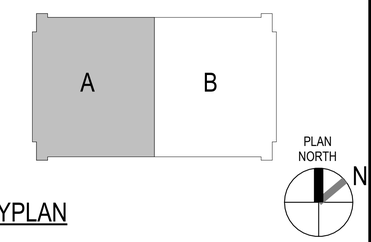

KEYPLAN

0 10' 20' 40' 60'

1/16" = 1'-0" GRAPHIC SCALE

NOTE:
IF THIS DRAWING IS LESS THAN 34" X 22"
IT IS A REDUCED SIZE DRAWING

SYM	DESCRIPTION	DATE	APPR.
1	MOD P00005	05/2023	
2	MOD P00006 AND MOD P00007	10/2025	

NAVFAC

JOHN EDWARD BALL
LICENSE
No. 66893
STATE OF FLORIDA
PROFESSIONAL ENGINEER
SEAL

BAMFORTH
ENGINEERS & SURVEYORS
A/E INFO

APPROVED
FOR COMMANDER NAVFAC 11/21/2025

ACTIVITY
Approved by J. Scott Roberts,
Asset Management Branch Head &
Supervisory Facility Planner, PWD
Beaufort, SC via email.

SATISFACTORY TO DATE 12/15/2022

DES	CRF	DRW	HES	CHK	DSR
PM/DM	KTB / RLH				
BRANCH MANAGER	ALG				
CHIEF ENG/ARCH	EJA				
FP ENGINEER	DSN				

NAVAL FACILITIES ENGINEERING SYSTEMS COMMAND
1510 GILBERT ST. NORFOLK, VA.

DEPARTMENT OF THE NAVY
NAVAL FACILITIES ENGINEERING SYSTEMS COMMAND – MID-ATLANTIC
DC-CORE

MCAS BEAUFORT
BEAUFORT, SC

P-475 AIRCRAFT MAINTENANCE HANGAR - VOLUME 4 (PARKING GARAGE OPTION)

PARKING GARAGE - PLUMBING PLAN - SECOND FLOOR - SECTOR A

SCALE: 1/16" = 1'-0"
EPROJECT NO.: 1363603
CONSTR. CONTR. NO.
NAVFAC DRAWING NO. 12860381
SHEET 1160 OF 1412

PPP111A

DRAWFORM REVISION: 25 AUGUST 2020

Autodesk Docs://20042 NAFAT 502 FS8 Maintenance Hangar/20042 FS8 Maintenance Hangar_Parking Facility_PL v22024.rvt
11/6/2025 6:24:56 PM

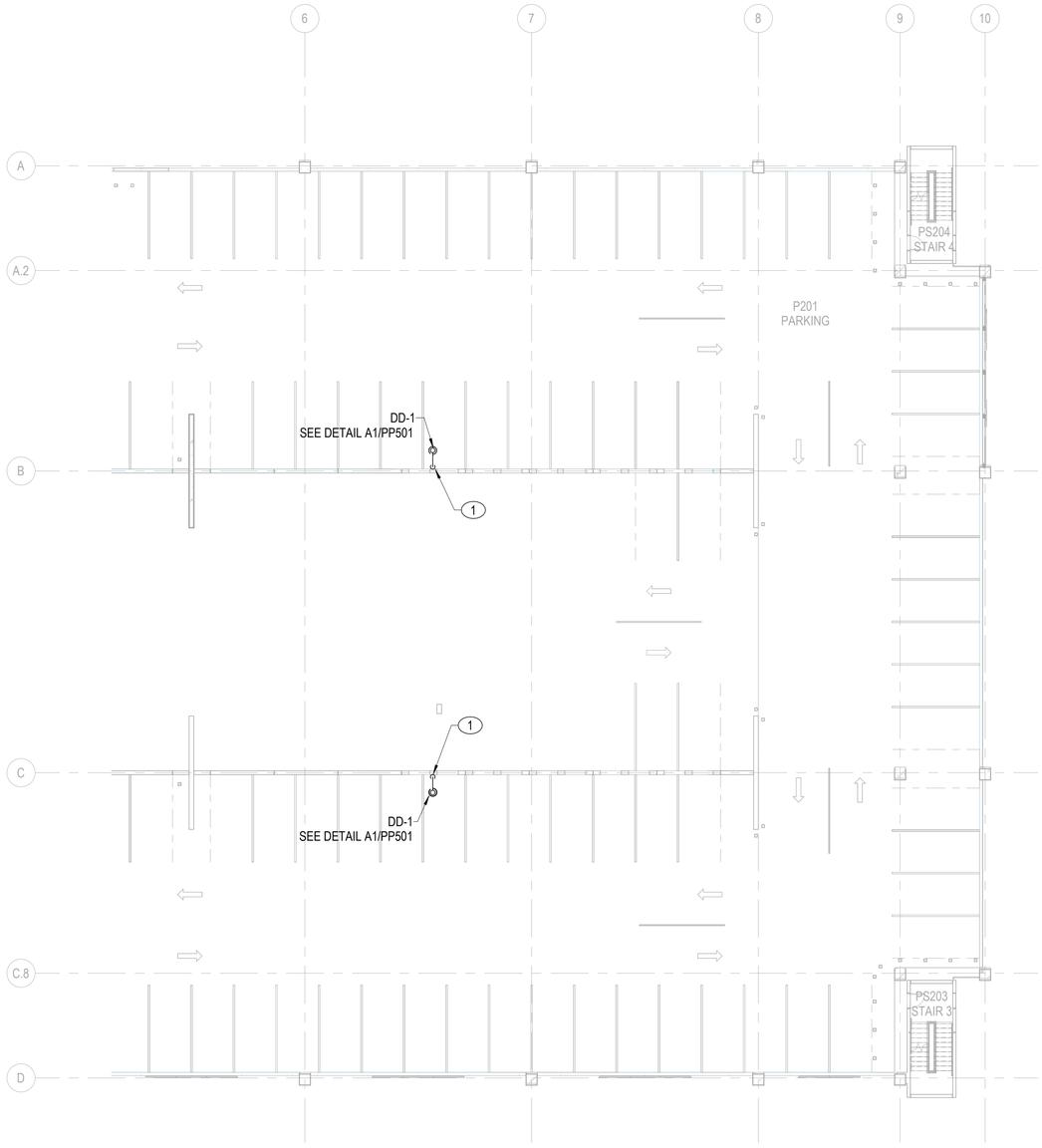

A1 PLUMBING PLAN - SECOND FLOOR - SECTOR B

1/16" = 1'-0"

NOTES:

KEY NOTES (00)

1. 10" RW DOWN TO GROUND FLOOR.

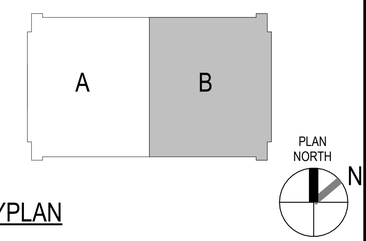

KEYPLAN

0 10' 20' 40' 60'

1/16" = 1'-0" GRAPHIC SCALE

NOTE:
IF THIS DRAWING IS LESS THAN 34" X 22"
IT IS A REDUCED SIZE DRAWING

SYM	DESCRIPTION	DATE	APPR.
1	MOD P00005	05/2023	
2	MOD P00006 AND MOD P00007	10/2025	

NAVFAC

JOHN EDWARD BALL
LICENSE
No. 66893
STATE OF FLORIDA
PROFESSIONAL ENGINEER
SEAL

BAMFORTH
ENGINEERS & SURVEYORS
A/E INFO

APPROVED
FOR COMMANDER NAVFAC 11/21/2025

ACTIVITY
Approved by J. Scott Roberts,
Asset Management Branch Head &
Supervisory Facility Planner, PWD
Beaufort, SC via email.

SATISFACTORY TO DATE	12/15/2022
DES CRF / DRW HES / CHK DSR	
PM/DM	KTB / RLH
BRANCH MANAGER	ALG
CHIEF ENG/ARCH	EJA
FP ENGINEER	DSN

NAVAL FACILITIES ENGINEERING SYSTEMS COMMAND
1510 GILBERT ST. NORFOLK, VA.

DEPARTMENT OF THE NAVY
NAVAL FACILITIES ENGINEERING SYSTEMS COMMAND – MID-ATLANTIC
DC-CORE
MCAS BEAUFORT
BEAUFORT, SC
P-475 AIRCRAFT MAINTENANCE HANGAR - VOLUME 4 (PARKING GARAGE OPTION)
PARKING GARAGE - PLUMBING PLAN - SECOND FLOOR - SECTOR B

SCALE:	1/16" = 1'-0"
EPROJECT NO.:	1363603
CONSTR. CONTR. NO.	
NAVFAC DRAWING NO.	12860382
SHEET	1161 OF 1412

PPP111B

DRAWFORM REVISION: 25 AUGUST 2020

Autodesk Docs://20042 NAFAT 502 FS Maintenance Hangar/20042 FS Maint Hangar - Parking Facility_PL v22024.rvt
11/6/2025 6:24:56 PM

NOTES:

KEY NOTES (00)

1. 10" RW DOWN TO GROUND FLOOR.

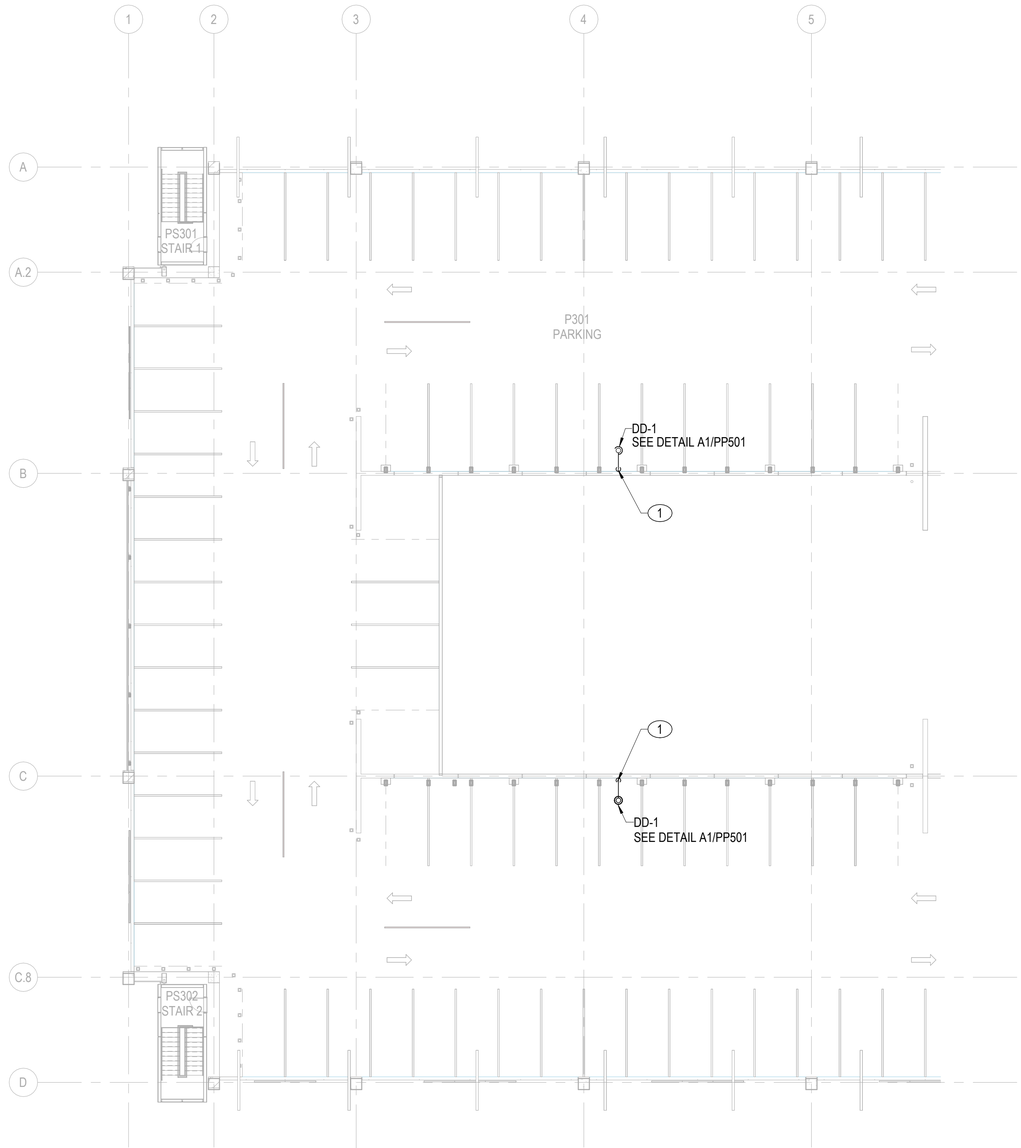

A1 PLUMBING PLAN - THIRD FLOOR - SECTOR A

1/16" = 1'-0"

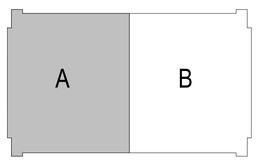

KEYPLAN

PLAN NORTH

N

0 10' 20' 40' 60'

1/16" = 1'-0" GRAPHIC SCALE

NOTE:
IF THIS DRAWING IS LESS THAN 34" X 22"
IT IS A REDUCED SIZE DRAWING

SYM	DESCRIPTION	DATE	APPR.
1	MOD P00005	05/2023	
2	MOD P00006 AND MOD P00007	10/2025	

NAVFAC

JOHN EDWARD BALL
LICENSE
No. 66893
STATE OF FLORIDA
PROFESSIONAL ENGINEER
SEAL

BAMFORTH
ENGINEERS & SURVEYORS
A/E INFO

APPROVED

FOR COMMANDER NAVFAC 11/21/2025

ACTIVITY: Approved by J. Scott Roberts, Asset Management Branch Head & Supervisory Facility Planner, PWD Beaufort, SC via email.

SATISFACTORY TO DATE 12/15/2022

DES	CRF	DRW	HES	CHK	DSR
PM/DM	KTB / RLH				
BRANCH MANAGER	ALG				
CHIEF ENG/ARCH	EJA				
FP ENGINEER	DSN				

DEPARTMENT OF THE NAVY
NAVAL FACILITIES ENGINEERING SYSTEMS COMMAND
DC-CORE

NAVAL FACILITIES ENGINEERING SYSTEMS COMMAND – MID-ATLANTIC
NORFOLK, VA

MCAS BEAUFORT
BEAUFORT, SC

P-475 AIRCRAFT MAINTENANCE HANGAR - VOLUME 4 (PARKING GARAGE OPTION)

PARKING GARAGE - PLUMBING PLAN - THIRD FLOOR - SECTOR A

SCALE: 1/16" = 1'-0"

EPROJECT NO.: 1363603

CONSTR. CONTR. NO.

NAVFAC DRAWING NO. 12860383

SHEET 1162 OF 1412

PPP121A

DRAWFORM REVISION: 25 AUGUST 2020

Autodesk Docs://2024-2 MAF AT 502 F35 Maintenance Hangar/2024-2 F35 Maint Hangar - Parking Facility_Pu v2024.rvt
11/6/2025 6:24:37 PM

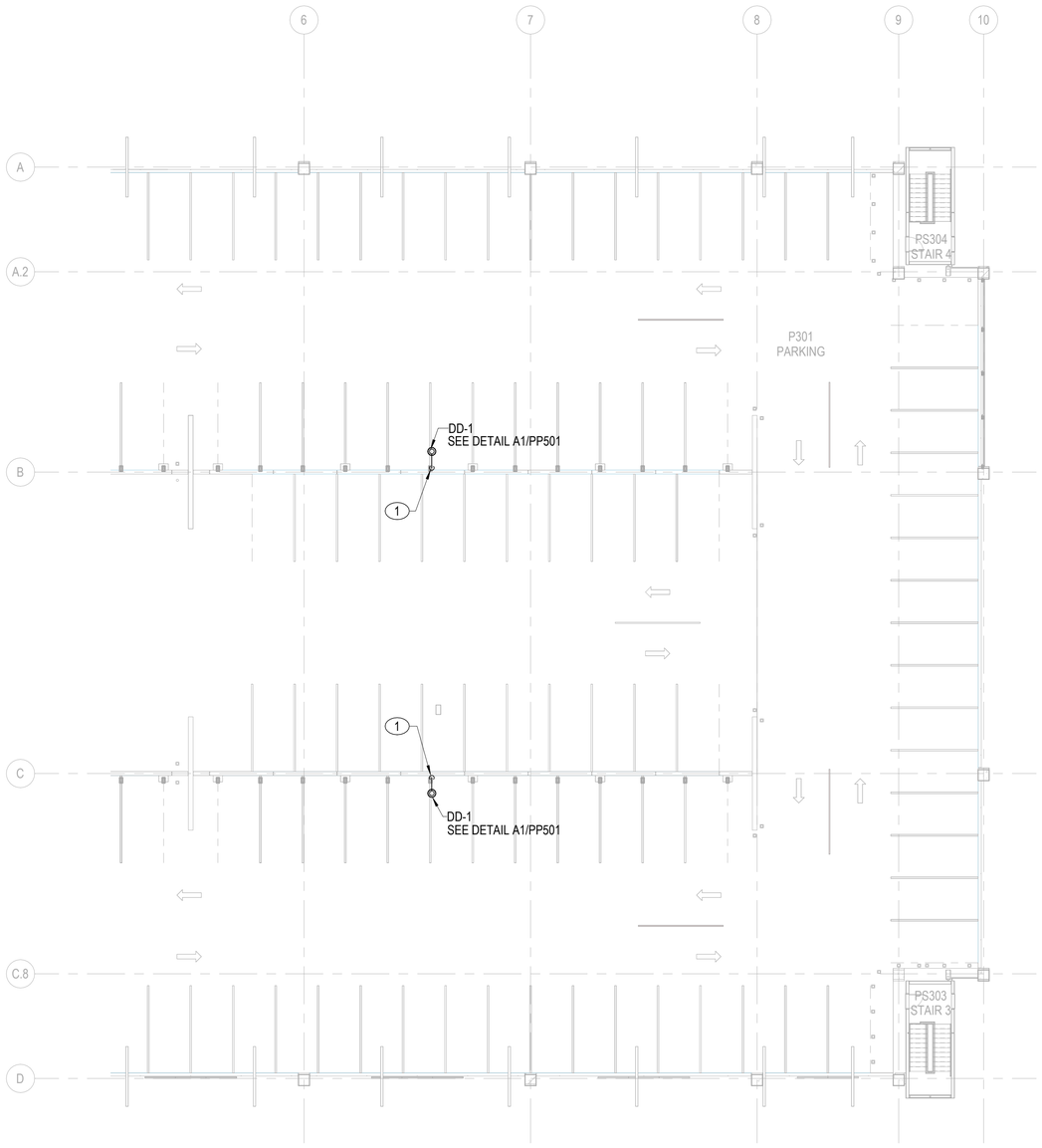

A1 PLUMBING PLAN - THIRD FLOOR - SECTOR B

1/16" = 1'-0"

NOTES:

KEY NOTES (00)

1. 10" RW DOWN TO GROUND FLOOR.

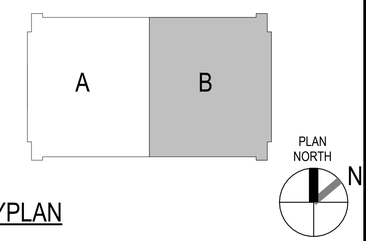

KEYPLAN

0 10' 20' 40' 60'

1/16" = 1'-0" GRAPHIC SCALE

NOTE:
IF THIS DRAWING IS LESS THAN 34" X 22"
IT IS A REDUCED SIZE DRAWING

SYM	DESCRIPTION	DATE	APPR.
1	MOD P00005	05/2023	
2	MOD P00006 AND MOD P00007	10/2025	

NAVFAC

JOHN EDWARD BALL
LICENSE
No. 66893
STATE OF FLORIDA
PROFESSIONAL ENGINEER
03.13.25
SEAL

BAMFORTH
ENGINEERS & SURVEYORS
A/E INFO

APPROVED
FOR COMMANDER NAVFAC 11/21/2025

ACTIVITY
Approved by J. Scott Roberts,
Asset Management Branch Head &
Supervisory Facility Planner, PWD
Beaufort, SC via email.

SATISFACTORY TO DATE	12/15/2022		
DES CRF	DRW HES	CHK DSR	
PM/DM	KTB / RLH		
BRANCH MANAGER	ALG		
CHIEF ENG/ARCH	EJA		
FP ENGINEER	DSN		

DEPARTMENT OF THE NAVY
DC CORE
NAVAL FACILITIES ENGINEERING SYSTEMS COMMAND
MCAS BEAUFORT

NAVAL FACILITIES ENGINEERING SYSTEMS COMMAND – MID-ATLANTIC
NORFOLK, VA

BEAUFORT, SC

P-475 AIRCRAFT MAINTENANCE HANGAR - VOLUME 4 (PARKING GARAGE OPTION)

PARKING GARAGE - PLUMBING PLAN - THIRD FLOOR - SECTOR B

SCALE:	1/16" = 1'-0"
EPROJECT NO.:	1363603
CONSTR. CONTR. NO.	
NAVFAC DRAWING NO.	12860384
SHEET	1163 OF 1412

PPP121B

DRAWFORM REVISION: 25 AUGUST 2020

Autodesk Docs://20242 VAF AT 502 FS8 Maintenance Hangar/20242 FS8 Maintenance Hangar_Parking Facility_PL v22024.rvt
11/6/2025 6:24:58 PM

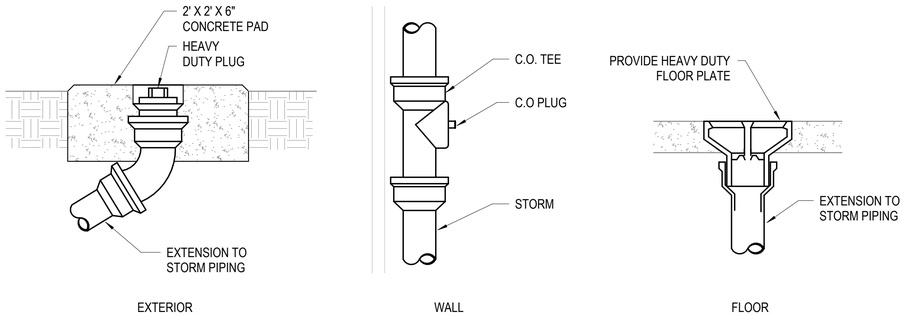

C1 CLEANOUT DETAIL

NOT TO SCALE

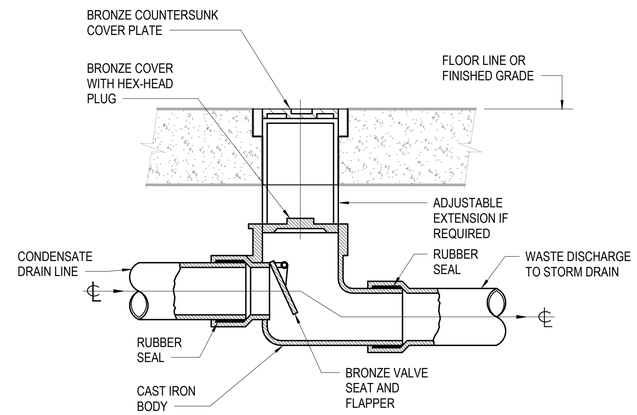

C3 BACKWATER VALVE DETAIL

NOT TO SCALE

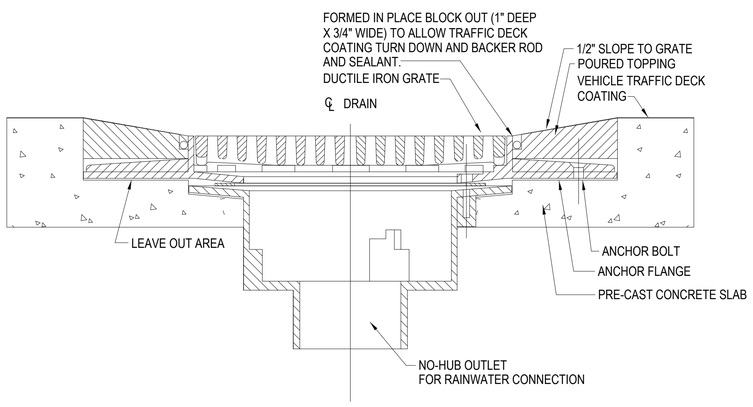

A1 PARKING GARAGE ROOF / AREA DRAIN DETAIL

NOT TO SCALE

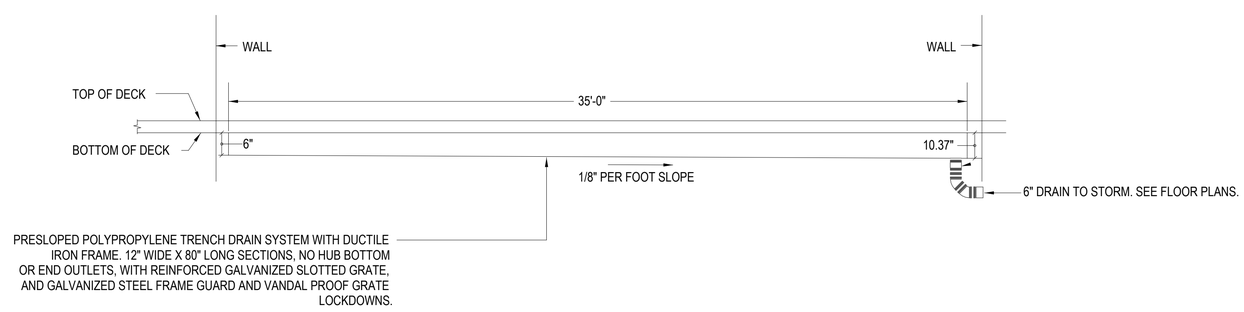

A3 TRENCH DRAIN DETAIL

NOT TO SCALE

NOTE:
IF THIS DRAWING IS LESS THAN 34" X 22"
IT IS A REDUCED SIZE DRAWING

SYM	DESCRIPTION	DATE	APPR.
1	MOD P00005	05/2023	
2	MOD P00006 AND MOD P00007	10/2025	

NAVFAC

JOHN EDWARD BALL
LICENSE
No. 66893
STATE OF FLORIDA
PROFESSIONAL ENGINEER
SEAL

BAMFORTH
ENGINEERING & SURVEYING
A/E INFO

APPROVED
FOR COMMANDER NAVFAC 11/21/2025

ACTIVITY
Approved by J. Scott Roberts,
Asset Management Branch Head &
Supervisory Facility Planner, PWD
Beaufort, SC via email.

SATISFACTORY TO DATE	12/15/2022		
DES CRF	DRW HES	CHK DSR	
PM/DM	KTB / RLH		
BRANCH MANAGER	ALG		
CHIEF ENG/ARCH	EJA		
FP ENGINEER	DSN		

DEPARTMENT OF THE NAVY
NAVAL FACILITIES ENGINEERING SYSTEMS COMMAND
DC-CORE
NAVAL FACILITIES ENGINEERING SYSTEMS COMMAND – MID-ATLANTIC
1510 GILBERT ST, NORFOLK, VA
MCAS BEAUFORT
BEAUFORT, SC
P-475 AIRCRAFT MAINTENANCE HANGAR - VOLUME 4 (PARKING GARAGE OPTION)
PLUMBING DETAILS

SCALE: NOT TO SCALE
EPROJECT NO.: 1363603
CONSTR. CONTR. NO.
NAVFAC DRAWING NO. 12860385
SHEET 1164 OF 1412

PPP501

DRAWFORM REVISION: 25 AUGUST 2020

Autodesk Docs://20042 MAFAT 502 FS8 Maintenance Hangar/20042 FS8 Maintenance Hangar_Parking Facility_PL v22024.rvt
11/6/2025 6:24:58 PM

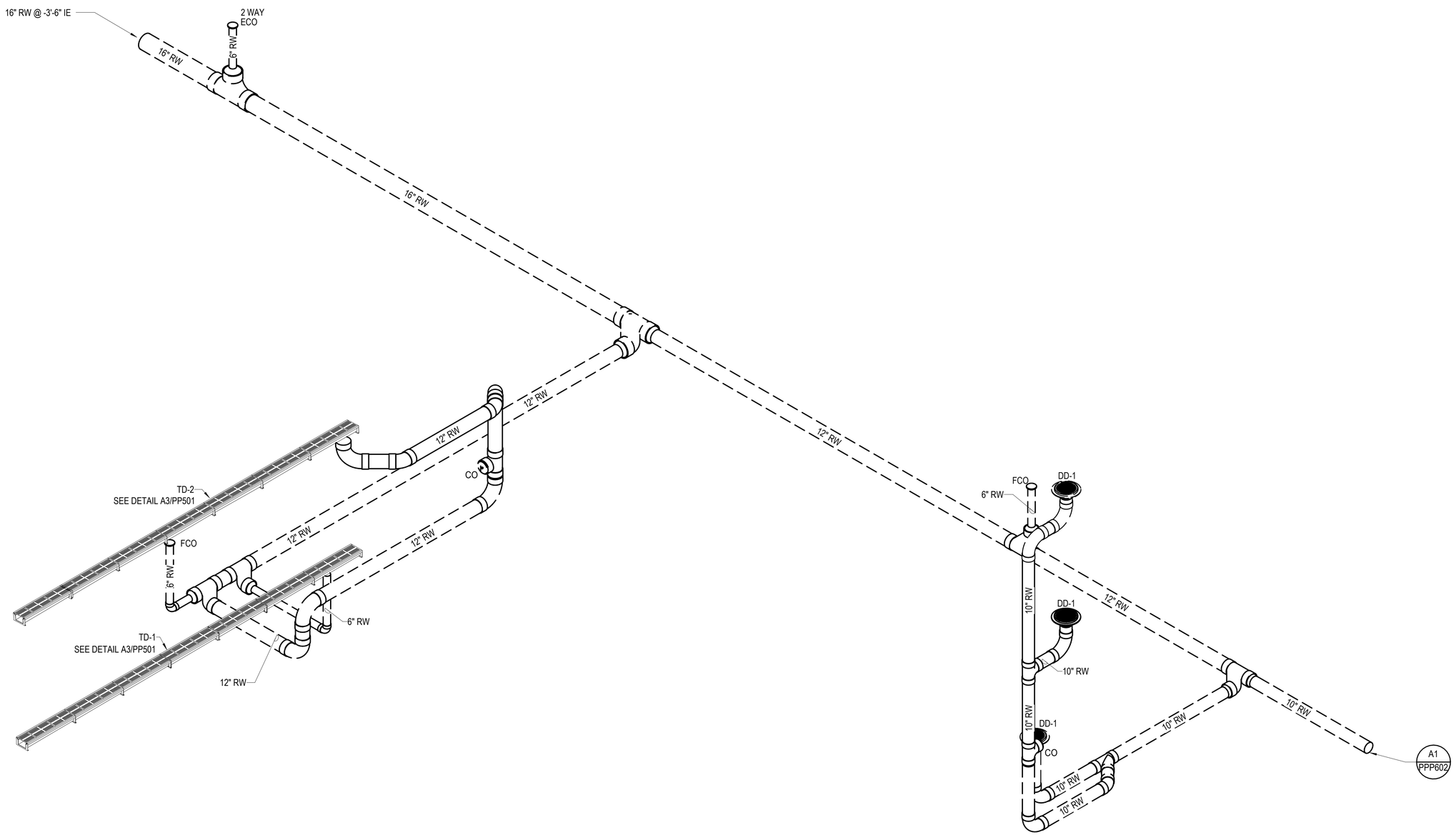

A1 RAINWATER RISER DIAGRAM
NOT TO SCALE

NOTE:
IF THIS DRAWING IS LESS THAN 34" X 22"
IT IS A REDUCED SIZE DRAWING

SYM	DESCRIPTION	DATE	APPR.
1	MOD P00005	05/2023	
2	MOD P00006 AND MOD P00007	10/2025	

NAVFAC

JOHN EDWARD BALL
LICENSE
No. 66893
STATE OF FLORIDA
PROFESSIONAL ENGINEER
SEAL

BAMFORTH
ENGINEERS + SURVEYOR
A/E INFO

APPROVED
FOR COMMANDER NAVFAC 11/21/2025

ACTIVITY
Approved by J. Scott Roberts,
Asset Management Branch Head &
Supervisory Facility Planner, PWD
Beaufort, SC via email.

SATISFACTORY TO DATE	12/15/2022
DES CRF DRW HES CHK DSR	
PM/DM	KTB / RLH
BRANCH MANAGER	ALG
CHIEF ENG/ARCH	EJA
FP ENGINEER	DSN

DEPARTMENT OF THE NAVY
NAVAL FACILITIES ENGINEERING SYSTEMS COMMAND
DC CORE
NAVAL FACILITIES ENGINEERING SYSTEMS COMMAND - MID-ATLANTIC
NORFOLK, VA
MCAS BEAUFORT
BEAUFORT, SC
P-475 AIRCRAFT MAINTENANCE HANGAR - VOLUME 4 (PARKING GARAGE OPTION)
RAINWATER RISER DIAGRAM

SCALE:	
EPROJECT NO.:	1363603
CONSTR. CONTR. NO.	
NAVFAC DRAWING NO.	12860386
SHEET	1165 OF 1412

PPP601

DRAWFORM REVISION: 25 AUGUST 2020

Autodesk Docs://20042 NAVFAC MAF FS/ P-475 Maintenance Hangar/20042 FS5 Main Hangar_Parking Facility_R1-V2024.rvt
11/05/2025 6:24:59 PM

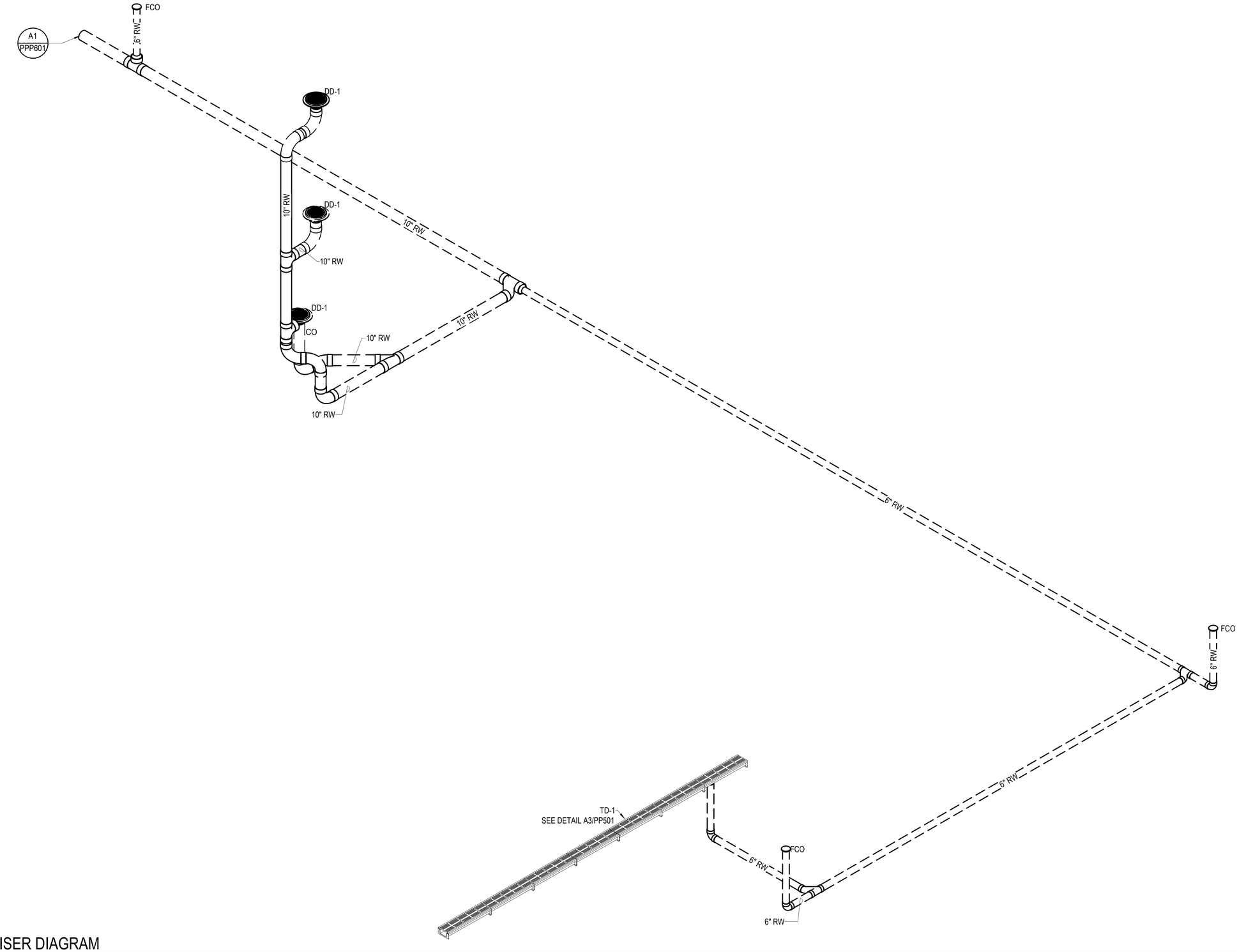

1 RAINWATER RISER DIAGRAM

NOT TO SCALE

NOTE:
IF THIS DRAWING IS LESS THAN 34" X 22"
IT IS A REDUCED SIZE DRAWING

SYM	DESCRIPTION	DATE	APPR.
1	MOD P00005	05/2023	
2	MOD P00006 AND MOD P00007	10/2025	

NAVFAC

JOHN EDWARD BALL
LICENSE
No. 66893
STATE OF FLORIDA
PROFESSIONAL ENGINEER
SEAL

BAMFORTH
ENGINEERS SURVEYORS
A/E INFO

APPROVED
FOR COMMANDER NAVFAC 11/21/2025

ACTIVITY
Approved by J. Scott Roberts,
Asset Management Branch Head &
Supervisory Facility Planner, PWD
Beaufort, SC via email.

SATISFACTORY TO DATE			12/15/2022
DES CRF	DRW HES	CHK DSR	
PM/DM			KTB / RLH
BRANCH MANAGER			ALG
CHIEF ENG/ARCH			EJA
FP ENGINEER			DSN

DEPARTMENT OF THE NAVY
NAVAL FACILITIES ENGINEERING SYSTEMS COMMAND
DC-CORE
NAVAL FACILITIES ENGINEERING SYSTEMS COMMAND - MID-ATLANTIC
NORFOLK, VA
MCAS BEAUFORT
BEAUFORT, SC
P-475 AIRCRAFT MAINTENANCE HANGAR - VOLUME 4 (PARKING GARAGE OPTION)
RAINWATER RISER DIAGRAM

SCALE:
EPROJECT NO.: 1363603
CONSTR. CONTR. NO.
NAVFAC DRAWING NO. 12860387
SHEET 1166 OF 1412

PPP602

DRAWFORM REVISION: 25 AUGUST 2020

Autodesk Docs://20043 NAFAT 502 F35 Maintenance Hangar/20043 F35 Maint Hangar_Parking Facility_PL-V2024.rvt
11/5/2025 6:24:09 PM

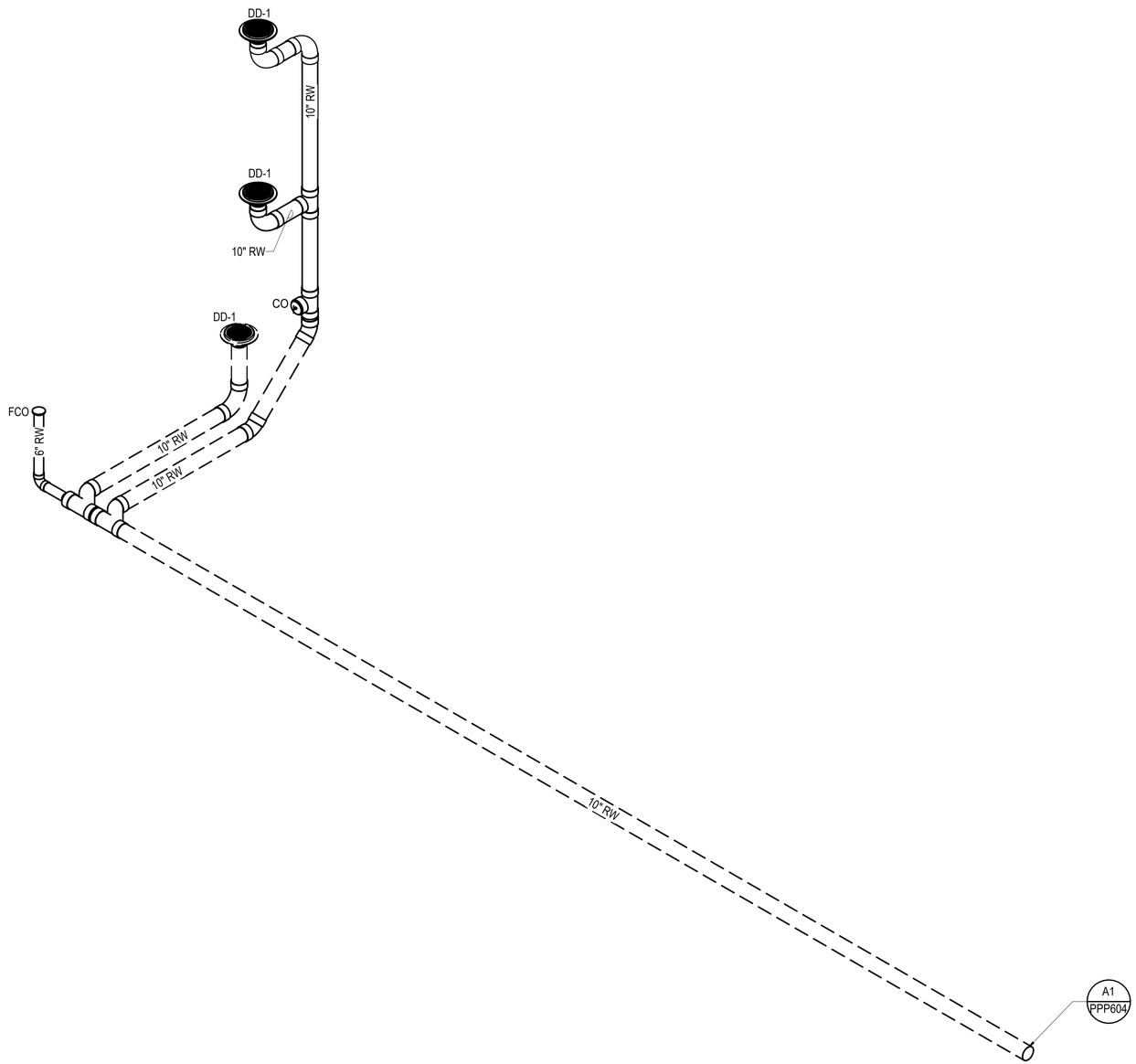

A1 RAINWATER RISER DIAGRAM
NOT TO SCALE

NOTE:
IF THIS DRAWING IS LESS THAN 34" X 22"
IT IS A REDUCED SIZE DRAWING

SYM	DESCRIPTION	DATE	APPR
1	MOD P00005	05/2023	
2	MOD P00006 AND MOD P00007	10/2025	

NAVFAC

JOHN EDWARD BALL
LICENSE
No. 66893
STATE OF FLORIDA
PROFESSIONAL ENGINEER
SEAL

BAMFORTH
ENGINEERS & SURVEYORS
A/E INFO

APPROVED
FOR COMMANDER NAVFAC 11/21/2025

ACTIVITY
Approved by J. Scott Roberts,
Asset Management Branch Head &
Supervisory Facility Planner, PWD
Beaufort, SC via email.

SATISFACTORY TO DATE	12/15/2022
DES CRF / DRW HES / CHK DSR	
PM/DM	KTB / RLH
BRANCH MANAGER	ALG
CHIEF ENG/ARCH	EJA
FP ENGINEER	DSN

DEPARTMENT OF THE NAVY
NAVAL FACILITIES ENGINEERING SYSTEMS COMMAND
DC-CORE
MCAS BEAUFORT
NAVFAC NAVFAC LVA
NAVAL FACILITIES ENGINEERING SYSTEMS COMMAND – MID-ATLANTIC
BEAUFORT, SC
P-475 AIRCRAFT MAINTENANCE HANGAR - VOLUME 4 (PARKING GARAGE OPTION)
RAINWATER RISER DIAGRAM

SCALE:
EPROJECT NO.: 1363603
CONSTR. CONTR. NO.
NAVFAC DRAWING NO. 12860388
SHEET 1167 OF 1412

PPP603

DRAWFORM REVISION: 25 AUGUST 2020

Autodesk Docs://20042 WIFAT 500 FS Maintenance Hangar/20042 FS Maint Hangar_Parking Facility_PL v2024.rvt
11/5/2025 6:25:00 PM

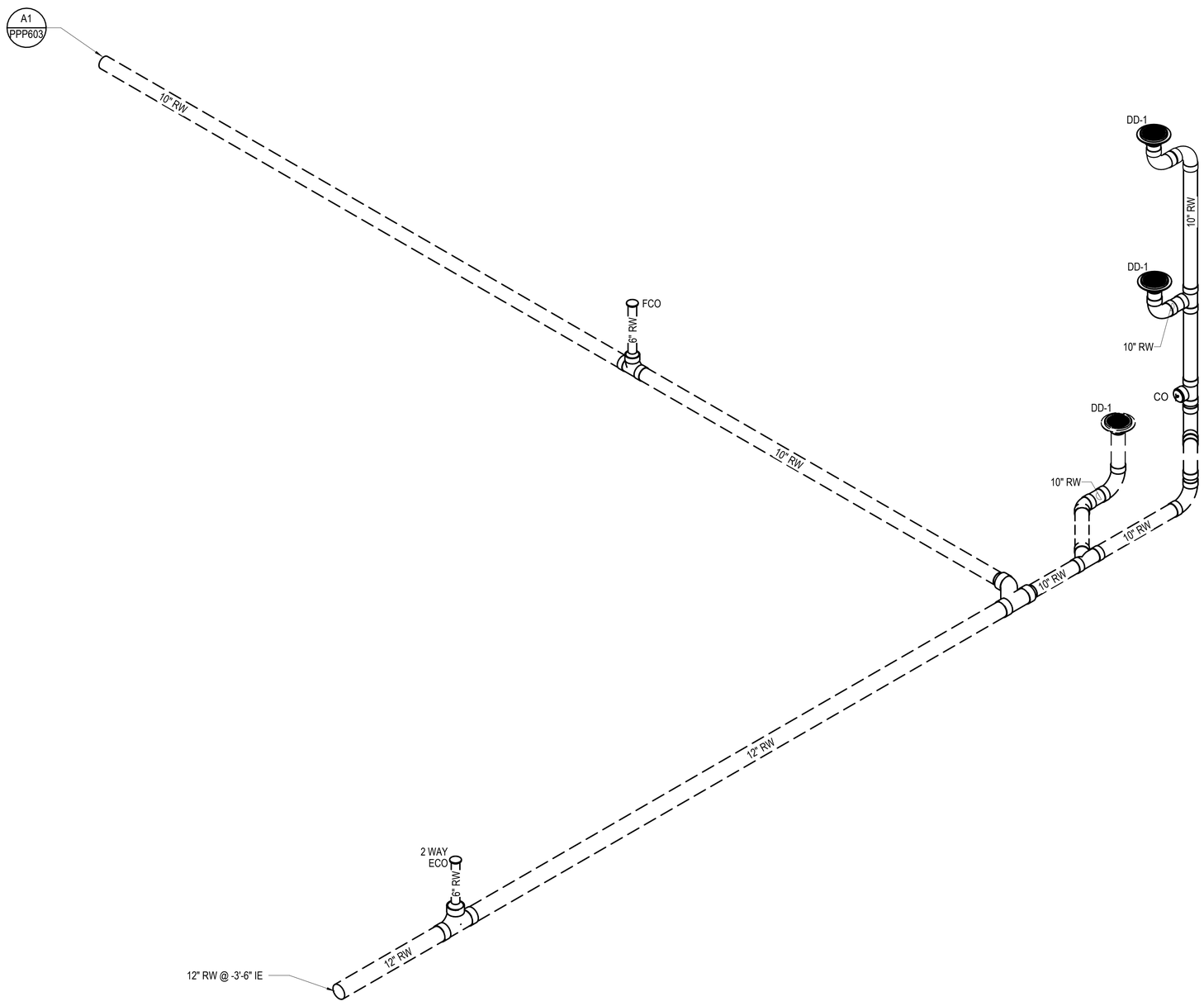

A1 RAINWATER RISER DIAGRAM

NOT TO SCALE

NOTE:
IF THIS DRAWING IS LESS THAN 34" X 22"
IT IS A REDUCED SIZE DRAWING

SYM	DESCRIPTION	DATE	APPR.
1	MOD P00005	05/2023	
2	MOD P00006 AND MOD P00007	10/2025	

NAVFAC

JOHN EDWARD BALL
LICENSE
No. 66893
STATE OF FLORIDA
PROFESSIONAL ENGINEER

SEAL

BAMFORTH
ENGINEERS & SURVEYORS

A/E INFO

APPROVED

FOR COMMANDER NAVFAC 11/21/2025

ACTIVITY: Approved by J. Scott Roberts, Asset Management Branch Head & Supervisory Facility Planner, PWD Beaufort, SC via email.

SATISFACTORY TO DATE 12/15/2022

DES	CRF	DRW	HES	CHK	DSR
PM/DM	KTB / RLH				
BRANCH MANAGER	ALG				
CHIEF ENGIARCH	EJA				
FP ENGINEER	DSN				

DEPARTMENT OF THE NAVY
NAVAL FACILITIES ENGINEERING SYSTEMS COMMAND
DC-CORE

NAVAL FACILITIES ENGINEERING SYSTEMS COMMAND
NGPSCAL VIA
MID-ATLANTIC

MCAS BEAUFORT
BEAUFORT, SC

P-475 AIRCRAFT MAINTENANCE HANGAR - VOLUME 4 (PARKING GARAGE OPTION)

RAINWATER RISER DIAGRAM

SCALE:

EPROJECT NO.: 1363603

CONSTR. CONTR. NO.

NAVFAC DRAWING NO. 12860389

SHEET 1168 OF 1412

PPP604

DRAWFORM REVISION: 25 AUGUST 2020

Autodesk Docs://20043 MFA T-502 F35 Maintenance Hangar/20043 F35 Maint Hangar_Parking Facility_PL-V2024.rvt
11/5/2025 6:25:00 PM