HVAC	DESIGNATION
AAV	AUTOMATIC AIR VALVE
AC	AIR CONDITIONING, AIR COMPRESSOR
ACU	AIR CONDITIONING UNIT
AD	ACCESS DOOR, AIR DRYER, AREA DRAIN
AFG	ABOVE FINISHED GRADE
AHU	AIR HANDLING UNIT
AP	ACCESS PANEL
AS	AIR SEPARATOR
AST	ABOVE-GROUND STORAGE TANK
ATC	AUTOMATIC TEMPERATURE CONTROL
ATU	AIR TERMINAL UNIT
AUTO	AUTOMATIC
B	BOILER
BDD	BACK DRAFT DAMPER
BC	BUILDING CONTROLLER
BP	BACKFLOW PREVENTER
BV	BALANCING VALVE
C	CELSIUS, DEGREE CELSIUS
CAC	COMPUTER ROOM AIR CONDITIONER
CAP	CAPACITY
CB	CATCH BASIN
CD	CEILING DIFFUSER
CDWR	CONDENSER WATER PUMP
CENT	CENTRIFUGAL
CEP	CENTRAL ENERGY PLANT
CGA	COMPRESSED GAS ASSOCIATION
CH	CHILLER
CHW	CHILLED WATER
CI	CAST IRON
CO	CLEAN OUT
CONN	CONNECTION
CPU	CONDENSATE PUMP UNIT
CSW	COLD SOFT WATER
CT	COOLING TOWER
CU	CONDENSING UNIT
CW	COLD WATER / CONDENSER WATER
CWR	CONDENSER WATER RETURN
CWS	CONDENSER WATER SUPPLY
DA	DENTAL AIR
DB	DRY BULB
DC	DIGITAL CONTROLLER
DD	DIRECT DRIVE, DECK DRAIN
DDC	DIRECT DIGITAL CONTROL
DEG	DEGREE
DG	DOOR GRILLE
DH	DUCT HEATER
DW	DOMESTIC WATER (PLUMBING)
DWG	DRAWING
DWV	DRAIN, WASTE AND VENT PIPING
EA	EXHAUST AIR
EAT	ENTERING AIR TEMPERATURE
ECD	ELECTRIC CONTROL DAMPER
EF	EXHAUST FAN
EFF	EFFICIENCY
ELEC	ELECTRIC
ELEV	ELEVATION
ENCL	ENCLOSE (ENCLOSURE)
ENT	ENTERING
ER	EXHAUST REGISTER
ESP	EXTERNAL STATIC PRESSURE
ET	EXPANSION TANK

HVAC	DESIGNATION
EWT	ENTERING WATER TEMPERATURE
EXH	EXHAUST
F	FIRE SPRINKLER
FA	FIRE ALARM
FCO	FLOOR CLEAN OUT
FCU	FAN COIL UNIT
FD	FIRE DAMPER, FLOOR DRAIN
FFE	FINISHED FLOOR ELEVATION
FL	FLOOR(ING)
FM	FLOW METER
FMS	FLOW MEASURING STATION
FO	FLAT OVAL
FS	FLOOR SINK
F/SD	FIRE/SMOKE DAMPER
FV	FLUSH VALVE
FW	FIRE WATER
G	GRILLE, GRAMS
GIV	GRAVITY INTAKE VENTILATOR
GPS	GRAMS PER SECOND
GN	GENERATOR
GLV	GLOBE VALVE
GRV	GRAVITY RELIEF VENTILATOR
GTV	GATE VALVE
GW	GREASE WASTE
HB	HOSE BIBB
HC	HANDICAPPED
HD	HUB DRAIN
HDF	HUMIDIFIER
HOA	HAND-OFF-AUTOMATIC
HOR	HORIZONTAL
HP	HORSEPOWER, HEAT PUMP
HPCW	HIGH PRESSURE COLD WATER (DOMESTIC)
HPS	HIGH PRESSURE STEAM
HSW	HOT SOFT WATER
HVAC	HEATING/VENTILATING/AIR CONDITIONING
HW	HOT WATER, HEATING WATER
HWR	HOT WATER RETURN
HWS	HOT WATER SUPPLY
HX	HEAT EXCHANGER
HZ	HERTZ (CYCLES PER SECOND)
ID	INDIRECT DRAIN
INV	INVERT
IPS	IRON PIPE SIZE
KW	KILOWATT
L	LITER
LD	LINEAR DIFFUSER
LED	LIGHT EMITTING DIODE
LFD	LAMINAR FLOW DIFFUSER
LL	REFRIGERANT LIQUID LINE
LPS	LITERS PER SECOND
LWT	LEAVING WATER TEMPERATURE
M	METER
MA	MEDICAL AIR
MAX	MAXIMUM
MD	MANUAL DAMPER
MED	MEDICAL
MH	MANHOLE
MIN	MINIMUM
MPS	METERS PER SECOND
MV	MEDICAL VACUUM
N	NITROGEN

HVAC	DESIGNATION
NC	NOISE CRITERIA/NORMALLY CLOSED
NCC	NITROGEN CONTROL CABINET
NO	NORMALLY OPEN/NITROUS OXIDE
NO.	NUMBER
NPTS	NATIONAL PIPE TREAD STANDARD
O	OXYGEN
OA	OUTSIDE AIR
OBD	OPPOSED BLADE DAMPER
OD	OVERFLOW DRAIN
OE	ORAL EVAC
OPER	OPERATING
P	PUMP
PFHX	PLATE FRAME HEAT EXCHANGER
PSIA	POUNDS PER SQUARE INCH (ABSOLUTE)
PSIG	POUNDS PER SQUARE INCH (GAGE)
PC	PUMPED CONDENSATE
PCD	PNEUMATIC CONTROL DAMPER
PCV	PNEUMATIC CONTROL VALVE
PDI	PLUMBING DRAIN INSTITUTE
PEX	CROSS-LINKED POLYETHYLEN PIPE
PH	PHASE
PHWS	PERIMETER HOT WATER SUPPLY
PHWR	PERIMETER HOT WATER RETURN
PL	PLUMBING
PRESS	PRESSURE
PROP	PROPELLER
PRS	PRESSURE REDUCING STATION
PRV	PRESSURE REDUCING VALVE/PRESSURE REGULATING VALVE/POWER ROOF VENTILATOR
PVC	POLYVINYL CHLORIDE
RA	RETURN AIR
RD	ROOF DRAIN
REF	REFERENCE
REG	REGISTER/REGULATING
REQD	REQUIRED
RF	RETURN FAN
RH	REHEAT, RELATIVE HUMIDITY
RHC	REHEAT COIL
RO	REVERSE OSMOSIS
RL	REFRIGERANT LIQUID
RPM	ROTATIONS PER MINUTE
RR	RETURN AIR REGISTER
RS	REFRIGERANT SUCTION
RTU	ROOF TOP UNIT
RW	RAINWATER
RWL	RAINWATER LEADER
S	SOIL
SA	SUPPLY AIR, SOUND ATTENUATOR
SAN	SANITARY
SD	SMOKE DAMPER, SMOKE DETECTOR, STORM DRAIN
SER	SIDEWALL EXHAUST REGISTER
SF	SUPPLY FAN
S/FD	SMOKE/FIRE DAMPER
SG	SUPPLY GRILLE
SH	SHOWER
SP	STATIC PRESSURE, SPRINKLER PIPE
SQ	SQUARE
SR	SIDEWALL REGISTER
SRW	SECONDARY RAINWATER
SS	SOLIDS SEPERATOR/SERVICE SINK

HVAC	DESIGNATION
SSF	SOLIDS SEPERATOR FILTER
SSR	SIDEWALL SUPPLY REGISTER
SST	STAINLESS STEEL
ST	STORM
STF	STEAM FILTER
STG	SIDEWALL TRANSFER GRILLE
STR	STRAINER
SW	SWITCH, SOFT WATER
T	TANK, THERMOSTAT
TD	TRENCH DRAIN
TEMP	TEMPERATURE
TG	TRANSFER GRILLE
TH	THERMOMETER
TP	TRAP PRIMER, STEAM TRAP
TMV	THERMOSTATIC MIXING VALVE
TS	TAMPER SWITCH
TSP	TOTAL STATIC PRESSURE
UH	UNIT HEATER
VTR	VENT THROUGH ROOF
W	WASTE
WB	WET BULB
WC	WATER CLOSET
WCO	WALL CLEANOUT
WH	WALL HYDRANT
WHA	WATER HAMMER ARRESTOR
WM	WATER METER
WPD	WATER PRESSURE DROP
WWF	WELDED WIRE FABRIC
UH	UNIT HEATER
UN	UNION
UR	URINAL
UST	UNDERGROUND STORAGE TANK
V	VENT, VOLT
VAC	VACUUM
VB	VACUUM BRAKER
VD	VOLUME DAMPER
VFD	VARIABLE FREQUENCY DRIVE

NOTE:
REFER TO FLOOR PLANS AND DETAILS
FOR EXTENT OF ABBREVIATIONS USED.

DESIGN CONDITIONS

OUTDOOR:	SUMMER DRY BULB	93° F
	SUMMER WET BULB (MCWB)	78° F
	SUMMER DRY BULB (MCDB)	88° F
	SUMMER WET BULB	80° F
	WINTER DRY BULB	32° F

RATED PARTITION LEGEND

- SMOKE PARTITION
- 1 HOUR FIRE BARRIER
- 2 HOUR FIRE BARRIER

GENERAL IDENTIFICATION

D / 100 — TYPE / AIR QUANTITY — DIFFUSER, REGISTER, GRILLE MARK

EF / A1 — EQUIPMENT TYPE / SCHEDULE REFERENCE / BUILDING DESIGNATOR — EQUIPMENT MARK

1.0 / 100 — AIR TERMINAL UNIT / AIR QUANTITY(CFM) ON DUCTWORK DRAWINGS OR FLOW (GPM) ON PIPING DRAWINGS — AIR TERMINAL UNIT

DUCTWORK SHEET NOTES

1. DUCT SIZES NOTED INDICATE MINIMUM INSIDE DIMENSIONS.
2. MINIMUM DUCT SIZE IS 8"Ø EXCEPT WHERE SPECIFICALLY INDICATED OTHERWISE.
3. DUCTWORK LOCATIONS SHOWN ARE COORDINATED IN THE DESIGN DRAWINGS, VARIATIONS FROM DESIGN ARE POSSIBLE. REFER TO SPECIFICATIONS FOR SHOP DRAWING REQUIREMENTS. DO NOT PROCEED WITH INSTALLATION OF DUCTWORK UNTIL APPROVED SHOP DRAWINGS ARE AVAILABLE AT THE SITE.
4. COORDINATE CEILING DIFFUSER, REGISTER AND GRILLE LOCATIONS WITH REFLECTED CEILING PLANS. FINAL LOCATION REQUIRES ARCHITECTURAL APPROVAL.
5. INSTALL SIDEWALL DIFFUSERS AND LINEAR TYPE DIFFUSERS PLUMB AND LEVEL ALONG A COMMON ELEVATION IN SPACE SERVED.
6. PAINT INSIDE AREAS OF DUCTWORK VISIBLE THROUGH DIFFUSERS, REGISTERS, GRILLES AND LOUVERS FLAT BLACK.
7. PROVIDE ACCESS DOORS IN DUCTWORK FOR VISUAL INSPECTION OF ALL CONTROL DAMPERS, TEMPERATURE CONTROL DEVICES, SMOKE DETECTORS, FIRE DAMPERS AND SMOKE DAMPERS.
8. PROVIDE ACCESS PANELS IN NON-ACCESSIBLE GENERAL CONSTRUCTION SUBSTRATES FOR MAINTENANCE AND ADJUSTMENT OF ALL CONCEALED DAMPERS, AIR CONTROL DEVICES, EQUIPMENT AND DUCTWORK ACCESS DOORS. WOOD, GYPSUM DRYWALL AND CONCEALED SPLINE TILE CEILINGS ARE CONSIDERED NON-ACCESSIBLE.
9. REFER TO TYPICAL DETAIL SHEETS FOR GENERAL DUCTWORK CONSTRUCTION, INSTALLATION, ASSEMBLY DETAILS, AND CONNECTIONS TO AIR TERMINAL UNITS AND AIR TERMINALS.
10. REFER TO MECHANICAL PIPING FLOOR PLANS FOR THERMOSTAT AND TEMPERATURE SENSOR LOCATIONS.
11. PERFORM WORK THAT MAY INTERRUPT ANY SERVICE TO ADJACENT AREAS AT TIMES THAT WILL MINIMIZE DISRUPTION TO FACILITY OPERATION.
12. REFER TO DUCTWORK SPECIFICATIONS FOR DUCT CONSTRUCTION MATERIALS AND PRESSURE CLASS.
13. THE DUCT CONFIGURATION(S) SHOWN. INCLUDING TURNS AND CONFIGURATION OF PATHWAY, ARE INTENDED TO MITIGATE NOISE TRANSMISSION, AND THAT THE CONTRACTOR'S DUCTWORK SHOP DRAWING SHOULD REFLECT EQUIVALENT ATTENUATING CHARACTERISTICS.

NOTE:
IF THIS DRAWING IS LESS THAN 34" X 22"
IT IS A REDUCED SIZE DRAWING

STM	DESCRIPTION	DATE	APPR
1	MOD P00005	05/2023	
2	MOD P00006 AND MOD P00007	10/2025	

NAVFAC

JOHN EDWARD BALL LICENSE No 66893 STATE OF FLORIDA PROFESSIONAL ENGINEER

BAMFORTH ENGINEERS & CONTRACTORS

APPROVED
FOR COMMANDER NAVFAC 11/21/2022
ACTIVITY: Approved by J. Scott Roberts, Asset Management Branch Head & Supervisory Facility Planner, PWD Beaufort, SC via email.
SATISFACTORY TO DATE 12/15/2022

DES MAB	DRW MAB	CHK JEB	
PM/DM	KTB / RLH		
BRANCH MANAGER	ALG		
CHIEF ENG/ARCH	EJA		
FP ENGINEER	DSN		

DEPARTMENT OF THE NAVY
NAVAL FACILITIES ENGINEERING SYSTEMS COMMAND
DC CORE: MCAS BEAUFORT
NAVAL FACILITIES ENGINEERING SYSTEMS COMMAND – MID-ATLANTIC NORFOLK, VA
BEAUFORT, SC
P-475 AIRCRAFT MAINTENANCE HANGAR - VOLUME 3 (OSF OPTION)
OSF / SHOP ANNEX - MECHANICAL ABBREVIATIONS & NOTES

SCALE: NOT TO SCALE
EPROJECT NO.: 1363603
CONSTR. CONTR. NO.
NAVFAC DRAWING NO. 12860204
SHEET 1003 OF 1412
OMH001

DRAWFORM REVISION: 25 AUGUST 2020

Autodesk Docs://0042 \MFA1 392 FS Maintenance Hangar/00042 735 Maint Hangar_OSF Shop Annex_MEc-0024.rvt
11/9/2026 8:36 AM

HVAC PIPING	DESIGNATION
CF	CHEMICAL FEED
CHWR	CHILLED WATER RETURN
CHWR	CHILLED WATER SUPPLY
CWR	CONDENSER WATER RETURN
CWS	CONDENSER WATER SUPPLY
D	DRAIN
PHWR	PERIMETER HOT WATER RETURN
PHWS	PERIMETER HOT WATER SUPPLY
CLPS()	CLEAN LOW PRESSURE STEAM (PSI GAGE)
HPS()	HIGH PRESSURE STEAM (PSI GAGE)
PC	PUMPED CONDENSATE
HWR	HOT WATER RETURN
HWS	HOT WATER SUPPLY
V	VENT
RS	REFRIGERANT SUCTION
RL	REFRIGERANT LIQUID
BFD	BOILER FEED DISCHARGE
CA	COMPRESSED AIR
PEX	CROSS LINKED POLYETHYLEN PIPE - RADIANT FLOOR SYSTEM

VALVES	DESIGNATION
	BALL
	BUTTERFLY
	CHECK - SPRING LOADED
	CHECK - SWING GATE
	GATE
	GLOBE
	GLOBE - ANGLE PATTERN
M	THREE-WAY CONTROL VALVE

NOTE: REFER TO FLOOR PLANS AND DETAILS FOR EXTENT OF SYMBOLS AND ABBREVIATION USED.

VALVES-SPECIAL DUTY	DESIGNATION
M	TWO-WAY CONTROL VALVE
	MANUAL FLOW BALANCING
	PRESSURE REDUCING/REGULATING
	SAFETY RELIEF
	TRIPLE DUTY
	LUBRICATED PLUG

PIPE FITTINGS	DESIGNATION
	TEE (TURNED UP)
	TEE (TURNED DOWN)
	UNION - GROUND JOINT
	REDUCER - CONCENTRIC
	REDUCER - ECCENTRIC, STRAIGHT CROWN
	REDUCER - ECCENTRIC, STRAIGHT INVERT
	CAPPED LINE
	BLIND FLANGED CAP
	PLUGGED LINE
	SPOOL PIECE - FLANGED
	VALVE IN RISER
	FLANGED
	SCREWED/SOLDERED/WELDED
	ELBOW (90°)
	ELBOW (45°)
	ELBOW (TURNED UP)
	ELBOW (TURNED DOWN)
	ELBOW (BASE)
	LATERAL
	TEE

PIPING SPECIALITIES	DESIGNATION
AV	AIR VENT - MANUAL
	ALIGNMENT PIPE GUIDES
	ANCHOR - PIPING
AAV	AUTOMATIC AIR VENT W/BALL VALVE
	EXPANSION LOOP
	FLEXIBLE CONNECTION - BRAIDED
	FLEXIBLE CONNECTION - ELASTOMERIC
	DIRECTION OF FLOW
	DIRECTION OF PIPING PITCH
	PRESSURE GAGE
	PRESSURE GAGE W/SNUBBER
	STRAINER - Y PATTERN
	STRAINER - Y PATTERN WITH BLOWDOWN (1" BALL VALVE AND CAP)
	THERMOMETER
	FLOW METER
	FLOW METERING ORIFICE
	PRESSURE AND TEST FITTING
	STEAM TRAP

DUCTWORK	DESIGNATION
	SQUARE SUPPLY AIR DIFFUSER
	TRANSFER AIR REGISTER/GRILLE
	RETURN AIR REGISTER/GRILLE
	EXHAUST AIR REGISTER
	SUPPLY AIR DUCT - SECTION
	RETURN AIR DUCT - SECTION
	EXHAUST AIR DUCT - SECTION
	ELBOW TURNED UP
	ELBOW TURNED DOWN
	TEE TURNED UP
	TEE TURNED DOWN
	MANUAL DAMPER - SINGLE LEAF TYPE
	MANUAL DAMPER - OPPOSED BLADE TYPE (UNLESS NOTED OTHERWISE)
	MOTOR ACTIVATED CONTROL DAMPER
	FLEXIBLE CONNECTION
UP	OFFSET IN DUCTWORK - UP
DN	OFFSET IN DUCTWORK - DOWN
	TURNING VANES - SQUARE ELBOW

DUCTWORK	DESIGNATION	
SD	SMOKE DETECTOR	
T	THERMOSTAT/TEMPERATURE SENSOR	
TH	COMBINATION TEMPERATURE / HUMIDITY SENSOR	
H	HUMIDITY SENSOR	
C	CO2 SENSOR	
	CONCEALED COVER PLATE FOR ACCESS TO REMOTE ACTUATOR OF MANUAL BALANCE DAMPERS ABOVE HARD CEILING	
	CEILING DIFFUSER - BOTTOM DUCT CONNECTION	
	STANDARD BRANCH TAKEOFF	
	LINEAR SLOT DIFFUSER	
12X6	RECTANGULAR DUCT, FIRST FIGURE IS SIDE SHOWN	
24X10Ø	FLAT OVAL DUCT IN SECTION DIMENSIONS SHOWN	
24Ø	ROUND DUCT, DIAMETER SHOWN	
	TRANSITION - ECCENTRIC	
	TRANSITION - CONCENTRIC	
FD FD	FIRE DAMPERS	VERTICAL POSITION HORIZONTAL POSITION
F/SD F/SD	COMBINATION FIRE SMOKE DAMPER	VERTICAL POSITION HORIZONTAL POSITION
	DUCT ACCESS DOOR TOP/SIDE/BOTTOM	
	HUMIDIFIER	
	RECTANGULAR/SQUARE TO ROUND DUCT TRANSITION	
	VARIABLE AIR VOLUME TERMINAL UNIT WITH REHEAT COIL	
	REHEAT COIL	

PIPING SHEET NOTES

1. REFER TO DIVISION 23 SPECIFICATIONS FOR ALL PIPING CONSTRUCTION AND INSTALLATION REQUIREMENTS.
2. MINIMUM BRANCH PIPING SIZE TO BE 3/4". BRANCH PIPING SIZES NOT SHOWN ON PLANS UNDER 3.0 GPM TO BE 3/4" UNLESS SPECIFICALLY NOTED OTHERWISE.
3. MOUNT ROOM THERMOSTATS/SENSORS AT 48" AFF.
4. REFER TO TYPICAL DETAIL SHEETS FOR ADDITIONAL VALVING, ACCESSORIES, EQUIPMENT CONNECTIONS AND ASSEMBLY DETAILS.
5. PIPING LOCATIONS SHOWN ARE COORDINATED IN THE DESIGN DRAWINGS, VARIATIONS FROM DESIGN ARE POSSIBLE. REFER TO SPECIFICATIONS FOR SHOP DRAWING REQUIREMENTS. DO NOT PROCEED WITH INSTALLATION OF PIPING UNTIL APPROVED SHOP DRAWINGS ARE AVAILABLE AT THE SITE.
6. PROVIDE ACCESS PANELS IN NON-ACCESSIBLE GENERAL CONSTRUCTION SUBSTRATES FOR MAINTENANCE AND ADJUSTMENT OF ALL CONCEALED VALVES, FLOW CONTROL DEVICES AND EQUIPMENT. REFER TO SPECIFICATIONS. WOOD, GYPSUM DRYWALL AND CONCEALED SPLINE TILE CEILINGS ARE CONSIDERED NON-ACCESSIBLE.
7. PROVIDE FIRE RATED SLEEVES FOR PIPING PENETRATIONS THROUGH RATED ASSEMBLIES. COORDINATE WITH LIFE SAFETY PLANS. REFER TO TYPICAL PIPE SLEEVE DETAILS.
8. PROVIDE DRAIN AND MANUAL AIR VENTS AT LOW AND HIGH POINTS IN THE PIPING SYSTEMS.
9. REFER TO ARCHITECTURAL EQUIPMENT ELEVATIONS FOR MECHANICAL WALL MOUNTED DEVICE LOCATIONS (I.E.: THERMOSTATS/HUMIDISTATS, CONTROL PANELS)
10. THE FIRST FLOOR IS A STRUCTURAL SLAB. ALL UTILITIES MUST BE SUPPORTED FROM THE SLAB WITH STAINLESS STEEL CONNECTIONS. UTILITIES MUST HAVE FLEXIBLE CONNECTIONS AS THE UTILITY ENTERS THE BUILDING. REFER TO SPECIFICATIONS FOR SUPPORT DETAILS. AT LOCATIONS WHERE UTILITIES ENTER THE BUILDING, THE PENETRATION THROUGH THE FOUNDATION WALLS, PRECAST WALLS, AND TURNDOWN SLAB EDGES MUST BE 6" LARGER THAN THE UTILITY TO ALLOW 6" OF SPACE BELOW THE UTILITY.

NOTE:
IF THIS DRAWING IS LESS THAN 34" X 22"
IT IS A REDUCED SIZE DRAWING

STM	DESCRIPTION	DATE	APPR
1	MOD P00005	05/2023	
2	MOD P00006 AND MOD P00007	10/2025	

NAVFAC

JOHN EDWARD BAILEY LICENSE No 66893 STATE OF FLORIDA PROFESSIONAL ENGINEER

SEAL

BAMFORTH ENGINEERS - CONTRACTORS

A/E INFO

APPROVED

FOR COMMANDER NAVFAC 11/21/2025

ACTIVITY: Approved by J. Scott Roberts, Asset Management Branch Head & Supervisory Facility Planner, PWD Beaufort, SC via email.

SATISFACTORY TO DATE: 12/15/2022

DES	MAB	DRW	MAB	CHK	JEB
PM/DM	KTB / RLH				
BRANCH MANAGER	ALG				
CHIEF ENG/ARCH	EJA				
FP ENGINEER	DSN				

DEPARTMENT OF THE NAVY
NAVAL FACILITIES ENGINEERING SYSTEMS COMMAND
NAVAL FACILITIES ENGINEERING SYSTEMS COMMAND ~ MID-ATLANTIC
NORFOLK, VA
DC CODE: MCAS BEAUFORT
BEAUFORT, SC

P-475 AIRCRAFT MAINTENANCE HANGAR - VOLUME 3 (OSF OPTION)

OSF / SHOP ANNEX - MECHANICAL SYMBOLS

SCALE: NOT TO SCALE
EPROJECT NO.: 1363603
CONSTR. CONTR. NO.
NAVFAC DRAWING NO. 12860205
SHEET 1004 OF 1412

OMH002

DRAWFORM REVISION: 25 AUGUST 2020

Autodesk Docs://2042 \ MFA1 392 F3 Maintenance Hangar/20042 735 Maint Hangar_OSF Shop Annex_MEc-0024.rvt
11/5/2025 8:36 AM

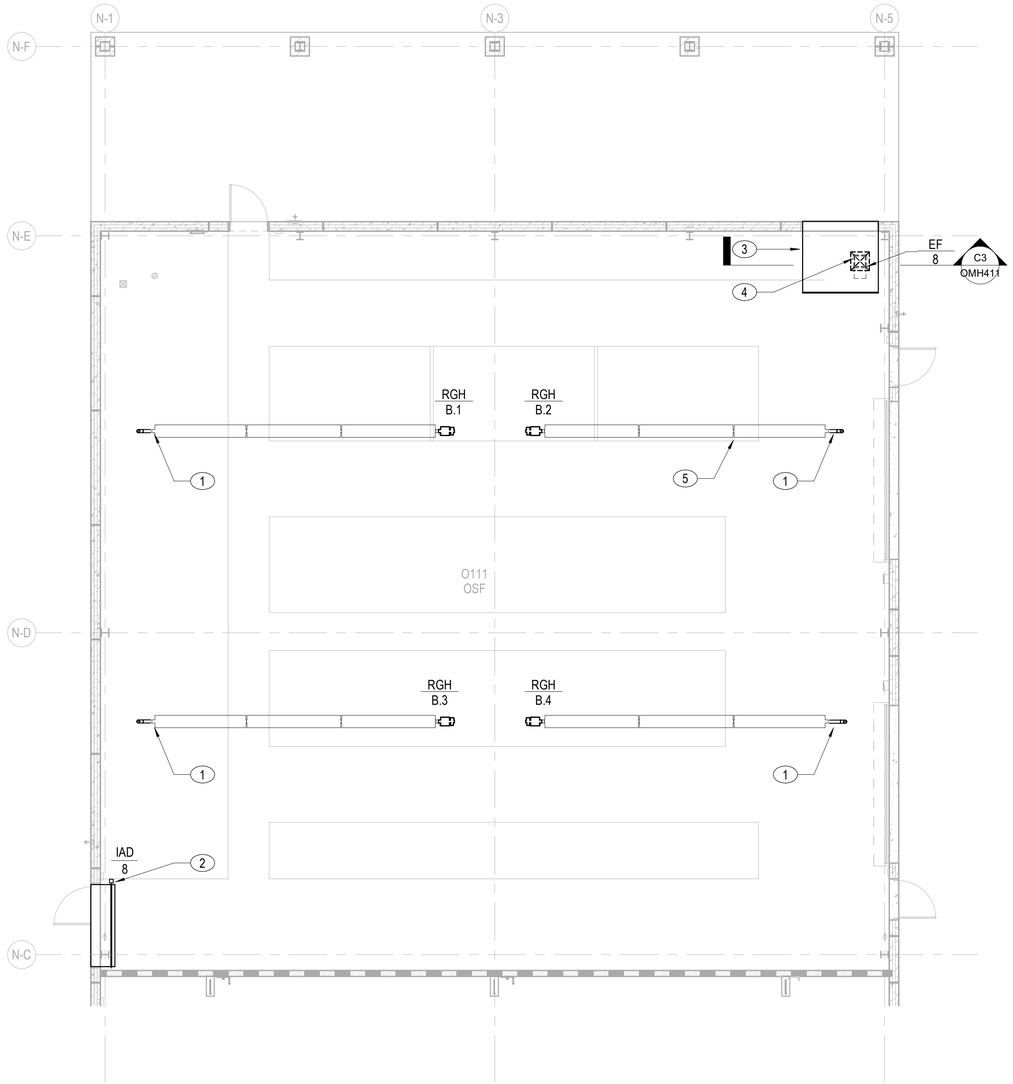

A1 DUCTWORK PLAN, GROUND FLOOR

1/8" = 1'-0"

NOTES:

SHEET NOTES:

A. REFER TO SYMBOLS, ABBREVIATIONS, AND GENERAL NOTES ON SHEET OMH001 AND OMH002.

B. PROVIDE EXTERIOR EXPOSURE CORROSION PROTECTION AND CONTROL IN ACCORDANCE WITH AN ENVIRONMENTAL SEVERITY CLASSIFICATION (ESC) OF C4 FOR BUILDING SYSTEMS AND COMPONENTS IN THE FOLLOWING ROOMS: O101 SHOP ANNEX ENTRY, O102 SHOP ANNEX, O108 ELEC, O109 MECH, AND 0111 OSF.

KEY NOTES (00)

1. 4" VENT UP THROUGH ROOF - TYPICAL.
2. 3' DEEP INTAKE AIR PLENUM SAME SIZE AS LOUVER. REFER TO ARCHITECTURAL PLANS.
3. 3' DEEP EXHAUST AIR PLENUM SAME SIZE AS LOUVER. REFER TO ARCHITECTURAL PLANS.
4. 24X24 EXHAUST DUCT DOWN TO 1'-0" AFF WITH SIDE 20x20 SIDE OPENING WITH W.W.F.
5. MOUNT RGH 13'-4" A.F.F. - TYPICAL.

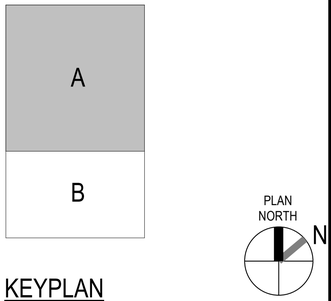

KEYPLAN

1/8" = 1'-0" GRAPHIC SCALE

NOTE:
IF THIS DRAWING IS LESS THAN 34" X 22"
IT IS A REDUCED SIZE DRAWING

STM	DESCRIPTION	DATE	APPR
1	MOD P00005	05/2023	
2	MOD P00006 AND MOD P00007	10/2025	

NAVFAC

JOHN EDWARD BAILEY LICENSE No 68893 STATE OF FLORIDA PROFESSIONAL ENGINEER

SEAL

BAMFORTH ENGINEERS - CONTRACTORS

A/E INFO

APPROVED

FOR COMMANDER NAVFAC 11/21/2025

ACTIVITY: Approved by J. Scott Roberts, Asset Management Branch Head & Supervisory Facility Planner, PWD Beaufort, SC via email.

SATISFACTORY TO DATE 12/15/2022

DES MAB	DRW MAB	CHK JEB	
PMDM		KTB / RLH	
BRANCH MANAGER		ALG	
CHIEF ENG/ARCH		EJA	
FP ENGINEER		DSN	

DEPARTMENT OF THE NAVY
NAVAL FACILITIES ENGINEERING SYSTEMS COMMAND
DC CODE:
NAVAL FACILITIES ENGINEERING SYSTEMS COMMAND ~ MID-ATLANTIC
NORFOLK, VA
MCAS BEAUFORT
BEAUFORT, SC

P-475 AIRCRAFT MAINTENANCE HANGAR - VOLUME 3 (OSF OPTION)

OSF / SHOP ANNEX - DUCTWORK PLAN - GROUND FLOOR - SECTOR A

SCALE:	1/8" = 1'-0"
EPROJECT NO.:	1363603
CONSTR. CONTR. NO.	
NAVFAC DRAWING NO.	12860206
SHEET	1005 OF 1412

OMH101A

DRAWFORM REVISION: 25 AUGUST 2020

Autodesk Docs://20042 VAP-A1 302 FS Maintenance Hangar/20042 FS3 Maint Hangar_OSF Shop Annex_MEP-r2024.rvt
11/3/2025 8:36 AM

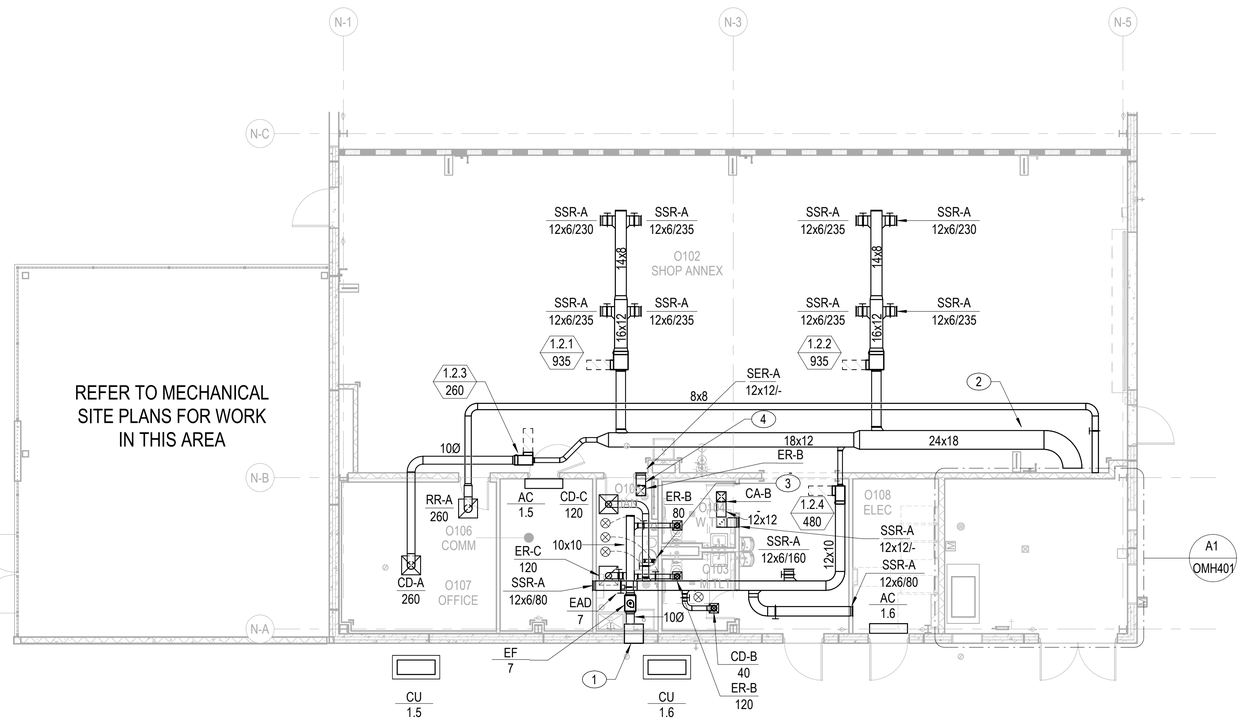

A1 DUCTWORK PLAN, GROUND FLOOR

1/8" = 1'-0"

NOTES:

SHEET NOTES:

A. REFER TO SYMBOLS, ABBREVIATIONS, AND GENERAL NOTES ON SHEET OMH001 AND OMH002.

B. PROVIDE EXTERIOR EXPOSURE CORROSION PROTECTION AND CONTROL IN ACCORDANCE WITH AN ENVIRONMENTAL SEVERITY CLASSIFICATION (ESC) OF C4 FOR BUILDING SYSTEMS AND COMPONENTS IN THE FOLLOWING ROOMS: O101 SHOP ANNEX ENTRY, O102 SHOP ANNEX, O108 ELEC, O109 MECH, AND 0111 OSF.

KEY NOTES (00)

1. 2' DEEP EXHAUST AIR PLENUM SAME SIZE AS LOUVER. REFER TO ARCHITECTURAL PLANS.
2. INSTALL DUCTWORK IN EXPOSED AREAS MINIMUM 13'-0" A.F.F. - TYPICAL.
3. 4" WATER HEATER EXHAUST FLUE UP TO ROOF.
4. 12"x12" TRANSFER AIR DUCT FOR WATER HEATER COMBUSTION AIR.

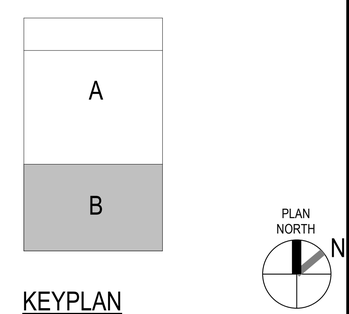

KEYPLAN

0 5' 10' 20' 30'

1/8" = 1'-0" GRAPHIC SCALE

NOTE:
IF THIS DRAWING IS LESS THAN 34" X 22"
IT IS A REDUCED SIZE DRAWING

STM	DESCRIPTION	DATE	APPR
1	MOD P00005	05/2023	
2	MOD P00006 AND MOD P00007	10/2025	

NAVFAC

JOHN EDWARD BALL LICENSE No 66893 STATE OF FLORIDA PROFESSIONAL ENGINEER

BAMFORTH ENGINEERS & ARCHITECTS

AE INFO

APPROVED

FOR COMMANDER NAVFAC

ACTIVITY: Approved by J. Scott Roberts, Asset Management Branch Head & Supervisory Facility Planner, PWD Beaufort, SC via email.

SATISFACTORY TO DATE 12/15/2022

DES	MAB	DRW MAB	CHK JEB
PM/DM	KTB / RLH		
BRANCH MANAGER	ALG		
CHIEF ENG/ARCH	EJA		
FP ENGINEER	DSN		

DEPARTMENT OF THE NAVY
NAVAL FACILITIES ENGINEERING SYSTEMS COMMAND
DC CORE
NAVAL FACILITIES ENGINEERING SYSTEMS COMMAND ~ MID-ATLANTIC
NORFOLK, VA
MCAS BEAUFORT
BEAUFORT, SC
P-475 AIRCRAFT MAINTENANCE HANGAR - VOLUME 3 (OSF OPTION)
OSF / SHOP ANNEX - DUCTWORK PLAN - GROUND FLOOR - SECTOR B

SCALE: 1/8" = 1'-0"
EPROJECT NO.: 1363603
CONSTR. CONTR. NO.
NAVFAC DRAWING NO. 12860207
SHEET 1006 OF 1412

OMH101B

DRAWFORM REVISION: 28 AUGUST 2020

Autodesk Docs://20241 VMFA1 502 F35 Maintenance Hangar/20241 F35 Maint Hangar_OSF Shop Annex_ME-r2024.rvt
11/5/2025 8:36:37 AM

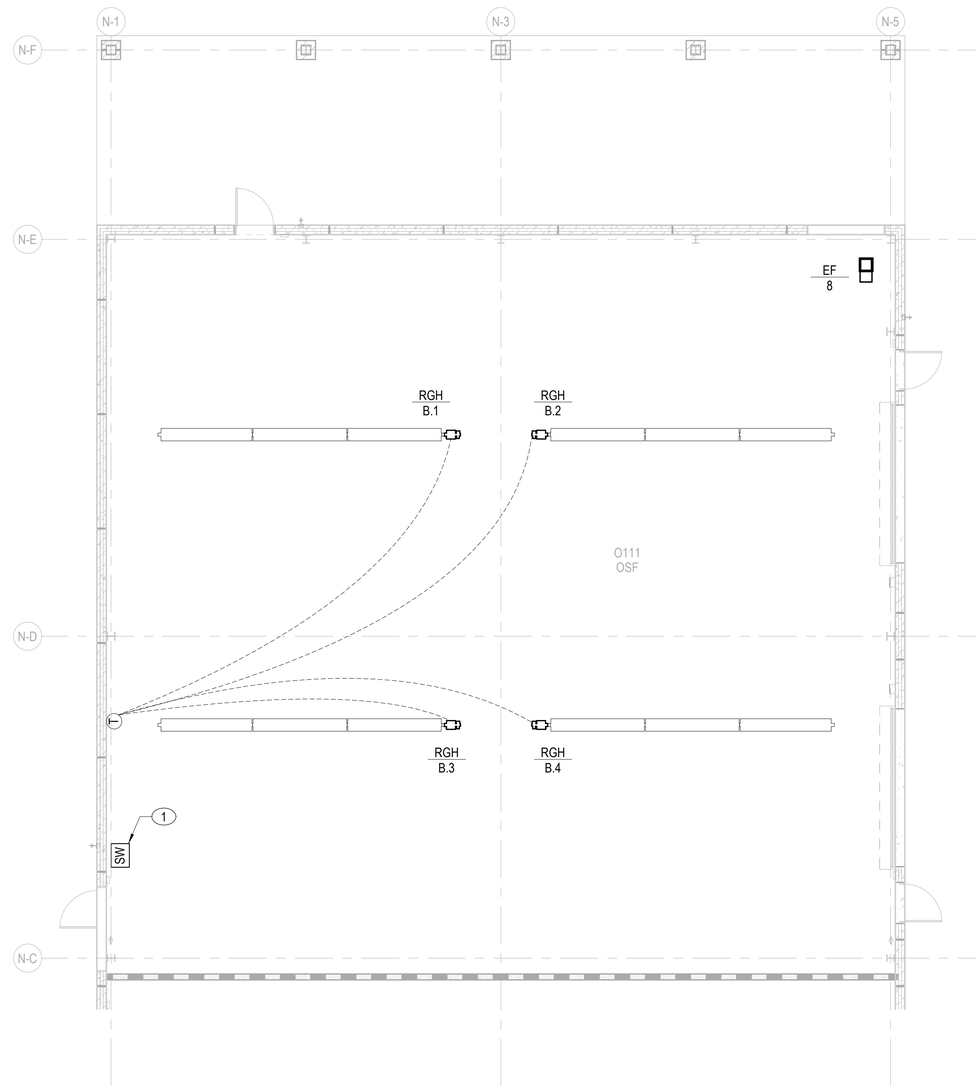

A1 PIPING PLAN, GROUND FLOOR

1/8" = 1'-0"

NOTES:

SHEET NOTES:

A. REFER TO SYMBOLS, ABBREVIATIONS, AND GENERAL NOTES ON SHEET OMH001 AND OMH002.

B. PROVIDE EXTERIOR EXPOSURE CORROSION PROTECTION AND CONTROL IN ACCORDANCE WITH AN ENVIRONMENTAL SEVERITY CLASSIFICATION (ESC) OF C4 FOR BUILDING SYSTEMS AND COMPONENTS IN THE FOLLOWING ROOMS: O101 SHOP ANNEX ENTRY, O102 SHOP ANNEX, O108 ELEC, O109 MECH, AND 0111 OSF.

KEY NOTES (00)

1 EMERGENCY HVAC SHUT-OFF SWITCH

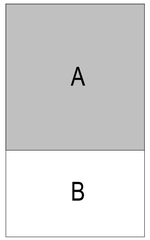

KEYPLAN

0 5' 10' 20' 30'

1/8" = 1'-0" GRAPHIC SCALE

NOTE:
IF THIS DRAWING IS LESS THAN 34" X 22"
IT IS A REDUCED SIZE DRAWING

		DATE	APPR
1	MOD P00005	05/2023	
2	MOD P00006 AND MOD P00007	10/2025	

STM DESCRIPTION

NAVFAC

JOHN EDWARD BAILEY LICENSE No 68893 STATE OF FLORIDA PROFESSIONAL ENGINEER

SEAL

BAMFORTH ENGINEERS & CONTRACTORS

AE INFO

APPROVED

FOR COMMANDER NAVFAC

ACTIVITY
Approved by J. Scott Roberts,
Asset Management Branch Head &
Supervisory Facility Planner, PWD
Beaufort, SC via email.

SATISFACTORY TO DATE 12/15/2022

DES	MAB	DRW	MAB	CHK	JEB

PM/DM	KTB / RLH
BRANCH MANAGER	ALG
CHIEF ENG/ARCH	EJA
FP ENGINEER	DSN

NAVAL FACILITIES ENGINEERING SYSTEMS COMMAND
NORFOLK, VA

DEPARTMENT OF THE NAVY
NAVAL FACILITIES ENGINEERING SYSTEMS COMMAND ~ MID-ATLANTIC
DC CORE

MCAS BEAUFORT
BEAUFORT, SC

P-475 AIRCRAFT MAINTENANCE HANGAR - VOLUME 3 (OSF OPTION)

OSF / SHOP ANNEX - PIPING PLAN - GROUND FLOOR - SECTOR A

SCALE:	1/8" = 1'-0"
EPROJECT NO.:	1363603
CONSTR. CONTR. NO.	
NAVFAC DRAWING NO.	12860208
SHEET	1007 OF 1412

OMP101A

DRAWFORM REVISION: 25 AUGUST 2020

Autodesk Docs://2040_NAVFAC SOUTH/ P-475 Maintenance Hangar/2040 FS8 Maint Hangar_OSF Shop Annex_ME-r2024.rvt
11/5/2025 8:36:38 AM

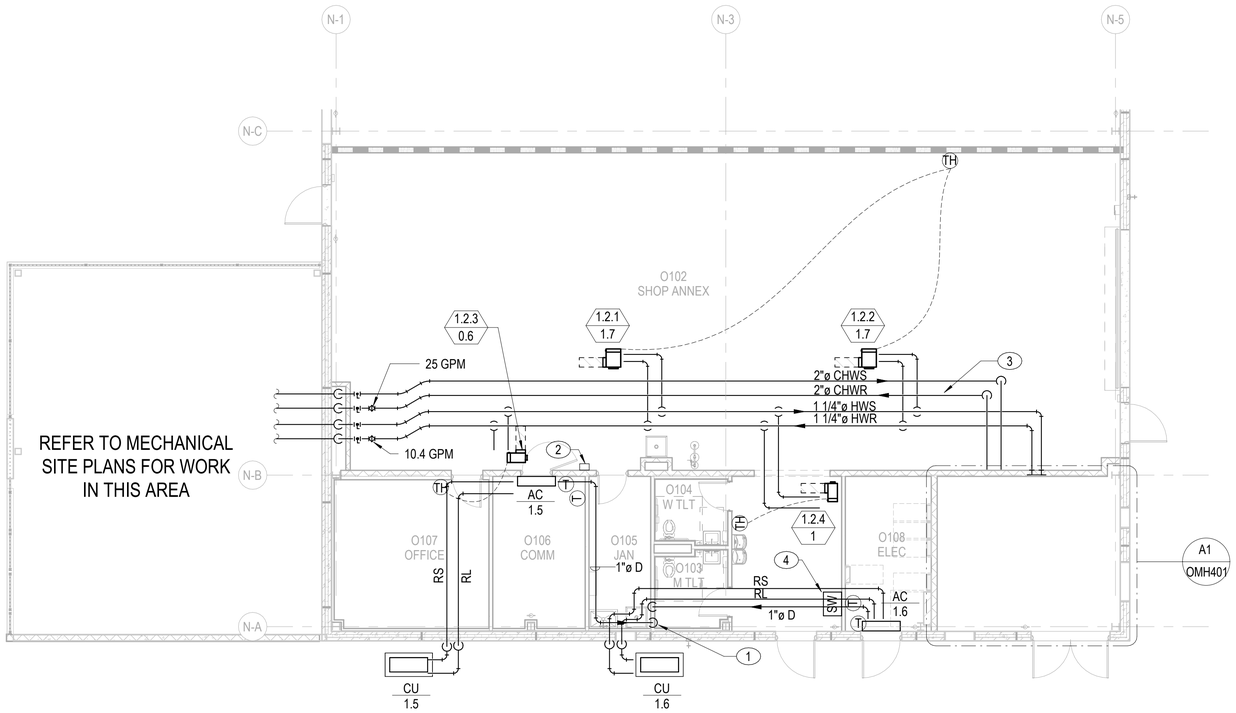

A1 PIPING PLAN, GROUND FLOOR

1/8" = 1'-0"

NOTES:

SHEET NOTES:

A. REFER TO SYMBOLS, ABBREVIATIONS, AND GENERAL NOTES ON SHEET OMH001 AND OMH002.

B. THE FIRST FLOOR IS A STRUCTURAL SLAB. ALL UTILITIES MUST BE SUPPORTED FROM THE SLAB WITH STAINLESS STEEL CONNECTIONS. UTILITIES MUST HAVE FLEXIBLE CONNECTIONS AS THE UTILITY ENTERS THE BUILDING. REFER TO SPECIFICATIONS FOR SUPPORT DETAILS. AT LOCATIONS WHERE UTILITIES ENTER THE BUILDING, THE PENETRATION THROUGH THE FOUNDATION WALLS, PRECAST WALLS, AND TURNDOWN SLAB EDGES MUST BE 6" LARGER THAN THE UTILITY TO ALLOW 6" OF SPACE BELOW THE UTILITY.

C. PROVIDE EXTERIOR EXPOSURE CORROSION PROTECTION AND CONTROL IN ACCORDANCE WITH AN ENVIRONMENTAL SEVERITY CLASSIFICATION (ESC) OF C4 FOR BUILDING SYSTEMS AND COMPONENTS IN THE FOLLOWING ROOMS: O101 SHOP ANNEX ENTRY, O102 SHOP ANNEX, O108 ELEC, O109 MECH, AND 0111 OSF.

KEY NOTES (00)

1. 1" CONDENSATE DRAIN PIPING DOWN IN WALL. EXIT WALL 12" ABOVE FINISHED FLOOR AND DISCHARGE WITH 90 DEGREE ELBOW TURNED DOWN IN JANITORS SINK.
2. WATER HEATER EMERGENCY DISCONNECT SWITCH.
3. INSTALL PIPING IN EXPOSED AREAS MINIMUM 13'-0" A.F.F. - TYPICAL.
4. EMERGENCY HVAC SHUT-OFF SWITCH

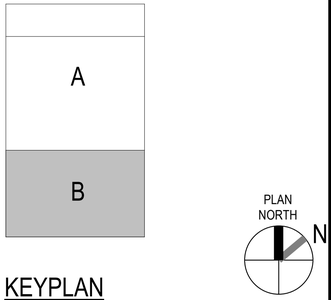

KEYPLAN

0 5' 10' 20' 30'

1/8" = 1'-0" GRAPHIC SCALE

NOTE:
IF THIS DRAWING IS LESS THAN 34" X 22"
IT IS A REDUCED SIZE DRAWING

STM	DESCRIPTION	DATE	APPR
1	MOD P00005	05/2023	
2	MOD P00006 AND MOD P00007	10/2025	

NAVFAC

JOHN EDWARD BALL
LICENSE
No 68893
STATE OF FLORIDA
PROFESSIONAL ENGINEER
SEAL

BAMFORTH
ENGINEERS & CONTRACTORS

AE INFO

APPROVED

FOR COMMANDER NAVFAC

ACTIVITY
Approved by J. Scott Roberts,
Asset Management Branch Head &
Supervisory Facility Planner, PWD
Beaufort, SC via email.

SATISFACTORY TO DATE 12/15/2022

DES	MAB	DRW	MAB	CHK	JEB
PM/DM	KTB / RLH				
BRANCH MANAGER	ALG				
CHIEF ENG/ARCH	EJA				
FP ENGINEER	DSN				

DEPARTMENT OF THE NAVY
NAVAL FACILITIES ENGINEERING SYSTEMS COMMAND
NAVAL FACILITIES ENGINEERING SYSTEMS COMMAND ~ MID-ATLANTIC
NORFOLK, VA

DC CORE:
MCAS BEAUFORT
BEAUFORT, SC

P-475 AIRCRAFT MAINTENANCE HANGAR - VOLUME 3 (OSF OPTION)

OSF / SHOP ANNEX - PIPING PLAN - GROUND FLOOR - SECTOR B

SCALE: 1/8" = 1'-0"

EPROJECT NO.: 1363603

CONSTR. CONTR. NO.

NAVFAC DRAWING NO.
12860209

SHEET 1008 OF 1412

OMP101B

DRAWFORM REVISION: 25 AUGUST 2020

Autodesk Docs://2042 \ MFA1 302 F3 Maintenance Hangar/2042 F3 Maint Hangar_OSF Shop Annex_MEc-0224.rvt
11/5/2025 8:36 AM

NOTES:

SHEET NOTES:

A. REFER TO SYMBOLS, ABBREVIATIONS, AND GENERAL NOTES ON SHEET OMH001 AND OMH002.

KEY NOTES (00)

1. 36" DEEP OA PLENUM SAME SIZE AS LOUVER. REFER TO ARCHITECTURAL PLANS.
2. MOTOR ACTIVATED CONTROL DAMPER.
3. EQUIPMENT CLEARANCE - TYPICAL
4. VFD. REFER TO ELECTRICAL PLANS. - TYPICAL
5. 12X12 EXHAUST DUCT. TERMINATE WITH WWF.
6. PLUMBING EQUIPMENT. REFER TO PLUMBING DOCUMENTS
7. CONNECT 64" DEEP 36"X48" EA PLENUM TO LOUVER. REFER TO ARCHITECTURAL PLANS.
8. CONNECT 36" DEEP 36"X18" EA PLENUM TO LOUVER. REFER TO ARCHITECTURAL PLANS.
9. 6" HIGH CONCRETE HOUSEKEEPING PAD. REFER TO STRUCTURAL DRAWINGS FOR DETAIL. - TYPICAL

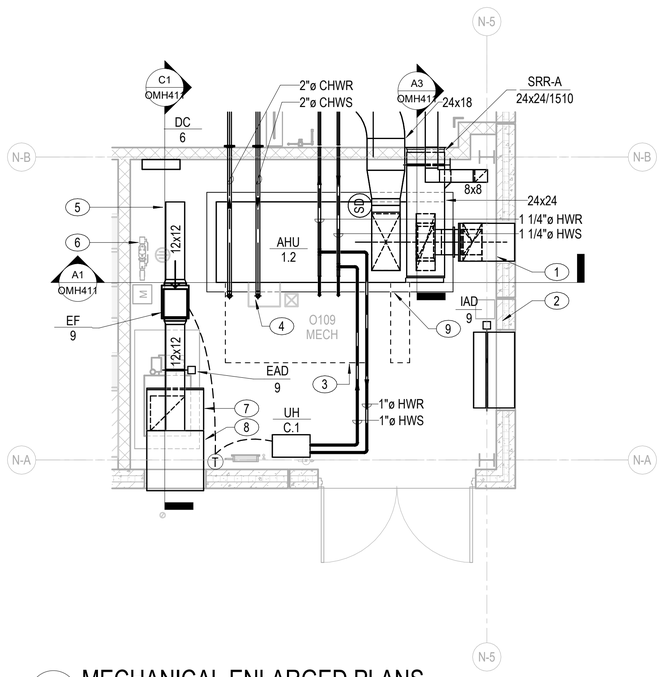

A1 MECHANICAL ENLARGED PLANS

1/4" = 1'-0"

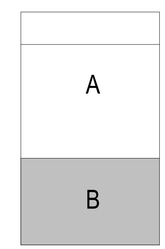

KEYPLAN

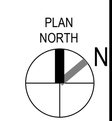

0 1' 5' 10' 15'

1/4" = 1'-0" GRAPHIC SCALE

NOTE:
IF THIS DRAWING IS LESS THAN 34" X 22"
IT IS A REDUCED SIZE DRAWING

SYM	DESCRIPTION	DATE	APPR
1	MOD P00005	05/2023	
2	MOD P00006 AND MOD P00007	10/2025	

NAVFAC

JOHN EDWARD BAILEY LICENSE No 68893 STATE OF FLORIDA PROFESSIONAL ENGINEER

BAMFORTH ENGINEERS + SURVEYORS

AE INFO

APPROVED

FOR COMMANDER NAVFAC

ACTIVITY: Approved by J. Scott Roberts, Asset Management Branch Head & Supervisory Facility Planner, PWD Beaufort, SC via email.

SATISFACTORY TO DATE 12/15/2022

DES	MAB	DRW	MAB	CHK	JEB

PM/DM	KTB / RLH
BRANCH MANAGER	ALG
CHIEF ENG/ARCH	EJA
FP ENGINEER	DSN

DEPARTMENT OF THE NAVY
NAVAL FACILITIES ENGINEERING SYSTEMS COMMAND
DC CORE: MCAS BEAUFORT
NAVAL FACILITIES ENGINEERING SYSTEMS COMMAND ~ MID-ATLANTIC
NORFOLK, VA
BEAUFORT, SC
P-475 AIRCRAFT MAINTENANCE HANGAR - VOLUME 3 (OSF OPTION)
OSF / SHOP ANNEX - MECHANICAL ENLARGED PLANS

SCALE: 1/4" = 1'-0"
EPROJECT NO.: 1363603
CONSTR. CONTR. NO.
NAVFAC DRAWING NO.: 12860210
SHEET 1009 OF 1412

OMH401

DRAWFORM REVISION: 20 AUGUST 2020

Autodesk Docs://2042 LMFA1 502 F35 Maintenance Hangar/2042 F35 Maint Hangar_OSF Shop Annex_ME-J2024.rvt
11/5/2025 8:36:40 AM

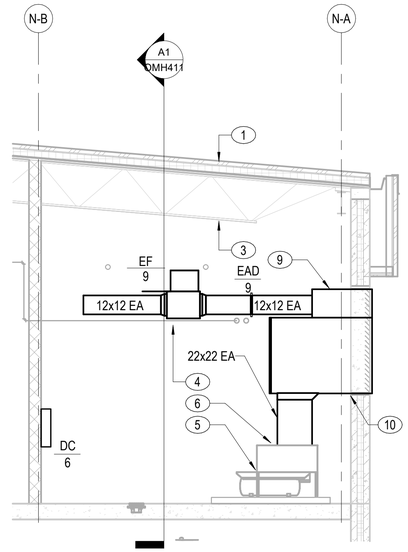

C1 MECHANICAL SECTION
1/4" = 1'-0"

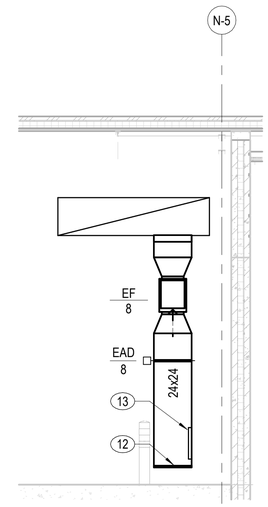

C3 MECHANICAL SECTION
1/4" = 1'-0"

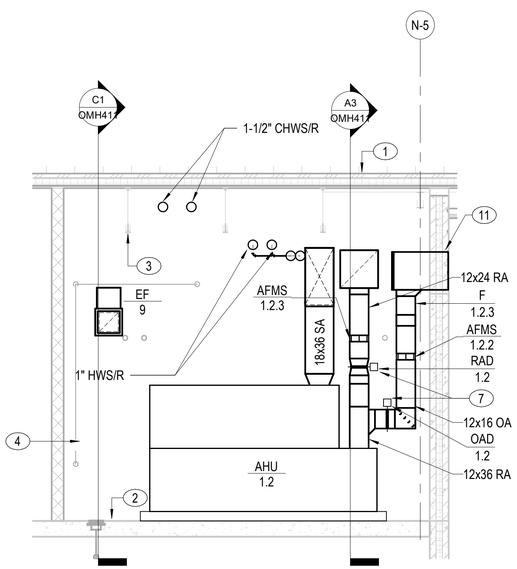

A1 MECHANICAL SECTION
1/4" = 1'-0"

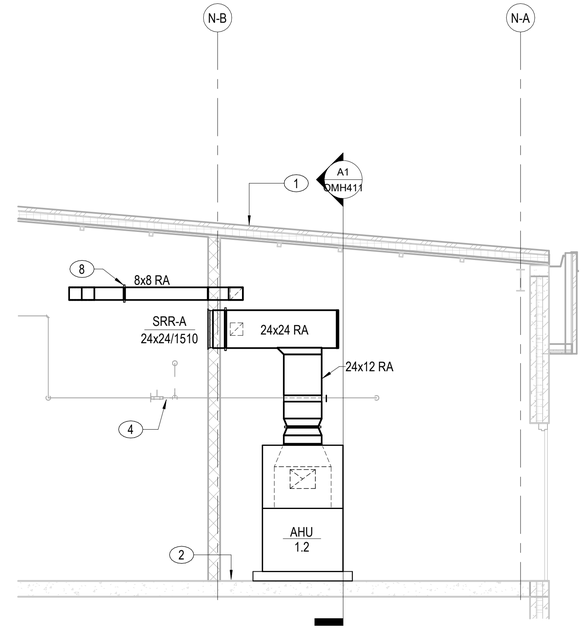

A3 MECHANICAL SECTION
1/4" = 1'-0"

NOTES:

SHEET NOTES:

A. REFER TO SYMBOLS, ABBREVIATIONS, AND GENERAL NOTES ON SHEET OMH001 AND OMH002.

KEY NOTES (00)

1 ROOF
2 FLOOR
3 UNDERSIDE OF STRUCTURE
4 PLUMBING PIPING. REFER TO PLUMBING DOCUMENTS
5 AIR COMPRESSOR. REFER TO PLUMBING DOCUMENTS.
6 CONNECT 22X22 EXHAUST DUCT TO AIR COMPRESSOR DISCHARGE LOUVER. PROVIDE FLEXIBLE CONNECTION. REFER TO PLUMBING DRAWINGS.
7 MOTOR ACTIVATED CONTROL DAMPER.
8 MANUAL DAMPER.
9 36" DEEP EA PLENUM SAME SIZE AS LOUVER. REFER TO ARCHITECTURAL PLANS.
10 64" DEEP EA PLENUM SAME SIZE AS LOUVER. REFER TO ARCHITECTURAL PLANS.
11 36" DEEP OA PLENUM SAME SIZE AS LOUVER. REFER TO ARCHITECTURAL PLANS.
12 TERMINATE 1'-0" A.F.F.
13 20x20 SIDE OPENING WITH W.W.F.

0 1' 5' 10' 15'
1/4" = 1'-0" GRAPHIC SCALE

NOTE:
IF THIS DRAWING IS LESS THAN 34" X 22"
IT IS A REDUCED SIZE DRAWING

STM	DESCRIPTION	DATE	APPR
1	MOD P00005	05/2023	
2	MOD P00006 AND MOD P00007	10/2025	

NAVFAC

JOHN EDWARD BALL
LICENSE
No 68893
STATE OF FLORIDA
PROFESSIONAL ENGINEER

BAMFORTH ENGINEERS + SURVEYORS

AE INFO

APPROVED
FOR COMMANDER NAVFAC
ACTIVITY: Approved by J. Scott Roberts, Asset Management Branch Head & Supervisory Facility Planner, PWD Beaufort, SC via email.
SATISFACTORY TO DATE 12/15/2022

DES MAB	DRW MAB	CHK JEB	
PM/DM			KTB / RLH
BRANCH MANAGER			ALG
CHIEF ENG/ARCH			EJA
FP ENGINEER			DSN

DEPARTMENT OF THE NAVY
NAVAL FACILITIES ENGINEERING SYSTEMS COMMAND
NAVAL FACILITIES ENGINEERING SYSTEMS COMMAND ~ MID-ATLANTIC
NORFOLK, VA
DC CORE
MCAS BEAUFORT
BEAUFORT, SC
P-475 AIRCRAFT MAINTENANCE HANGAR - VOLUME 3 (OSF OPTION)
OSF / SHOP ANNEX - MECHANICAL SECTIONS

SCALE: 1/4" = 1'-0"
EPROJECT NO.: 1363603
CONSTR. CONTR. NO.
NAVFAC DRAWING NO.: 12860211
SHEET 1010 OF 1412
OMH411

DRAWFORM REVISION: 25 AUGUST 2020

Autodesk Docs://2042 \ MBAT 502 F35 Maintenance Hangar/2042 F35 Maint Hangar_OSF Shop Annex_MEC.rvt
11/5/2025 8:36:42 AM

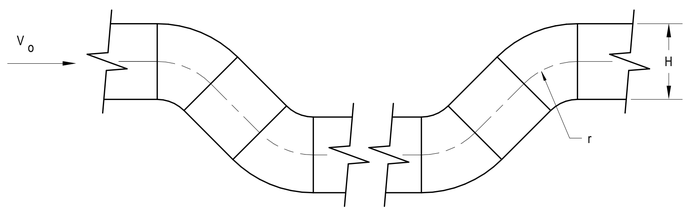

NOTES:
1. r/H EQUALS MINIUMUM OF 1.5.
2. 45° SMOOTH RADIUS ELBOWS.
3. PROVIDE OFFSETS OF CONFIGURATIONS INDICATED ON DUCTWORK FLOOR PLANS.
4. COORDINATE OTHER TRADES TO MINIMIZE FIELD REQUIRED OFFSETS.
5. PROVIDE A MINIMUM OF 6" STRAIGHT DUCT BETWEEN FITTINGS.

C1 TYPICAL DUCTWORK OFFSET
NOT TO SCALE

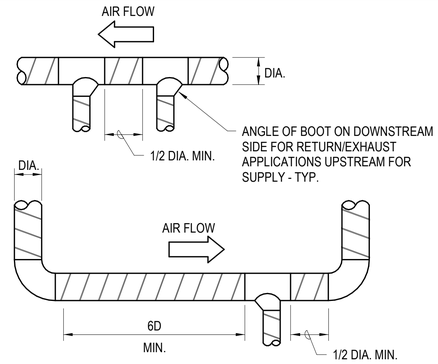

SPACING OF FITTINGS WHEN USING 90° LOW LOSS TEE

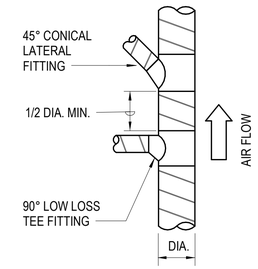

SPACING OF FITTINGS WHEN USING 45° CONICAL LATERAL

NOTE:
FOR USE WITH SYSTEMS DESIGNED FOR STATIC PRESSURES EXCEEDING 2 INCHES W.G. - REFER TO SPECIFICATIONS FOR USE WITH SPIRAL LOCKSEAM DUCTWORK.

C2 ROUND DUCTWORK
NOT TO SCALE

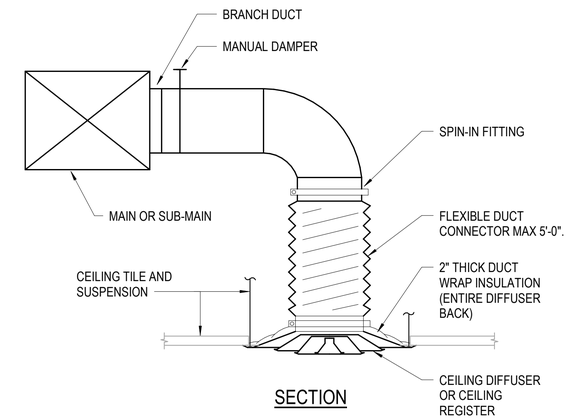

SECTION

C4 CEILING DIFFUSER AND REGISTER CONNECTION
NOT TO SCALE

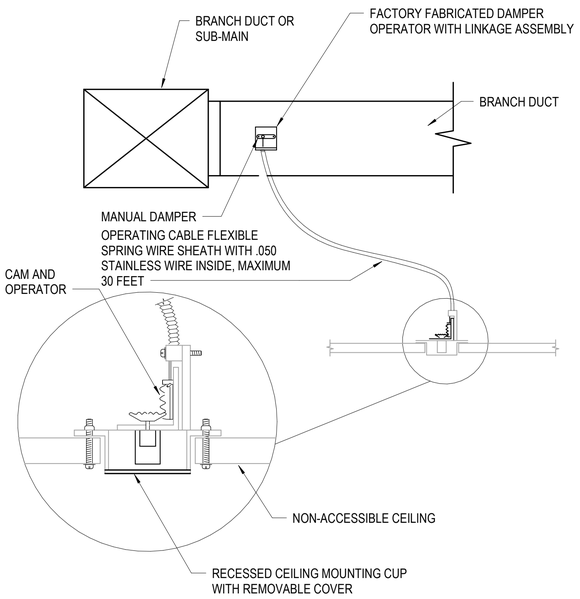

SIDE ELEVATION

NOTE:
PROVIDE SOCKET WRENCH TO ENGAGE OPERATOR SHAFT FOR DAMPER ADJUSTMENT - PROVIDE A MINIMUM OF THREE WRENCHES

A1 REMOTE ACTIVATED MANUAL DAMPER
NOT TO SCALE

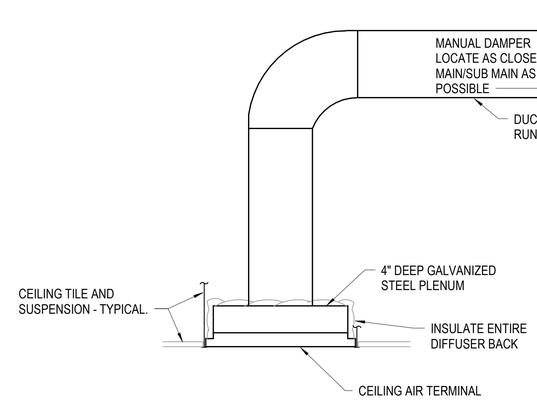

DUCT RUNOUT SCHEDULE

SIZE	RETURN/EXHAUST CFM RANGE
8"Ø	0-200
10"Ø	205-330
12"Ø	335-430
14"Ø	435-530
16"Ø	535-850
18"Ø	855-1590

B2 RETURN, EXHAUST AIR TERMINALS
NOT TO SCALE

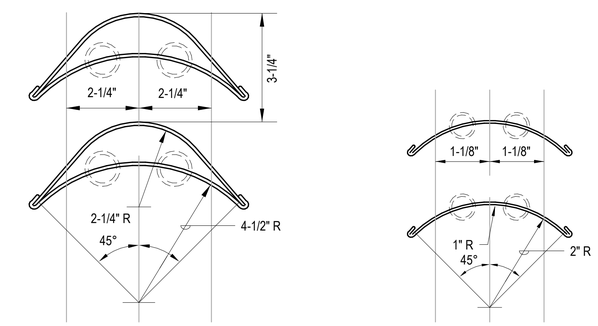

LARGE DOUBLE VANE ELBOW

USE FOR ELBOWS 36" OR WIDER AND ANY DEPTH

SMALL SINGLE VANE ELBOW

USE FOR ELBOWS UP TO 36" IN WIDTH AND/OR DEPTH

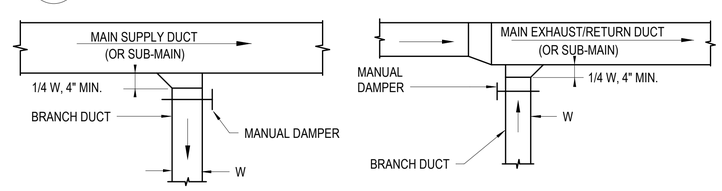

SUPPLY AIR DUCT

EXHAUST/RETURN AIR DUCT

NOTE:
1. PROVIDE MANUAL DAMPER IN EACH BRANCH DUCT AS INDICATED ABOVE AND AT OTHER LOCATIONS ON FLOOR PLANS.

A2 BRANCH DUCT CONNECTIONS
NOT TO SCALE

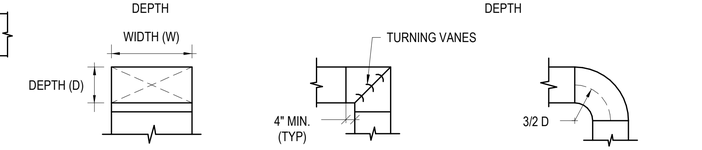

FRONT VIEW

MITERED ELBOW

SMOOTH RADIUS ELBOW

NOTES:
1. PROVIDE ONE OF THE TWO TYPES OF TURNING VANES SHOWN ABOVE FOR ALL SQUARE OR RECTANGULAR ELBOWS (NON-RADIUS TYPE).
2. CONSTRUCT, SUPPORT, AND FASTEN VANES AS RECOMMENDED BY SMACNA.
3. ALL SQUARE OR RECTANGULAR ELBOWS SHOWN ON PLANS FOR EXHAUST OR RETURN DUCT MAY BE MADE RADIUS ELBOWS PROVIDED SPACE PERMITS RADIUS INSTALLATION.
4. ALL SQUARE OR RECTANGULAR ELBOWS SHOWN ON PLANS FOR SUPPLY DUCT MAY BE MADE RADIUS ELBOWS PROVIDED SPACE PERMITS RADIUS INSTALLATION AND THERE IS NO OUTLET OR TAKE-OFF WITHIN 5D ON THE DOWNSTREAM SIDE OF THE ELBOW.

A4 RECTANGULAR ELBOWS
NOT TO SCALE

NOTE:
IF THIS DRAWING IS LESS THAN 34" X 22"
IT IS A REDUCED SIZE DRAWING

STM	DESCRIPTION	DATE	APPR
1	MOD P00005	05/2023	
2	MOD P00006 AND MOD P00007	10/2025	

NAVFAC

JOHN EDWARD BALL LICENSE No 66893 STATE OF FLORIDA PROFESSIONAL ENGINEER

BAMFORTH ENGINEERS & ARCHITECTS

AE INFO

APPROVED
FOR COMMANDER NAVFAC 11/21/2025

ACTIVITY: Approved by J. Scott Roberts, Asset Management Branch Head & Supervisory Facility Planner, PWD Beaufort, SC via email.

SATISFACTORY TO DATE	12/15/2022		
DES	MAB	DRW MAB	CHK JEB
PM/DM	KTB / RLH		
BRANCH MANAGER	ALG		
CHIEF ENG/ARCH	EJA		
FP ENGINEER	DSN		

DEPARTMENT OF THE NAVY
NAVAL FACILITIES ENGINEERING SYSTEMS COMMAND
DC CORE:
MCAS BEAUFORT

NAVAL FACILITIES ENGINEERING SYSTEMS COMMAND – MID-ATLANTIC
NORFOLK, VA

BEAUFORT, SC

P-475 AIRCRAFT MAINTENANCE HANGAR - VOLUME 3 (OSF OPTION)

OSF / SHOP ANNEX - DUCTWORK DETAILS

SCALE: NOT TO SCALE
EPROJECT NO.: 1363603
CONSTR. CONTR. NO.
NAVFAC DRAWING NO. 12860212
SHEET 1011 OF 1412

OMH501

DRAWFORM REVISION: 25 AUGUST 2020

Autodesk Docs://20043 MFA1 502 F39 Maintenance Hangar/20043 F39 Maint Hangar_OSF Shop Annex_ME-v2024.rvt
11/5/2025 8:36:43 AM

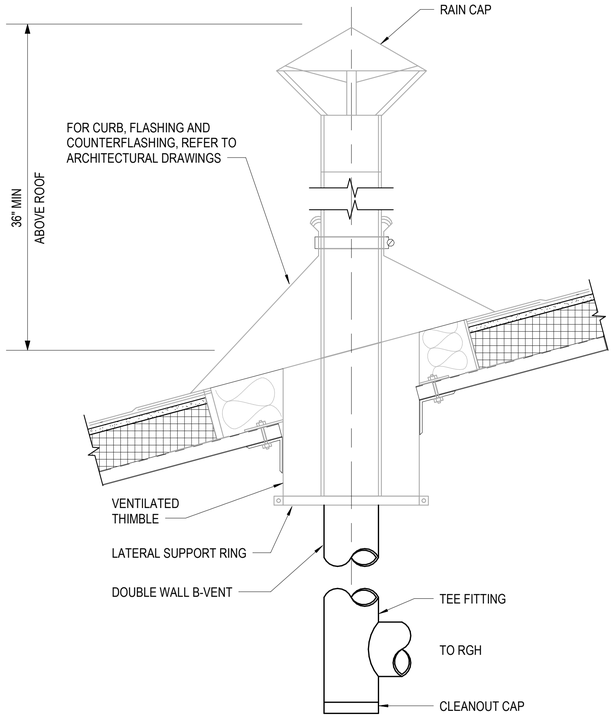

C1 RADIANT GAS HEATER VENT
NOT TO SCALE

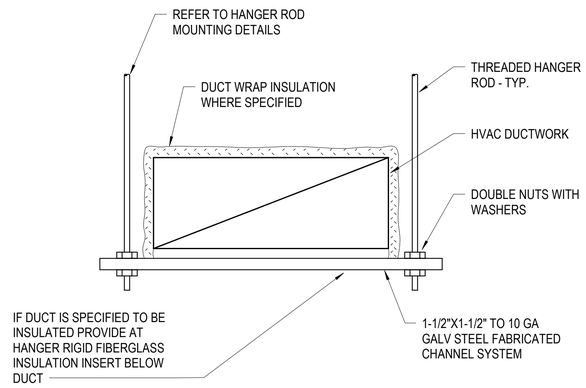

NOTES:
1. FOR DUCTWORK GREATER THAN 36" WIDE, PROVIDE HANGERS AT EVENLY SPACED INTERVALS, NOT TO EXCEED 60" CENTER-TO-CENTER, AND WHERE CHANGES IN DUCTWORK DIRECTION OCCUR.
2. FOR DUCTWORK LESS THAN 36" WIDE, PROVIDE HANGERS SPACED AT INTERVALS PER SMACNA STANDARDS.

C2 DUCTWORK HANGER
NOT TO SCALE

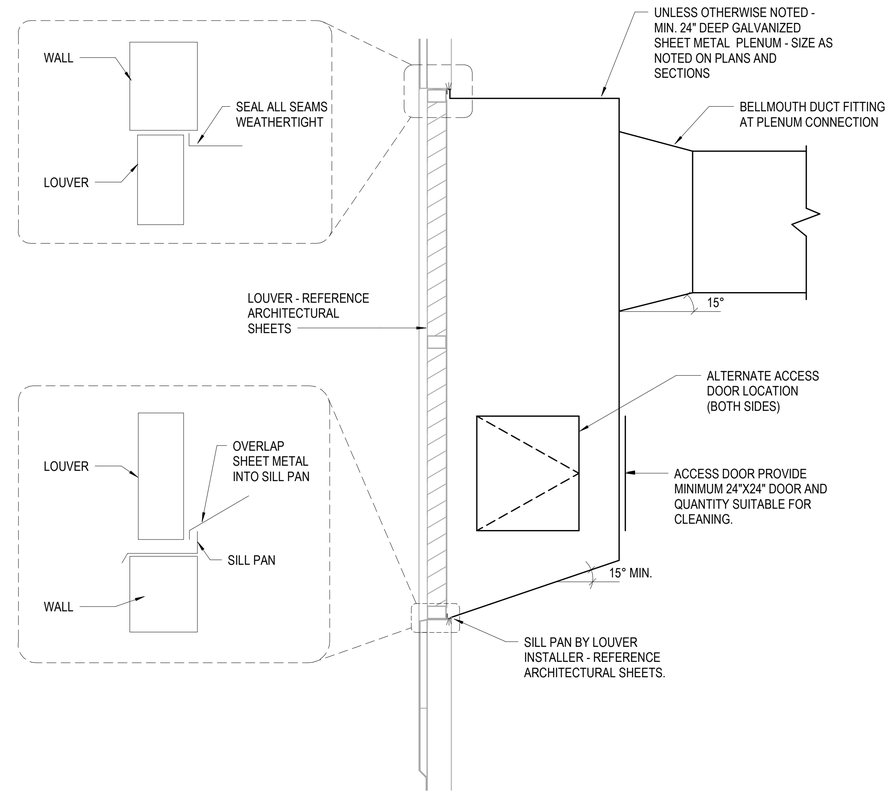

B4 LOUVER PLENUM CONNECTION
NOT TO SCALE

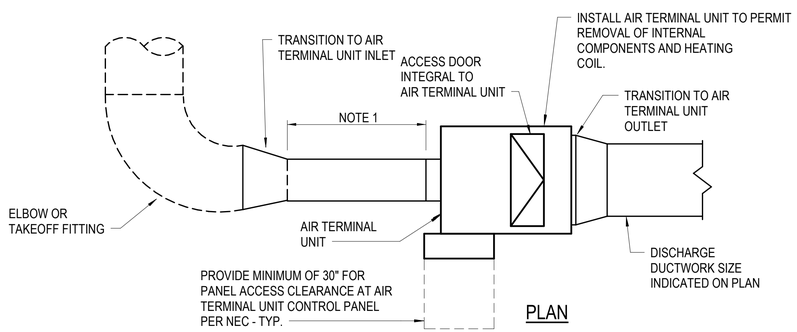

NOTES:
1. AIR TERMINAL UNIT LOCATIONS ON CONTRACT DRAWINGS ARE SCHEMATIC. PROVIDE MINIMUM OF SIX INLET DUCT DIAMETERS OF STRAIGHT DUCT UPSTREAM OF AIR TERMINAL UNIT INLET. FLEXIBLE DUCTWORK AT AIR TERMINAL UNIT INLET IS NOT ACCEPTABLE.

A1 AIR TERMINAL UNIT CONNECTION
NOT TO SCALE

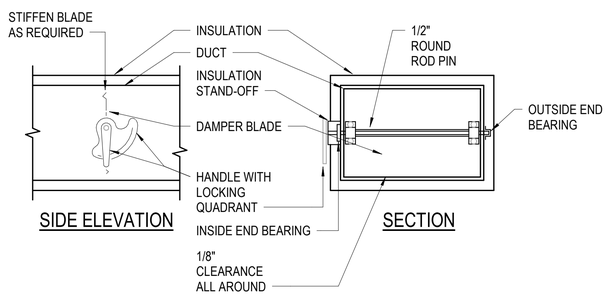

NOTES:
1. DETAIL SHOWS SINGLE BLADE DAMPER. MULTI-BLADE & ROUND DAMPER INSTALLATION IS SIMILAR.
2. DELETE INSULATION STAND-OFF ON DUCTWORK WITHOUT EXTERIOR INSULATION.

A3 SINGLE BLADE MANUAL DAMPER
NOT TO SCALE

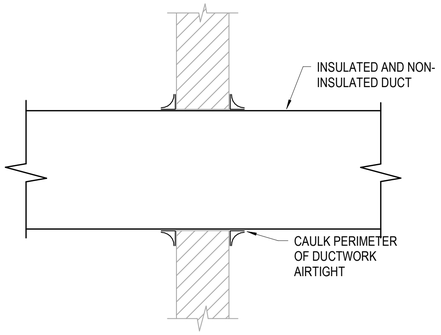

NOTE:
PROVIDE WHERE ALL DUCTS PENETRATE NON-RATED AND SOUND TIGHT WALLS AND PARTITIONS.

A4 WALL-DUCT PENETRATION
NOT TO SCALE

NOTE:
IF THIS DRAWING IS LESS THAN 34" X 22"
IT IS A REDUCED SIZE DRAWING

STM	DESCRIPTION	DATE	APPR
1	MOD P00005	05/2023	
2	MOD P00006 AND MOD P00007	10/2025	

NAVFAC

JOHN EDWARD BALL LICENSE No 66893 STATE OF FLORIDA PROFESSIONAL ENGINEER

BAMFORTH ENGINEERS ARCHITECTS

AE INFO

APPROVED

FOR COMMANDER NAVFAC 11/21/2025

ACTIVITY: Approved by J. Scott Roberts, Asset Management Branch Head & Supervisory Facility Planner, PWD Beaufort, SC via email.

SATISFACTORY TO DATE 12/15/2022

DES MAB	DRW MAB	CHK JEB	
PM/DM		KTB / RLH	
BRANCH MANAGER		ALG	
CHIEF ENG/ARCH		EJA	
FP ENGINEER		DSN	

DEPARTMENT OF THE NAVY
NAVAL FACILITIES ENGINEERING SYSTEMS COMMAND
DC CORE:
MCAS BEAUFORT

NAVAL FACILITIES ENGINEERING SYSTEMS COMMAND – MID-ATLANTIC NORFOLK, VA

BEAUFORT, SC

P-475 AIRCRAFT MAINTENANCE HANGAR - VOLUME 3 (OSF OPTION)

OSF / SHOP ANNEX - DUCTWORK DETAILS

SCALE: As indicated
EPROJECT NO.: 1363603
CONSTR. CONTR. NO.
NAVFAC DRAWING NO. 12860213
SHEET 1012 OF 1412

OMH502

DRAWFORM REVISION: 25 AUGUST 2020

Autodesk Docs://20043 MRA1 502 F35 Maintenance Hangar/20043 F35 Maint Hangar_OSF Shop Annex_ME-r2024.rvt
11/5/2025 8:36:43 AM

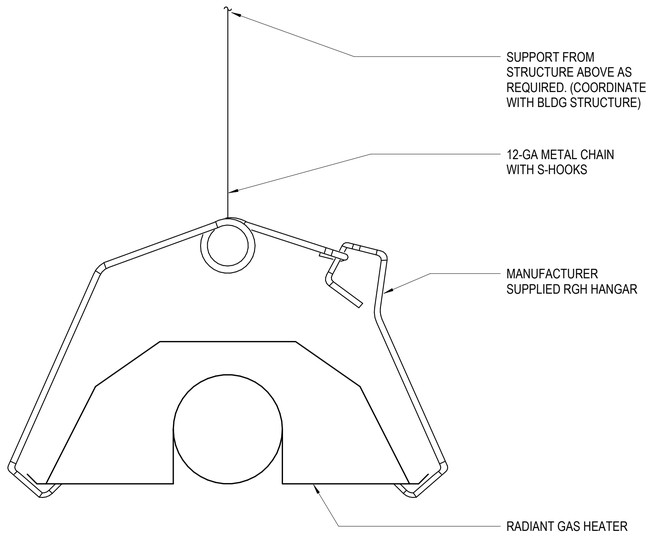

C1 RADIANT GAS HEATER SUPPORT
NOT TO SCALE

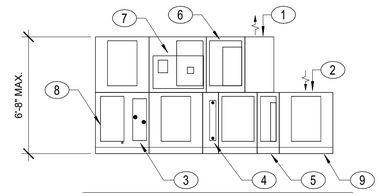

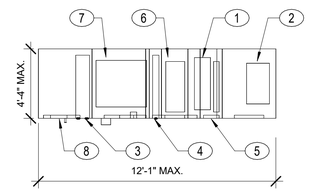

C3 AHU/1.2 COMPONENT LAYOUT
1/4" = 1'-0"

NOTES:

KEY NOTES (00)

1 SUPPLY AIR DUCT CONNECTION
2 RETURN AIR DUCT CONNECTION
3 CHILLED WATER COOLING COIL
4 HOT WATER HEATING COIL
5 PRE-FILTER SECTION
6 INTERMEDIATE FILTER SECTION
7 SUPPLY FANS
8 ACCESS DOOR - TYPICAL
9 6" BASERAIL

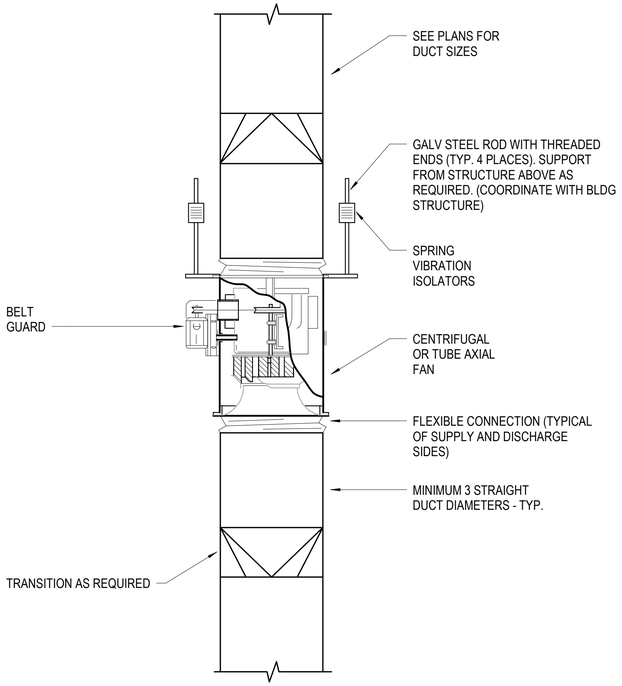

A1 VERTICAL INLINE CENTRIFUGAL FAN
NOT TO SCALE

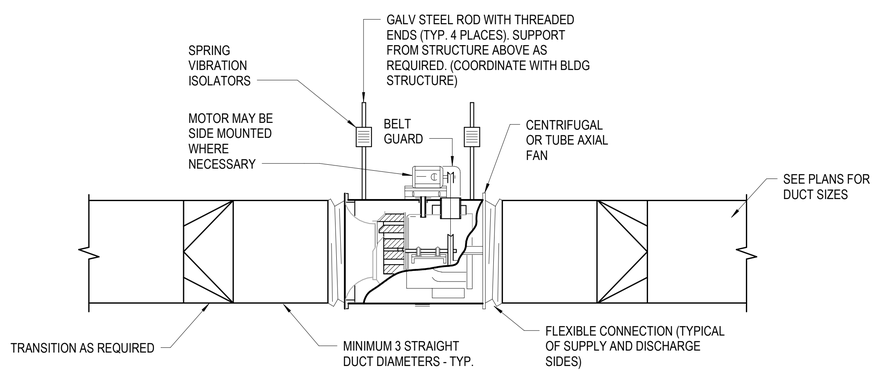

A2 INLINE CENTRIFUGAL FAN
NOT TO SCALE

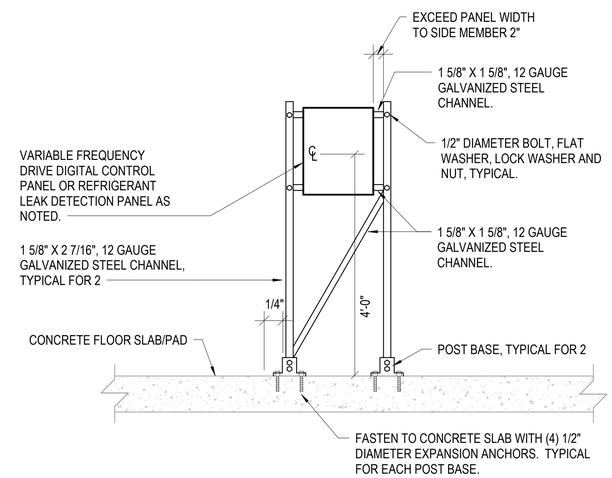

FRONT ELEVATION

A5 GENERAL PANEL RACK
NOT TO SCALE

NOTE:
IF THIS DRAWING IS LESS THAN 34" X 22"
IT IS A REDUCED SIZE DRAWING

STM	DESCRIPTION	DATE	APPR
1	MOD P00005	05/2023	
2	MOD P00006 AND MOD P00007	10/2025	

NAVFAC

JOHN EDWARD BALL LICENSE No 68893 STATE OF FLORIDA PROFESSIONAL ENGINEER

BAMFORTH ENGINEERS & CONTRACTORS

AE INFO

APPROVED
FOR COMMANDER NAVFAC 11/21/2023
ACTIVITY Approved by J. Scott Roberts Asset Management Branch Head & Supervisory Facility Planner, PWD Beaufort, SC via email.
SATISFACTORY TO DATE 12/15/2022

DES	MAB	DRW	MAB	CHK	JEB
PM/DM	KTB / RLH				
BRANCH MANAGER	ALG				
CHIEF ENG/ARCH	EJA				
FP ENGINEER	DSN				

NAVAL FACILITIES ENGINEERING SYSTEMS COMMAND
NORFOLK, VA
NAVFAC ~ MID-ATLANTIC

DEPARTMENT OF THE NAVY
NAVAL FACILITIES ENGINEERING SYSTEMS COMMAND ~ MID-ATLANTIC
DC CODE: MCAS BEAUFORT
BEAUFORT, SC
P-475 AIRCRAFT MAINTENANCE HANGAR - VOLUME 3 (OSF OPTION)
OSF / SHOP ANNEX - DUCTWORK DETAILS

SCALE: As indicated
EPROJECT NO.: 1363603
CONSTR. CONTR. NO.
NAVFAC DRAWING NO: 12860214
SHEET 1013 OF 1412
OMH503

DRAWFORM REVISION: 25 AUGUST 2020

Autodesk Docs://2024 VMFA1 S02 F35 Maintenance Hangar/2024S F35 Maint Hangar_OSF Shop Annex_ME-U2024.rvt
11/3/2025 8:36:44 AM

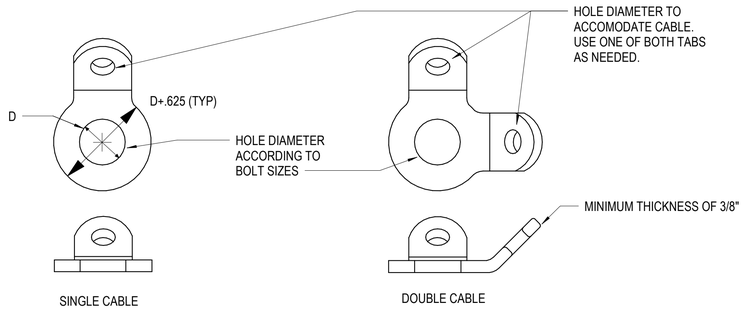

C1 ATFP & SEISMIC BRACING BENT PLATE CONNECTOR DETAIL

NOT TO SCALE

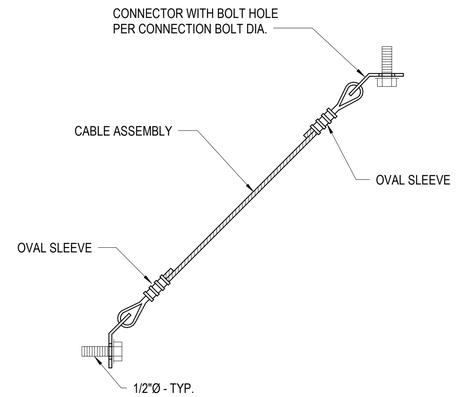

NOTE: ALL HARDWARE TO BE STAINLESS STEEL.

C4 ATFP & SEISMIC CABLE BRACING ASSEMBLY DETAIL

NOT TO SCALE

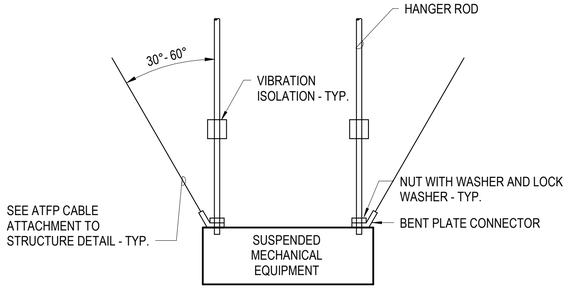

ELEVATION

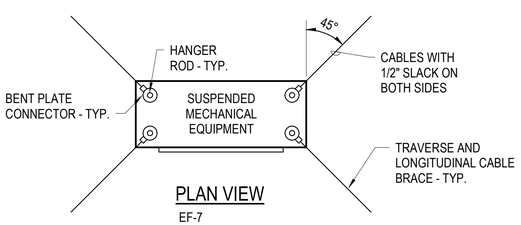

PLAN VIEW

EF-7
EF-8
EF-9
UH-C
RGH-B.1-4

A1 ATFP & SEISMIC BRACING DETAIL FOR SUSPENDED EQUIPMENT RECTANGLE

NOT TO SCALE

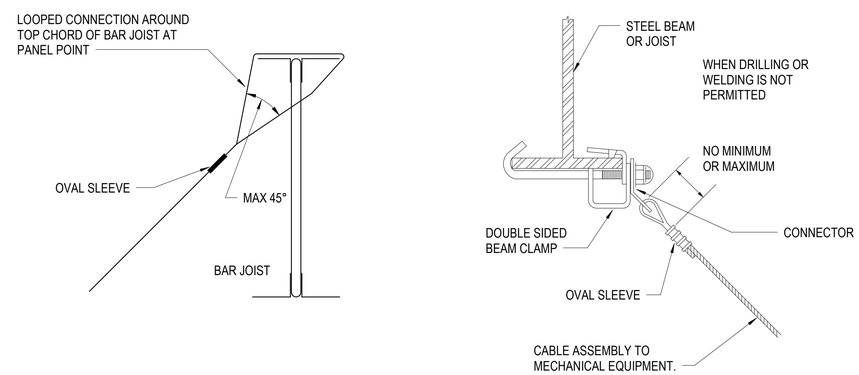

NOTE: ALL HARDWARE TO BE STAINLESS STEEL.

A4 ATFP & SEISMIC CABLE BRACING STRUCTURAL ATTACHMENT

NOT TO SCALE

NOTE:
IF THIS DRAWING IS LESS THAN 34" X 22"
IT IS A REDUCED SIZE DRAWING

1	MOD P00005	05/2023	
2	MOD P00006 AND MOD P00007	10/2025	

STM DESCRIPTION DATE APPR

NAVFAC

JOHN EDWARD BAMFORTH LICENSE No 68893 STATE OF FLORIDA PROFESSIONAL ENGINEER

BAMFORTH ENGINEERS & CONTRACTORS

AE INFO

APPROVED

FOR COMMANDER NAVFAC

ACTIVITY: Approved by J. Scott Roberts, Asset Management Branch Head & Supervisory Facility Planner, PWD Beaufort, SC via email.

SATISFACTORY TO DATE 12/15/2022

DES MAB | DRW MAB | CHK JEB

PM/DM KTB / RLH

BRANCH MANAGER ALG

CHIEF ENG/ARCH EJA

FP ENGINEER DSN

NAVAL FACILITIES ENGINEERING SYSTEMS COMMAND
NORFOLK, VA

DEPARTMENT OF THE NAVY
NAVAL FACILITIES ENGINEERING SYSTEMS COMMAND – MID-ATLANTIC
DC CORE
MCAS BEAUFORT
BEAUFORT, SC

P-475 AIRCRAFT MAINTENANCE HANGAR - VOLUME 3 (OSF OPTION)

OSF / SHOP ANNEX - DUCTWORK DETAILS

SCALE: NOT TO SCALE

EPROJECT NO.: 1363603

CONSTR. CONTR. NO.

NAVFAC DRAWING NO. 12860215

SHEET 1014 OF 1412

OMH504

DRAWFORM REVISION: 25 AUGUST 2020

Autodesk Docs://OMH_TO07 F35 Maintenance Hangar/OMH_F35 Maintenance Hangar_OSF Shop Annex_MEP_v2024.rvt
11/5/2025 8:36:44 AM

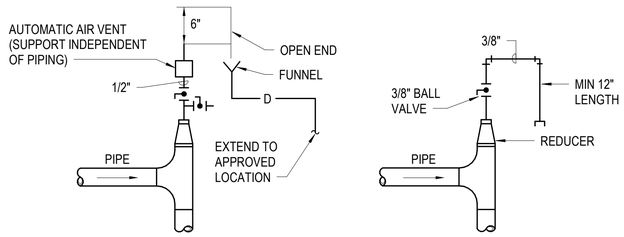

AUTOMATIC AIR VENT

MANUAL AIR VENT

NOTE:
FOR AIR TERMINAL UNIT REHEAT COIL CONNECTIONS TERMINATE DRAIN A MINIMUM OF 12" ABOVE CEILING FOR MAINTENANCE ACCESS.

C1 AIR VENT
NOT TO SCALE

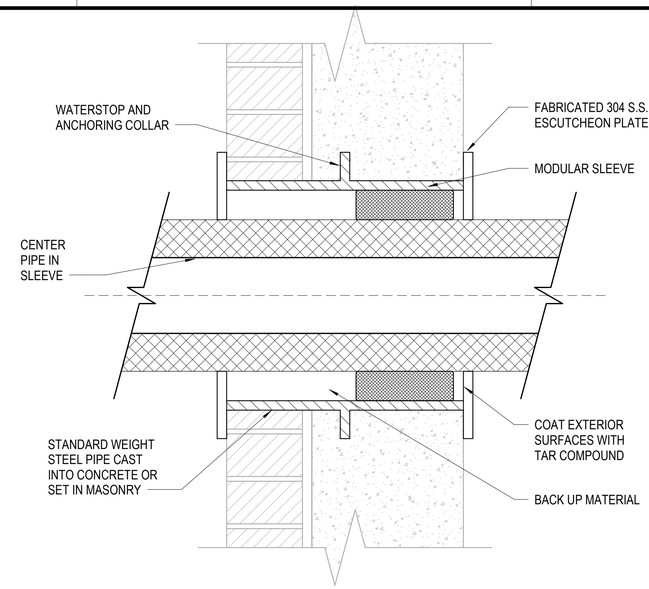

EXTERIOR WALL SECTION

C2 TYPICAL PIPE SLEEVES THROUGH WALLS AND PARTITIONS
NOT TO SCALE

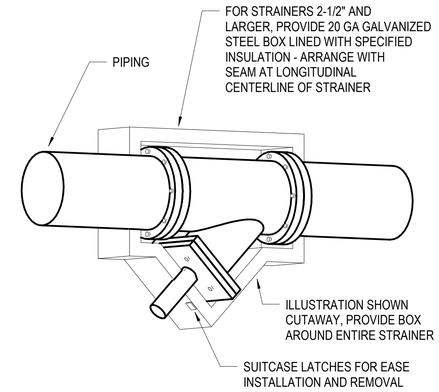

C4 STRAINER INSULATION DIAGRAM-ANGLED VIEW
NOT TO SCALE

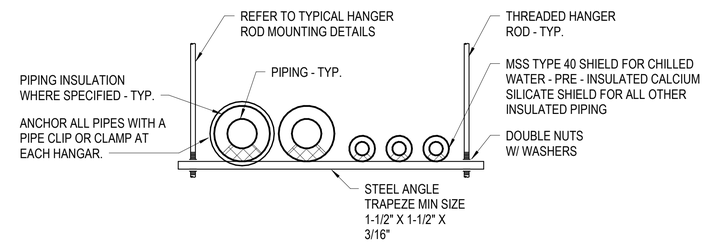

NOTE:
PROVIDE HANGERS SPACED EVENLY NOT TO EXCEED 8'-0" CTR TO CTR FOR ALL HVAC PIPING GROUPS GREATER THAN 36" WIDE AT LOCATIONS WHERE PIPING IS INDICATED TO BE INSTALLED

B4 PIPING HANGER
NOT TO SCALE

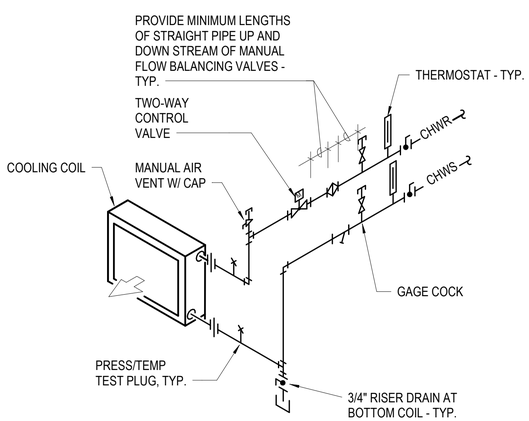

NOTES:
1. INSTALL PIPING TO ALLOW REMOVAL OF COIL FROM UNIT WITH MINIMUM DISRUPTION OF PIPING.
2. PIPE SUPPLY/RETURN IN COUNTERFLOW CONFIGURATION TO AIRFLOW.
3. PROVIDE FOR EACH AHU CHILLED WATER COIL. INDICATED AS NON-VERTICAL SPLIT CONFIGURATION.

A1 HYDRONIC COIL DIAGRAM WITH 2-WAY VALVE
NOT TO SCALE

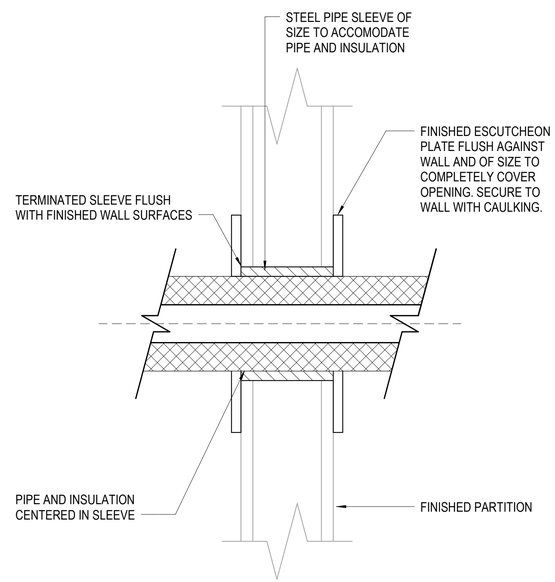

EXPOSED PIPE INTERIOR WALL SECTION

A2 TYPICAL PIPE SLEEVES THROUGH WALLS AND PARTITIONS
NOT TO SCALE

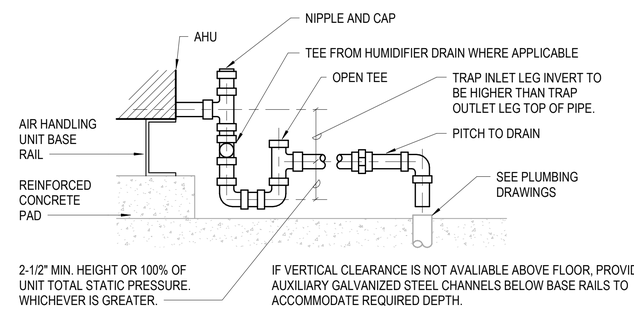

NOTE:
PROVIDE CONDENSATE DRAIN FROM EACH AHU COOLING COIL DRAIN PAN FULL SIZE OF DRAIN PAN OUTLET. EXTEND TO FLOOR DRAIN ADJACENT TO UNIT SERVED. COORDINATE LOCATION WITH PLUMBING.

A4 CONDENSATE TRAP
NOT TO SCALE

NOTE:
IF THIS DRAWING IS LESS THAN 34" X 22"
IT IS A REDUCED SIZE DRAWING

SYM	DESCRIPTION	DATE	APPR
1	MOD P00005	05/2023	
2	MOD P00006 AND MOD P00007	10/2025	

NAVFAC

JOHN EDWARD BALL
LICENSE
No 66893
STATE OF
FLORIDA
PROFESSIONAL ENGINEER
SEAL

BAMFORTH
ENGINEERS CONTRACTORS

A/E INFO

APPROVED
FOR COMMANDER NAVFAC

ACTIVITY
Approved by J. Scott Roberts,
Asset Management Branch Head &
Supervisory Facility Planner, PWD
Beaufort, SC via email.

SATISFACTORY TO DATE 12/15/2022

DES	MAB	DRW	MAB	CHK	JEB
PMDM	KTB / RLH				
BRANCH MANAGER	ALG				
CHIEF ENG/ARCH	EJA				
FP ENGINEER	DSN				

DEPARTMENT OF THE NAVY
NAVAL FACILITIES ENGINEERING SYSTEMS COMMAND
DC CODE:
MCAS BEAUFORT

NAVAL FACILITIES ENGINEERING SYSTEMS COMMAND ~ MID-ATLANTIC
NORFOLK, VA

BEAUFORT, SC

P-475 AIRCRAFT MAINTENANCE HANGAR - VOLUME 3 (OSF OPTION)

OSF / SHOP ANNEX - PIPING DETAILS

SCALE: As indicated
EPROJECT NO.: 1363603
CONSTR. CONTR. NO.
NAVFAC DRAWING NO. 12860216
SHEET 1015 OF 1412

OMP501

DRAWFORM REVISION: 25 AUGUST 2020

Autodesk Docs://2042 MFA1 302 FB Maintenance Hangar/2042 F35 Maint Hangar_OSF Shop Annex_ME-U0024.rvt
11/5/2025 8:36:40 AM

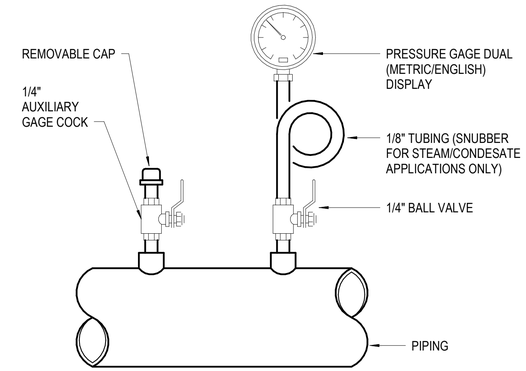

NOTES:
1. PROVIDE AUXILIARY GAGE COCK AT EACH PRESSURE GAGE LOCATION.
2. INSTALL PRESSURE GAGES (AND SNUBBERS) IN VERTICAL POSITION - ADD ELBOW FOR VERTIAL PIPING.

C4 PIPING PRESSURE GAGE

NOT TO SCALE

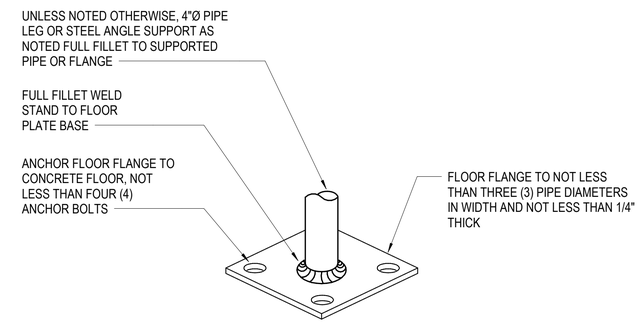

NOTE:
PRIME AND PAINT FLOOR BASE PLATES AND STANDS

B4 BASE PLATE FOR USE AS PIPE STANCHION

NOT TO SCALE

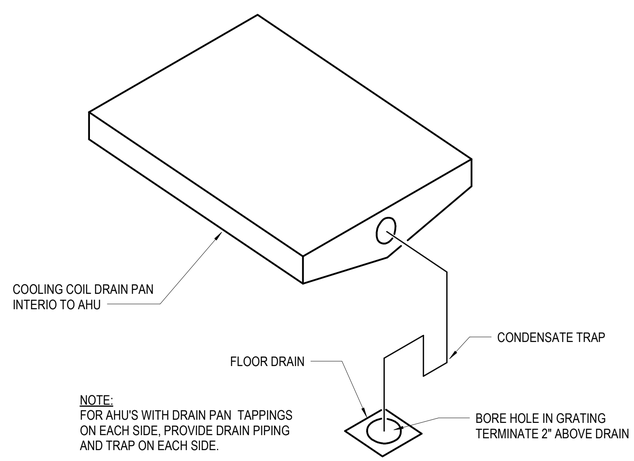

NOTE:
FOR AHU'S WITH DRAIN PAN TAPPINGS ON EACH SIDE, PROVIDE DRAIN PIPING AND TRAP ON EACH SIDE.

A2 AHU COOLING COIL DRAIN PAN

NOT TO SCALE

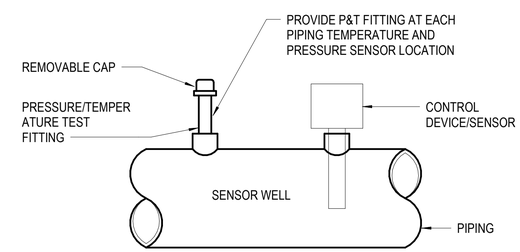

SIDE ELEVATION

NOTE:
PROVIDE P&T FITTINGS AT ADDITIONAL LOCATIONS INDICATED ON COIL AND EQUIPMENT CONNECTION DETAILS.

A4 PIPING PRESSURE/TEMPERATURE TEST FITTING

NOT TO SCALE

NOTE:
IF THIS DRAWING IS LESS THAN 34" X 22"
IT IS A REDUCED SIZE DRAWING

SYM	DESCRIPTION	DATE	APPR
1	MOD P00005	05/2023	
2	MOD P00006 AND MOD P00007	10/2025	

NAVFAC

JOHN EDWARD BAILEY LICENSE No 66893 STATE OF FLORIDA PROFESSIONAL ENGINEER

BAMFORTH ENGINEERS & CONTRACTORS

AE INFO

APPROVED
FOR COMMANDER NAVFAC 11/21/2025

ACTIVITY
Approved by J. Scott Roberts, Asset Management Branch Head & Supervisory Facility Planner, PWD Beaufort, SC via email.

SATISFACTORY TO DATE 12/15/2022

DES	MAB	DRW	MAB	CHK	JEB

PM/DM	KTB / RLH
BRANCH MANAGER	ALG
CHIEF ENG/ARCH	EJA
FP ENGINEER	DSN

DEPARTMENT OF THE NAVY
NAVAL FACILITIES ENGINEERING SYSTEMS COMMAND
DC-CORE
NAVAL FACILITIES ENGINEERING SYSTEMS COMMAND ~ MID-ATLANTIC NORFOLK, VA
MCAS BEAUFORT
BEAUFORT, SC
P-475 AIRCRAFT MAINTENANCE HANGAR - VOLUME 3 (OSF OPTION)
OSF / SHOP ANNEX - PIPING DETAILS

SCALE: NOT TO SCALE
EPROJECT NO.: 1363603
CONSTR. CONTR. NO.
NAVFAC DRAWING NO. 12860217
SHEET 1016 OF 1412

OMP502

DRAWFORM REVISION: 25 AUGUST 2020

Autodesk Docs://OM21 VMFAT 502 F35 Maintenance Hangar/OM21 F35 Maint Hangar_OSF Shop Annex_ME v2024.rvt
11/5/2025 8:36:45 AM

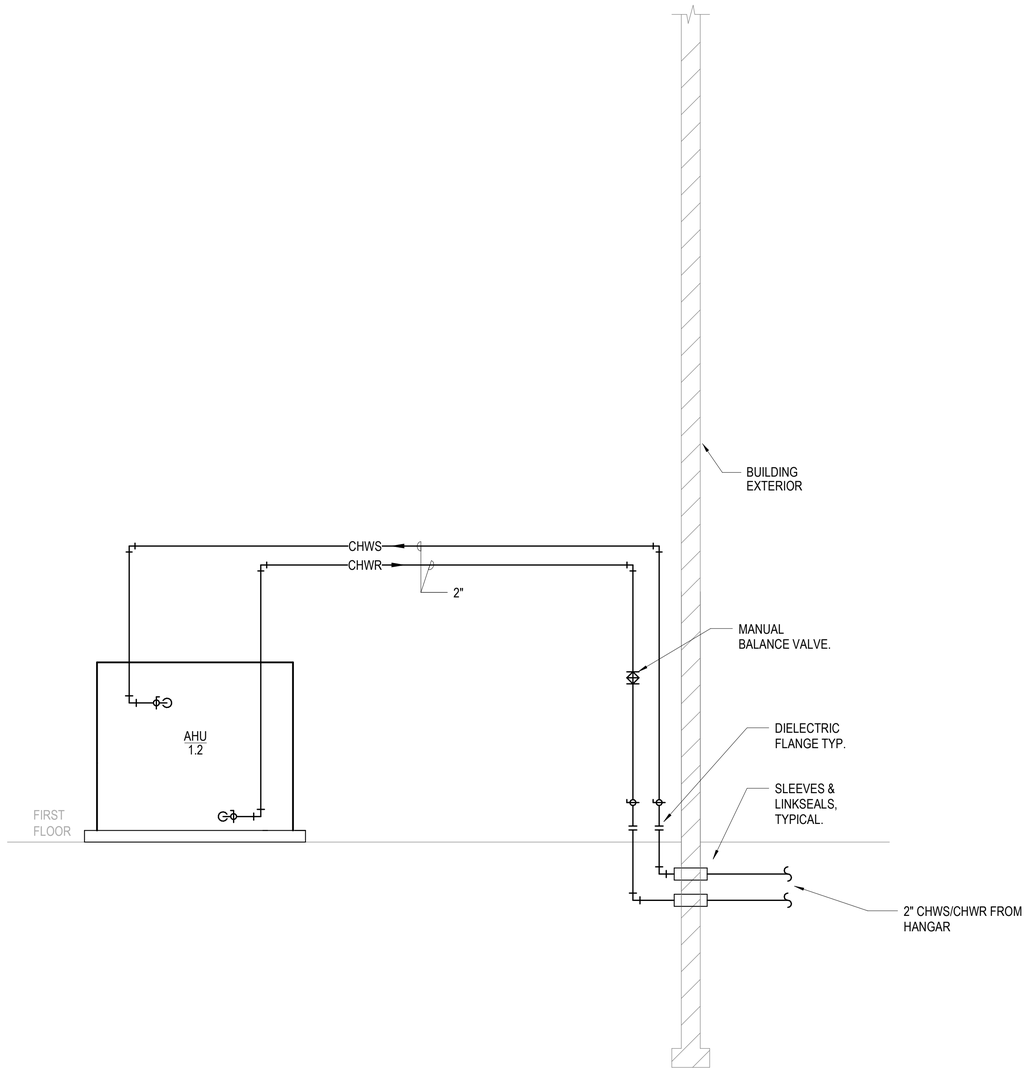

A1 SCHEMATIC FLOW DIAGRAM - OSF - CHILLED WATER SYSTEM

NOT TO SCALE

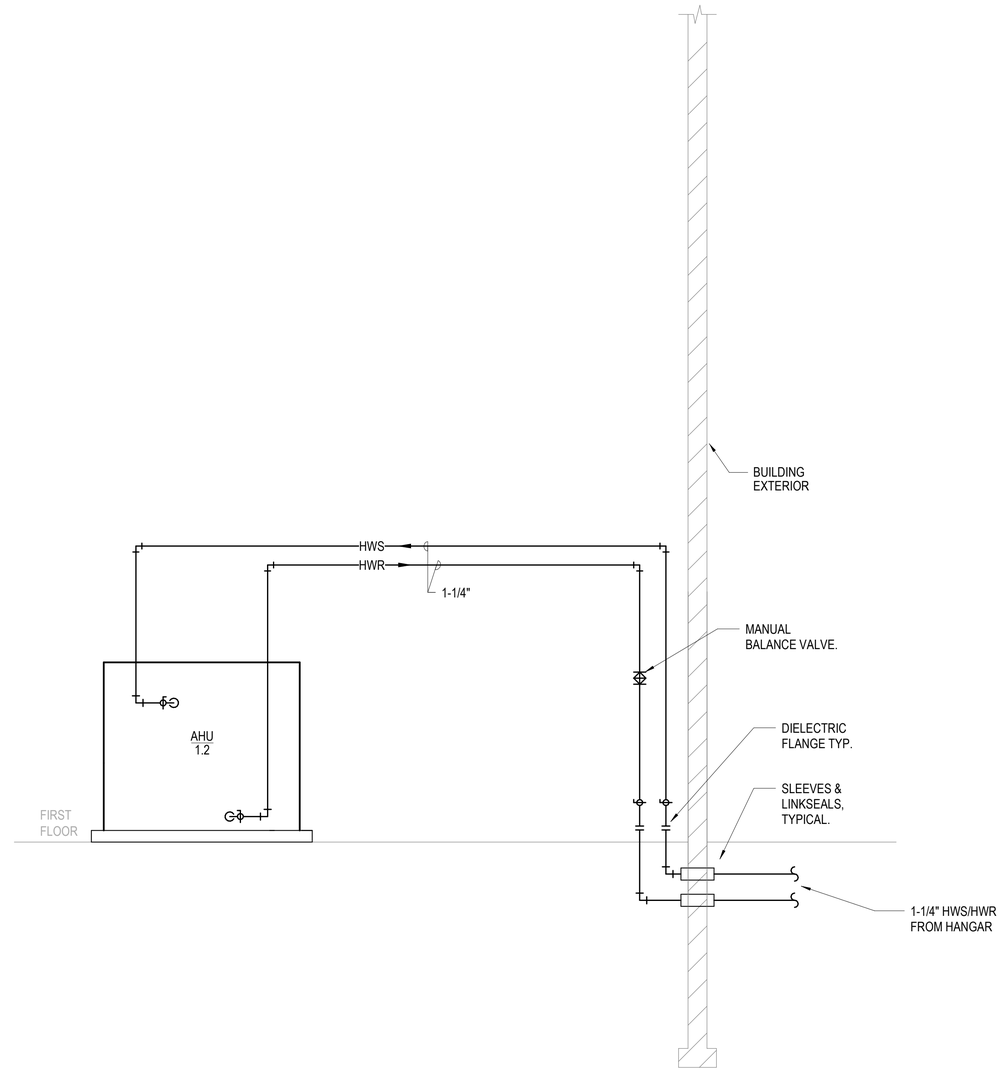

A3 SCHEMATIC FLOW DIAGRAM - OSF - HEATING WATER SYSTEM

NOT TO SCALE

NOTE:
IF THIS DRAWING IS LESS THAN 34" X 22"
IT IS A REDUCED SIZE DRAWING

SYM	DESCRIPTION	DATE	APPR
1	MOD P00005	05/2023	
2	MOD P00006 AND MOD P00007	10/2025	

NAVFAC

JOHN EDWARD BAILEY LICENSE No 68893 STATE OF FLORIDA PROFESSIONAL ENGINEER

BAMFORTH ENGINEERS & CONTRACTORS

AE INFO

APPROVED

FOR COMMANDER NAVFAC 11/21/2025

ACTIVITY: Approved by J. Scott Roberts, Asset Management Branch Head & Supervisory Facility Planner, PWD Beaufort, SC via email.

SATISFACTORY TO DATE: 12/15/2022

DES	MAB	DRW MAB	CHK JEB
PM/DM			KTB / RLH
BRANCH MANAGER			ALG
CHIEF ENG/ARCH			EJA
FP ENGINEER			DSN

DEPARTMENT OF THE NAVY
NAVAL FACILITIES ENGINEERING SYSTEMS COMMAND
DC CORE:
MCAS BEAUFORT

NAVAL FACILITIES ENGINEERING SYSTEMS COMMAND – MID-ATLANTIC
NORFOLK, VA

BEAUFORT, SC

P-475 AIRCRAFT MAINTENANCE HANGAR - VOLUME 3 (OSF OPTION)

OSF / SHOP ANNEX - SCHEMATIC FLOW DIAGRAMS

SCALE: NOT TO SCALE

EPROJECT NO.: 1363603

CONSTR. CONTR. NO.

NAVFAC DRAWING NO. 12860218

SHEET 1017 OF 1412

OMH601

DRAWFORM REVISION: 25 AUGUST 2020

Autodesk Docs://20042 VMF A1 302 F8 Maintenance Hangar/20042 F35 Maint Hangar_OSF Shop Annex_MEc/0204.rvt
11/5/2025 8:36 AM

SYMBOLS

FAN	
PUMP	
HEAT TRANSFER COIL	
AIR FILTER SECTION	
90% AIR FILTER SECTION	
AIR BLENDER	
UVC EMITTERS	
DM	MOTOR ACTUATED CONTROL DAMPER
M	MOTOR ACTUATED VALVE
FM	INSERTION TYPE FLOW METER
— BCN —	BUILDING CONTROL NETWORK CABLE FOR DDC SYSTEM
— B —	BACKBONE CABLE FOR DDC SYSTEM
— CW —	DOMESTIC COLD WATER
N.O.	NORMALLY OPEN DEVICE ON POWER FAILURE
N.C.	NORMALLY CLOSED DEVICE ON POWER FAILURE
DC-XX	DIGITAL CONTROLLER MARK (DDC SYSTEM) — CONTROLLER NUMBER
CT / 1	EQUIPMENT TYPE / EQUIPMENT NUMBER — EQUIPMENT MARK

DDC SYSTEM DEVICE IDENTIFIERS

AFMS	AIR FLOW MEASURING STATION
CGV	COMBUSTION GAS VALVE
CS	CURRENT SENSOR
CT	CURRENT TRANSDUCER
CN	POWER CONTACTOR INTEGRAL TO EQUIPMENT (DIV 22 OR 23)
DM	DAMPER MOTOR - ELECTRIC
DPS	DIFFERENTIAL PRESSURE SWITCH
DPT	DIFFERENTIAL PRESSURE TRANSDUCER
ES	ELECTRONIC PROBE WATER SENSOR
FACM	FIRE ALARM CONTROL MODULE
FM	FLOW METER
FT	FREEZE THERMOSTAT
HGP	HIGH GAS PRESSURE
HS	HUMIDITY SENSOR
HWT	HIGH WATER TEMERATURE
LAP	LOW AIR PRESSURE
LD	LEAK DETECTION SENSOR
LGP	LOW GAS PRESSURE
LS	PROBE TYPE LEVEL SENSOR
MC	MOTOR CONTACTOR
PB	PUSH BUTTON
PS	PRESSURE SENSOR
RHL	RELATIVE HUMIDITY HIGH LIMIT SWITCH
RL	RELAY
SD	DUCT SMOKE DETECTOR (DIV 28) INSTALLED BY DIV 23
SM	MANUAL MOTOR STARTER (DIV 26)
SPL	STATIC PRESSURE HIGH LIMIT
SPT	STATIC PRESSURE TRANSDUCER
STR	MAGNETIC MOTOR STARTER (DIV 26)
SW	SWITCH
TS	TEMPERATURE SENSOR
VFD	VARIABLE FREQUENCY DRIVE (DIV 26)
VM	VALVE MOTOR - ELECTRIC
BAC	NATIVE BACNET CONNECTION

HVAC	DESIGNATION
AB	AIR BLENDER
AD	AIR DAMPER
ADD	ADDITION
BC	BUILDING CONTROLLER
CAV	CONSTANT AIR VOLUME
CN	CONTACTOR
CV	CONTROL VALVE
DA	DAMPER ACTIVATOR
DC	DIGITAL CONTROLLER
DDC	DIRECT DIGITAL CONTROL
DPS	DIFFERENTIAL PRESSURE SWITCH
DPT	DIFFERENTIAL PRESSURE TRANSMITTER
DTS	DATA TERMINAL STRIP
EF	EXHAUST FAN
FA	FIRE ALARM
HGP	HIGH GAS PRESSURE SWITCH

HVAC	DESIGNATION
IP	DDC INPUT POINT
LAN	LOCAL AREA NETWORK
LGP	LOW GAS PRESSURE SWITCH
LT	LEVEL TRANSMITTER
MGV	SLOW OPENING GAS VALVE
NC	NORMALLY CLOSED
NO	NORMALLY OPEN
OP	DDC OUTPUT POINT
PGV	SLOW OPENING MOTORIZED PILOR GAS VALVE
SF	SUPPLY FAN
TS	TEMPERATURE SENSOR
VAV	VARIABLE AIR VOLUME
VLV	VALVE

GENERAL NOTES - CONTROL DRAWINGS

1. UNLESS NOTED OTHERWISE, PROVIDE WORK INDICATED ON THE "MI" SERIES DRAWINGS AS PART OF THE DIRECT DIGITAL CONTROL SYSTEM. EQUIPMENT SHALL BE CONTROLLED THROUGH THE DIRECT DIGITAL CONTROL (DDC) SYSTEM. PROVIDE SENSORS, ACTUATORS, DAMPERS, VALVES, CONTROLLERS, CONTROL PANELS, WIRING, ELECTRICAL POWER TRANSFORMERS FOR DDC SYSTEM LOADS (ACTUATORS/ACCESSORIES), OPERATING SOFTWARE, GRAPHIC SOFTWARE, PROGRAMMING, SYSTEM CALIBRATION AND START-UP TESTING FOR A COMPLETE AND OPERATIONAL SYSTEM. REFER TO SPECIFICATIONS FOR ADDITIONAL REQUIREMENTS.
2. PROVIDE QUANTITY OF CONTROLLERS AND CONTROL PANELS INDICATED. CONTROLLERS INDICATED ON THE DDC ARCHITECTURE SCHEMATIC REPRESENT THE MINIMUM QUANTITY REQUIRED.
3. AT EACH CONTROLLER LOCATION, PROVIDE A HINGED METAL CONTROLLER ENCLOSURE TO HOUSE THE CONTROLLER, ASSOCIATED RELAYS, POWER TRANSFORMERS, DISCONNECT SWITCH, WIRING TERMINAL BLOCKS AND ACCESSORIES. PROVIDE HINGED METAL ENCLOSURES TO HOUSE POWER TRANSFORMERS REQUIRED FOR DDC CONTROLLERS AND DDC SYSTEM ACCESSORIES REMOTE FROM THE EQUIPMENT CONTROLLERS.
4. FOR EACH VARIABLE FREQUENCY DRIVE MOTOR STARTER PROVIDE A DIRECT BACNET INTERFACE OR BACNET GATEWAYFOR EACH TO ENABLE COMMUNICATION BETWEEN THE EQUIPMENT AND THE DDC SYSTEM. ADDITIONALLY, PROVIDE DIRECT INTERLOCK WIRING BETWEEN EQUIPMENT AND THE DDC SYSTEM. COORDINATE WORK RESPONSIBILITIES BETWEEN THE DDC SYSTEM AND THE EQUIPMENT INSTALLERS TO ENABLETHE SEQUENCES OF OPERATION.
5. SMOKE DETECTORS INDICATED IN THE FACILITY AIRSIDE SYSTEMS ARE FURNISHED AS PART OF DIV 28 THE FIRE ALARM SYSTEM, INSTALLED IN THE DUCT SYSTEMS BY THE MECHANICAL INSTALLER, WIRED BY THE FIRE ALARM INSTALLER. FIRE ALARM CONTROL MODULES ARE FURNISHED AND INSTALLED BY THE FIRE ALARM INSTALLER. COORDINATE DDC CONTROL AND SUPERVISORY POINTS, AND FIRE ALARM SHUTDOWN PROTOCOLS WITH THE FIRE ALARM INSTALLER TO ENABLE SEQUENCES OF OPERATION.
6. FIRE ALARM CONTROL MODULES FOR AHUS AND CAC UNITS SHUTDOWN FURNISHED BY DIV 28 ARE REVERSE ACTING TWO-POLE – ONE POLE FOR USE BY THE FIRE ALARM SYSTEM (COMMAND), ONE POLE FOR USE BY THE DDC SYSTEM (SUPERVISION). REFER TO THE FIRE ALARM CONTRACT DRAWINGSFOR DIVISION OF WORK AND WIRING RESPONSIBILITIES.

GENERAL NOTES - CONTROL DRAWINGS (CONT.)

7. SEQUENCES OF OPERATION INCLUDE DESCRIPTIVE NOTES, SETPOINTS AND ADDITIONAL HARDWARE ITEMS REQUIRING INTEGRATION TO THE CONTROL SYSTEM. PROVIDE OPERATION AS NOTED IN SEQUENCES AS WELL AS MISCELLANEOUS HARDWARE/SOFTWARE ITEMS ANNOTATED IN SEQUENCES.
8. THE CONTROL SEQUENCES DO NOT DECRIBE EACH SYSTEM FAILURE MODE AND THE PROCESSES REQUIRED FOR RECOVERY OF EACH SYSTEM AFTER A NORMAL POWER OUTAGE. FOR EACH SYSTEM, UPON A LOSS OF NORMAL POWER, DISABLE THE SYSTEM AND RETURN TO A FULLY "OFF" OR "UNOCCUIPED" MODE. WHEN EITHER NORMAL POWER OR EMEGENCY (STANDBY) POWER IS PROVIDED (ELECTRICAL POWER IS RESTORED), PROVIDE AUTOMATIC RESTART OF EQUIPMENT AND SYSTEM COMPONENTS AS APPLICABLE TO THE TYPE (NORMAL OR EMERGENCY) OF POWER FEED.
9. POINTS INDICATED ARE AN ABBREVIATED LIST AND PROVIDED FOR REFERENCE ONLY. REFER TO THE FULL EDITED POINTS SCHEDULE FILES IN MICROSOFT EXCEL FORMAT, AVAILABLE UPON WRITTEN REQUEST TO THE CONTRACTING OFFICER REPRESENTATIVE. REFER TO DOCUMENT UFC 3-410-02 FOR ADDITIONAL POINTS SCHEDULE GENERAL INFORMATION AND REQUIREMENTS.

NOTE:
PROVIDE MINIMUM QUANTITY OF DIGITAL CONTROLLERS AND CONTROLLER ENCLOSURES AS INDICATED. COMBINING CONTROLLER AND/OR ENCLOSURES IS NOT ACCEPTABLE, TYPICAL.

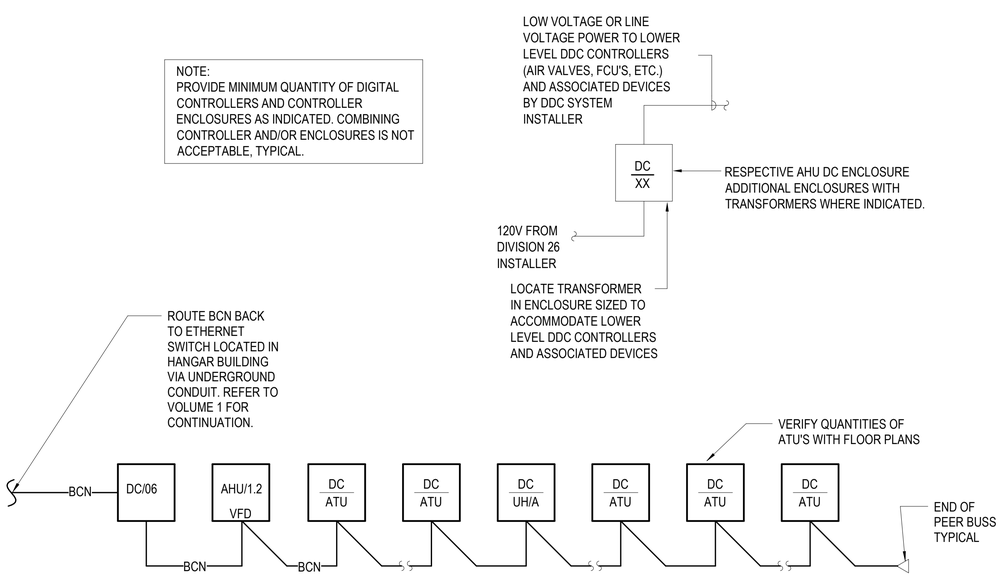

A1 SCHEMATIC CONTROL DIAGRAM - DDC ARCH
NOT TO SCALE

NOTE:
IF THIS DRAWING IS LESS THAN 34" X 22"
IT IS A REDUCED SIZE DRAWING

STM	DESCRIPTION	DATE	APPR
1	MOD P00005	05/2023	
2	MOD P00006 AND MOD P00007	10/2025	

NAVFAC

JOHN EDWARD BAILEY LICENSE No 66893 STATE OF FLORIDA PROFESSIONAL ENGINEER

BAMFORTH ENGINEERS & CONTRACTORS

AE INFO

APPROVED
FOR COMMANDER NAVFAC 11/21/2025
ACTIVITY: Approved by J. Scott Roberts, Asset Management Branch Head & Supervisory Facility Planner, PWD Beaufort, SC via email.
SATISFACTORY TO DATE 12/15/2022

DES MAB	DRW MAB	CHK JEB	
PM/DM	KTB / RLH		
BRANCH MANAGER	ALG		
CHIEF ENG/ARCH	EJA		
FP ENGINEER	DSN		

DEPARTMENT OF THE NAVY
NAVAL FACILITIES ENGINEERING SYSTEMS COMMAND
DC CORE: MCAS BEAUFORT
NAVAL FACILITIES ENGINEERING SYSTEMS COMMAND – MID-ATLANTIC NORFOLK, VA
BEAUFORT, SC
P-475 AIRCRAFT MAINTENANCE HANGAR - VOLUME 3 (OSF OPTION)
OSF - CONTROLS - SYMBOLS, NOTES, AND DDC ARCHITECTURE

SCALE: NOT TO SCALE
EPROJECT NO.: 1363603
CONSTR. CONTR. NO.
NAVFAC DRAWING NO. 12860219
SHEET 1018 OF 1412
OMI701
DRAWFORM REVISION: 25 AUGUST 2020

Autodesk Docs://0304_MFA1 302 F8 Maintenance Hangar/0304_F8 Maintenance Hangar_OSF Shop Annex_MEP_v2024.rvt
11/5/2025 8:36:47 AM

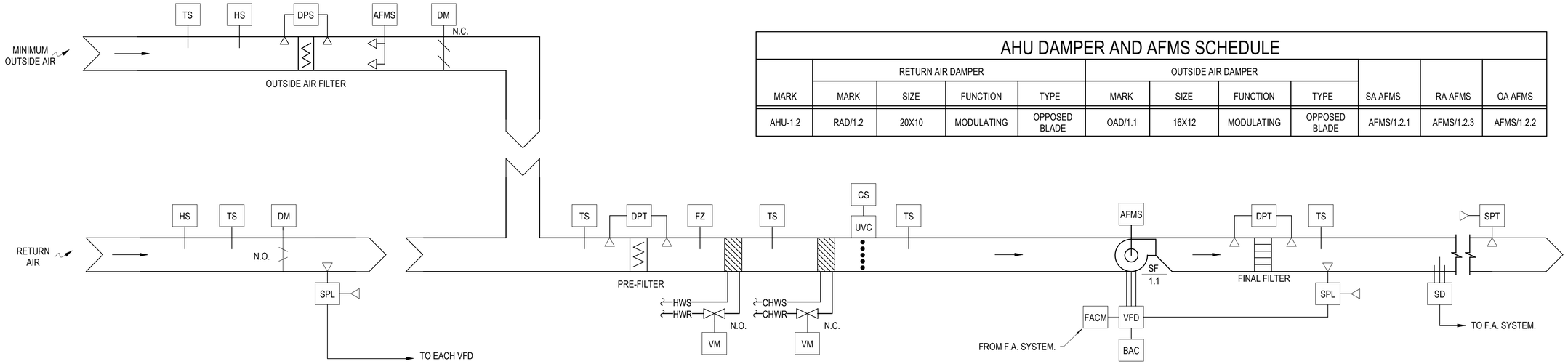

AHU DAMPER AND AFMS SCHEDULE

MARK	RETURN AIR DAMPER				OUTSIDE AIR DAMPER				SA AFMS	RA AFMS	OA AFMS
	MARK	SIZE	FUNCTION	TYPE	MARK	SIZE	FUNCTION	TYPE			
AHU-1.2	RAD/1.2	20X10	MODULATING	OPPOSED BLADE	OAD/1.1	16X12	MODULATING	OPPOSED BLADE	AFMS/1.2.1	AFMS/1.2.3	AFMS/1.2.2

A1 SCHEMATIC CONTROL DIAGRAM - VAV AHU, SINGLE SUPPLY FAN

NOT TO SCALE

SUPPLY DUCT STATIC PRESSURE SETPOINT SCHEDULE

MARK	STATIC PRESSURE (IN. W.C.)
AHU-1.2	3.5

SUPPLY AIR TEMPERATURE (SAT) SETPOINT SCHEDULE

MARK	MIN. SAT (°F)	MAX. SAT (°F)
AHU-1.2	55	65

AHU OCCUPANCY SCHEDULE

MARK	AREA SERVED	OCCUPIED MODE	UNOCCUPIED MODE	AHU WARMUP/COOLDOWN MODE	# OF ATU OVERRIDE BUTTONS TO PUT AHU SYSTEM IN OCCUPIED MODE
AHU-1.1	LEVEL 1	0600-1800	1800-0600	0530-0600	2

VARIABLE AIR VOLUME AIR HANDLER NO RETURN FAN SEQUENCE OF OPERATION

OCCUPANCY MODES

SYSTEM SHALL OBTAIN ITS OCCUPANCY MODE INPUT FROM THE SYSTEM SCHEDULE AS INDICATED. THE SYSTEM SHALL OPERATE ONE OF THE FOLLOWING MODES: OCCUPIED, UNOCCUPIED, OR WARM UP/COOL DOWN.

SYSTEM ENABLE AND LOOP ENABLE

OCCUPIED MODE: THE SUPPLY FAN SHALL BE ENABLED AND COMMANDED TO RUN. ALL CONTROL LOOPS SHALL BE ENABLED. THE DOAS SYSTEM SHALL BE ENABLED.

UNOCCUPIED MODE: WHILE SPACE TEMPERATURES ARE WITHIN THE LOW LIMIT AND HIGH LIMIT SETPOINTS ALL CONTROL LOOPS SHALL BE DISABLED AND THE SUPPLY FAN SHALL NOT RUN. WHEN SPACE TEMPERATURES ARE OUTSIDE THE LOW LIMIT AND HIGH LIMIT SETPOINTS THE SUPPLY FAN SHALL BE ENABLED AND COMMENDED TO RUN, THE SUPPLY DUCT STATIC PRESSURE CONTROL, SUPPLY AIR TEMPERATURE CONTROL LOOPS SHALL BE ENABLED. THE DOAS SYSTEM SHALL BE DISABLED.

WARM UP/COOL DOWN: THE SUPPLY FAN SHALL BE ENABLED AND COMMANDED TO RUN. THE DOAS SYSTEM SHALL BE DISABLED AND ALL OTHER CONTROL LOOPS SHALL BE ENABLED.

EMERGENCY AIR DISTRIBUTION SHUTOFF

ENABLED FROM THE EMERGENCY AIR DISTRIBUTION SHUTOFF PANEL, REFERENCE SEQUENCE OF OPERATION.

HAND – OFF – AUTO (H-O-A) SWITCHES

SUPPLY FAN VFD

HAND: WITH THE H-O-A SWITCH IN THE HAND POSITION, THE SUPPLY FAN SHALL START AND RUN CONTINUOUSLY, SUBJECT TO SAFETIES AND DAMPER PROOFS. FAN SPEED SHALL BE UNDER MANUAL OPERATOR CONTROL.

OFF: WITH THE H-O-A SWITCH IN THE OFF POSITION, THE SUPPLY FAN SHALL STOP.

AUTO: WITH THE H-O-A SWITCH IN THE AUTO POSITION, THE SUPPLY FAN SHALL START AND RUN SUBJECT TO THE SUPPLY FAN START/STOP SIGNAL AND SAFETIES AND DAMPER PROOFS. FAN SPEED SHALL BE UNDER CONTROL OF THE DDC HARDWARE.

PROOFS AND SAFETIES

THE SUPPLY FAN, RETURN FAN, AND ALL DDC HARDWARE CONTROL LOOPS SHALL BE SUBJECT TO PROOFS AND SAFETIES. SAFETIES SHALL BE DIRECT-HARDWIRE INTERLOCKED TO THE VFD. DDC HARDWARE SHALL MONITOR ALL PROOFS AND SAFETIES AND FAILURE OF ANY PROOF OR ACTIVATION OF ANY SAFETY SHALL RESULT IN ALL CONTROL LOOPS BEING DISABLED AND THE AHU FAN BEING COMMANDED OFF UNTIL RESET.

MANUAL RESET BUTTON

PROVIDE MANUAL RESET BUTTON AT THE RESPECTIVE AHU CONTROL PANEL. ACTIVATION OF ANY SAFETY WILL RESULT IN SYSTEM SHUTDOWN. THE SYSTEM REMAINS SHUTDOWN UNTIL MANUALLY RESET DEVICES ARE RESET AND A MANUAL RESET BUTTON, LOCAL TO THE DDC CONTROLLER, IS PRESSED.

SUPPLY DUCT STATIC PRESSURE CONTROL

WHEN THIS LOOP IS ENABLED THE DDC HARDWARE SHALL MODULATE THE SUPPLY FAN VFD TO MAINTAIN THE DUCT STATIC PRESSURE AT SETPOINT, AS INDICATED IN AHU SCHEDULE, AS SHOWN (COORDINATE ACTUAL SETPOINT REQUIRED WITH TEST AND BALANCE PERSONNEL), AS MEASURED BY THE DUCT STATIC PRESSURE TAP AND SENSOR AS SHOWN. AFTER A SOFTWARE TIMER OF 5 MINUTES (ADJUSTABLE) THE SUPPLY AIR PRESSURE RESET ALGORITHM SHALL BE ENABLED; STATIC PRESSURE SHALL BE RESET USING TRIM AND RESPOND LOGIC WITHIN THE DUCT PRESSURE RANGE OF 0.20 TO 1.5 (COORDINATE WITH TAB) INCHES W.G. WHILE THE FAN STATUS IS PROVEN ON, EVERY TWO MINUTES (ADJUSTABLE), DECREASE THE SETPOINT BY 0.04 (ADJUSTABLE) INCHES W.G. IF THERE ARE TWO OR FEWER PRESSURE REQUESTS. IF THERE ARE MORE THAN TWO (ADJUSTABLE) PRESSURE REQUESTS, INCREASE THE SETPOINT BY 0.06 (ADJUSTABLE) INCHES W.G. TIMES THE NUMBER OF PRESSURE REQUEST LESS TWO EVERY TWO MINUTES (ADJUSTABLE). WHEN THIS LOOP IS DISABLED, THE DDC HARDWARE CAPACITY MODULATION OUTPUT TO THE VFD SHALL BE ZERO PRESENT.

MINIMUM VFD SPEED SHALL BE 15 HERTZ (ADJUSTABLE), COORDINATE WITH VFD MANUFACTURER.

UNOCCUPIED MODE AND WARM UP/COOL DOWN MODE: THE DDC THROUGH THE VARIABLE FREQUENCY DRIVE SHALL LIMIT SUPPLY FAN SPEED AS FOLLOWS; DESIGN SUPPLY AIRFLOW MINUS OUTSIDE AIRFLOW EQUALS HIGH LIMIT (MAXIMUM) UNOCCUPIED AND WARM UP / COOL DOWN MODE SUPPLY AIRFLOW.

PRESSURE REQUEST INPUT FROM SYSTEM VAV TERMINAL UNITS, REFERENCE SEQUENCE OF OPERATION.

PROVIDE TOGGLE ON AHU GRAPHIC SCREEN FOR SUPPLY AIR PRESSURE RESET CONTROL ALGORITHM "AUTO (ON)" OR "OFF".

RETURN AIR / OUTSIDE AIR CONTROL

WHEN THIS LOOP IS ENABLED THE DDC HARDWARE SHALL FULLY OPEN THE OUTSIDE AIR DAMPER AND MODULATE THE RETURN AIR DAMPER TO MAINTAIN SCHEDULED OUTSIDE AIR. PROVIDE ALARM WHEN OUTSIDE AIR FLOW DROPS BELOW 10 PERCENT OF SETPOINT.

UNOCCUPIED MODE AND WARM UP / COOL DOWN MODE: THE RETURN AIR DAMPER SHALL FULLY OPEN. DISABLE OUTSIDE AIR CONTROL DAMPER.

SUPPLY AIR TEMPERATURE CONTROL

WHEN THIS LOOP IS ENABLED THE DDC HARDWARE SHALL MODULATE THE COOLING COIL VALVE TO MAINTAIN THE SUPPLY AIR TEMPERATURE SETPOINT, 55 DEGREES (ADJUSTABLE), AS SHOWN. WHEN THIS LOOP IS DISABLED, THE COOLING COIL VALVE SHALL BE CLOSED.

DURING WARM-UP MODE THE SUPPLY AIR TEMPERATURE SETPOINT SHALL BE SET TO T-MAXIMUM (65 DEGREES F ADJUSTABLE).

DURING COOL-DOWN MODE THE SUPPLY AIR TEMPERATURE SETPOINT SHALL BE SET TO T-MINIMUM (55 DEGREES F ADJUSTABLE).

SUPPLY AIR TEMPERATURE RESET CONTROL

WHEN THIS LOOP IS ENABLED, THE SETPOINT IS RESET FROM T-MIN (55 DEGREES F) PROPORTIONALLY UP TO T-MAX (65 DEGREES F). T-MAX SHALL BE RESET USING TRIM AND RESPOND LOGIC WITHIN THE RANGE 55 DEGREES F TO 65 DEGREES F. WHEN THE FAN IS OFF, FREEZE T-MAX AT THE MAXIMUM VALUE (65 DEGREES F). WHILE FAN IS PROVEN ON, EVERY TWO MINUTES, INCREASE THE SETPOINT BY 0.2 DEGREES F IF THERE ARE TWO (ADJUSTABLE) OR FEWER ZONE COOLING REQUESTS. IF THERE ARE MORE THAN TWO (ADJUSTABLE) COOLING REQUESTS OR THE RETURN AIR IS AT 55% RH OR ABOVE, DECREASE THE SETPOINT BY 0.3 DEGREES F TIMES THE NUMBER OF COOLING REQUEST LESS TWO EVERY TWO MINUTES (ADJUSTABLE).

COOLING REQUEST INPUT FROM SYSTEM VAV TERMINAL UNITS, REFERENCE SEQUENCE OF OPERATION.

GENERATE TWO (ADJUSTABLE) COOLING REQUESTS FOR EVERY ONE PERCENT RELATIVE HUMIDITY AT 55% RH AND ABOVE (ADJUSTABLE) AS SENSED AT THE RETURN AIR HUMIDITY SENSOR.

PROVIDE TOGGLE ON AHU GRAPHIC SCREEN FOR SUPPLY AIR TEMPERATURE RESET CONTROL ALGORITHM "AUTO (ON)" AND "OFF".

UVC EMITTERS

PROVIDE CURRENT SENSOR ON ELECTRICAL FEED TO EACH UVC EMITTER. WHEN A UV LIGHT HAS FAILED, THE REDUCED CURRENT SHALL ANNUNCIATE AN ALARM.
UVC EMITTERS WILL RUN CONTINUOUSLY. THE AHU ACCESS DOORS ARE FURNISHED WITH A MICROSWITCH THAT WILL CUT POWER TO THE UVC EMITTERS WHEN OPENED. VERIFY INTERLOCK WIRING PROVIDED BY AHU MANUFACTURER BEFORE ENERGIZING THE EMITTERS.

FILTER STATUS

DDC HARDWARE SHALL PROVIDE DIRTY FILTER ALARM AT THE WORKSTATION COMPUTER WHEN PRESSURE DROP EXCEEDS SCHEDULED FINAL STATIC PRESSURE.

SYSTEM MONITORING AND ALARMS

1. THE DDC SHALL MONITOR AND DISPLAY FOR AHU:
   - A. SUPPLY AIR FAN STATUS (ON/OFF' EACH).
   - B. INTERLOCKED/RELATED EXHAUST FAN STATUS (ON/OFF; EACH).
   - C. AHU SF ELECTRICAL CURRENT (FLA; EACH).
   - D. AHU SUPPLY AIR TEMPERATURE.
   - E. AHU RETURN AIR TEMPERATURE.
   - F. RA RELATIVE HUMIDITY.
   - G. COOLING COIL LEAVING AIR TEMPERATURE.
   - H. COOLING COIL VALVE COMMAND POSITION.
   - I. COOLING COIL VALVE FEEDBACK POSITION.
   - J. HEATING COIL LEAVING AIR TEMPERATURE.
   - K. HEATING COIL VALVE COMMAND POSITION.
   - L. HEATING COIL VALVE FEEDBACK POSITION.
   - M. OA DAMPER COMMAND POSITION.
   - N. OA DAMPER FEEDBACK POSITION.
   - O. RETURN AIR DAMPER COMMAND POSITION.
   - P. RETURN AIR DAMPER FEEDBACK POSITION.
   - Q. SUPPLY FAN AIRFLOW.
   - R. AIR TERMINAL UNIT SUMMARY AIRFLOW.
   - S. DIFFERENTIAL PRESSURE ACROSS FILTER SECTION.
   - T. FIRE ALARM COMMAND STATUS.
   - U. DATE AND TIME.
   - V. ANY PROCESS ALARMS.
   - W. H-O-A SWITCH POSITION (EA.)
2. DDC SHALL ALARM THE FOLLOWING FOR AHU:
   - A. SUPPLY AIR FAN FAILURE (EACH).
   - B. AHU SUPPLY AIR TEMPERATURE - HIGH TEMPERATURE.
   - C. RETURN AIR TEMPERATURE - HIGH TEMPERATURE.
   - D. RETURN AIR RELATIVE HUMIDITY - HIGH HUMIDITY.
   - E. LOW AIR TEMPERATURE
   - F. HIGH STATIC PRESSURE CUTOUT.
   - G. FREEZESTAT CUTOUT.
   - H. FILTER PRESSURE DROP (SOILED) AT FILTER SECTION.
   - I. FIRE ALARM SHUTDOWN.
   - J. H-O-A SWITCH - HAND POSITION
   - K. H-O-A SWITCH - OFF POSITION

TRENDS: PROVIDE TREND DATA IN GRAPHIC FORMAT IN FIVE (5) MINUTE INCREMENTS FOR CONTROL POINTS LISTED IN APP D OF UFC 3-410-01.

NOTE:
IF THIS DRAWING IS LESS THAN 34" X 22"
IT IS A REDUCED SIZE DRAWING

STM	DESCRIPTION	DATE	APPR
1	MOD P00005	05/2023	
2	MOD P00006 AND MOD P00007	10/2025	

NAVFAC

JOHN EDWARD BAB LICENSE No 68893 STATE OF FLORIDA PROFESSIONAL ENGINEER

SEAL

BAMFORTH ENGINEERS - CONTRACTORS

A/E INFO

APPROVED

FOR COMMANDER NAVFAC 11/21/2025

ACTIVITY: Approved by J. Scott Roberts, Asset Management Branch Head & Supervisory Facility Planner, PWD Beaufort, SC via email

SATISFACTORY TO DATE 12/15/2022

DES	MAB	DRW	MAB	CHK	JEB
PM/DM	KTB / RLH				
BRANCH MANAGER	ALG				
CHIEF ENG/ARCH	EJA				
FP ENGINEER	DSN				

NAVAL FACILITIES ENGINEERING SYSTEMS COMMAND
NORFOLK, VA

DEPARTMENT OF THE NAVY
NAVAL FACILITIES ENGINEERING SYSTEMS COMMAND – MID-ATLANTIC
DC CORE
MCAS BEAUFORT
BEAUFORT, SC

P-475 AIRCRAFT MAINTENANCE HANGAR - VOLUME 3 (OSF OPTION)

OSF - CONTROLS - VAV AHU - SINGLE SUPPLY FAN

SCALE: NOT TO SCALE
EPROJECT NO.: 1363603
CONSTR. CONTR. NO.
NAVFAC DRAWING NO. 12860220
SHEET 1019 OF 1412

OMI702

DRAWFORM REVISION: 25 AUGUST 2020

Autodesk Docs://20042 MFA1 502 F39 Maintenance Hangar/20042 F39 Maint Hangar_OSF Shop Annex_ME-v2024.rvt
11/5/2025 8:36:48 AM

FUNCTION	POINT NAME	DESCRIPTION	SETTING (WITH UNITS)	RANGE (WITH UNITS)	IO TYPE	HOA REQ'D
PROOFS & SAFETIES	SF-S-1	SUPPLY FAN STATUS	NA	ON/OFF	BI	NA
	SF-FAU-S-1	SUPPLY FAN FAULT STATUS	NA	ALM/NORMAL	<___>	NA
	RA-D-S	RETURN AIR DAMPER STATUS	NA	<0-100%>	AI	NA
	SYS-EMG-BUT-S	EMERGENCY HVAC SHUT DOWN STATUS	NA	ALM/NORMAL	BI	NA
	SF-FAP-S	SUPPLY FAN FIRE ALARM CONTROL MODULE STATUS	NA	ALM/NORMAL	BI	NA
	SA-SMK	SUPPLY AIR SMOKE	NA	ALM/NORMAL	BI	NA
	SA-P-HL	SUPPLY AIR PRESSURE HIGH LIMIT	<___ IWC>	ALM/NORMAL	BI	NA
	RA-P-LL	RETURN AIR PRESSURE LOW LIMIT	<___ IWC>	ALM/NORMAL	BI	NA
	RST-BUT	SYSTEM RESET BUTTON (FOR SAFETIES)	NA	NA	<NET-IN><[BI>	NA
SCHEDULING	SYS-OCC-SCHED	SYSTEM OCCUPANCY SCHEDULE	SEE OCCUPANCY SCHEDULE	NA	<NET-OUT>	NA
START/STOP	UNIT STATUS	UNIT STATUS (HTG AND/OR CLG REQUEST)	NA	<___>	NET-OUT	NA
	SYS-OCC-C	OCCUPANCY COMMAND	NA	OCCUPIED(1)/WUCD(2)/UNOCCUPIED(3)	<NET-IN>	NA
	SYS-OCC	SYSTEM OCCUPANCY (ACTUAL)	NA	OCCUPIED(1)/WUCD(2)/UNOCCUPIED(3)	<~><NET-OUT>	NA
	SF-SS-1	SUPPLY FAN START/STOP	NA	ON/OFF	BO	Y
	ZONE-T-##	ZONE TEMPERATURE (ACTUAL FOR EACH ASSOCIATED VAV/CAV)	< ____ DEG. F.>	<___>	<NET-IN>	NA
	ZONE-T-UNOCC-LL-##	ZONE TEMPERATUE UNOCCUPIED LOW LIMIT (FOR EACH ASSOCIATED VAV/CAV)	SEE VAV/CAV THERMOSTAT SCHEDULE DRAWING	<___>	<NET-IN>	NA
	ZONE-T-UNOCC-HL-##	ZONE TEMPERATUE UNOCCUPIED HIGH LIMIT (FOR EACH ASSOCIATED VAV/CAV)	SEE VAV/CAV THERMOSTAT SCHEDULE DRAWING	<___>	<NET-IN>	NA
H-O-A SWITCHES	SF-VFD-S-1	SUPPLY FAN VFD STATUS	NA	ON/OFF	BI	[~]
SUPPLY FAN CAPACITY CONTROL	SF-C-1	SUPPLY FAN COMMAND	NA	0-100%	AO	[~]
	SA-P	SUPPLY AIR PRESSURE	NA	<___>	AI, NET-OUT	NA
	SA-P-RST	SUPPLY AIR PRESSURE RESET	<___>	<___>	<___>	NA
	ZONE-P-RQST-##	ZONE PRESSURE REQUEST	<___>	<___>	<___>	NA
	SA-P-SP	SUPPLY AIR PRESSURE SETPOINT	<___>	NA	NA	NA
	SUPPLY FAN CONTROL LOOP CONFIGURATION SETTINGS	PROPORTIONAL CONSTANT	NA	NA	NA	NA
		INTEGRAL CONSTANT	NA	NA	NA	NA
		BIAS	NA	NA	NA	NA
		MAXIMUM OUTPUT	NA	NA	NA	NA
		MINIMUM OUTPUT	NA	NA	NA	NA
		<____>	NA	NA	NA	NA

FUNCTION	POINT NAME	DESCRIPTION	SETTING (WITH UNITS)	RANGE (WITH UNITS)	IO TYPE	HOA REQ'D
RETURN AIR CONTROL	SA-F	SUPPLY AIR FLOW (SUM SF AIRFLOWS)	NA	[0 - ___ CFM]	<___>	NA
	F-DIFF-SP-OCC	FLOW DIFFERENCE SETPOINT (OCCUPIED MODE)	<___ CFM>	NA	NA	NA
	F-DIFF-SP-UNOCC	FLOW DIFFERENCE SETPOINT (UNOCCUPIED AND WARM-UP/COOL-DOWN MODES)	RETURN AIR FLOW EQUALS SUPPLY AIR FLOW	NA	NA	NA
	RA-D-S	RETURN AIR DAMPER POSITION	<__>	<0-100% OPEN>	AI	NA
	RA-D-C	RETURN AIR DAMPER COMMAND	<__>	0-100%	AO	NA
OUTSIDE AIR	OA-F	OUTSIDE AIR FLOW	<___CFM>	<__>	<NET-IN>	NA
	OA-D-S	OUTSIDE AIR DAMPER POSITION	<__>	<0-100% OPEN>	<NET-IN>	NA
	OA-D-ENA	OUTSIDE AIR DAMPER ENABLE	<__>	<__>	<NET-OUT>	NA
SUPPLY AIR TEMPERATURE	SA-T	SUPPLY AIR TEMPERATURE	NA	<___>	AI	NA
	CLG-V-C	COOLING VALVE COMMAND	<___>	<0-100% OPEN>	AO	[~]
	CLG-V-S	COOLING VALVE POSITION	PRECENT OPEN	<0-100% OPEN>	AI	NA
	HTG-V-C	PREHEAT COIL VALVE COMMAND	<___>	<0-100% OPEN>	AO	[~]
	HTG-V-S	PREHEAT COIL VALVE POSITION	PRECENT OPEN	<0-100% OPEN>	AI	NA
	SA-T-SP	SUPPLY AIR TEMPERATURE SETPOINT	<___>	<___>	AO	NA
	CLG-COIL-T	COOLING COIL LEAVING AIR TEMPERATURE	NA	<___>	AI	NA
	HTG-COIL-T-#	PRE-HEAT COIL ENTERING AIR TEMPERATURE	<___>	<___>	AI	NA
	HTG-COIL-T-#	PRE-HEAT COIL LEAVING AIR TEMPERATURE	<___>	<___>	AI	NA
	HTG-COIL-T-SP-#	PRE-HEAT COIL LEAVING AIR TEMPERATURE SETPOINT	<___>	<___>	AO	NA
	SA-T-MIN	SUPPLY AIR TEMPERATURE MINIMUM	55 DEG F	NA	<___>	NA
	SA-T-MAX	SUPPLY AIR TEMPERATURE MAXIMUM	65 DEG F	NA	<___>	NA
	SA-T-WARMUP	SUPPLY AIR TEMPERATURE WARM-UP MODE	65 DEG F	NA	<___>	NA
	SA-T-COOLDOWN	SUPPLY AIR TEMPERATURE COOLING MODE	55 DEG F	NA	<___>	NA
	SA-T-RST	SUPPLY AIR TEMPERATURE RESET	55-65 DEG F	NA	<___>	NA
	ZONE-CLG-RQST-##	ZONE COOLING REQUEST	<___>	NA	<___>	NA
	COOLING VALVE CONTROL LOOP CONFIGURATION SETTINGS	<THROTTLING RANGE><PROPORTIONAL GAIN>	<___>	NA	NA	NA
		INTEGRAL CONSTANT	<___>	NA	NA	NA
		BIAS	<___>	NA	NA	NA
		MAXIMUM OUTPUT	<___>	NA	NA	NA
		MINIMUM OUTPUT	<___>	NA	NA	NA
		<____>	<___>	NA	NA	NA
OTHER POINTS	RA-T	RETURN AIR TEMPERATURE	NA	<___>	AI	NA
	UVC-CSR	UVC CURRENT SENSING	NA	<___>	AI	NA
	PRE-FILT-P	PRE AIR FILTER PRESSURE	NA	<___>	AI	NA
	INT-FILT-P	INTERMEDIATE AIR FILTER PRESSURE	NA	<___>	AI	NA

NOTES:

1. POINTS INDICATED ARE AN ABBREVIATED LIST AND PROVIDED FOR REFERENCE ONLY. REFER TO EDITED POINTS SCHEDULE EXCEL FILE AS REQUIRED BY UFC 3-410-02

NOTE:
IF THIS DRAWING IS LESS THAN 34" X 22"
IT IS A REDUCED SIZE DRAWING

STM	DESCRIPTION	DATE	APPR
1	MOD P00005	05/2023	
2	MOD P00006 AND MOD P00007	10/2025	

NAVFAC

JOHN EDWARD BAILEY LICENSE No 66893 STATE OF FLORIDA PROFESSIONAL ENGINEER

BAMFORTH ENGINEERS & CONTRACTORS

AE INFO

APPROVED
FOR COMMANDER NAVFAC 11/21/2022
ACTIVITY Approved by J. Scott Roberts, Asset Management Branch Head & Supervisory Facility Planner, PWD Beaufort, SC via email.

SATISFACTORY TO DATE	12/15/2022
DES MAB / DRW MAB / CHK JEB	
PMDM	KTB / RLH
BRANCH MANAGER	ALG
CHIEF ENG/ARCH	EJA
FP ENGINEER	DSN

DEPARTMENT OF THE NAVY
NAVAL FACILITIES ENGINEERING SYSTEMS COMMAND ~ MID-ATLANTIC
DC-CORE NORFOLK, VA

MCAS BEAUFORT
BEAUFORT, SC

P-475 AIRCRAFT MAINTENANCE HANGAR - VOLUME 3 (OSF OPTION)

OSF - POINTS SCHEDULE - VAV AHU - SINGLE SUPPLY FAN

SCALE:
EPROJECT NO.: 1363603
CONSTR. CONTR. NO.
NAVFAC DRAWING NO. 12860221
SHEET 1020 OF 1412

OMI703

DRAWFORM REVISION: 25 AUGUST 2020

Autodesk Docs://20042 UMFAT 503 F35 Maintenance Hangar/20042 F35 Maint Hangar - OSF Shop Annex_MEP_v2024.rvt
11/5/2025 8:36:48 AM

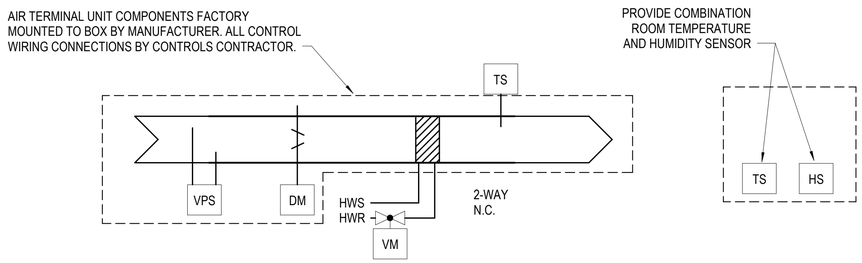

A1 SCHEMATIC CONTROL DIAGRAMS - TYPICAL VAV TERMINAL UNIT

NOT TO SCALE

VARIABLE AIR VOLUME (VAV) TERMINAL UNIT (ATU) WITH HOT WATER REHEAT SEQUENCE OF OPERATION

OCCUPANCY MODES

OCCUPIED: THE VAV ATU HARDWARE SHALL BE IN THE OCCUPIED MODE WHEN THE LOCAL SPACE OCCUPANCY INPUT(S) INDICATE THAT THE SPACE IS OCCUPIED OR WHEN THE INPUT FROM THE SYSTEM SCHEDULER IS OCCUPIED.

OCCUPANCY OVERRIDE: MOMENTARY OVERRIDE SWITCH INTEGRAL TO THE ZONE TEMPERATURE SENSOR. SIGNAL DDC THAT THE ZONE IS OCCUPIED AND TO OVERRIDE THE SCHEDULED MODE. OVERRIDE TIME DURATION 2 HOURS (ADJUSTABLE).

OCCUPIED INPUTS FROM 2 DIFFERENT SPACES ARE REQUIRED TO HELP AVOID NEEDLESS TURNING ON OF THE SYSTEM (DUE TO CLEANING STAFF OR SECURITY STAFF PASSING THROUGH AFTER HOURS).

UNOCCUPIED: THE VAV ATU HARDWARE MUST BE IN THE UNOCCUPIED MODE WHEN THE LOCAL SPACE OCCUPANCY INPUT(S) INDICATE THAT THE SPACE IS UNOCCUPIED AND THE INPUT FROM THE SYSTEM SCHEDULER IS UNOCCUPIED. IN THE UNOCCUPIED MODE THE VAV ATU DAMPER SHALL BE AT ITS MINIMUM POSITION.

ZONE TEMPERATURE CONTROL – WITH REHEAT

IN THE OCCUPIED MODE THE ZONE TEMPERATURE SETPOINT SHALL BE AT THE CONFIGURED SETPOINT OR AT THE OCCUPANT-ADJUSTABLE SETPOINT VIA WALL-MOUNTED THERMOSTAT AS INDICATED.
IN THE UNOCCUPIED MODE THE ZONE TEMPERATURE SETPOINT SHALL BE AT THE CONFIGURED SETPOINT AS INDICATED.

THE DDC SHALL MODULATE THE VAV ATU DAMPER TO MAINTAIN SUPPLY AIR FLOW AT SETPOINT AS MEASURED BY A MULTI-POINT FLOW SENSING ELEMENT AT THE INLET TO THE VAV ATU. UPON A RISE IN ZONE TEMPERATURE ABOVE ZONE COOLING TEMPERATURE SETPOINT, THE AIRFLOW SETPOINT SHALL BE ADJUSTED BETWEEN MINIMUM AND MAXIMUM FLOW BASED ON THE DIFFERENCE BETWEEN ZONE TEMPERATURE AND ZONE COOLING TEMPERATURE SETPOINT AS INDICATED. UPON A FALL IN ZONE TEMPERATURE BELOW ZONE COOLING TEMPERATURE SETPOINT, THE AIRFLOW SHALL BE MAINTAINED AT A FIXED AIRFLOW SETPOINT.

UPON A FALL IN ZONE TEMPERATURE BELOW ZONE HEATING TEMPERATURE SETPOINT, THE AIRFLOW SHALL BE MAINTAINED AT A FIXED AIRFLOW SETPOINT AND THE HEATING VALVE SHALL MODULATE TOWARDS OPEN IN SEQUENCE.

LIMIT DISCHARGE AIR TEMPERATURE TO A MAXIMUM OF 20 DEGREE F ABOVE THE ZONE HEATING TEMPERATURE SETPOINT.

PRESSURE REQUEST: GENERATE A PRESSURE REQUEST WHEN ANY VAV AIR TERMINAL UNIT DAMPER SERVED BY THE SYSTEM IS GREATER THAN 99% (ADJUSTABLE) OPEN.

PROVIDE SOFTWARE THAT COUNTS THE NUMBER OF PRESSURE REQUESTS PER OCCUPIED MODE. THIS WILL ALLOW THE OPERATOR TO EASILY DETERMINE WHICH VAV AIR TERMINAL UNITS ARE DRIVING THE RESET. THE DDC SHALL INDICATE VAV #S GENERATING PRESSURE REQUEST ON THE AHU GRAPHIC SCREEN.

COOLING REQUEST: GENERATE A COOLING REQUEST AS FOLLOWS: GENERATE A COOLING REQUEST WHEN THE COOLING LOOP OUTPUT SIGNAL AT ANY ZONE IS 95% (ADJUSTABLE) OR ABOVE. IN ADDITION, GENERATE A COOLING REQUEST WHEN THE RELATIVE HUMIDITY AT ANY ZONE IS 55% (ADJUSTABLE) OR ABOVE.

PROVIDE SOFTWARE THAT COUNTS THE NUMBER OF COOLING REQUESTS PER OCCUPIED MODE. THIS WILL ALLOW THE OPERATOR TO EASILY DETERMINE WHICH VAV AIR TERMINAL UNITS ARE DRIVING THE RESET. THE DDC SHALL INDICATE VAV #S GENERATING COOLING REQUESTS ON THE AHU GRAPHIC SCREEN.

ALARMS

IF THE SPACE TEMPERATURE IS 5 DEGREES F (ADJUSTABLE) IN VARIANCE WITH THE OPERATING PARAMETERS FOR 10 MINUTES (ADJUSTABLE), AN ALARM SHALL BE SENT TO THE DDC.

IF THE ATU DISCHARGE AIR TEMPERATURE IS 20 DEGREES F (ADJUSTABLE) ABOVE THE ZONE SETPOINT TEMPERATURE FOR 15 MINUTES (ADJUSTABLE), AN ALARM SHALL BE SENT TO THE DDC.

IF THE ATU DISCHARGE AIR TEMPERATURE IS 5 DEGREES F (ADJUSTABLE) BELOW THE ZONE DISCHARGE SETPOINT TEMPERATURE FOR 15 MINUTES (ADJUSTABLE), AN ALARM SHALL BE SENT TO THE DDC.

TRENDS: PROVIDE TREND DATA IN GRAPHIC FORMAT IN FIVE (5) MINUTE INCREMENTS FOR ALL CONTROL POINTS.

FUNCTION	POINT NAME	DESCRIPTION	SETTING (WITH UNITS)	RANGE (WITH UNITS)	IO TYPE	HOA REQ'D
SCHEDULING	SYS-OCC-SCHED	SYSTEM OCCUPANCY SCHEDULE	SEE OCCUPANCY SCHEDULE FOR ASSOCIATED SYSTEM	NA	<NET-OUT>	NA
OCCUPANY MODES	SYS-OCC-C	OCCUPANCY COMMAND	NA	OCCUPIED/OCCUPANCY OVERRIDE/UNOCCUPIED	<BI><NET-OUT>	NA
	SYS-OCC	SYSTEM OCCUPANCY (ACTUAL)	NA	OCCUPIED/OCCUPANCY OVERRIDE/UNOCCUPIED	<~><NET-OUT>	NA
	ZONE-T-UNOCC-LL	ZONE TEMPERATUE UNOCCUPIED LOW LIMIT	SEE VAV/CAV THERMOSTAT SCHEDULE DRAWING	<___>	<NET-OUT>	NA
	ZONE-T-UNOCC-HL	ZONE TEMPERATUE UNOCCUPIED HIGH LIMIT	SEE VAV/CAV THERMOSTAT SCHEDULE DRAWING	<___>	<NET-OUT>	NA
VAV ATU CONTROL	ZONE-T-SP	ZONE TEMPERATURE SETPOINT	<___>	<___>	AO	NA
	ZONE-T	ZONE TEMPERATURE (ACTUAL)	< DEG. F.>	<___>	<AI><NET-OUT>	NA
	ZONE-CLG-RQST	ZONE COOLING REQUEST	NA	NA	<NET-OUT>	NA
	ZONE-P-RQST	ZONE PRESSURE REQUEST	NA	<___>	<NET-OUT>	NA
	ZONE-RH	ZONE RELATIVE HUMIDITY (ACTUAL)	NA	<___>	AI	NA
	ATU-F	AIR TERMINAL UNIT FLOW (ACTUAL)	NA	<___>	AI	NA
	ATU-F-MIN-SP	AIR TERMINAL UNIT FLOW MINIMUM SETPOINT	<___>	<___>	AO	NA
	ATU-F-MAX-SP	AIR TERMINAL UNIT FLOW MAXIMUM SETPOINT	<___>	<___>	AO	NA
	ATU-P	AIR TERMINAL UNIT INLET VELOCITY PRESSURE (ACTUAL)	NA	<___>	AI	NA
	ATU-SA-T	AIR TERMINAL UNIT SUPPLY AIR TEMPERATURE (ACTUAL)	NA	<___>	AI	NA
	ATU-D-C	AIR TERMINAL UNIT DAMPER COMMAND	<___>	<___>	AI	NA
	ATU-D-S	AIR TERMINAL UNIT DAMPER POSITION (ACTUAL)	NA	<___>	AO	NA
	ATU-HTG-V-C	AIR TERMINAL UNIT HOT WATER VALVE COMMAND	<___>	<___>	AI	NA
	ATU-HTG-V-S	AIR TERMINAL UNIT HOT WATER VALVE POSITION (ACTUAL)	NA	<___>	AO	NA

NOTES:
1. POINTS INDICATED ARE AN ABBREVIATED LIST AND PROVIDED FOR REFERENCE ONLY. REFER TO EDITED POINTS SCHEDULE EXCEL FILE AS REQUIRED BY UFC 3-410-02

NOTE:
IF THIS DRAWING IS LESS THAN 34" X 22"
IT IS A REDUCED SIZE DRAWING

STM	DESCRIPTION	DATE	APPR
1	MOD P00005	05/2023	
2	MOD P00006 AND MOD P00007	10/2025	

NAVFAC

JOHN EDWARD BALL LICENSE No 66893 STATE OF FLORIDA PROFESSIONAL ENGINEER

SEAL

BAMFORTH ENGINEERS & CONTRACTORS

A/E INFO

APPROVED

FOR COMMANDER NAVFAC

ACTIVITY
Approved by J. Scott Roberts, Asset Management Branch Head & Supervisory Facility Planner, PWD Beaufort, SC via email.

SATISFACTORY TO DATE 12/15/2022

DES MAB | DRW MAB | CHK JEB

PMDM KTB / RLH

BRANCH MANAGER ALG

CHIEF ENG/ARCH EJA

FP ENGINEER DSN

DEPARTMENT OF THE NAVY
NAVAL FACILITIES ENGINEERING SYSTEMS COMMAND ~ MID-ATLANTIC
NORFOLK, VA

DC CORE:
MCAS BEAUFORT

BEAUFORT, SC

P-475 AIRCRAFT MAINTENANCE HANGAR - VOLUME 3 (OSF OPTION)

OSF - CONTROLS - VARIABLE VOLUME AIR TERMINAL UNIT

SCALE: NOT TO SCALE

EPROJECT NO.: 1363603

CONSTR. CONTR. NO.

NAVFAC DRAWING NO.
12860222

SHEET 1021 OF 1412

OMI704

DRAWFORM REVISION: 25 AUGUST 2020

Autodesk Docs://20042 MFA1 302 FS Maintenance Hangar/20042 F35 Maint Hangar_OSF Shop Annex_MIL-02024.rvt
11/5/2025 8:36 AM

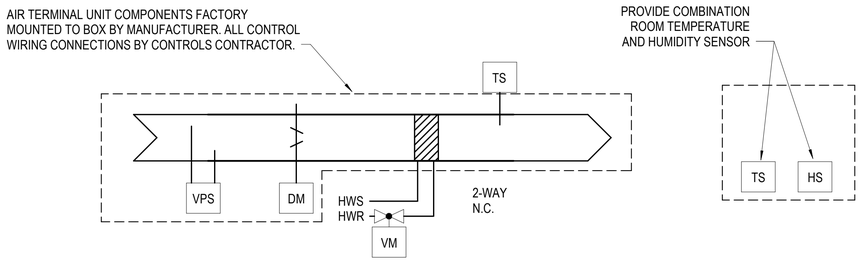

A1 SCHEMATIC CONTROL DIAGRAMS - TYPICAL CAV TERMINAL UNIT

NOT TO SCALE

CONSTANT AIR VOLUME (CAV) TERMINAL UNIT (ATU) SEQUENCE OF OPERATION

OCCUPANCY MODES

OCCUPIED: THE CAV ATU HARDWARE SHALL BE IN THE OCCUPIED MODE WHEN THE LOCAL SPACE OCCUPANCY INPUT(S) INDICATE THAT THE SPACE IS OCCUPIED OR WHEN THE INPUT FROM THE SYSTEM SCHEDULER IS OCCUPIED.

OCCUPANCY OVERRIDE: MOMENTARY OVERRIDE SWITCH INTEGRAL TO THE ZONE TEMPERATURE SENSOR. SIGNAL DDC THAT THE ZONE IS OCCUPIED AND TO OVERRIDE THE SCHEDULED MODE. OVERRIDE TIME DURATION 2 HOURS (ADJUSTABLE).

OCCUPIED INPUTS FROM 2 DIFFERENT SPACES ARE REQUIRED TO HELP AVOID NEEDLESS TURNING ON OF THE SYSTEM (DUE TO CLEANING STAFF OR SECURITY STAFF PASSING THROUGH AFTER HOURS.

UNOCCUPIED: THE CAV ATU HARDWARE MUST BE IN THE UNOCCUPIED MODE WHEN THE LOCAL SPACE OCCUPANCY INPUT(S) INDICATE THAT THE SPACE IS UNOCCUPIED AND THE INPUT FROM THE SYSTEM SCHEDULER IS UNOCCUPIED. IN THE UNOCCUPIED MODE THE CAV ATU DAMPER SHALL BE AT ITS FULL OPEN POSITION.

ZONE TEMPERATURE CONTROL – WITH REHEAT

IN THE OCCUPIED MODE THE ZONE TEMPERATURE SETPOINT SHALL BE AT THE CONFIGURED SETPOINT OR AT THE OCCUPANT-ADJUSTABLE SETPOINT VIA WALL-MOUNTED THERMOSTAT AS INDICATED.

IN THE UNOCCUPIED MODE THE ZONE TEMPERATURE SETPOINT SHALL BE AT THE CONFIGURED SETPOINT AS INDICATED.

THE DDC SHALL MODULATE THE CAV ATU DAMPER TO MAINTAIN SUPPLY AIR FLOW AT SETPOINT AS MEASURED BY A MULTI-POINT FLOW SENSING ELEMENT AT THE INLET TO THE CAV ATU. UPON A FALL IN ZONE TEMPERATURE BELOW ZONE HEATING TEMPERATURE SETPOINT, THE HEATING VALVE SHALL MODULATE TOWARDS OPEN.

COOLING REQUEST: GENERATE A COOLING REQUEST AS FOLLOWS: GENERATE A COOLING REQUEST WHEN THE HEATING VALVE IS MODULATED TOWARDS CLOSED AND THE SPACE TEMPERATURE RISES ABOUT SETPOINT. IN ADDITION, GENERATE A COOLING REQUEST WHEN THE RELATIVE HUMIDITY AT ANY ZONE IS 55% (ADJUSTABLE) OR ABOVE.

PROVIDE SOFTWARE THAT COUNTS THE NUMBER OF COOLING REQUESTS PER OCCUPIED MODE. THIS WILL ALLOW THE OPERATOR TO EASILY DETERMINE WHICH CAV AIR TERMINAL UNITS ARE DRIVING THE RESET. THE DDC SHALL INDICATE CAV #S GENERATING COOLING REQUESTS ON THE AHU GRAPHIC SCREEN.

ALARMS

IF THE SPACE TEMPERATURE IS 5 DEGREES F (ADJUSTABLE) IN VARIANCE WITH THE ZONE TEMPERATURE SETPOINT FOR 10 MINUTES (ADJUSTABLE), AN ALARM SHALL BE SENT TO THE DDC.

IF THE ATU DISCHARGE AIR TEMPERATURE IS 20 DEGREES F (ADJUSTABLE) ABOVE THE ZONE SETPOINT TEMPERATURE FOR 15 MINUTES (ADJUSTABLE), AN ALARM SHALL BE SENT TO THE DDC.

IF THE ATU DISCHARGE AIR TEMPERATURE IS 5 DEGREES F (ADJUSTABLE) BELOW THE ZONE DISCHARGE SETPOINT TEMPERATURE FOR 15 MINUTES (ADJUSTABLE), AN ALARM SHALL BE SENT TO THE DDC.

FUNCTION	POINT NAME	DESCRIPTION	SETTING (WITH UNITS)	RANGE (WITH UNITS)	IO TYPE	HOA REQ'D
SCHEDULING	SYS-OCC-SCHED	SYSTEM OCCUPANCY SCHEDULE	SEE OCCUPANCY SCHEDULE DRAWING	NA	<NET-OUT>	NA
	SYS-OCC-C	OCCUPANCY COMMAND	NA	OCCUPIED/OCCUPANCY OVERRIDE/UNOCCUPIED	<BI><NET-OUT>	NA
	SYS-OCC	SYSTEM OCCUPANCY (ACTUAL)	NA	OCCUPIED/OCCUPANCY OVERRIDE/UNOCCUPIED	<~><NET-OUT>	NA
	ZONE-T-UNOCC-LL	ZONE TEMPERATUE UNOCCUPIED LOW LIMIT	SEE VAV/CAV THERMOSTAT SCHEDULE DRAWING	<___>	<NET-OUT>	NA
	ZONE-T-UNOCC-HL	ZONE TEMPERATUE UNOCCUPIED HIGH LIMIT	SEE VAV/CAV THERMOSTAT SCHEDULE DRAWING	<___>	<NET-OUT>	NA
CAV ATU CONTROL	ZONE-T-SP	ZONE TEMPERATURE SETPOINT	<___>	<___>	AO	NA
	ZONE-T	ZONE TEMPERATURE (ACTUAL)	< ____ DEG. F.>	<___>	<AI><NET-OUT>	NA
	ZONE-CLG-RQST	ZONE COOLING REQUEST	<___>	NA	<NET-OUT>	NA
	ZONE-RH	ZONE RELATIVE HUMIDITY (ACTUAL)	NA	<___>	AI	NA
	ATU-F	AIR TERMINAL UNIT FLOW (ACTUAL)	NA	<___>	AI	NA
	ATU-F-SP	AIR TERMINAL UNIT FLOW SETPOINT	<___>	<___>	AO	NA
	ATU-P	AIR TERMINAL UNIT INLET VELOCITY PRESSURE (ACTUAL)	NA	<___>	AI	NA
	ATU-SA-T	AIR TERMINAL UNIT SUPPLY AIR TEMPERATURE (ACTUAL)	NA	<___>	AI	NA
	ATU-D-C	AIR TERMINAL UNIT DAMPER COMMAND	<___>	<___>	AI	NA
	ATU-D-S	AIR TERMINAL UNIT DAMPER POSITION (ACTUAL)	NA	<___>	AO	NA
	ATU-HTG-V-C	AIR TERMINAL UNIT HOT WATER VALVE COMMAND	<___>	<___>	AI	NA
	ATU-HTG-V-S	AIR TERMINAL UNIT HOT WATER VALVE POSITION (ACTUAL)	NA	<___>	AO	NA

NOTES:

1. POINTS INDICATED ARE AN ABBREVIATED LIST AND PROVIDED FOR REFERENCE ONLY. REFER TO EDITED POINTS SCHEDULE EXCEL FILE AS REQUIRED BY UFC 3-410-02

SPACE SENSOR SCHEDULE - AHU-1.2

SYSTEM SERVICE (AHU)	AIR TERMINAL UNIT IDENTIFIER	SPACES SERVED (ROOM #)	SENSOR LOCATION (ROOM #)	SUMMER ZONE TEMPERATURE (DEGREE F)	WINTER ZONE TEMPERATURE (DEGREE F)	ZONE TEMPERATURE SETPOINT ADJUSTMENT	TEMPERATURE SENSOR	RELATIVE HUMIDITY SENSOR	UNOCCUPIED OVERRIDE PUSHBUTTON
AHU-1.2	1.2.1	O102	O102	78	68	P	X	X	X
AHU-1.2	1.2.2	O102	O102	78	68	P	X	X	X
AHU-1.2	1.2.3	O107	O107	78	68	P	X	X	X
AHU-1.2	1.2.4	O101,O103,O105,O106,O108	O101	78	68	-	X	X	X

SCHEDULE NOTES:

1. ZONE TEMPERATURE INDICATED IN THE OCCUPIED MODE
2. UNOCCUPIED HEATING TEMPERATURE SETBACK 10 DEGREE F BELOW OCCUPIED HEATING TEMPERATURE. UNOCCUPIED COOLING TEMPERATURE SETBACK 5 DEGREE F ABOVE OCCUPIED COOLING TEMPERATURE.
3. UNOCCUPIED RELATIVE HUMIDITY SETBACK, ABOVE 60 PERCENT.
4. WHERE "P" IS INDICATED IN THE ZONE TEMPERATURE SETPOINT ADJUSTMENT COLUMN, PROVIDE ADJUSTABLE (TO USER) THERMOSTAT WITHIN THE ROOM WITH +/- 3 DEGREE F RANGE.
5. SPACES WITH NON-ADJUSTABLE SETPOINTS, POINTS SCHEDULE SETPOINT MUST BE CAPABLE OF BEING OVERRIDDEN FROM THE M&C SOFTWARE

NOTE:
IF THIS DRAWING IS LESS THAN 34" X 22"
IT IS A REDUCED SIZE DRAWING

SYM	DESCRIPTION	DATE	APPR
1	MOD P00005	05/2023	
2	MOD P00006 AND MOD P00007	10/2025	

NAVFAC

JOHN EDWARD BALL LICENSE No 68893 STATE OF FLORIDA PROFESSIONAL ENGINEER

SEAL

BAMFORTH ENGINEERS & CONTRACTORS

AE INFO

APPROVED

FOR COMMANDER NAVFAC

ACTIVITY
Approved by J. Scott Roberts,
Asset Management Branch Head &
Supervisory Facility Planner, PWD
Beaufort, SC via email.

SATISFACTORY TO DATE 12/15/2022

DES MAB	DRW MAB	CHK JEB	
PM/DM	KTB / RLH		
BRANCH MANAGER	ALG		
CHIEF ENG/ARCH	EJA		
FP ENGINEER	DSN		

DEPARTMENT OF THE NAVY
NAVAL FACILITIES ENGINEERING SYSTEMS COMMAND
DC CORE
MCAS BEAUFORT

NAVAL FACILITIES ENGINEERING SYSTEMS COMMAND – MID-ATLANTIC
NORFOLK, VA

BEAUFORT, SC

P-475 AIRCRAFT MAINTENANCE HANGAR - VOLUME 3 (OSF OPTION)

OSF - CONTROLS - CONSTANT VOLUME AIR TERMINAL UNIT

SCALE: NOT TO SCALE

ERPROJECT NO.: 1363603

CONSTR. CONTR. NO.

NAVFAC DRAWING NO.
12860223

SHEET 1022 OF 1412

OMI705

DRAWFORM REVISION: 25 AUGUST 2020

Autodesk Docs://20042 VMFA1 507 F35 Maintenance Hangar/20042 F35 Maintenance Hangar - OSF Shop Annex_MEL-V2024.rvt
11/5/2025 8:36:48 AM

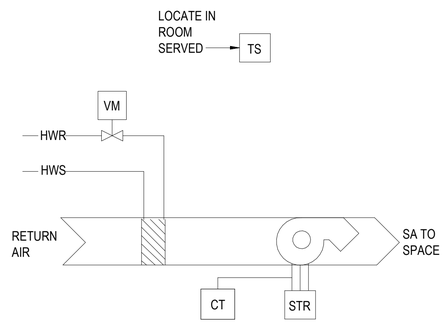

A1 SCHEMATIC CONTROL DIAGRAM - UNIT HEATER

NOT TO SCALE

UNIT HEATER SEQUENCE OF OPERATION

ZONE TEMPERATURE CONTROL

THE DDC HARDWARE SHALL MODULATE THE HEATING COIL CONTROL VALVE AND CYCLE FAN ON TO MAINTAIN SPACE TEMPERATURE AT THE CONFIGURED SETPOINT, AS SHOWN. UPON A RISE IN ZONE TEMPERATURE ABOVE ZONE TEMPERATURE SETPOINT, THE DDC HARDWARE SHALL STOP THE FAN AND CLOSE THE HEATING COIL CONTROL VALVE.

SAFETIES

THE UNIT SHALL RUN SUBJECT TO THE UNIT MANUFACTURER'S SAFETIES.

ALARMS

IF THE ZONE TEMPERATURE IS 5 DEGREES F (ADJUSTABLE) BELOW THE ZONE TEMPERATURE SETPOINT FOR 10 MINUTES (ADJUSTABLE), AN ALARM SHALL BE SENT TO THE DDC.

IF THE FAN COMMAND AND THE FAN STATUS DO NOT MATCH, AS DETEMRINED BY THE FAN CURRENT SENSING RELAY, AN ALARM SHALL BE SENT TO THE DDC.

FUNCTION	POINT NAME	DESCRIPTION	SETTING (WITH UNITS)	RANGE (WITH UNITS)	IO TYPE	HOA REQ'D
UNIT HEATER	ZONE-T-SP	ZONE TEMPERATURE SETPOINT	55 DEG F	<___>	NA	NA
	ZONE-T	ZONE TEMPERATURE (ACTUAL)	<_____DEG. F.>	<___>	AI	NA
	UH-SS	UNIT HEATER FAN START/STOP	<___>	<___>	BO	NA
	HW-V-C	HOT WATER VALVE COMMAND	<___>	<___>	AO	NA
	HW-V-S	HOT WATER VALVE POSITION (ACTUAL)	NA	<___>	<___>	NA

NOTES:

1. POINTS INDICATED ARE AN ABBREVIATED LIST AND PROVIDED FOR REFERENCE ONLY. REFER TO EDITED POINTS SCHEDULE EXCEL FILE AS REQUIRED BY UFC 3-410-02

NOTE:
IF THIS DRAWING IS LESS THAN 34" X 22"
IT IS A REDUCED SIZE DRAWING

STM	DESCRIPTION	DATE	APPR
1	MOD P00005	05/2023	
2	MOD P00006 AND MOD P00007	10/2025	

NAVFAC

JOHN EDWARD BAMFORTH LICENSE No 68893 STATE OF FLORIDA PROFESSIONAL ENGINEER

SEAL

BAMFORTH ENGINEERS • CONTRACTORS

A/E INFO

APPROVED

FOR COMMANDER NAVFAC

ACTIVITY
Approved by J. Scott Roberts,
Asset Management Branch Head &
Supervisory Facility Planner, PWD
Beaufort, SC via email.

SATISFACTORY TO DATE 12/15/2022

DES MAB | DRW MAB | CHK JEB

PMDM KTB / RLH

BRANCH MANAGER ALG

CHIEF ENG/ARCH EJA

FP ENGINEER DSN

DEPARTMENT OF THE NAVY
NAVAL FACILITIES ENGINEERING SYSTEMS COMMAND
DC CORE:
MCAS BEAUFORT

NAVAL FACILITIES ENGINEERING SYSTEMS COMMAND ~ MID-ATLANTIC
NORFOLK, VA

BEAUFORT, SC

P-475 AIRCRAFT MAINTENANCE HANGAR - VOLUME 3 (OSF OPTION)

OSF - CONTROLS - UNIT HEATER

SCALE: NOT TO SCALE

EPROJECT NO.: 1363603

CONSTR. CONTR. NO.

NAVFAC DRAWING NO.
12860224

SHEET 1023 OF 1412

OMI706

DRAWFORM REVISION: 25 AUGUST 2020

Autodesk Docs://20242 MFA1 302 FB Maintenance Hangar/20242 F35 Maint Hangar_OSF Shop Annex_MEc-0224.rvt
11/5/2025 8:36 AM

DUCTLESS SPLIT SYSTEM SEQUENCE OF OPERATION

THE CONTROL SEQUENCES ARE BY THE EQUIPMENT MANUFACTURER. SETTINGS ARE THROUGH THE SPACE SENSOR.

SAFETIES

THE SYSTEM SHALL RUN SUBJECT TO THE UNIT MANUFACTURER'S SAFETIES.

SPACE TEMPERATURE CONTROL

OCCUPIED MODE 24 HOURS / DAY 7 DAYS A WEEK.

WHEN ENABLED THE SYSTEM HARDWARE SHALL MAINTAIN SPACE TEMPERATURE AT THE CONFIGURED SETPOINT.

ALARM

WHEN SPACE IS 5 DEGREES (ADJUSTABLE) ABOVE SETPOINT, AN ALARM SHALL BE SENT TO THE DDC.

DUCTLESS SPLIT SPACE SENSOR SCHEDULE

EQUIPMENT IDENTIFIER	SPACES SERVED (ROOM NAME #)	SENSOR LOCATION (ROOM NAME #)	SUMMER ZONE TEMPERATURE (DEGREE F)	WINTER ZONE TEMPERATURE (DEGREE F)
AC-1.5	O106 COMM	O106 COMM	78	68
AC-1.6	O108 ELEC	O108 ELEC	80	55

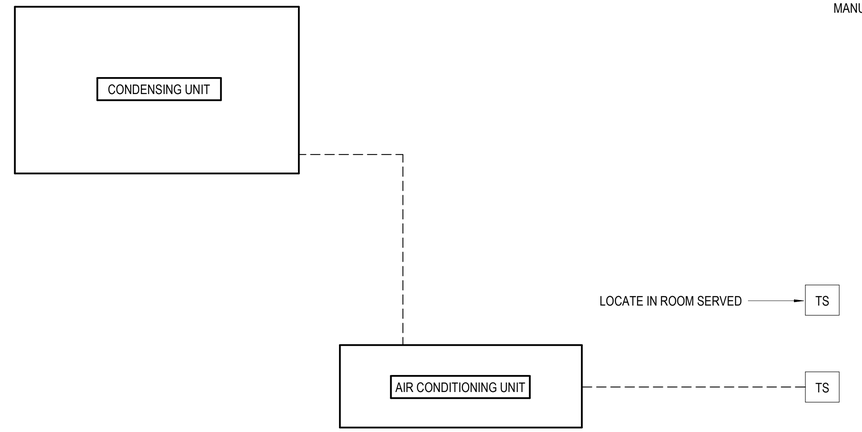

C3 DUCTLESS SPLIT SCHEMATIC
NOT TO SCALE

FUNCTION	POINT NAME	DESCRIPTION	SETTING (WITH UNITS)	RANGE (WITH UNITS)	IO TYPE	HOA REQ'D
DX SPLIT	ZONE-T	ZONE TEMPERATURE(ACTUA	<__>	<__>	AI	NA

NOTES:
1. POINTS INDICATED ARE AN ABBREVIATED LIST AND PROVIDED FOR REFERENCE ONLY. REFER TO EDITED POINTS SCHEDULE EXCEL FILE AS REQUIRED BY UFC 3-410-02

NOTES:

SHEET NOTES:

A. CONTROLS AND SPACE SENSORS BY DUCTLESS SPLIT MANUFACTURER.

NOTE:
IF THIS DRAWING IS LESS THAN 34" X 22"
IT IS A REDUCED SIZE DRAWING

SYM	DESCRIPTION	DATE	APPR
1	MOD P00005	05/2023	
2	MOD P00006 AND MOD P00007	10/2025	

NAVFAC

JOHN EDWARD BAILEY LICENSE No 68893 STATE OF FLORIDA PROFESSIONAL ENGINEER

SEAL

BAMFORTH ENGINEERS & CONTRACTORS

A/E INFO

APPROVED

FOR COMMANDER NAVFAC

ACTIVITY
Approved by J. Scott Roberts,
Asset Management Branch Head &
Supervisory Facility Planner, PWD
Beaufort, SC via email.

SATISFACTORY TO DATE 12/15/2022

DES VLM | DRW DYP | CHK JEB

PMDM KTB / RLH

BRANCH MANAGER ALG

CHIEF ENG/ARCH EJA

FP ENGINEER DSN

NAVAL FACILITIES ENGINEERING SYSTEMS COMMAND

DEPARTMENT OF THE NAVY
NAVAL FACILITIES ENGINEERING SYSTEMS COMMAND ~ MID-ATLANTIC
NORFOLK, VA

DC CODE
MCAS BEAUFORT
BEAUFORT, SC

P-475 AIRCRAFT MAINTENANCE HANGAR - VOLUME 3 (OSF OPTION)

HANGAR - CONTROL - DUCTLESS SPLIT SYSTEM

SCALE: NOT TO SCALE

EPROJECT NO.: 1363603

CONSTR. CONTR. NO.

NAVFAC DRAWING NO.
12860225

SHEET 1024 OF 1412

OMI707

DRAWFORM REVISION: 25 AUGUST 2020

Autodesk Docs://2042 LMFA T 502 F35 Maintenance Hangar/2042 F35 Maint Hangar_OSF Shop Annex_ME-02024.rvt
11/5/2025 8:36:49 AM

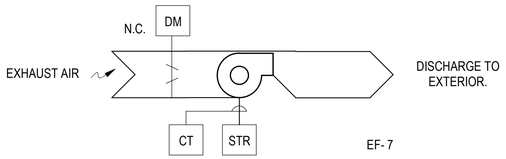

A1 SCHEMATIC CONTROL DIAGRAM - EF INTERLOCKED
NOT TO SCALE

EXHAUST FAN CONTROL

OCCUPIED MODE: THE EXHAUST AIR DAMPER SHALL BE COMANDED OPEN. WHEN THE EXHAUST AIR DAMPER IS PROVEN OPEN, THE EXHAUST FAN SHALL BE ENABLED AND COMMANDED TO RUN.

UNOCCUPIED MODE: THE EXHAUST FAN SHALL BE DISABLED UNLESS INDICATED TO OPERATE CONTINUOUSLY. WHEN THE EXHAUST FAN STATUS IS PROVEN OFF, THE EXHAUST AIR DAMPER SHALL BE COMMANDED CLOSE.

WARM UP/COOL DOWN: THE EXHAUST FAN SHALL BE DISABLED UNLESS INDICATED TO OPERATE CONTINUOUSLY

EXHAUST FAN H-O-A SWITCHES

HAND: WITH THE H-O-A SWITCH IN THE HAND POSITION, THE EXHAUST FAN SHALL START AND RUN CONTINUOUSLY, SUBJECT TO SAFETIES AND DAMPER PROOFS. FAN SHALL BE UNDER MANUAL OPERATOR CONTROL.

OFF: WITH THE H-O-A SWITCH IN THE OFF POSITION, THE EXHAUST FAN SHALL STOP.

AUTO: WITH THE H-O-A SWITCH IN THE AUTO POSITION, THE EXHAUST FAN SHALL START AND RUN SUBJECT TO THE SUPPLY FAN RUNNING AND SAFETIES AND DAMPER PROOFS. FAN SHALL BE UNDER CONTROL OF THE DDC HARDWARE.

EMERGENCY AIR DISTRIBUTION SHUTOFF

ENABLED FROM THE EMERGENCY AIR DISTRIBUTION SHUTOFF PANEL, REFERENCE SEQUENCE OF OPERATION.

PROOFS AND SAFETIES

THE EXHAUST FAN AND ALL DDC HARDWARE CONTROL LOOPS SHALL BE SUBJECT TO PROOFS AND SAFETIES. SAFETIES SHALL BE DIRECT-HARDWIRE INTERLOCKED TO THE MOTOR STARTER. DDC HARDWARE SHALL MONITOR ALL PROOFS AND SAFETIES AND FAILURE OF ANY PROOF OR ACTIVATION OF ANY SAFETY SHALL RESULT IN ALL CONTROL LOOPS BEING DISABLED AND THE EF FAN BEING COMMANDED OFF UNTIL RESET.

SYSTEM MONITORING AND ALARMS

IF ANY PIECE OF EQUIPMENT FAILS TO PROVE STATUS AFTER IT IS COMMANDED, WITH A 20 SECOND (ADJUSTABLE) TIME DELAY, AN ALARM SHALL BE SENT TO THE DDC. THIS INCLUDES FANS AND DAMPERS.

1. DDC SHALL MONITOR AND DISPLAY :
   - A. EXHAUST FAN STATUS (ON/OFF' EACH).
   - B. EF ELECTRICAL CURRENT (FLA; EACH).
2. DDC SHALL ALARM THE FOLLOWING
   - A. EXHAUST FAN FAILURE (EACH).

TRENDS: PROVIDE TREND DATA IN GRAPHIC FORMAT IN FIVE (5) MINUTE INCREMENTS FOR ALL CONTROL POINTS.

FUNCTION	POINT NAME	DESCRIPTION	SETTING (WITH UNITS)	RANGE (WITH UNITS)	IO TYPE	HOA REQ'D
PROOFS & SAFETIES	EF-S	EXHAUST FAN STATUS	NA	ON/OFF	BI	NA
	EF-FAU-S	EXHAUST FAN FAULT STATUS	NA	ALM/NORMAL	< >	NA
	EA-D-S	EXHAUST AIR DAMPER STATUS	NA	OPEN/CLOSED	BI	NA
	SYS-EMG-BUT-S	EMERGENCY HVAC SHUT DOWN STATUS	NA	ALM/NORMAL	BI	NA
SCHEDULING	SYS-OCC-SCHED	SYSTEM OCCUPANCY SCHEDULE	SEE OCCUPANCY SCHEDULE FOR INTERLOCKED SYSTEM	NA	<NET-OUT>	NA
START/STOP	SYS-OCC-C	OCCUPANCY COMMAND	NA	OCCUPIED(1)/UNOCCUPIED(3)	<NET-IN>	NA
	SYS-OCC	SYSTEM OCCUPANCY (ACTUAL)	NA	OCCUPIED(1)/UNOCCUPIED(3)	<NET-OUT>	NA
	EF-SS-1	EXHAUST FAN START/STOP	NA	ON/OFF	BO	Y
	EF-ENA	EF ENABLE	< >	< >	<NET-IN>	NA
	EA-D-C	EXHAUST AIR DAMPER COMMAND	NA	OPEN/CLOSED	BO	

NOTES:
1. POINTS INDICATED ARE AN ABBREVIATED LIST AND PROVIDED FOR REFERENCE ONLY. REFER TO EDITED POINTS SCHEDULE EXCEL FILE AS REQUIRED BY UFC 3-410-02

EXHAUST FAN INTERLOCK SCHEDULE

MARK	SERVICE	INTERLOCKED SYSTEM
EF-7	ANNEX	AHU-1.2

CONTROL DAMPER SCHEDULE

MARK	DAMPER ID	FUNCTION	TYPE	SIZE
EF-7	EAD/7	TWO POSITION	PARALLEL BLADE	10x10

NOTE:
IF THIS DRAWING IS LESS THAN 34" X 22"
IT IS A REDUCED SIZE DRAWING

SYM	DESCRIPTION	DATE	APPR
1	MOD P00005	05/2023	
2	MOD P00006 AND MOD P00007	10/2025	

NAVFAC

JOHN EDWARD BAMFORTH LICENSE No 68893 STATE OF FLORIDA PROFESSIONAL ENGINEER

BAMFORTH ENGINEERS & CONTRACTORS

AE INFO

APPROVED
FOR COMMANDER NAVFAC 11/21/2025

ACTIVITY: Approved by J. Scott Roberts, Asset Management Branch Head & Supervisory Facility Planner, PWD Beaufort, SC via email.

SATISFACTORY TO DATE 12/15/2022

DES MAB | DRW MAB | CHK JEB
PM/DM KTB / RLH
BRANCH MANAGER ALG
CHIEF ENG/ARCH EJA
FP ENGINEER DSN

DEPARTMENT OF THE NAVY
NAVAL FACILITIES ENGINEERING SYSTEMS COMMAND ~ MID-ATLANTIC
NAVAL FACILITIES ENGINEERING SYSTEMS COMMAND NORFOLK, VA
DC CODE:
MCAS BEAUFORT
BEAUFORT, SC
P-475 AIRCRAFT MAINTENANCE HANGAR - VOLUME 3 (OSF OPTION)
OSF - CONTROLS - EXHAUST FAN INTERLOCKED WITH AHU

SCALE: NOT TO SCALE
EPROJECT NO.: 1363603
CONSTR. CONTR. NO.
NAVFAC DRAWING NO. 12860226
SHEET 1025 OF 1412
OMI708

DRAWFORM REVISION: 25 AUGUST 2020

Autodesk Docs://20042 VAFA1 300 FS Maintenance Hangar/20042 FS3 Maint Hangar_OSF Shop Areas_MEP_v2024.rvt
11/5/2025 8:36:30 AM

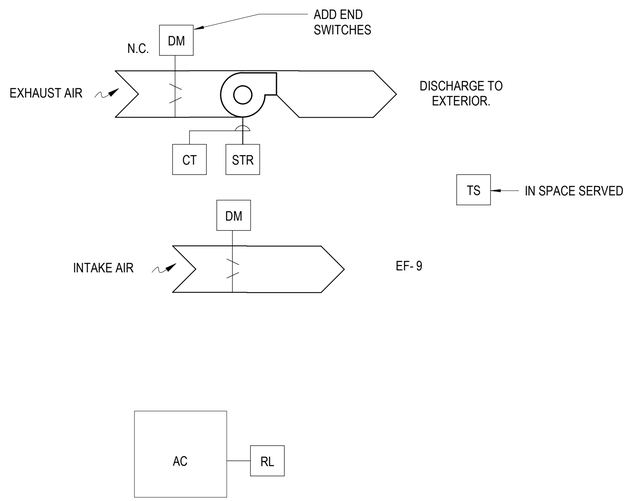

A1 SCHEMATIC CONTROL DIAGRAM - EF - VENTILATION
NOT TO SCALE

EXHAUST FAN CONTROL

WHEN THE SPACE TEMPERATURE RISES ABOVE SETPOINT, 80 DEGREES F (ADJUSTABLE), THE EXHAUST AIR AND INTAKE AIR DAMPER SHALL BE COMMANDED OPEN. WHEN THE EXHAUST AIR AND INTAKE AIR DAMPERS ARE PROVEN OPEN, THE EXHAUST FAN SHALL BE ENABLED AND COMMANDED TO RUN.

WHEN THE SPACE TEMPERATURE DROPS 4 DEGREES F (ADJUSTABLE) BELOW SETPOINT, THE EXHAUST FAN SHALL BE DISABLED AND COMMANDED TO STOP. WHEN THE EXHAUST FAN STATUS IS PROVEN OFF, THE EXHAUST AIR AND INTAKE AIR DAMPERS SHALL BE COMMANDED CLOSE.

PROVIDE POSITIVE EXHAUST FAN STATUS VIA CURRENT SENSING RELAY AT FAN MOTOR STARTER.

AIR COMPRESSOR INTAKE AIR CONTROL

REGARDLESS OF SPACE TEMPERATURE, THE INTAKE AIR DAMPER SHALL BE COMANDED OPEN WHEN ANY AIR COMPRESSOR STATUS IS ENERGIZED. WHEN ALL AIR COMPRESSOR RUN STATUSES ARE DE-ENERGIZED THE INTAKE AIR DAMPER CONTROL SHALL DEFAULT TO THE EXHAUST FAN CONTROL SEQUENCE.

EXHAUST FAN H-O-A SWITCHES

HAND: WITH THE H-O-A SWITCH IN THE HAND POSITION, THE EXHAUST FAN SHALL START AND RUN CONTINUOUSLY, SUBJECT TO SAFETIES AND DAMPER PROOFS. FAN SHALL BE UNDER MANUAL OPERATOR CONTROL.

OFF: WITH THE H-O-A SWITCH IN THE OFF POSITION, THE EXHAUST FAN SHALL STOP.

AUTO: WITH THE H-O-A SWITCH IN THE AUTO POSITION, THE EXHAUST FAN SHALL START AND RUN SUBJECT TO THE SUPPLY FAN RUNNING AND SAFETIES AND DAMPER PROOFS. FAN SHALL BE UNDER CONTROL OF THE DDC HARDWARE.

PROOFS AND SAFETIES

THE EXHAUST FAN AND ALL DDC HARDWARE CONTROL LOOPS SHALL BE SUBJECT TO PROOFS AND SAFETIES. SAFETIES SHALL BE DIRECT-HARDWIRE INTERLOCKED TO THE MOTOR STARTER. DDC HARDWARE SHALL MONITOR ALL PROOFS AND SAFETIES AND FAILURE OF ANY PROOF OR ACTIVATION OF ANY SAFETY SHALL RESULT IN ALL CONTROL LOOPS BEING DISABLED AND THE EF FAN BEING COMMANDED OFF UNTIL RESET.

SYSTEM MONITORING AND ALARMS

IF ANY PIECE OF EQUIPMENT FAILS TO PROVE STATUS AFTER IT IS COMMANDED, WITH A 20 SECOND (ADJUSTABLE) TIME DELAY, AN ALARM SHALL BE SENT TO THE DDC. THIS INCLUDES FANS AND DAMPERS.

1. DDC SHALL MONITOR AND DISPLAY :
   - A. EXHAUST FAN STATUS (ON/OFF' EACH).
   - B. EF ELECTRICAL CURRENT (FLA; EACH).
2. DDC SHALL ALARM THE FOLLOWING
   - A. EXHAUST FAN FAILURE (EACH).

TRENDS: PROVIDE TREND DATA IN GRAPHIC FORMAT IN FIVE (5) MINUTE INCREMENTS FOR ALL CONTROL POINTS.

CONTROL DAMPER SCHEDULE

MARK	DAMPER ID	FUNCTION	TYPE	SIZE
EF-9	EAD/9	TWO POSITION	PARALLEL BLADE	12x12
INTAKE	IAD/9	TWO POSITION	PARALLEL BLADE	48x48

FUNCTION	POINT NAME	DESCRIPTION	SETTING (WITH UNITS)	RANGE (WITH UNITS)	IO TYPE	HOA REQ'D
PROOFS & SAFETIES	EF-S	EXHAUST FAN STATUS	NA	ON/OFF	BI	NA
	EF-FAU-S	EXHAUST FAN FAULT STATUS	NA	ALM/NORMAL	<__>	NA
	EA-D-S	EXHAUST AIR DAMPER STATUS	NA	OPEN/CLOSED	BI	NA
	IA-D-S	INTAKE AIR DAMPER STATUS	NA	OPEN/CLOSED	BI	NA
	AC-R-S	AIR COMPRESSOR RUN STATUS	NA	ON/OFF	BI	NA
SCHEDULING	SYS-OCC-SCHED	SYSTEM OCCUPANCY SCHEDULE	0600-1700	NA	<NET-OUT>	NA
START/STOP	SYS-OCC-C	OCCUPANCY COMMAND	NA	OCCUPIED(1)/UNOCCUPIED(3)	<NET-IN>	NA
	SYS-OCC	SYSTEM OCCUPANCY (ACTUAL)	NA	OCCUPIED(1)/UNOCCUPIED(3)	<NET-OUT>	NA
	EF-SS-1	EXHAUST FAN START/STOP	NA	ON/OFF	BO	Y
	EF-ENA	EF ENABLE	<__>	<__>	<NET-IN>	NA
	SP-T	SPACE TEMPERATURE (ACTUAL)	NA	<__>	AI	NA
	SP-T-SP	SPACE TEMPERATURE SETPOINT	<__>	<__>	AO	NA
	EA-D-C	EXHAUST AIR DAMPER COMMAND	<__>	OPEN/CLOSED	BO	NA
	IA-D-C	INTAKE AIR DAMPER COMMAND	<__>	OPEN/CLOSED	BO	NA

PLAN NORTH N

NOTE:
IF THIS DRAWING IS LESS THAN 34" X 22"
IT IS A REDUCED SIZE DRAWING

STM	DESCRIPTION	DATE	APPR
1	MOD P00005	05/2023	
2	MOD P00006 AND MOD P00007	10/2025	

NAVFAC

JOHN EDWARD BALL LICENSE No 66893 STATE OF FLORIDA PROFESSIONAL ENGINEER

BAMFORTH ENGINEERS & CONTRACTORS

AE INFO

APPROVED

FOR COMMANDER NAVFAC

ACTIVITY
Approved by J. Scott Roberts,
Asset Management Branch Head &
Supervisory Facility Planner, PWD
Beaufort, SC via email.

SATISFACTORY TO DATE 12/15/2022

DES MAB | DRW MAB | CHK JEB
PMDM KTB / RLH
BRANCH MANAGER ALG
CHIEF ENG/ARCH EJA
FP ENGINEER DSN

NAVAL FACILITIES ENGINEERING SYSTEMS COMMAND
NORFOLK, VA

BEAUFORT, SC

P-475 AIRCRAFT MAINTENANCE HANGAR - VOLUME 3 (OSF OPTION)

OSF - CONTROLS - EXHAUST FAN TEMPERATURE CONTROLLED

DEPARTMENT OF THE NAVY
NAVAL FACILITIES ENGINEERING SYSTEMS COMMAND ~ MID-ATLANTIC
DC CORE:
MCAS BEAUFORT

SCALE: NOT TO SCALE
EPROJECT NO.: 1363603
CONSTR. CONTR. NO.
NAVFAC DRAWING NO. 12860227
SHEET 1026 OF 1412

OMI709

DRAWFORM REVISION: 25 AUGUST 2020

Autodesk Docs://2042 MFA1 302 FB Maintenance Hangar/2042 F35 Maint Hangar_OSF Shop Annex_MEc/2024.rvt
11/5/2025 8:36 AM

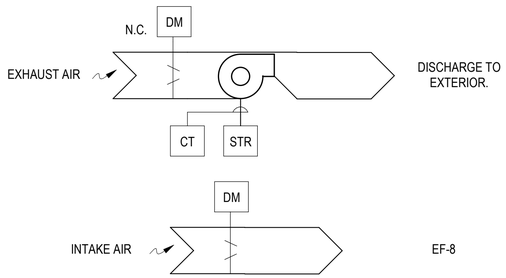

C1 SCHEMATIC CONTROL DIAGRAM - EF - OSF
NOT TO SCALE

EXHAUST FAN CONTROL

WHEN THE SPACE OCCUPANCY STATUS IS OCCUPIED, THE EXHAUST AIR AND INTAKE AIR DAMPER SHALL BE COMMANDED OPEN. WHEN THE EXHAUST AIR AND INTAKE AIR DAMPERS ARE PROVEN OPEN, THE EXHAUST FAN SHALL BE ENABLED AND COMMANDED TO RUN.

WHEN THE SPACE OCCUPANCY STATUS IS UN-OCCUPIED, THE EXHAUST FAN SHALL BE DISABLED AND COMMANDED TO STOP. WHEN THE EXHAUST FAN STATUS IS PROVEN OFF, THE EXHAUST AIR AND INTAKE AIR DAMPERS SHALL BE COMMANDED CLOSE.

PROVIDE POSITIVE EXHAUST FAN STATUS VIA CURRENT SENSING RELAY AT FAN MOTOR STARTER.

EXHAUST FAN H-O-A SWITCHES

HAND: WITH THE H-O-A SWITCH IN THE HAND POSITION, THE EXHAUST FAN SHALL START AND RUN CONTINUOUSLY, SUBJECT TO SAFETIES AND DAMPER PROOFS. FAN SHALL BE UNDER MANUAL OPERATOR CONTROL.

OFF: WITH THE H-O-A SWITCH IN THE OFF POSITION, THE EXHAUST FAN SHALL STOP.

AUTO: WITH THE H-O-A SWITCH IN THE AUTO POSITION, THE EXHAUST FAN SHALL START AND RUN SUBJECT TO THE SUPPLY FAN RUNNING AND SAFETIES AND DAMPER PROOFS. FAN SHALL BE UNDER CONTROL OF THE DDC HARDWARE.

PROOFS AND SAFETIES

THE EXHAUST FAN AND ALL DDC HARDWARE CONTROL LOOPS SHALL BE SUBJECT TO PROOFS AND SAFETIES. SAFETIES SHALL BE DIRECT-HARDWIRE INTERLOCKED TO THE MOTOR STARTER. DDC HARDWARE SHALL MONITOR ALL PROOFS AND SAFETIES AND FAILURE OF ANY PROOF OR ACTIVATION OF ANY SAFETY SHALL RESULT IN ALL CONTROL LOOPS BEING DISABLED AND THE EF FAN BEING COMMANDED OFF UNTIL RESET.

EMERGENCY AIR DISTRIBUTION SHUTOFF

ENABLED FORM THE EMERGENCY AIR SHUTOFF PANEL, REFERENCE SEQUENCE OF OPERATION

SYSTEM MONITORING AND ALARMS

IF ANY PIECE OF EQUIPMENT FAILS TO PROVE STATUS AFTER IT IS COMMANDED, WITH A 20 SECOND (ADJUSTABLE) TIME DELAY, AN ALARM SHALL BE SENT TO THE DDC. THIS INCLUDES FANS AND DAMPERS.

1. DDC SHALL MONITOR AND DISPLAY :
   - A. EXHAUST FAN STATUS (ON/OFF' EACH).
   - B. EF ELECTRICAL CURRENT (FLA; EACH).
   - C. H-O-A SWITCH POSITION.
2. DDC SHALL ALARM THE FOLLOWING
   - A. EXHAUST FAN FAILURE (EACH).
   - B. H-O-A SWITCH NOT IN 'AUTO' POSITION (60 MINUTE DELAY).

TRENDS: PROVIDE TREND DATA IN GRAPHIC FORMAT IN FIVE (5) MINUTE INCREMENTS FOR ALL CONTROL POINTS.

CONTROL DAMPER SCHEDULE

MARK	DAMPER ID	FUNCTION	TYPE	SIZE
EF-8	EAD/8	TWO POSITION	PARALLEL BLADE	24x24
INTAKE	IAD/8	TWO POSITION	PARALLEL BLADE	104x36

FUNCTION	POINT NAME	DESCRIPTION	SETTING (WITH UNITS)	RANGE (WITH UNITS)	IO TYPE	HOA REQ'D
PROOFS & SAFETIES	EF-S	EXHAUST FAN STATUS	NA	ON/OFF	BI	NA
	EF-FAU-S	EXHAUST FAN FAULT STATUS	NA	ALM/NORMAL	< >	NA
	IA-D-S	INTAKE AIR DAMPER STATUS	NA	OPEN/CLOSED	BI	NA
	EA-D-S	EXHAUST AIR DAMPER STATUS	NA	OPEN/CLOSED	BI	NA
	SYS-EMG-BUT-S	EMERGENCY HVAC SHUT DOWN STATUS	NA	ALM/NORMAL	BI	NA
SCHEDULING	SYS-OCC-SCHED	SYSTEM OCCUPANCY SCHEDULE	24/7 OPERATION	NA	<NET-OUT>	NA
H-O-A SWITCHES	EF-HOA-S-1	EXHAUST FAN HOA STATUS	NA	HAND/OFF/AUTO	<NET-IN>	[~]
START/STOP	SYS-OCC-C	OCCUPANCY COMMAND	NA	OCCUPIED(1)/UNOCCUPIED(3)	<NET-IN>	NA
	SYS-OCC	SYSTEM OCCUPANCY (ACTUAL)	NA	OCCUPIED(1)/UNOCCUPIED(3)	<NET-OUT>	NA
	EF-SS-1	EXHAUST FAN START/STOP	NA	ON/OFF	BO	Y
	EF-ENA	EF ENABLE	<__>	< >	<NET-IN>	NA
	IA-D-C	INTAKE AIR DAMPER COMMAND	<__>	OPEN/CLOSED	BO	NA
	EA-D-C	EXHAUST AIR DAMPER COMMAND	<__>	OPEN/CLOSED	BO	NA

NOTES:
1. POINTS INDICATED ARE AN ABBREVIATED LIST AND PROVIDED FOR REFERENCE ONLY. REFER TO EDITED POINTS SCHEDULE EXCEL FILE AS REQUIRED BY UFC 3-410-02

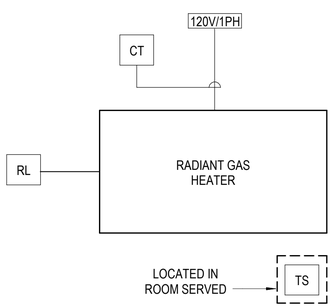

A1 SCHEMATIC CONTROL DIAGRAM - RADIANT GAS HEATERS - OSF
NOT TO SCALE

RADIANT GAS HEATER CONTROL

THE RADIANT GAS HEATER SHALL BE ENABLED AND COMMANDED TO RUN WHEN THE SPACE TEMPERATURE FALLS BELOW SETPOINT, 50 DEGREE F (ADJ.). UPON A RISE IS SPACE TEMPERATURE ABOVE SPACE TEMPERATURE SETPOINT, THE RADIANT GAS HEATER SHALL BE DISABLED AND COMMANDED TO STOP.

RADIANT GAS HEATERS SHALL BE PROVIDED WITH AN INTEGRAL CONTROLLER. THE SIGNAL PROVIDED FROM THE CONTROL SYSTEM SHALL ONLY ACTIVATE THE RADIANT GAS HEATER.

PROVIDE POSITIVE RADIANT GAS HEATER STATUS VIA CURRENT SENSING RELAY AT RADIANT GAS HEATER CONNECTION.

SAFETIES

THE UNIT SHALL RUN SUBJECT TO THE UNIT MANUFACTURER'S SAFETIES BUILT INTO THE INTEGRAL CONTROLLER.

SYSTEM MONITORING AND ALARMS

IF ANY PIECE OF EQUIPMENT FAILS TO PROVE STATUS AFTER IT IS COMMANDED, WITH A 20 SECOND (ADJUSTABLE) TIME DELAY, AN ALARM SHALL BE SENT TO THE DDC.

1. DDC SHALL MONITOR AND DISPLAY:
   - A. RADIANT GAS HEATER STATUS (ON/OFF EACH).
   - B. ZONE TEMPERATURE.
2. DDC SHALL ALARM THE FOLLOWING:
   - A. RADIANT GAS HEATER FAILURE (EACH).
   - B. ZONE LOW TEMPERATURE (10 DEGREE F BELOW SETPOINT).

FUNCTION	POINT NAME	DESCRIPTION	SETTING (WITH UNITS)	RANGE (WITH UNITS)	IO TYPE	HOA REQ'D
PROOFS & SAFETIES	RGH-S-1	RADIANT GAS HEATER STATUS	NA	ON/OFF	BI	NA
	RGH-FAU-S-1	RADIANT GAS HEATER FAULT STATUS	NA	ALM/NORMAL	<___>	NA
SCHEDULING	SYS-OCC-SCHED	SYSTEM OCCUPANCY SCHEDULE	24/7 OPERATION	NA	<NET-OUT>	NA
START/STOP	RGH-SS-1	RADIANT GAS HEATER START/STOP	NA	ON/OFF	BO	N
	RGH-ENA	RGH ENABLE	< >	< >	<NET-IN>	NA
	SP-T	SPACE TEMPERATURE (ACTUAL)	NA	<__>	AI	NA
	SP-T-SP	SPACE TEMPERATURE SETPOINT	55°F	<___>	AO	NA

NOTES:
1. POINTS INDICATED ARE AN ABBREVIATED LIST AND PROVIDED FOR REFERENCE ONLY. REFER TO EDITED POINTS SCHEDULE EXCEL FILE AS REQUIRED BY UFC 3-410-02

NOTE:
IF THIS DRAWING IS LESS THAN 34" X 22"
IT IS A REDUCED SIZE DRAWING

SYM	DESCRIPTION	DATE	APPR
1	MOD P00005	05/2023	
2	MOD P00006 AND MOD P00007	10/2025	

NAVFAC

JOHN EDWARD BALL LICENSE No 66893 STATE OF FLORIDA PROFESSIONAL ENGINEER

BAMFORTH ENGINEERS & ARCHITECTS

AE INFO

APPROVED
FOR COMMANDER NAVFAC
ACTIVITY: Approved by J. Scott Roberts, Asset Management Branch Head & Supervisory Facility Planner, PWD Beaufort, SC via email.
SATISFACTORY TO DATE 12/15/2022

DES MAB	DRW MAB	CHK JEB	
PMDM	KTB / RLH		
BRANCH MANAGER	ALG		
CHIEF ENG/ARCH	EJA		
FP ENGINEER	DSN		

NAVAL FACILITIES ENGINEERING SYSTEMS COMMAND
NORFOLK, VA
DEPARTMENT OF THE NAVY
NAVAL FACILITIES ENGINEERING SYSTEMS COMMAND – MID-ATLANTIC
DC CORE
MCAS BEAUFORT
BEAUFORT, SC
P-475 AIRCRAFT MAINTENANCE HANGAR - VOLUME 3 (OSF OPTION)
OSF - CONTROLS - EXHAUST FANS & HEATERS - OSF

SCALE: 12" = 1'-0"
EPROJECT NO.: 1363603
CONSTR. CONTR. NO.
NAVFAC DRAWING NO. 12860228
SHEET 1027 OF 1412
OMI710

DRAWFORM REVISION: 25 AUGUST 2020

Autodesk Docs://30042 \ MFA T 507 F35 Maintenance Hangar/30042 F35 Maint Hangar_OSF Shop Annex_MEP_v2024.rvt
11/5/2025 8:36:51 AM

NATURAL GAS METER TRANSMITTER. REFER TO PLUMBING DRAWINGS FOR METER.

WATER METER TRANSMITTER. REFER TO PLUMBING DRAWINGS FOR METER.

NATURAL GAS METER

WATER METER

D1 UTILITY METERS - OSF

NOT TO SCALE

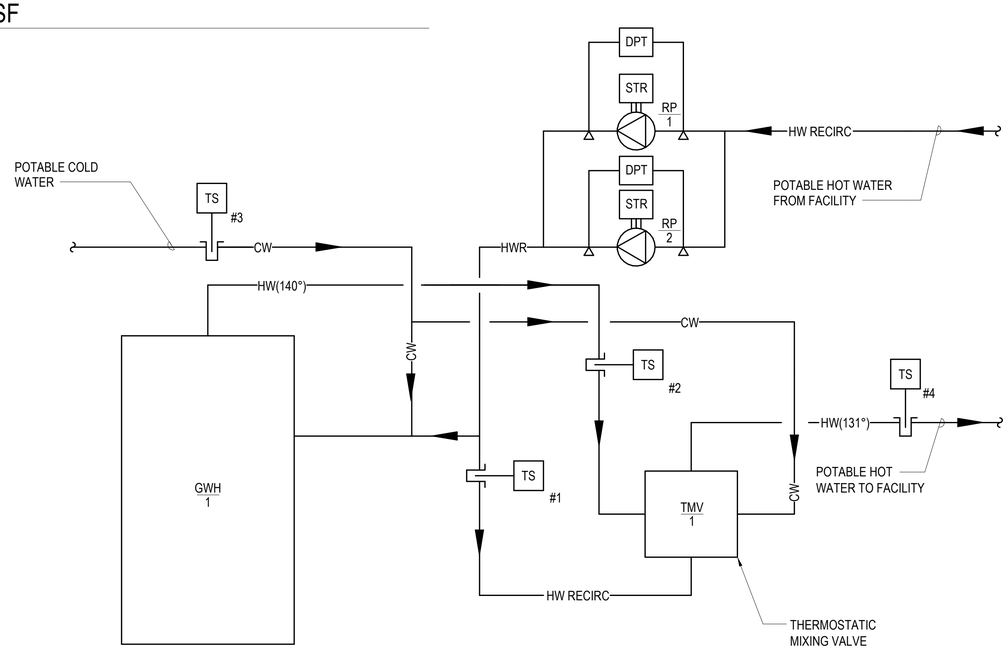

B1 POTABLE HOT WATER SYSTEM - OSF

NOT TO SCALE

POTABLE HOT WATER SYSTEM SEQUENCE OF OPERATION

DESCRIPTION

SYSTEM CONSISTS OF PACKAGED, STORAGE TYPE POTABLE HOT WATER HEATER, RECIRCULATING PUMPS, AND SYSTEM ACCESSORIES. ALL SETPOINT SHALL BE ADJUSTABLE THROUGH THE DDC.

SYSTEM ENABLE/DISABLE

RECIRCULATING PUMPS SHALL RUN DURING BUILDING OCCUPIED HOURS (MONDAY-FRIDAY, 0600-1800).

HAND-OFF-AUTO SWITCH

THE PUMP MOTOR STARTER SHALL HAVE AN H-O-A SWITCH.

HAND: WITH THE H-O-A SWITCH IN THE HAND POSITION, THE PUMP STARTS AND RUNS CONTINUOUSLY.

OFF: WITH THE H-O-A SWITCH IN THE OFF POSITION, THE PUMP STOPS.

AUTO: WITH THE H-O-A SWITCH IN THE AUTO POSITION, THE PUMP RUNS SUBJECT TO THE HOT WATER PUMP START/STOP COMMAND.

LEAD/LAG RECIRCULATING PUMP CONTROL (RP-1, RP-2)

THE PUMPS ARE ALTERNATED TO RUN BASED ON ONE CALENDAR MONTH OR ON A USER DEFINED SCHEDULE. DURING THE CHANGEOVER, THE LAG PUMP IS STARTED. WHILE MAINTAINING PUMP FLOW AND THE LAG PUMP STATUS HAS BEEN PROVEN FOR 30 SECONDS (ADJUSTABLE) THE LEAD PUMP SHALL STOP. IF THE STARTING PUMP'S STATUS IS NOT PROVEN AFTER 30 SECONDS (ADJUSTABLE) AN ALARM IS GENERATED, AND THE CHANGEOVER OPERATION ABORTED. UPON THE SUCCESSFUL CHANGEOVER, THE LEAD-LAG ASSIGNMENT IS AUTOMATICALLY REASSIGNED SO THAT THE ORIGINAL LEAD PUMP IS CHANGED TO LAG POSITION, AND THE ORIGINAL LAG PUMP IS NOW THE LEAD PUMP.

TRENDS

- INDIVIDUAL PUMP STATUS
- INDIVIDUAL PUMP START/STOP
- POTABLE HOT WATER SUPPLY TEMPERATURE
- INDIVIDUAL PUMP DIFFERENTIAL PRESSURE
- SYSTEM ENABLE/DISABLE
- INDIVIDUAL PUMP RUN-HOURS
- H-O-A- SWITCH POSITION (EA.)

ALARMS

- INDIVIDUAL PUMP ALARM
- H-O-A- SWITCH - HAND POSITION
- H-O-A- SWITCH - OFF POSITION

NOTE:
IF THIS DRAWING IS LESS THAN 34" X 22"
IT IS A REDUCED SIZE DRAWING

STM	DESCRIPTION	DATE	APPR
1	MOD P00005	05/2023	
2	MOD P00006 AND MOD P00007	10/2025	

NAVFAC

JOHN EDWARD BAILEY LICENSE No 66893 STATE OF FLORIDA PROFESSIONAL ENGINEER

SEAL

BAMFORTH ENGINEERS - ARCHITECTS

A/E INFO

APPROVED

FOR COMMANDER NAVFAC 11/21/2025

ACTIVITY: Approved by J. Scott Roberts, Asset Management Branch Head & Supervisory Facility Planner, PWD Beaufort, SC via email.

SATISFACTORY TO DATE 12/15/2022

DES MAB	DRW MAB	CHK JEB	
PMDM			KTB / RLH
BRANCH MANAGER			ALG
CHIEF ENG/ARCH			EJA
FP ENGINEER			DSN

DEPARTMENT OF THE NAVY
NAVAL FACILITIES ENGINEERING SYSTEMS COMMAND
DC CORE:
MCAS BEAUFORT

NAVAL FACILITIES ENGINEERING SYSTEMS COMMAND ~ MID-ATLANTIC
NORFOLK, VA

BEAUFORT, SC

P-475 AIRCRAFT MAINTENANCE HANGAR - VOLUME 3 (OSF OPTION)

OSF - CONTROLS - POTABLE HOT WATER SYSTEM - OSF

SCALE: NOT TO SCALE

EPROJECT NO.: 1363603

CONSTR. CONTR. NO.

NAVFAC DRAWING NO. 12860229

SHEET 1028 OF 1412

OMI711

DRAWFORM REVISION: 25 AUGUST 2020

Autodesk Docs://2042 MFA1 302 F3 Maintenance Hangar/2042 F3 Maint Hangar_OSF Shop Annex_MEc.rvt24.rvt
11/3/2025 8:36:52 AM

FUNCTION	POINT NAME	DESCRIPTION	SETTING (WITH UNITS)	RANGE (WITH UNITS)	IO TYPE	HOA REQ'D
PROOFS & SAFETIES	PMP-S-P1	PUMP STATUS	NA	ON/OFF	BI	NA
	PMP-S-P2	PUMP STATUS	NA	ON/OFF	BI	NA
SYSTEM ENABLE	POTABLE HW-SYS-ENA	POTABLE HOT WATER SYSTEM ENABLE	<___>	<___>	NET-IN	NA
	POTABLE HW-SYS-DIS	POTABLE HOT WATER SYSTEM DISABLE	<___>	<___>	NET-IN	NA
METERING	BWM-I	BUILDING WATER METER	HARDWIRE TO WM	<___>	AI	NA
	BGM-1	BUILDING GAS METER	HARDWIRE TO GM	<___>	AI	NA
PUMPS	PMP-SS-P1	PUMP START/STOP	<___>	START/STOP	BO	Y
	PMP-SS-P2	PUMP START/STOP	<___>	START/STOP	BO	Y
	PMP-DIFFERENTIAL PRESSURE-P1	PUMP DIFFERENTIAL PRESSURE (ACTUAL)	NA	<___>	AI	NA
	PMP-DIFFERENTIAL PRESSURE-P2	PUMP DIFFERENTIAL PRESSURE (ACTUAL)	NA	<___>	AI	NA
THERMOSTATIC MIXING VALVE	POTABLE-HW-T-#1	POTABLE HOT WATER RECIRC TEMPERATURE (ACTUAL)	NA	<___>	<___>	NA
	POTABLE-HW-T-#2	POTABLE HOT WATER ENTERING TEMPERATURE (ACTUAL)	NA	<___>	<___>	NA
	POTABLE-HW-T-#3	POTABLE COLD WATER ENTERING TEMPERATURE (ACTUAL)	NA	<___>	<___>	NA
	POTABLE-HW-T-#4	POTABLE HOT WATER SUPPLY TEMPERATURE (ACTUAL)	NA	<___>	<___>	NA
	POTABLE-HW-T-SP	MIXING VALVE POTABLE HOT WATER SUPPLY TEMPERATURE SETPOINT	122 DEG. F	<___>	<___>	NA

NOTES:

1. POINTS INDICATED ARE AN ABBREVIATED LIST AND PROVIDED FOR REFERENCE ONLY. REFER TO EDITED POINTS SCHEDULE EXCEL FILE AS REQUIRED BY UFC 3-410-02

NOTE:
IF THIS DRAWING IS LESS THAN 34" X 22"
IT IS A REDUCED SIZE DRAWING

SYM	DESCRIPTION	DATE	APPR
1	MOD P00005	05/2023	
2	MOD P00006 AND MOD P00007	10/2025	

NAVFAC

JOHN EDWARD BALL
LICENSE
No 66893
STATE OF FLORIDA
PROFESSIONAL ENGINEER

BAMFORTH
ENGINEERS + SURVEYORS

AE INFO

APPROVED

FOR COMMANDER NAVFAC

ACTIVITY
Approved by J. Scott Roberts,
Asset Management Branch Head &
Supervisory Facility Planner, PWD
Beaufort, SC via email.

SATISFACTORY TO DATE 12/15/2022

DES MAB DRW MAB CHK JEB

PM/DM KTB / RLH

BRANCH MANAGER ALG

CHIEF ENG/ARCH EJA

FP ENGINEER DSN

DEPARTMENT OF THE NAVY
NAVAL FACILITIES ENGINEERING SYSTEMS COMMAND ~ MID-ATLANTIC
NORFOLK, VA
DC CODE:
MCAS BEAUFORT
BEAUFORT, SC
P-475 AIRCRAFT MAINTENANCE HANGAR - VOLUME 3 (OSF OPTION)
OSF - POINTS SCHEDULE - POTABLE HOT WATER - OSF

SCALE:

EPROJECT NO.: 1363603

CONSTR. CONTR. NO.

NAVFAC DRAWING NO.
12860230

SHEET 1029 OF 1412

OMI712

DRAWFORM REVISION: 25 AUGUST 2020

Autodesk Docs://2042 MFA1 502 F35 Maintenance Hangar/2042 F35 Maint Hangar_OSF Shop Annex_MEL-02024.rvt
11/5/2025 8:36:32 AM

EMERGENCY AIR DISTRIBUTION SHUTDOWN RESPONSE SCHEDULE

MARK	AREA SERVED	ASSOCIATED DOAS UNIT	CLOSE CONTROL DAMPERS LEADING TO OUTSIDE	SHUTDOWN INTERLOCKED EXHAUST FANS	SHUTDOWN DOAS UNIT	EQUIPMENT SHALL CONTINUE TO OPERATE	AHU SHALL CONTINUE TO OPERATE IN WARMUP/COOLDOWN MODE
AHU-1.2	OSF	-	X	X	-	-	X
EF-8	OSF	-	-	X	-	-	-
EF-9	OSF MECH RM	-	-	-	-	X	-
AC-1.5	O106 COMM	-	-	-	-	X	-
AC-1.6	0108 ELEC	-	-	-	-	X	-

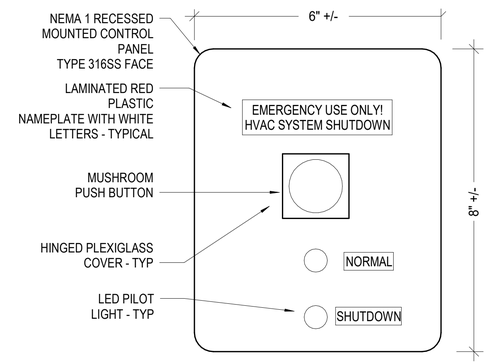

HVAC SHUTDOWN PANEL
FOR EMERGENCY USE ONLY

FUNCTION	POINT NAME	DESCRIPTION	SETTING (WITH UNITS)	RANGE (WITH UNITS)	IO TYPE	HOA REQ'D
EMERGENCY AIR DISTRIBUTION SHUTOFF						
	NCC-SYS-EMG-BUT-ENA	NON-CRITICAL CARE EMERGENCY HVAC SHUT DOWN ENABLE	NA	SEE EMERGENCY AIR DISTRIBUTION SHUTDOWN RESPONSE SCHEDULE DRAWING	<BI><NET-OUT>	NA
	NCC-SYS-EMG-BUT-S	NON-CRITICAL CARE EMERGENCY HVAC SHUT DOWN STATUS	NA	ALM/NORMAL	<BI><NET-OUT>	NA

NOTES:
1. POINTS INDICATED ARE AN ABBREVIATED LIST AND PROVIDED FOR REFERENCE ONLY. REFER TO EDITED POINTS SCHEDULE EXCEL FILE AS REQUIRED BY UFC 3-410-02

EMERGENCY AIR DISTRIBUTION SHUTOFF

PROVIDE EMERGENCY SHUTOFF SWITCHES IN THE HVAC CONTROL SYSTEM. THE SWITCHES WILL INITIATE A RESPONSE IN THE HVAC SYSTEMS AND LOW LEAKAGE CONTROL DAMPERS LEADING TO THE OUTSIDE REGARDLESS OF THE HAND/OFF/AUTO (HOA) POSITION WITHIN 30 SECONDS OF SWITCH ACTIVATION SUBJECT TO THE FOLLOWING, REFERENCE EMERGENCY AIR DISTRIBUTION SHUTDOWN RESPONSE SCHEDULE:

ALL SHUTDOWN SWITCHES SHALL BE PROTECTED FROM ACCIDENTAL ACTIVATION BY A FLIP UP COVER OR OTHER DOUBLE ACTIVATION DEVICE APPROVED BY THE USING AGENCY/CONTRACTING OFFICER.

PROVIDE SIGNAGE ABOVE EACH SWITCH(ES) FOR SYSTEMS SERVING NON-CRITICAL CARE SPACES WITH NOMENCLATURE "EMERGENCY USE ONLY! MECHANICAL HVAC SYSTEM SHUTDOWN". SIGNAGE SHALL BE RED BACKGROUND WITH WHITE LETTERS.

NORMAL STATUS SHALL ILLUMINATE GREEN LIGHT.

SHUTDOWN STATUS SHALL ILLUMINATE RED LIGHT.

A1 CONTROLS - EMERGENCY AIR DISTRIBUTION CUTOFF SWITCH
NOT TO SCALE

NOTE:
IF THIS DRAWING IS LESS THAN 34" X 22"
IT IS A REDUCED SIZE DRAWING

SYM	DESCRIPTION	DATE	APPR
1	MOD P00005	05/2023	
2	MOD P00006 AND MOD P00007	10/2025	

NAVFAC

JOHN EDWARD BAILEY LICENSE No 66893 STATE OF FLORIDA PROFESSIONAL ENGINEER
SEAL

BAMFORTH ENGINEERS • CONTRACTORS
A/E INFO

APPROVED
FOR COMMANDER NAVFAC
ACTIVITY: Approved by J. Scott Roberts, Asset Management Branch Head & Supervisory Facility Planner, PWD Beaufort, SC via email.
SATISFACTORY TO DATE 12/15/2022

DES MAB	DRW MAB	CHK JEB	
PM/DM	KTB / RLH		
BRANCH MANAGER	ALG		
CHIEF ENG/ARCH	EJA		
FP ENGINEER	DSN		

DEPARTMENT OF THE NAVY
NAVAL FACILITIES ENGINEERING SYSTEMS COMMAND
NAVAL FACILITIES ENGINEERING SYSTEMS COMMAND ~ MID-ATLANTIC
NORFOLK, VA
DC CORE:
MCAS BEAUFORT
BEAUFORT, SC
P-475 AIRCRAFT MAINTENANCE HANGAR - VOLUME 3 (OSF OPTION)
OSF - CONTROLS - EMERGENCY AIR DISTRIBUTION SHUTDOWN

SCALE: NOT TO SCALE
EPROJECT NO.: 1363603
CONSTR. CONTR. NO.
NAVFAC DRAWING NO. 12860231
SHEET 1030 OF 1412
OMI713
DRAWFORM REVISION: 25 AUGUST 2020

Autodesk Docs://2042 MFA1 302 FB Maintenance Hangar/2042 F35 Maint Hangar_OSF Shop Annex_MEc-0224.rvt
11/5/2025 8:36:33 AM

AIR HANDLING UNIT SCHEDULE

GENERAL			SUPPLY FAN														COOLING COIL													
											MOTOR							CAP. (MBTU/HR)		AIR TEMP (°F)							WATER TEMP (°F)			
																				ENTER		LEAVING								
MARK	LOCATION	TYPE	TOTAL SUPPLY (CFM)	OUTSIDE AIR (CFM)	EXTERNAL STATIC PRESSURE (IN. OF W.C.)	WHEEL TYPE	WHEEL SIZE (IN)	WHEEL DRIVE	CLASS	MAX SPEED (RPM)	HP	FLA	MCA	MOCP	VOLTS	PHASE	AIR QUANTITY (CFM)	TOTAL	SENSIBLE	DB	WB	DB	WB	MAX ROWS	MAX FACE VEL (FPM)	MAX AIR P.D. (IN. H20)	ENT	LV	WATER FLOW RATE (GPM)	MAX WATER PRESS DROP (FT. W.C).
AHU-1.2	LEVEL 1 MECH ROOM	SEMI-CUSTOM	2,530	840	2.3	PLUG	-	DIRECT	-	-	1@5	22	27.5	45	208	3	2,530	152.1	79.0	80.4	70.6	52.0	51.5	6	450	0.5	44	56	25	10

AIR HANDLING UNIT SCHEDULE CONT.

HEATING COIL											
AIR QUANTITY (CFM)	CAP. (MBTU/HR)	AIR TEMP (°F)		MAX ROWS	MAX FACE VEL (FPM)	MAX AIR P.D. (IN. H20)	WATER TEMP (°F)		WATER FLOW RATE (GPM)	MAX WATER PRESS DROP (FT. W.C).	REMARKS
	TOTAL	ENTER DB	LEAVING DB				ENT	LV			
2,530	21.0	47.4	55.0	1	450	0.2	140	110	1.4	5	-

GENERAL NOTES:

1. 4" DEEP PREFILTERS TO HAVE AN AVERAGE EFFICIENCY OF 30% IN ACCORDANCE WITH ASHRAE TEST STANDARD, REFER TO FILTER SCHEDULE. SELECT FANS BASED ON FINAL FILTER PRESSURE DROP.
2. 12" DEEP FILTERS TO HAVE AN AVERAGE EFFICIENCY OF 95% IN ACCORDANCE WITH ASHRAE TEST STANDARD, REFER TO FILTER SCHEDULE. SELECT FANS BASED ON FINAL FILTER PRESSURE DROP.
3. EXTERNAL STATIC PRESSURE INCLUDES LOSSES FROM DIFFUSERS, REGISTERS, SUPPLY DUCTWORK, DAMPERS, AND AIR TERMINAL UNITS ONLY.
4. PROVIDE DOUBLE WALL CASING UNITS. UNIT CASING AND COIL SIZES BASED ON STANDARD FILTER SIZES AS SCHEDULED.
5. PLUG FANS TO HAVE PREMIUM EFFICIENCY MOTOR, DIRECT DRIVE.
6. CHILLED WATER AND HEATING WATER COILS (PIPED IN PARALLEL).
7. PROVIDE ALUMINUM FINS FOR COOLING COIL.
8. VARIABLE FREQUENCY DRIVES TO HAVE A MINIMUM INTERRUPTING FAULT RATING OF 65,000 AMPS - REFER TO VFD SCHEDULE ON ELECTRICAL DRAWINGS.
9. PROVIDE SPACE DOWNSTREAM OF COIL SECTIONS FOR UVC EMITTERS. UVC EMITTERS TO BE PROVIDED WITH AHU.
10. REFER TO AHU COMPONENT LAYOUTS FOR ARRANGEMENT OF AHU AND CASING DEMOUNT SEAMS REQUIRED.

AIR HANDLING UNIT FAN SOUND DATA

RELATED AIR HANDLING SYSTEM	MAXIMUM OUTLET OCTAVE BANDS								MAXIMUM INLET OCTAVE BANDS							
	63	125	250	500	1K	2K	4K	8K	63	125	250	500	1K	2K	4K	8K
AHU-1.2	71	81	75	74	71	70	62	53	71	69	65	67	64	64	58	50

GENERAL NOTES:

1. BASIS OF DESIGN AHU FAN SOUND DATA. DO NOT EXCEED THESE VALUES.
2. PROVIDE AIR HANDLING UNIT SUPPLY FAN OUTLET AND INLET SOUND DATA AS INDICATED AND PROVIDE SOUND DATA AT AIR HANDLING UNIT SUPPLY OUTLET AND RETURN INLET PLENUM CONNECTIONS.

THERMOMETER/PRESSURE GAGE SCHEDULE

SERVICE	THERMOMETER RANGE	SIMPLEX PRESSURE GAGE RANGE	COMPOUND PRESSURE GAGE RANGE
	(°F)	(PSIG)	(Hg TO PSIG)
CHWS	30 TO 130	0 TO 160	30" TO 150
CHWR	30 TO 130	0 TO 160	30" TO 150
HWS	30 TO 240	0 TO 160	30" TO 100
HWR	30 TO 240	0 TO 160	30" TO 100

GENERAL NOTES:

1. FOR STORAGE TANKS/ PRESSURE VESSELS RELATED TO SERVICES ABOVE, PROVIDE SIMILAR THERMOMETER AND PRESSURE GAGE AS NOTED FOR RELATED SERVICES.

EXHAUST FAN SCHEDULE

MARK	AREA SERVED	LOCATION	FAN DATA		AIR QUANTITY (CFM)	TOTAL STATIC PRESSURE (IN. H2O)	WHEEL SIZE (IN.)	MAX SPEED (RPM)	MAX SONE VALUE	MOTOR			REMARKS	INTERLOCK	MAXIMUM EXHAUST OCTAVE BANDS								SOUND POWER LwA
			TYPE	DRIVE						HP	VOLTS	PHASE			63	125	250	500	1K	2K	4K	8K	
EF-7	ANNEX	CEILING	INLINE	BELT	360	0.7	8	1525	11.0	1/2	208	3	-	AHU-1.2	79	82	71	69	61	57	55	50	71
EF-8	OSF	OSF	INLINE	BELT	4,240	0.7	18	1200	15.4	2	208	3	-	-	80	80	82	79	70	67	62	59	79
EF-9	O109 MECH	O109 MECH	INLINE	BELT	1,060	0.7	10	1703	13.6	1/2	208	3	-	-	79	84	75	76	65	61	61	56	76

DX SPLIT AIR CONDITIONING UNIT SCHEDULE

MARK	LOCATION	AIR QUANTITY (CFM)	COOLING CAPACITY					HEATING CAPACITY				MOTOR			REMARKS
			TOTAL (MBH)	SENSIBLE (MBH)	ENT. AIR (°F)		EER	HEAT PUMP (MBH)	ELEC RESIST (KW)	ENT AIR (°F)	COP	VOLTS	PHASE	FLA	
					DB	WB									
AC-1.5	O106 COMM	810	34	24	78	65	10.8	22.4	-	70	2.5	208	1	0.6	-
AC-1.6	0108 ELEC	705	22	16.5	78	65	12.2	15.7	-	70	2.6	208	1	0.6	-

GENERAL NOTES:

1. UNIT PERFORMACE IS A COMBINED RATING OF EACH AC UNIT WITH THE CONNECTED CONDENSING UNIT.
2. PROVIDE UNITS WITH INTEGRAL CONDENSATE PUMP.

CONDENSING UNIT SCHEDULE

MARK	LOCATION	COOLING		HEATING CAPACITY	ELECTRICAL					EER RATING	REFRIGERANT	RELATED EQUIPMENT	REMARKS
		TOT CAP (MBH)	AMB TEMP (°F)		VOLTS	PHASE	HERTZ	MCA	MOP				
CU-1.5	GRADE	34	98	22.4	208	1	60	25	30	10.8	R410A	AC-1.5	-
CU-1.6	GRADE	22	98	15.7	208	1	60	19	25	12.2	R410A	AC-1.6	-

NOTE:
IF THIS DRAWING IS LESS THAN 34" X 22"
IT IS A REDUCED SIZE DRAWING

STM	DESCRIPTION	DATE	APPR
1	MOD P00005	05/2023	
2	MOD P00006 AND MOD P00007	10/2025	

NAVFAC

JOHN EDWARD BAILEY LICENSE No 66893 STATE OF FLORIDA PROFESSIONAL ENGINEER

BAMFORTH ENGINEERS & ARCHITECTS

AE INFO

APPROVED

FOR COMMANDER NAVFAC

ACTIVITY
Approved by J. Scott Roberts,
Asset Management Branch Head &
Supervisory Facility Planner, PWD
Beaufort, SC via email.

SATISFACTORY TO DATE 12/15/2022

DES MAB | DRW MAB | CHK JEB
PMDM KTB / RLH
BRANCH MANAGER ALG
CHIEF ENG/ARCH EJA
FP ENGINEER DSN

NAVAL FACILITIES ENGINEERING SYSTEMS COMMAND
NORFOLK, VA

DEPARTMENT OF THE NAVY
NAVAL FACILITIES ENGINEERING SYSTEMS COMMAND ~ MID-ATLANTIC
DC CORE:
MCAS BEAUFORT
BEAUFORT, SC
P-475 AIRCRAFT MAINTENANCE HANGAR - VOLUME 3 (OSF OPTION)
OSF / SHOP ANNEX - MECHANICAL SCHEDULES

SCALE: NOT TO SCALE
EPROJECT NO.: 1363603
CONSTR. CONTR. NO.
NAVFAC DRAWING NO. 12860232
SHEET 1031 OF 1412

OMH801

DRAWFORM REVISION: 25 AUGUST 2020

Autodesk Docs://2042 VAFA T 302 FB Maintenance Hangar/2042 F35 Maint Hangar_OSF Shop Annex_MEc.rvt22.rvt
11/5/2025 8:36 AM

AIR TERMINAL DEVICE SCHEDULE

MARK	FACE TYPE	MOUNTING	MATERIAL	FINISH	MAX. NC	NOM. FACE DIMENSIONS	NECK SIZE/ CFM	REMARKS
CD-A	LOUVERED	LAY-IN	ALUMINUM	OFF-WHITE	30	24X24	8X8/(0-220) 10X10/(225-345) 12X12/(350-500) 16X16/(505-710) 18X18/(715 +)	-
CD-B	LOUVERED	SURFACE	ALUMINUM	OFF-WHITE	30	12X12		-
CD-C	LOUVERED	SURFACE	ALUMINUM	OFF-WHITE	30	24X24		-
-	-	-	-	-	-	-	-	-
RR-A	PERFORATED	LAY-IN	ALUMINUM	OFF-WHITE	30	24X24	22X22	-
RR-B	PERFORATED	SURFACE	ALUMINUM	OFF-WHITE	30	12X12	10X10	-
RR-C	PERFORATED	SURFACE	ALUMINUM	OFF-WHITE	30	24X12	22X10	-
-	-	-	-	-	-	-	-	-
ER-A	PERFORATED	LAY-IN	ALUMINUM	OFF-WHITE	30	24X24	22X22	-
ER-B	PERFORATED	SURFACE	ALUMINUM	OFF-WHITE	30	12X12	10X10	-
ER-C	PERFORATED	SURFACE	ALUMINUM	OFF-WHITE	30	24X24	22X10	-
-	-	-	-	-	-	-	-	-
SSR-A	SIDEWALL FLANGED	SIDEWALL FLANGED	STEEL	OFF-WHITE	30	AS NOTED	AS NOTED	-
SRR-A	FIXED BLADE	SIDEWALL FLANGED	STEEL	OFF-WHITE	30	AS NOTED	AS NOTED	-
SER-A	FIXED BLADE	SIDEWALL FLANGED	STEEL	OFF-WHITE	30	AS NOTED	AS NOTED	-

GENERAL NOTES:
1. PROVIDE SQUARE TO ROUND THROAT ADAPTERS - ROUND RUNOUT SIZE SAME AS THROAT (I.E. 8X8 USE 8Ø) FOR ALL CEILING DIFFUSERS OR PROVIDE DIFFUSERS OR PROVIDE DIFFUSERS WITH INTERNAL ROUND THROAT CONNECTION.
2. REFER TO DETAILS FOR DUCT CONNECTIONS TO RETURN, EXHAUST, AND TRANSFER GRILLES USING PLENUM CONNECTIONS AS DETAILED.
3. LOUVERED AREA OF AIR TERMINAL DEVICE IS FULL NOMINAL FACE DIMENSIONS NOTED. REDUCED LOUVER AREAS ARE NOT ACCEPTABLE.

AIR FILTRATION SCHEDULE

MARK	LOCATION	TYPE	AIR QUANTITY (CFM)	STATIC PRESSURE (IN. OF W.C.) INITIAL	STATIC PRESSURE (IN. OF W.C.) FINAL	FACE VELOCITY (FPM)	GROSS FILTER MEDIA AREA (SQ FT/FILTER)	FILTER EFFICIENCY (%)	MERV RATING	NUMBER AND SIZE	POSITION	NOTES
F-1.2.1	AHU-1.2	PANEL	2,530	0.28	0.9	365	7.3	30	8	(1) 20X24 (1) 24X24	PREFILTER	1,2
F-1.2.2	AHU-1.2	CARTRIDGE	2,530	0.68	1.5	335	8	95	14	(4) 12X24	PREFILTER	1,2
F-1.2.3	AHU-1.2 OA	PANEL	840	0.28	0.9	420	2	30	8	(1) 12X24	PREFILTER	3

GENERAL NOTES:
1. FILTER RACK AND ENCLOSURE IS INTEGRAL TO AHU. PROVIDE WITH REQUIRED FILTER HOLDING FRAMES AND ACCESS.
2. AHU CASING AND COIL SELECTIONS BASED ON STANDARD FILTER SIZES INDICATED.
3. FILTER SECTION INSTALLED IN DUCTWORK WITH FILTER GLIDEPACK.

INFRARED RADIANT HEATER SCHEDULE

MARK	AREA SERVED	CAPACITY (MBH)	LENGTH (FT)	ELECTRICAL VOLTS	ELECTRICAL PHASE	REMARKS
RGH/B.1-4	OSF	50	30	115	1	-

VIBRATION ISOLATION SCHEDULE

MARK	UNIT SERVED	BASE TYPE	MOUNTING TYPE	MINIMUM DEFLECTION (IN.)	MINIMUM QUANTITY	CONCRETE FOUNDATION THICKNESS	NOTES
V-1	EF-7	-	C	0.75	4	-	-
V-2	EF-8	-	C	0.75	4	-	-
V-3	EF-9	-	C	0.75	4	-	-
V-4	TYPICAL AHU'S	U	A	0.25	-	-	-

GENERAL NOTES:
1. PROVIDE NEOPRENE PADS AT AIR HANDLING UNIT BASE RAILS AND CONCRETE PADS AT EACH DEMOUNT SEAM PER UNIT - TYPICAL.

AIR FLOW MEASURING STATION SCHEDULE

MARK	AIR QUANTITY (CFM)	MAX STATIC PRESSURE (IN. OF W.C.)	NOMINAL DUCT DIMENSIONS (IN)	SERVICE	LOCATION	REMARKS
AFMS-1.2.1	2,530	0.10	-	AHU-1.2 SA	FAN INLET	-
AFMS-1.2.2	840	0.10	16x12	AHU-1.2 OA	DUCT MOUNT	-
AFMS-1.2.3	1,690	0.10	24x12	AHU-1.2 RA	DUCT MOUNT	-

GENERAL NOTES:
1. FOR DUCT STYLE AIR FLOW MEASURING STATIONS, COORDINATE ACTUAL SIZE REQUIRED WITH APPROVED DUCT SHOP DRAWINGS PROCESS.

AIR TERMINAL UNIT SCHEDULE

MARK	SERVED BY AHU	AIR VALVE INLET SIZE (IN)	AIR VALVE AIR QUANTITY MAX. (CFM)	AIR VALVE AIR QUANTITY MIN. (CFM)	MAX AIR PRESS. DROP (IN H20)	REHEAT COIL (AIR SIDE) HEATING CAPACITY (BTUH)	REHEAT COIL (AIR SIDE) E.A.T. (°F)	REHEAT COIL (AIR SIDE) L.A.T. (°F)	REHEAT COIL (WATER SIDE) E.W.T. (°F)	REHEAT COIL (WATER SIDE) L.W.T. (°F)	REHEAT COIL (WATER SIDE) WATER QUANTITY (GPM)	REHEAT COIL (WATER SIDE) MAX. WATER PRESS. DROP (FT)
1.2.1	AHU-1.2	12	935 CFM	790 CFM	0.5	25596	55	85	140	110	1.7	2
1.2.2	AHU-1.2	12	935 CFM	790 CFM	0.5	25596	55	85	140	110	1.7	2
1.2.3	AHU-1.2	6	260 CFM	260 CFM	0.5	8424	55	85	140	110	0.6	2
1.2.4	AHU-1.2	6	480 CFM	480 CFM	0.5	15552	55	85	140	110	1	2

CONTROL VALVE SCHEDULE

MARK	FUNCTION	TYPE	RANGE	MAXIMUM PRESSURE DROP (PSI)	Cv	CLOSE -OFF RATING (PSI)	FLOW (GPM)	MINIMUM BODY SIZE (IN)
CV-1.2.1	AHU-1.2 COOLING COIL	2-WAY MODULATING	4-20 MA	5.0	13.8	80	25	1
CV-1.2.2	AHU-1.1 HEATING COIL	2-WAY MODULATING	4-20 MA	5.0	0.7	80	1.4	1/2
CV-A	TYPICAL ATU HEATING COIL	2-WAY MODULATING	4-20 MA	-	-	-	-	-
CV-B	TYPICAL UH HEATING COIL	2-WAY MODULATING	4-20 MA	-	-	-	-	-

UNIT HEATER SCHEDULE

MARK	AREA SERVED	TYPE	AIR QUANTITY (CFM)	HEATING COIL MBTUH	HEATING COIL E.W.T	HEATING COIL GPM	HEATING COIL P.D. FT. W.C.	FAN HP	FAN VOLTS	FAN PHASE	REMARKS
UH/C.1	MECH	HORIZONTAL	2200	60.9	140	4.0	10	1/3	115	1	-

DUCT CONSTRUCTION AND LEAK TEST SCHEDULE

MARK	DUCT PRESSURE CLASS (IN-WATER COLUMN) SUPPLY DUCT	RETURN DUCT	EXHAUST DUCT	OUTSIDE AIR DUCT	DUCTWORK ROUND/OVAL DUCT SEAL CLASS	ROUND/OVAL DUCT LEAK CLASS	RECTANGLE DUCT SEAL CLASS	RECTANGLE DUCT LEAK CLASS	DUCT TEST PRESSURE (IN. W.C.)	GALVANIZED	REMARKS
AHU-1.2	+4	-	-	-	A	2	A	4	4.0	GALVANIZED STEEL	1,2
AHU-1.2	-	-	-	-2	-	-	A	16	2.0	GALVANIZED STEEL	1,6
AHU-1.2	-	-3	-	-	A	4	A	8	3.0	GALVANIZED STEEL	1,3,5
AHU-1.2	+2	-	-	-	A	8	A	16	3.0	GALVANIZED STEEL	1,4
EF-7,8,9	-	-	-2	-	A	8	A	16	2.0	GALVANIZED STEEL	1,3

GENERAL NOTES:
1. TEST IN ACCORDANCE WITH SPEC SECTION 23 05 93.00 22 , "HVAC TESTING/ADJUSTING/BALANCING FOR HVAC" AND THE PROCEDURES IN SMACNA HVAC AIR DUCT LEAKAGE TEST MANUAL, 2ND EDITION.
2. INCLUDES DUCTWORK FROM FAN DISCHARGE TO UPSTREAM SIDE OF AIR TERMINAL UNITS.
3. INCLUDES DUCTWORK FROM FURTHEST REGISTER/GRILL CONNECTION TO AHU PLENUM/FAN THROAT.
4. INCLUDES DUCTWORK DOWNSTREAM OF AIR TERMINAL UNITS ONLY.
5. INCLUDES DUCTWORK FROM EXHAUST/RETURN/SUPPLY FAN DISCHARGE TO LOUVER PLENUM CONNECTION.
6. INCLUDES DUCTWORK FROM AHU PLENUM TO LOUVER PLENUM.

NOTE:
IF THIS DRAWING IS LESS THAN 34" X 22"
IT IS A REDUCED SIZE DRAWING

STM	DESCRIPTION	DATE	APPR
1	MOD P00005	05/2023	
2	MOD P00006 AND MOD P00007	10/2025	

NAVFAC

JOHN EDWARD BALL LICENSE No 66893 STATE OF FLORIDA PROFESSIONAL ENGINEER

BAMFORTH ENGINEERS & ARCHITECTS

AE INFO

APPROVED
FOR COMMANDER NAVFAC
ACTIVITY: Approved by J. Scott Roberts, Asset Management Branch Head & Supervisory Facility Planner, PWD Beaufort, SC via email.
SATISFACTORY TO DATE 12/15/2022

DES	MAB	DRW	MAB	CHK	JEB
PM/DM	KTB / RLH				
BRANCH MANAGER	ALG				
CHIEF ENG/ARCH	EJA				
FP ENGINEER	DSN				

DEPARTMENT OF THE NAVY
NAVAL FACILITIES ENGINEERING SYSTEMS COMMAND ~ MID-ATLANTIC NORFOLK, VA
DC CORE: MCAS BEAUFORT
NAVAL FACILITIES ENGINEERING SYSTEMS COMMAND
BEAUFORT, SC
P-475 AIRCRAFT MAINTENANCE HANGAR - VOLUME 3 (OSF OPTION)
OSF / SHOP ANNEX - MECHANICAL SCHEDULES

SCALE: NOT TO SCALE
EPROJECT NO.: 1363603
CONSTR. CONTR. NO.
NAVFAC DRAWING NO.: 12860233
SHEET 1032 OF 1412

OMH802

DRAWFORM REVISION: 25 AUGUST 2020

Autodesk Docs://2042 \ MBAT 502 F35 Maintenance Hangar/2042-F35 Maint Hangar_OSF Shop Annex_MEc.rvt
11/5/2025 8:36:56 AM