GENERAL ABBREVIATIONS

# AND SYMBOLS	
#	NUMBER / POUND
&	AND
@	AT
A	
A	AIR
A/C	AIR CONDITIONED
A/E	ARCHITECT-ENGINEER
ACM	ASBESTOS-CONTAINING MATERIAL(S)
ACT	ACOUSTICAL CEILING TILE
AD	AREA DRAIN
ADA	AMERICANS WITH DISABILITIES ACT
AFF	ABOVE FINISHED FLOOR
AFFF	AQUEOUS FILM FORMING FOAM
AHJ	AUTHORITY HAVING JURISDICTION
AHU	AIR HANDLING UNIT
ALT	ALTERNATE
ALUM	ALUMINUM
AMP	AMPERE
AO	ACCESS OPENING
APPROX	APPROXIMATELY
ARCH	ARCHITECTURAL
B	
BAL	BALANCE
BD	BOARD
BKOP	BACK OF PRECAST / BACK OF PANEL
BLDG	BUILDING
BLK	BLANK
BM	BEAM
BO	BOTTOM OF
BOP	BOTTOM OF PRECAST
BOS	BOTTOM OF STEEL
BRG	BEARING
BTUH	BRITISH THERMO UNIT / HOUR
C	
CCT	CUBICLE CURTAIN TRACK
CG	CORNER GUARD
CJ	CONTROL / CONSTRUCTION JOINT
CL	CENTER LINE
CLG	CEILING
CLL	COLUMN LINE
CLR	CLEAR
cm	CENTIMETER
CMU	CONCRETE MASONRY UNIT
CNTRL	CONTROL
CO2	CARBON DIOXIDE
COMM	COMMUNICATIONS
CONC	CONCRETE
COND	CONDITIONED
CONT	CONTINUED / CONTINUOUS
CONTR	CONTRACTOR
COORD	COORDINATE
CORR	CORRIDOR
CTJ	CONTRACTION JOINT
CTR	CENTER
D	
D	DEEP / DEPTH
dBA	UNIT OF SOUND
DEG	DEGREE
DIA	DIAMETER
DIMS	DIMENSIONS
DN	DOWN
DR	DOOR
DWG	DRAWING(S)
DWR	DRAWER

GENERAL ABBREVIATIONS

E	
EA	EACH
EE	EACH END
EJ	EXPANSION JOINT
EL	ELEVATION
ELEC	ELECTRICAL
ELEV	ELEVATOR
EOS	EDGE OF SLAB
EQ	EQUAL
EQUIP	EQUIPMENT
ETC	ET CETERA
EXIST	EXISTING
F	
F	FILLER
FE	FIRE EXTINGUISHER
FEC	FIRE EXTINGUISHER CABINET
FF	FINISHED FLOOR
FHC	FIRE HOSE CABINET
FIN	FINISHED
FLR	FLOOR
FO	FACE OF
FOS	FACE OF SLAB / FACE OF STUD
FP	FIRE PROTECTION
FT	FOOT / FEET
G	
G	GAS
GA	GAGE, GAUGE
GALV	GALVANIZED
GB	GRAB BAR
GC	GENERAL CONTRACTOR
H	
H	HIGH
HC	HANDICAP
HDWR	HARDWARE
HE	HORIZONTAL EXIT
HM	HOLLOW METAL
HR	HOUR
I	
IC	INTERCOM
ID	INSIDE DIAMETER
IDS	INTRUSION DETECTION SYSTEM
IMP	INSULATED METAL PANEL
IN	INCH(ES)
INFO	INFORMATION
INV	INVERTER
J	
JAN	JANITOR
JT	JOINT
K	
kPA	KILOPASCAL
L	
LB	POUND
LF	LINEAR FEET
LG	LARGE
LKR	LOCKER(S)
LL	ANGLE

GENERAL ABBREVIATIONS

M	
m	METERS
MACH	MACHINERY
MAINT	MAINTENANCE
Maj	MAJOR
MAX	MAXIMUM
MECH	MECHANICAL
MED	MEDIUM
MFR	MANUFACTURER
MIN	MINIMUM
MISC	MISCELLANEOUS
mm	MILLIMETERS
MO	MASONRY OPENING
MTL	METAL
N	
N	NORTH
N/A	NOT APPLICABLE
NIC	NOT IN CONTRACT
NO	NUMBER
NOM	NOMINAL
NTS	NOT TO SCALE
O	
O2	OXYGEN
OC	ON CENTER
OD	OUTSIDE DIAMETER
OPH	OPPOSITE HAND
OPNG	OPENING
OSF	OPERATION SUPPORT FACILITY
P	
P.D.	PANEL DIMENSION
PL	PLATE
PLAM	PLASTIC LAMINATE
PR	PAIR
PSF	POUNDS per SQUARE FOOT
PSI	POUNDS per SQUARE INCH
PT	PRESSURE TREATED / PAINT
Q	
QTR	QUARTER
QTY	QUANTITY
R	
R	RISER / RADIUS
R.O.	ROUGH OPENING
RAL	FEDERAL COLOR PALETTE
RCP	REFLECTED CEILING PLAN
RE	RESIDENT ENGINEER
REQ	REQUIRED
RF	RADIO FREQUENCY
RM	ROOM
RO	ROUGH OPENING
S	
S	SOUTH / SINK
SEC	SECONDARY
SF	SQUARE FEET
SHWR	SHOWER(S)
SIM	SIMILAR
SJ	SEISMIC JOINT
SOU	STANDARD OPERATING UNIT
SPECS	SPECIFICATION
SQ	SQUARE
SST	STAINLESS STEEL
ST	STAINED
STC	SOUND TRANSMISSION CLASS
STDT	STUDY
STL	STEEL
STOR	STORAGE
SWGR	SWITCHGEAR
T	

GENERAL ABBREVIATIONS

T	TREAD
TEL	TELEPHONE
TEMP	TEMPERATURE / TEMPORARY
THD	THRESHOLD
THK	THICKNESS
THRU	THROUGH
TLT	TOILET
TO	TOP OF
TOC	TOP OF CONCRETE (CURB)
TOF	TOP OF FOOTING
TOM	TOP OF MASONRY
TOP	TOP OF PRECAST
TOS	TOP OF STEEL
TYP	TYPICAL
U	
U	HEAT TRANSFER COEFFICIENT
U/C/B	UNDER COUNTER BASE
UC	UNDERCUT
UL	UNDERWRITERS LABORATORY
UNO	UNLESS NOTED OTHERWISE
UR	URINAL
V	
VAR	VARIES
VCT	VINYL COMPOSITION TILE
VERT	VERTICAL
VTR	VENT THRU ROOF
W	
W	WEST
W	WIDTH
W/	WITH
W/O	WITHOUT
WD	WOOD
WH	WALL HUNG / WATER HEATER
WP	WATERPROOF / WORKING UNIT
WT	WEIGHT
WWF	WELDED WIRE FABRIC

GENERAL SYMBOLS

00 VIEW NAME
0/0" = 1'-0"

A1 / AE101 — EXTERIOR ELEVATION REFERENCE

1 Ref / Ref / AE101 / Ref / 1 Ref — INTERIOR ELEVATION REFERENCE

A1 / AE312 — SECTION REFERENCE

DETAIL / SECTION NUMBER
A1 / AE101 — REFERENCE FOR DETAIL OR ENLARGED PLAN
SHEET NUMBER

1239 — ROOM NUMBER
STORAGE — ROOM NAME LINE 1
STORAGE — ROOM NAME LINE 2

092900.A01 — MATERIAL NOTES
INDEPENDANT SUFFIX MATERIAL OR NOTE SPECIFIER FOR CONDOC LIST
SPECIFICATION SECTION PREFIX

LEADER OR NOTATION

00 — NEW COLUMN REFERENCE AND GRID LINES

VAPOR BARRIER (DETAILS)

WORK ABOVE (PLANS)

REF. LINE
SEE 00/0-00-000 — PARTIAL PLAN REFERENCE LINE

BUILDING LEVEL OR ELEVATION. ALL BUILDINGS HAVE FIRST FLOOR SET AT 0'-0". COORDINATE WITH CIVIL DRAWINGS FOR FLOOR LEVEL RELATIVE TO SITE AND EACH OTHER.

SPOT ELEVATION RELATED TO DISTANCE ABOVE FIRST FLOOR

BREAK LINE

00 — REVISION IDENTIFIER

00 — KEY NOTE

℄ — CENTERLINE

PLAN NORTH
N
PLAN NORTH
TRUE NORTH

TYPICAL SHEET NUMBER FORMAT

PAE100A
- MAXIMUM OF 8 CHARACTERS
- SHEET SEQUENCE NUMBER
- SHEET TYPE
- LEVEL 2, DISCIPLINE DESIGNATOR
- BUILDING IDENTIFIER PREFIX, REFER TO BUILDING IDENTIFIER PREFIX LEGEND

BUILDING IDENTIFIER PREFIX LEGEND	
BUILDING NAME	BUILDING PREFIX
BUILDING 414	M
BUILDING 727	N
OSF / ANNEX	O
PARKING GARAGE	P
HANGAR	-

ARCHITECTURAL SYMBOLS

00 — GLAZING AND LOUVER PREFIXES
W = WINDOW
L = LOUVER
B = BORROWED LITE
S = STOREFRONT
G = GATE
C = CURTAINWALL
T = TRANSLUCENT PANEL

00 — PRECAST WALL PANEL

PARTITION TYPE NAMING CONVENTION

PARTITION SYMBOL ON PLAN

A3AC.1 — PARTITION TYPE SYMBOL
- FIRE RATING
- MODIFIERS
- STUD OR CMU SIZE
- ASSEMBLY TYPE

101.1 — DOOR NUMBERS: THE PRIMARY DOOR NUMBER IS THE ROOM NUMBER. A DECIMAL IS ADDED TO DISTINGUISH ADDITIONAL DOORS IN THE ROOM.

EXTERIOR FINISH LEGEND

PC-1	ARCHITECTURAL PRECAST CONCRETE SANDBLAST LIGHT - GPK 2569
MP-1	STANDING SEAM METAL PANEL KINGSPAN SLR DARK BRONZE

ADDITIONAL FINISHES:

MP-1	SOFFIT PANEL KINGSPAN SLR DARK BRONZE
FNC-1	EXTERIOR METAL FENCE RAL 7044
PT-1	EXTERIOR BOLLARDS SW 6072 VERSATILE GRAY
ST-1	STUCCO STUCCO TO MATCH SW 6072 VERSATILE GRAY
PM-1	PREFINISHED METAL KINGSPAN SLR DARK BRONZE
PM-2	PREFINISHED METAL MATCH SW-72 VERSATILE GRAY

NOTE:
IF THIS DRAWING IS LESS THAN 34" X 22"
IT IS A REDUCED SIZE DRAWING

SYM	DESCRIPTION	DATE	APPR
1	MOD P00005	05/2023	
2	MOD P00006 AND P00007	10/2025	

NAVFAC

STATE OF FLORIDA
BRIAN KEITH HOWARD
LICENSE NO. AR 0017156
REGISTERED ARCHITECT
SEAL

BAMFORTH
ARCHITECTURE ENGINEERING CONSULTANTS
AE INFO

APPROVED
FOR COMMANDER NAVFAC

ACTIVITY: Approved by J. Scott Roberts, Asset Management Branch Head & Supervisory Facility Planner, PWD Beaufort, SC via email.

SATISFACTORY TO DATE 12/15/2022

DES	EAD	DRW MEC	CHK BKH
PM/DM	KTB / RLH		
BRANCH MANAGER	CGM		
CHIEF ENG/ARCH	EJA		
FP ENGINEER	DSN		

DEPARTMENT OF THE NAVY
NAVAL FACILITIES ENGINEERING SYSTEMS COMMAND
DC CODE
NAVAL FACILITIES ENGINEERING SYSTEMS COMMAND ~ MID-ATLANTIC
NORFOLK, VA
MCAS BEAUFORT
BEAUFORT, SC
P-475 AIRCRAFT MAINTENANCE HANGAR - VOLUME 1 (BASE BID WITH OPTIONS)
ARCHITECTURAL ABBREVIATIONS AND SYMBOLS

SCALE: As indicated
EPROJECT NO.: 1363603
CONSTR. CONTR. NO.
NAVFAC DRAWING NO.: 12859346
SHEET 174 OF 1412

AS001

DRAWFORM REVISION: 28 AUGUST 2020

Autodesk Docs://20043 MFA F 502 F35 Maintenance Hangar/20043 F 535 Maint Hangar_Sheet.rvt
11/3/2025 8:08:47 PM

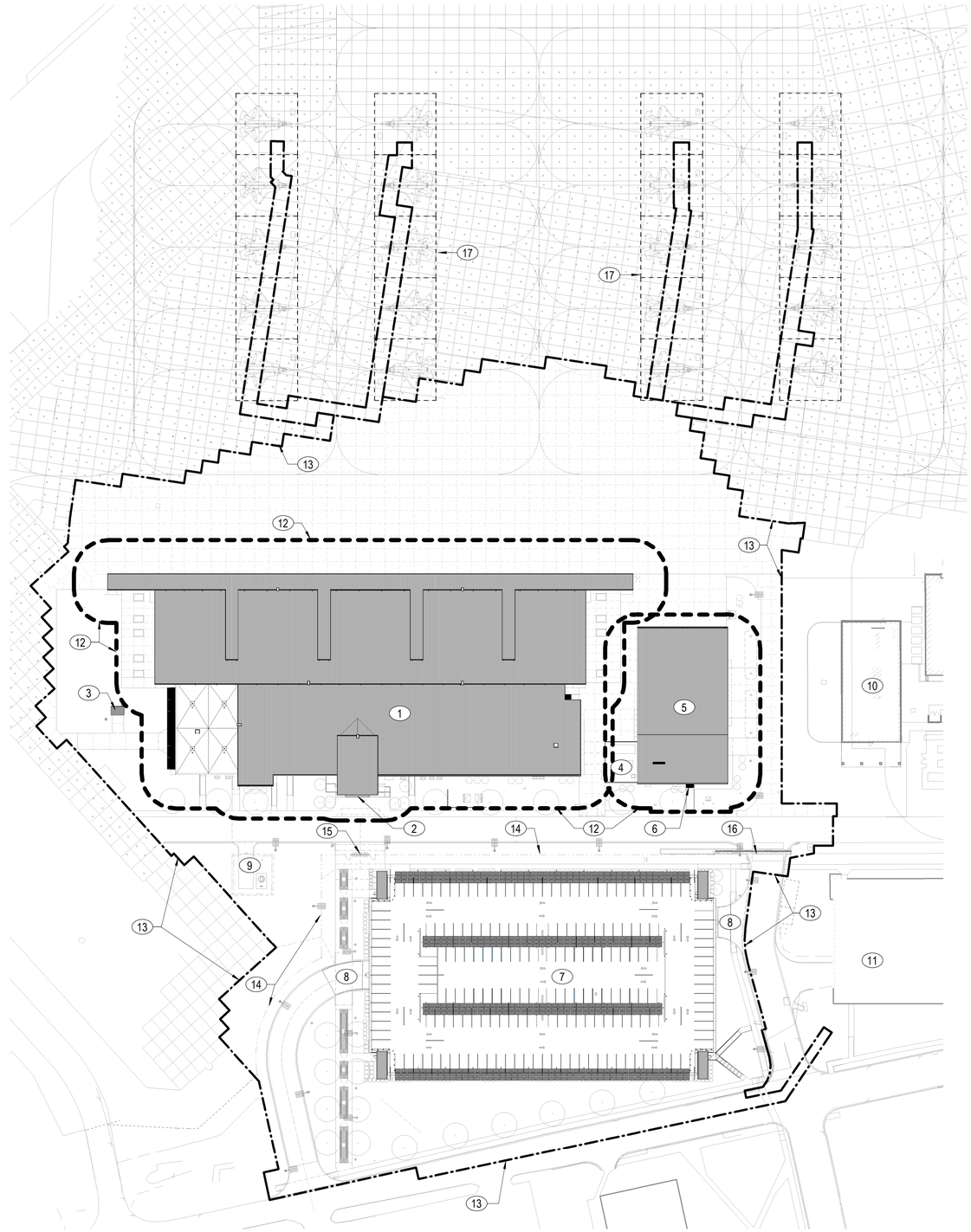

A2 ARCHITECTURAL SITE PLAN
1/64" = 1'-0"

VOLUME 3 - OAS401

NOTES:

SHEET NOTES:

A REFER TO SHEET AS001 FOR ARCHITECTURAL ABBREVIATIONS AND SYMBOLS.

B ARCHITECTURAL ELEVATIONS FOR GROUND FLOOR TOP OF SLAB IS DEFINED AS 0'-0". REFER TO CIVIL PLANS CG101-CG104 FOR SLAB ELEVATIONS RELATIVE TO NORTH AMERICAN VERTICAL DATUM (NAVD) SYSTEM.

C REFER TO VOLUME 2A, SHEET AG101 FOR EXTERIOR SIGNAGE LOCATIONS AND AG504 FOR EXTERIOR SIGNAGE ELEVATIONS AND MOUNTING HEIGHTS.

D REFER TO SHEETS CS101-CS104 FOR SITE LAYOUT, CG101-CG104 FOR GRADING PLANS, AND CU101-CU104 FOR UTILITY PLANS.

E REFER TO SHEETS LP101-LP104 FOR LANDSCAPE PLANS AND LF101 FOR LANDSCAPE FURNISHING PLAN.

KEY NOTES (00)

1 P475 MAINTENANCE HANGAR. REFER TO VOLUME 2A-2B FOR BUILDING INFORMATION.
2 P475 MAINTENANCE HANGAR - MAIN ENTRANCE.
3 OXYGEN TANK STORAGE. REFER TO SHEET AS401 FOR ADDITIONAL INFORMATION.
4 MECHANICAL YARD. REFER TO VOLUME 3, SHEET OAS401. PROVIDE, AS SHOWN, ONLY IF OSF OPTION IS AWARDED.
5 OPERATIONS SUPPORT FACILITY (OSF) / SHOP ANNEX. REFER TO VOLUME 3 FOR BUILDING INFORMATION. PROVIDE ONLY IF OSF OPTION IS AWARDED.
6 OPERATIONS SUPPORT FACILITY (OSF) / SHOP ANNEX - MAIN ENTRANCE.
7 PARKING GARAGE. REFER TO VOLUME 4 FOR BUILDING INFORMATION. PROVIDE ONLY IF PARKING GARAGE OPTION IS AWARDED.
8 PARKING GARAGE ENTRY/EXIT.
9 PUMP STATION. REFER TO VOLUME 1, SHEETS CU101 AND CU105 FOR ADDITIONAL INFORMATION.
10 EXISTING P464 OSF.
11 EXISTING PARKING GARAGE.
12 33 FOOT SETBACK.
13 LINE OF WORK DISTURBANCE, TYP.
14 RESTRICTED AREA SECURITY FENCE. REFER TO VOLUME 1, SHEETS CS101-CS103 FOR ADDITIONAL INFORMATION.
15 DOUBLE TANDEM TURNSTILES. REFER TO VOLUME 1, SHEETS CS101 AND CS508-CS509 FOR ADDITIONAL INFORMATION.
16 SLIDING GATE. REFER TO VOLUME 1, SHEETS CS102 AND CS510 FOR ADDITIONAL INFORMATION.
17 SUN SHADES, COORDINATE SUPPORTING UTILITIES SERVING THE AIRCRAFT MAINTENANCE UNDER THE SUN SHADES. REFER TO SPECIFICATION SECTION 13 31 33.00 22, PRE-ENGINEERED FRAMED FABRIC STRUCTURES, FOR ADDITIONAL INFORMATION.

***BASE BID / BID OPTION NOTE:**
IF REFERENCED OPTIONS ARE NOT SELECTED, REFER TO VOLUME 6 DRAWINGS FOR BASE BID ONLY INFORMATION.

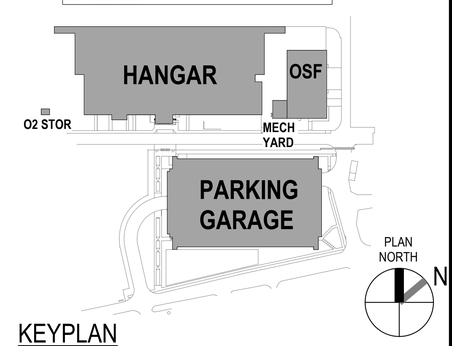

KEYPLAN

0 50' 100' 150' 200' 250'
1/64" = 1'-0" GRAPHIC SCALE

NOTE:
IF THIS DRAWING IS LESS THAN 34" X 22"
IT IS A REDUCED SIZE DRAWING

STM	DESCRIPTION	DATE	APPR
1	MOD P00005	05/2023	
2	MOD P00006 AND P00007	10/2025	

NAVFAC

STATE OF FLORIDA
BRIAN KEITH HOLLAWAY
REGISTERED ARCHITECT
SEAL

BAMFORTH
AE INFO

APPROVED
FOR COMMANDER NAVFAC

ACTIVITY:
Approved by J. Scott Roberts,
Asset Management Branch Head &
Supervisory Facility Planner, PWD
Beaufort, SC via email.

SATISFACTORY TO DATE: 12/15/2022

DES	EAD	DRW MEC	CHK BKH
PM/DM	KTB / RLH		
BRANCH MANAGER	CGM		
CHIEF ENG/ARCH	EJA		
FP ENGINEER	DSN		

DEPARTMENT OF THE NAVY
NAVAL FACILITIES ENGINEERING SYSTEMS COMMAND
DC CODE:
NAVAL FACILITIES ENGINEERING SYSTEMS COMMAND – MID-ATLANTIC
NORFOLK, VA
MCAS BEAUFORT
BEAUFORT, SC

P-475 AIRCRAFT MAINTENANCE HANGAR - VOLUME 1 (BASE BID WITH OPTIONS)

ARCHITECTURAL SITE PLAN - HANGAR AND OSF/SHOP ANNEX

SCALE: As indicated
EPROJECT NO.: 1363603
CONSTR. CONTR. NO.
NAVFAC DRAWING NO. 12859347
SHEET 175 OF 1412

AS100

DRAWFORM REVISION: 25 AUGUST 2020

Autodesk Docs://20042 MRAF 502 F35 Maintenance Hangar/20042 F35 Maint Hangar_Site.rvt
11/3/2025 8:11:15 PM

KEY NOTES (00)

1 P475 MAINTENANCE HANGAR. REFER TO VOLUME 2A-2B FOR BUILDING INFORMATION.
2 P475 MAINTENANCE HANGAR - MAIN ENTRANCE.
3 OPERATIONS SUPPORT FACILITY (OSF) / SHOP ANNEX. REFER TO VOLUME 3 FOR BUILDING INFORMATION. PROVIDE ONLY IF OSF OPTION IS AWARDED.
4 OPERATIONS SUPPORT FACILITY (OSF) / SHOP ANNEX - MAIN ENTRANCE.
5 MECHANICAL YARD. REFER TO VOLUME 3, SHEET OAS401. PROVIDE, AS SHOWN, ONLY IF OSF OPTION IS AWARDED.
6 RESTRICTED AREA SECURITY FENCE. REFER TO SHEETS CS101-CS104 FOR ADDITIONAL INFORMATION.
7 DOUBLE TANDEM TURNSTILES. REFER TO SHEETS CS101 AND CS508-CS509 FOR ADDITIONAL INFORMATION.
8 RESTRICTED AREA SECURITY FENCE AND SLIDING GATE. REFER TO SHEETS CS102 AND CS510 FOR ADDITIONAL INFORMATION.
9 MECHANICAL EQUIPMENT ONCONCRETE PAD. REFER TO VOLUME 2B, SHEETS MH101A AND MH101C FOR ADDITIONAL INFORMATION.
10 OXYGEN TANK STORAGE. REFER TO SHEET AS401 FOR ADDITIONAL INFORMATION.
11 FIRE HYDRANT, TYP. REFER TO SHEETS CS103-CS104 FOR ADDITIONAL INFORMATION.
12 LIGHT POLE, TYP. REFER TO SHEET ES101 FOR ADDITIONAL INFORMATION.
13 LINE OF WORK DISTURBANCE, TYP.
14 33 FOOT SETBACK.
15 EQUIPMENT SCREEN. REFER TO SHEET AS402 FOR ADDITIONAL INFORMATION.

NOTES:

SHEET NOTES:

A REFER TO SHEET AS001 FOR ARCHITECTURAL ABBREVIATIONS AND SYMBOLS.
B ARCHITECTURAL ELEVATIONS FOR GROUND FLOOR TOP OF SLAB IS DEFINED AS 0'-0". REFER TO CIVIL PLANS CG101-CG104 FOR SLAB ELEVATIONS RELATIVE TO NORTH AMERICAN VERTICAL DATUM (NAVD) SYSTEM.
C REFER TO VOLUME 2A, SHEET AG101 FOR EXTERIOR SIGNAGE LOCATIONS AND AG504 FOR EXTERIOR SIGNAGE ELEVATIONS AND MOUNTING HEIGHTS.
D REFER TO SHEETS CS103-CS104 FOR SITE LAYOUT, CG103-CG104 FOR GRADING PLANS, AND CU103-CU104 FOR UTILITY PLANS.
E REFER TO SHEETS LP103-LP104 FOR LANDSCAPE PLANS AND LF101 FOR LANDSCAPE FURNISHING PLAN.

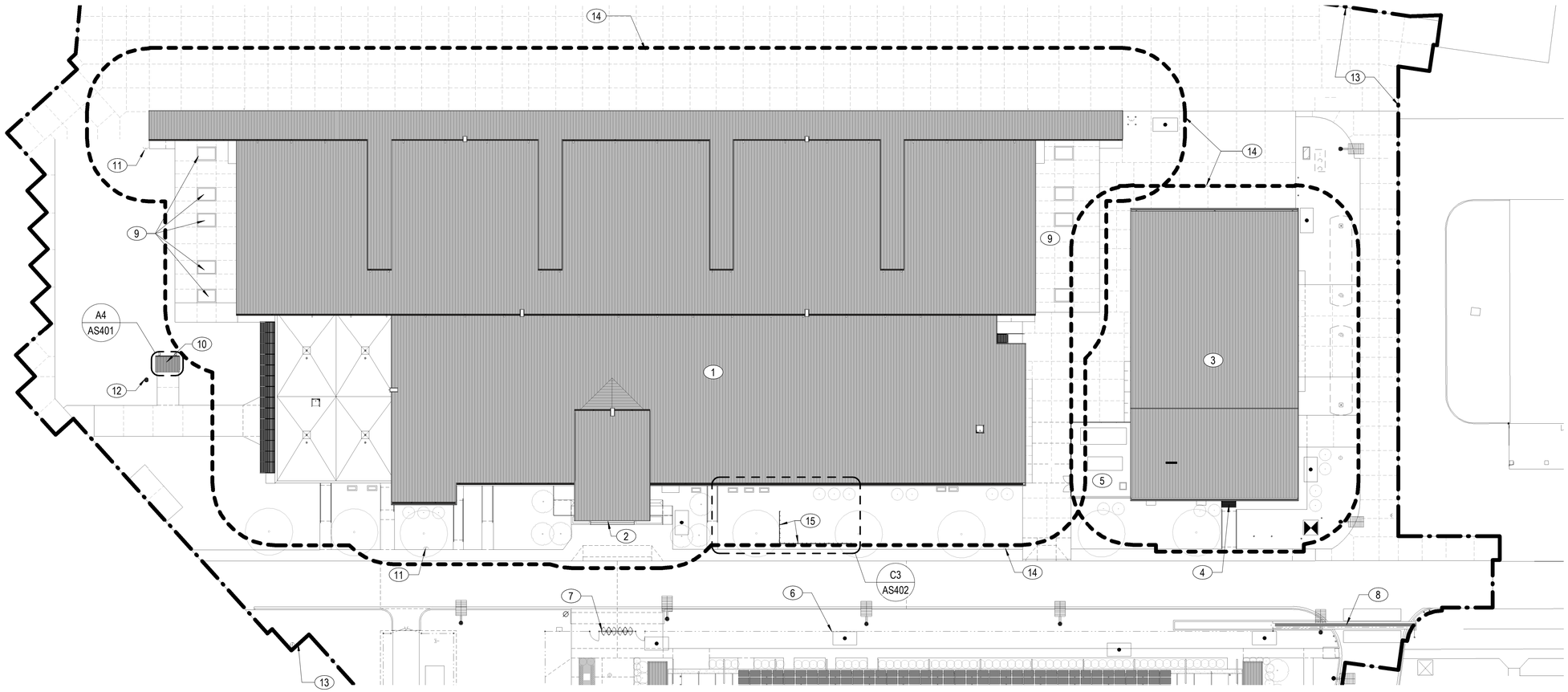

B1 ARCHITECTURAL SITE PLAN - HANGAR & OSF / SHOP ANNEX
1/32" = 1'-0"

AS100, VOLUME 3 - OAS401

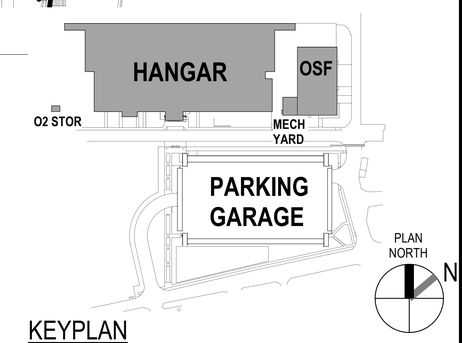

KEYPLAN

0 10' 40' 80' 120'
1/32" = 1'-0" GRAPHIC SCALE

***BASE BID / BID OPTION NOTE:**
IF REFERENCED OPTIONS ARE NOT SELECTED, REFER TO VOLUME 6 DRAWINGS FOR BASE BID ONLY INFORMATION.

NOTE:
IF THIS DRAWING IS LESS THAN 34" X 22"
IT IS A REDUCED SIZE DRAWING

SYM	DESCRIPTION	DATE	APPR
1	MOD P00005	05/2023	
2	MOD P00006 AND P00007	10/2025	

NAVFAC

STATE OF FLORIDA
BILLY KEITH HOLLOWAY
AR93022
REGISTERED ARCHITECT
SEAL

BAMFORTH
ARCHITECTURE | ENGINEERING | CONSULTING

AE INFO

APPROVED
FOR COMMANDER NAVFAC

ACTIVITY: Approved by J. Scott Roberts, Asset Management Branch Head & Supervisory Facility Planner, PWD Beaufort, SC via email.

SATISFACTORY TO DATE 12/15/2022

DES	EAD	DRW MEC	CHK BKH
PM/DM			KTB / RLH
BRANCH MANAGER			CGM
CHIEF ENG/ARCH			EJA
FP ENGINEER			DSN

DEPARTMENT OF THE NAVY
NAVAL FACILITIES ENGINEERING SYSTEMS COMMAND
NAVAL FACILITIES ENGINEERING SYSTEMS COMMAND ~ MID-ATLANTIC NORFOLK, VA
DC CORE
MCAS BEAUFORT
BEAUFORT, SC
P-475 AIRCRAFT MAINTENANCE HANGAR - VOLUME 1 (BASE BID WITH OPTIONS)
ARCHITECTURAL SITE PLAN - HANGAR AND OSF/SHOP ANNEX

SCALE: As indicated
EPROJECT NO.: 1363603
CONSTR. CONTR. NO.
NAVFAC DRAWING NO. 12859348
SHEET 176 OF 1412

AS100A

DRAWFORM REVISION: 25 AUGUST 2020

Autodesk Docs://2042 NAFA 502 735 Maintenance Hangar/2042 F35 Maint Hangar_Site.rvt
11/3/2025 8:11:29 PM

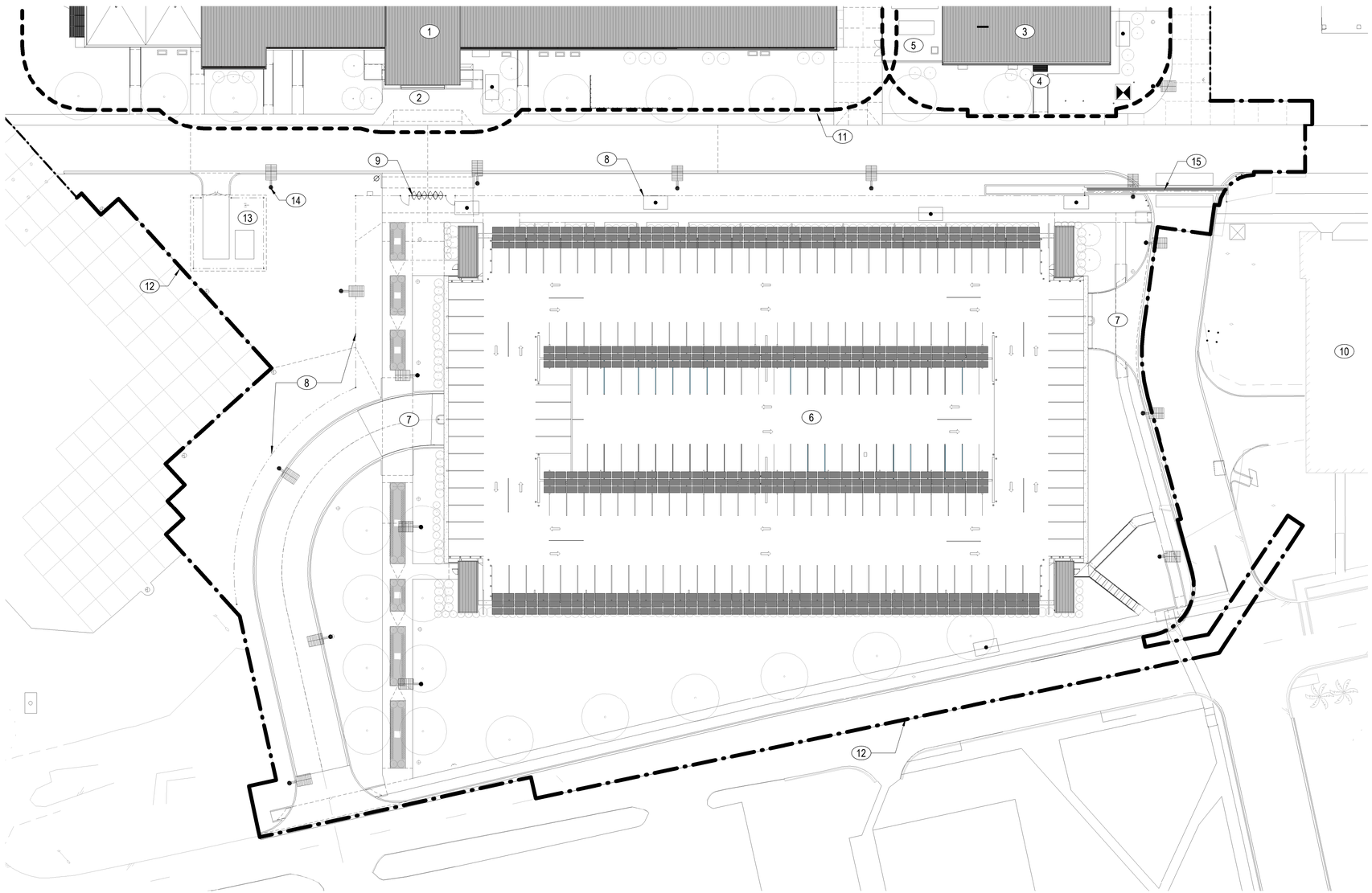

A1 ARCHITECTURAL SITE PLAN - PARKING GARAGE
1/32" = 1'-0"

AS100

***BASE BID / BID OPTION NOTE:**
IF REFERENCED OPTIONS ARE NOT SELECTED, REFER TO VOLUME 6 DRAWINGS FOR BASE BID ONLY INFORMATION.

NOTES:

SHEET NOTES:

A REFER TO SHEET AS001 FOR ARCHITECTURAL ABBREVIATIONS AND SYMBOLS.

B ARCHITECTURAL ELEVATIONS FOR GROUND FLOOR TOP OF SLAB IS DEFINED AS 0'-0". REFER TO CIVIL PLANS CG101-CG104 FOR SLAB ELEVATIONS RELATIVE TO NORTH AMERICAN VERTICAL DATUM (NAVD) SYSTEM.

C REFER TO VOLUME 2A, SHEET AG101 FOR EXTERIOR SIGNAGE LOCATIONS AND AG504 FOR EXTERIOR SIGNAGE ELEVATIONS AND MOUNTING HEIGHTS.

D REFER TO SHEETS CS101-CS102 FOR SITE LAYOUT, CG101-CG102 FOR GRADING PLANS, AND CU101-CU102 FOR UTILITY PLANS.

E REFER TO SHEETS LP101-LP102 FOR LANDSCAPE PLANS AND LF101 FOR LANDSCAPE FURNISHING PLAN.

KEY NOTES (00)

1 P475 MAINTENANCE HANGAR. REFER TO VOLUME 2A-2B FOR BUILDING INFORMATION.
2 P475 MAINTENANCE HANGAR - MAIN ENTRANCE.
3 OPERATIONS SUPPORT FACILITY (OSF) / SHOP ANNEX. REFER TO VOLUME 3 FOR BUILDING INFORMATION. PROVIDE ONLY IF OSF OPTION IS AWARDED.
4 OPERATIONS SUPPORT FACILITY (OSF) / SHOP ANNEX - MAIN ENTRANCE.
5 SERVICE YARD. REFER TO VOLUME 3, SHEET OAS401.
6 OPERATIONS SUPPORT FACILITY (OSF) / SHOP ANNEX. REFER TO VOLUME 3 FOR BUILDING INFORMATION. PROVIDE ONLY IF OSF OPTION IS AWARDED.
7 PARKING GARAGE ENTRY/EXIT.
8 RESTRICTED AREA SECURITY FENCE. REFER TO CS101-CS103 FOR ADDITIONAL INFORMATION.
9 DOUBLE TANDEM TURNSTILES. REFER TO SHEETS CS101 AND CS508-CS509 FOR ADDITIONAL INFORMATION.
10 EXISTING PARKING GARAGE.
11 33 FOOT SETBACK.
12 LINE OF WORK DISTURBANCE, TYP.
13 PUMP STATION. REFER TO VOLUME 1, SHEETS CU101 AND CU105 FOR ADDITIONAL INFORMATION.
14 LIGHT POLE, TYP. REFER TO SHEET ES101 FOR ADDITIONAL INFORMATION.
15 RESTRICTED AREA SECURITY FENCE AND SLIDING GATE. REFER TO SHEETS CS102 AND CS510 FOR ADDITIONAL INFORMATION.

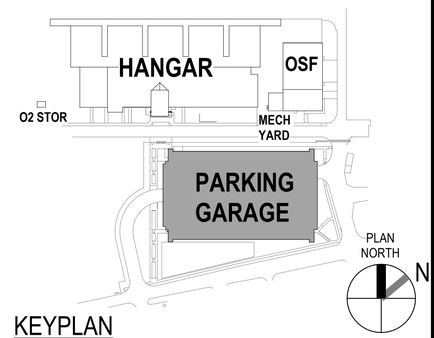

KEYPLAN

0 10' 40' 80' 120'
1/32" = 1'-0" GRAPHIC SCALE

NOTE:
IF THIS DRAWING IS LESS THAN 34" X 22"
IT IS A REDUCED SIZE DRAWING

STM	DESCRIPTION	DATE	APPR
1	MOD P00005	05/2023	
2	MOD P00006 AND P00007	10/2025	

NAVFAC

STATE OF FLORIDA
BILLY KEITH HOLLOWAY
AR93022
REGISTERED ARCHITECT
SEAL

BAMFORTH
ARCHITECTURE | ENGINEERING | CONSULTING

AE INFO

APPROVED
FOR COMMANDER NAVFAC

ACTIVITY
Approved by J. Scott Roberts,
Asset Management Branch Head &
Supervisory Facility Planner, PWD
Beaufort, SC via email.

SATISFACTORY TO DATE 12/15/2022

DES EAD | DRW MEC | CHK BKH
PMDM KTB / RLH
BRANCH MANAGER CGM
CHIEF ENG/ARCH EJA
FP ENGINEER DSN

DEPARTMENT OF THE NAVY
NAVAL FACILITIES ENGINEERING SYSTEMS COMMAND
DC CONE: MCAS BEAUFORT
NAVAL FACILITIES ENGINEERING SYSTEMS COMMAND ~ MID-ATLANTIC
NORFOLK, VA
BEAUFORT, SC
P-475 AIRCRAFT MAINTENANCE HANGAR - VOLUME 1 (BASE BID WITH OPTIONS)
ARCHITECTURAL SITE PLAN - PARKING GARAGE

SCALE: As indicated
EPROJECT NO.: 1363603
CONSTR. CONTR. NO.
NAVFAC DRAWING NO.: 12859349
SHEET 177 OF 1412
AS100B

DRAWFORM REVISION: 25 AUGUST 2020

Autodesk Docs://20042 MFA7 X02 F35 Maintenance Hangar/20042F35 Maint Hangar_Site.rvt
11/3/2025 8:11:45 PM

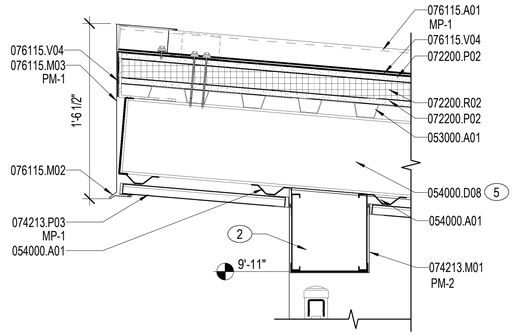

D1 SECTION DETAIL - HIGH EAVE

1 1/2" = 1'-0" AS401

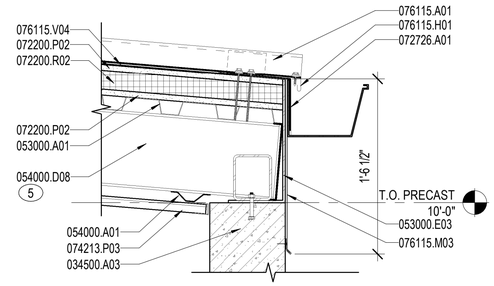

D3 SECTION DETAIL - LOW EAVE

1 1/2" = 1'-0" AS401

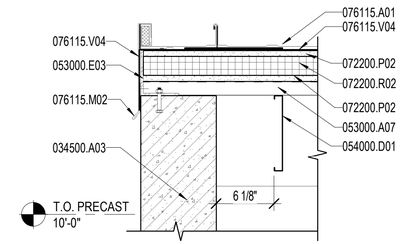

D4 SECTION DETAIL - RAKE

1 1/2" = 1'-0" AS401

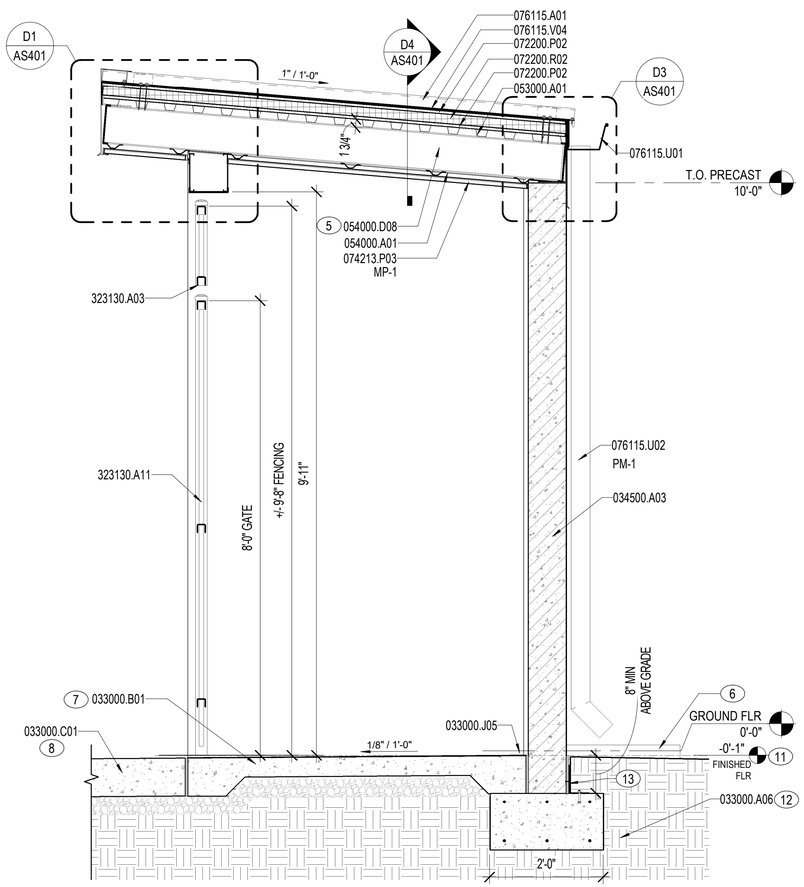

A1 BUILDING SECTION

3/4" = 1'-0" AS401

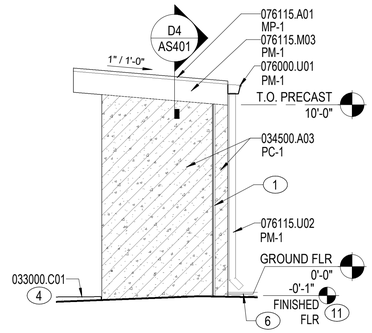

B3 ELEVATION - EAST

1/4" = 1'-0" AS401

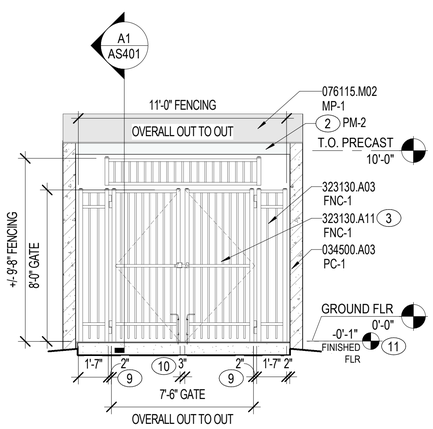

GATE HARDWARE:

* PROVIDE PLATE-WELDED LATCHES WITH INTERLOCKING COMPONENTS TO MEET BASE SECURITY STANDARDS.
* PROVIDE FOOT BOLTS WITH HOLD IN POSITION SLOTS. PROVIDE SLEEVE FOR FOOT BOLT IN OPEN AND CLOSED POSITION (BOTH SIDES).

A3 ELEVATION - SOUTH

1/4" = 1'-0" AS401

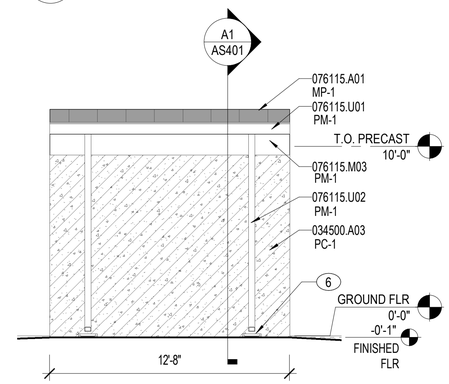

C4 NORTH ELEVATION

1/4" = 1'-0" AS401

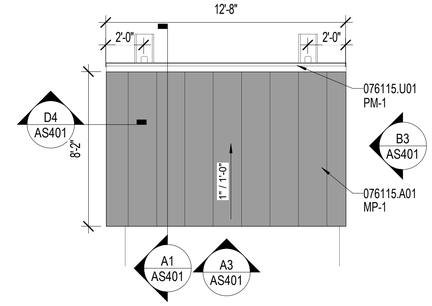

B4 ROOF PLAN

1/4" = 1'-0" AS401

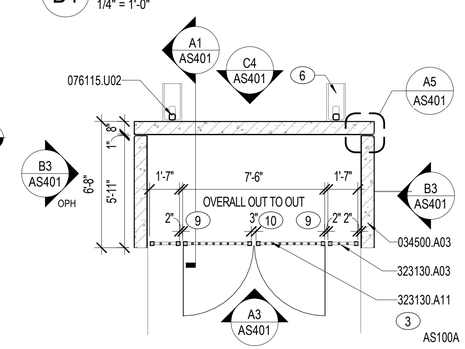

A4 FLOOR PLAN

1/4" = 1'-0" AS401

NOTES:

SHEET NOTES:

A REFER TO SHEET AS001 FOR ARCHITECTURAL ABBREVIATIONS AND SYMBOLS.
B REFER TO SHEET AS001 FOR EXTERIOR MATERIAL FINISH LEGEND.
C ARCHITECTURAL ELEVATIONS FOR GROUND FLOOR TOP OF SLAB IS DEFINED AS 0'-0". REFER TO CIVIL PLANS CG101-CG104 FOR SLAB ELEVATIONS RELATIVE TO NORTH AMERICAN VERTICAL DATUM (NAVD) SYSTEM.
D REFER TO SHEETS CS103, CG103, AND CU102 FOR SITE INFORMATION.
E REFER TO SHEET LP103 FOR LANDSCAPE INFORMATION.
F ARCHITECTURAL EXTERIOR DIMENSIONS ARE TO EXTERIOR FACE OF PRECAST PANEL AND FACE OF METAL STUD, UNO.

KEY NOTES (00)

1 PRECAST CONCRETE WALL JOINT. REFER TO DETAIL C4/AS401.
2 8" METAL STUD "BOX-BEAM". SHEAR CONNECT TO CONCRETE WALL AT SUPPORT.
3 DECORATIVE FENCE DOUBLE SWING GATE, 7'-6"W X 8'-0"H. FENCING MATERIAL TO MATCH OSF/SHOP ANNEX MECHANICAL YARD FENCE.
4 REFER TO SHEET CS103 AND DETAIL C1/CS501 FOR CONCRETE PAVEMENT INFORMATION.
5 8" METAL STUD JOIST @ 16" O.C.
6 DOWNSPOUT SPLASH BLOCK, CONCRETE, TYP.
7 4" CONCRETE SLAB REINFORCED WITH 6x6-W2.9xW2.9. 8"x8" TURNDOWN AROUND PERIMETER. PROVIDE 4" POROUS FILL.
8 REFER TO DETAIL C1/CS501.
9 HINGE CLEARANCE.
10 LATCH CLEARANCE.
11 REFER TO SHEET CG103 FOR GRADING INFORMATION.
12 CONCRETE FOOTING (3,000 PSI) REINFORCED WITH CONTINUOUS 3 - #4 AND #4 TIES AT 4'-0" ON CENTER.
13 PRECAST CONNECTION TO FOUNDATION - DESIGNED BY PRECAST MANUFACTURER. REFER TO SECTION C1/SB401 IN VOLUME 2B.

MATERIAL NOTES

033000.A06	CONCRETE FOOTING
033000.B01	CONCRETE SLAB
033000.C01	CONCRETE WALK
033000.J05	PREFORMED JOINT FILLER
034500.A03	PRECAST CONCRETE WALL PANEL
053000.A01	STEEL DECK
053000.A07	STEEL ROOF DECK
053000.E03	END CLOSURE
054000.A01	METAL FRAMING
054000.D01	METAL STUD
054000.D08	METAL STUD 8"
072200.P02	GLASS MAT GYPSUM PROTECTION BOARD
072200.R02	ROOF INSULATION BOARD
072726.A01	FLUID-APPLIED AIR BARRIER, VAPOR-RETARDING

MATERIAL NOTES

074213.M01	METAL TRIM
074213.P03	METAL SOFFIT PANEL SYSTEM
076000.U01	GUTTER
076115.A01	STANDING-SEAM METAL ROOF PANEL
076115.H01	METAL FLASHING
076115.M02	DRIP EDGE
076115.M03	FASCIA
076115.U01	GUTTER
076115.U02	DOWNSPOUT
076115.V04	HIGH TEMPERATURE RESISTANT UNDERLAYMENT
079200.Q02	BACKSTOP AND SEALANT
323130.A03	DECORATIVE METAL FENCE
323130.A11	DOUBLE SWING GATE

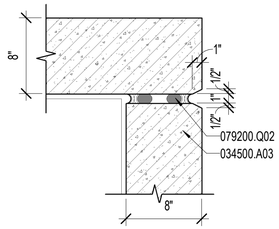

A5 PLAN DETAIL - PRECAST JOINT

1 1/2" = 1'-0" AS401

0 6" 1' 2'
1½" = 1'-0" GRAPHIC SCALE

0 4" 1' 2' 3' 4' 5'
3/4" = 1'-0" GRAPHIC SCALE

0 2' 4' 8' 12' 16'
1/4" = 1'-0" GRAPHIC SCALE

PLAN NORTH N

NOTE:
IF THIS DRAWING IS LESS THAN 34" X 22"
IT IS A REDUCED SIZE DRAWING

SYM	DESCRIPTION	DATE	APPR
1	MOD P00005	05/2023	
2	MOD P00006 AND P00007	10/2025	

NAVFAC

STATE OF FLORIDA
BILLY KEITH HOLLOWAY
AR93022
REGISTERED ARCHITECT
SEAL

BAMFORTH
ARCHITECTURE & DESIGN, P.A.
AE INFO

APPROVED
FOR COMMANDER NAVFAC 11/04/2022

ACTIVITY: Approved by J. Scott Roberts, Asset Management Branch Head & Supervisory Facility Planner, PWD Beaufort, SC via email.

SATISFACTORY TO DATE 12/15/2022

DES	EAD	DRW MCL	CHK BKH
PM/DM	KTB / RLH		
BRANCH MANAGER	CGM		
CHIEF ENG/ARCH	EJA		
FP ENGINEER	DSN		

DEPARTMENT OF THE NAVY
NAVAL FACILITIES ENGINEERING SYSTEMS COMMAND
DC CODE
NAVAL FACILITIES ENGINEERING SYSTEMS COMMAND – MID-ATLANTIC
NORFOLK, VA
MCAS BEAUFORT
BEAUFORT, SC

P-475 AIRCRAFT MAINTENANCE HANGAR - VOLUME 1 (BASE BID WITH OPTIONS)

PLANS, ELEVATIONS, SECTION, AND DETAILS - OXYGEN TANK STORAGE

SCALE: As indicated
EPROJECT NO.: 1363603
CONSTR. CONTR. NO.
NAVFAC DRAWING NO. 12859350
SHEET 178 OF 1412

AS401

DRAWFORM REVISION: 28 AUGUST 2020

Autodesk Docs://20043 MRA1 502 P3 Maintenance Hangar/20043 F3S1 Maint Hangar_Sheet.rvt
11/3/2025 8:11:44 PM

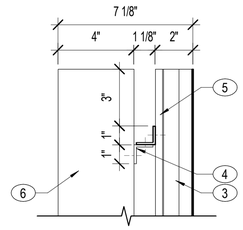

C2 SECTION DETAIL
3" = 1'-0" AS402

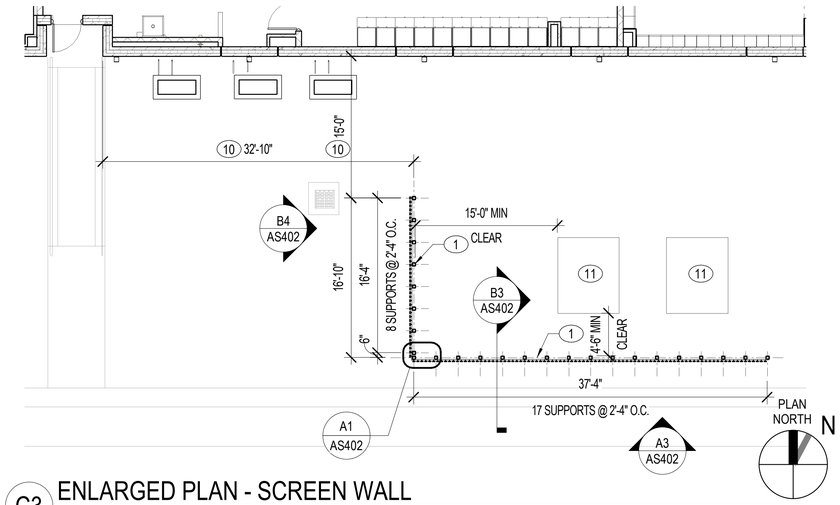

C3 ENLARGED PLAN - SCREEN WALL
1/8" = 1'-0" AS100A

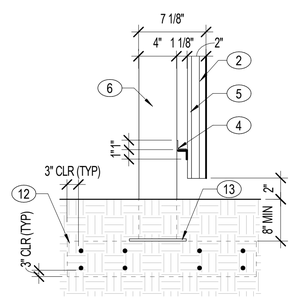

NOTE: BELOW GROUND NOT TO SCALE. FOOTING DIMENSIONS 1'-0" X 3'-6"

B2 SECTION DETAIL
1 1/2" = 1'-0" AS402

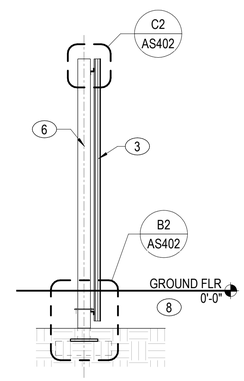

B3 SCREEN SECTION
1/2" = 1'-0" AS402

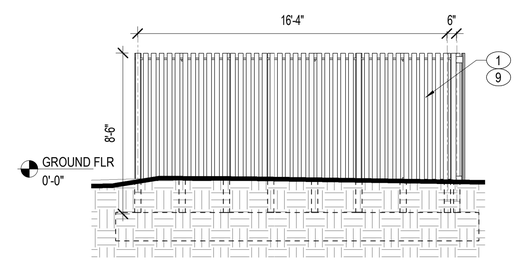

B4 WEST ELEVATION - SCREEN WALL
1/4" = 1'-0" AS402

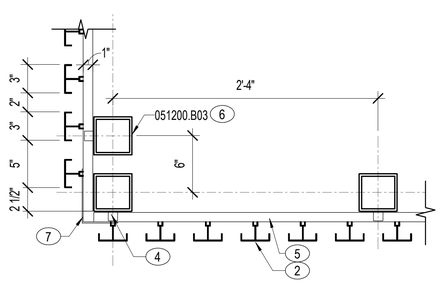

A1 PLAN DETAIL
1 1/2" = 1'-0" AS402

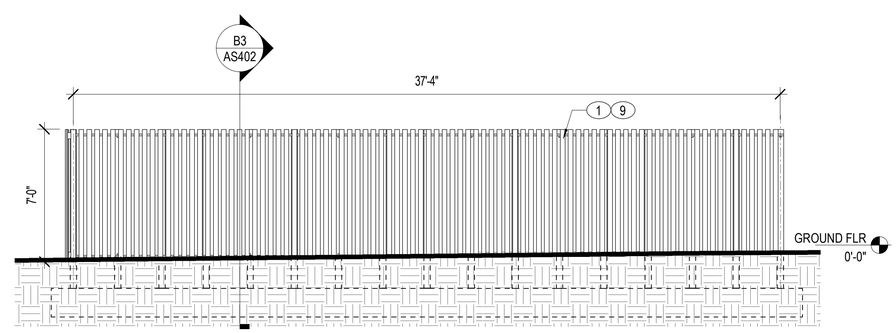

A3 NORTH ELEVATION - SCREEN WALL
1/4" = 1'-0" AS402

NOTES:

SHEET NOTES:

A REFER TO SHEET AS001 FOR ARCHITECTURAL ABBREVIATIONS AND SYMBOLS.
B REFER TO SHEET AS001 FOR EXTERIOR MATERIAL FINISH LEGEND.
C ARCHITECTURAL ELEVATIONS FOR GROUND FLOOR TOP OF SLAB IS DEFINED AS 0'-0". REFER TO CIVIL PLANS CG101-CG104 FOR SLAB ELEVATIONS RELATIVE TO NORTH AMERICAN VERTICAL DATUM (NAVD) SYSTEM.
D REFER TO SHEET CG103 FOR GRADING INFORMATION.
E REFER TO SHEET LP103 FOR LANDSCAPE INFORMATION.
F ARCHITECTURAL EXTERIOR DIMENSIONS ARE TO EXTERIOR FACE OF PRECAST PANEL AND FACE OF METAL STUD, UNO.

KEY NOTES (00)

1 EXTRUDED ALUMINUM SCREEN BARRIER.
2 SCREEN BLADE. MECHANICALLY SECURE SCREEN BLADES TO CONTINUOUS HORIZONTAL SUPPORT.
3 ALUMINUM SCREEN BLADE. MECHANICALLY SECURE SCREEN BLADES TO CONTINUOUS HORIZONTAL SUPPORT.
4 CLIP ANGLE, EXTRUDED ALUMINUM, TYP.
5 CONTINUOUS EXTRUDED ALUMINUM HORIZONTAL SUPPORT. HORIZONTAL SUPPORTS FIXED DIRECTLY TO STEEL VERTICAL SUPPORTS WITH EXTRUDED ALUMINUM CLIP ANGLES.
6 GALVANIZED STEEL TUBE, 4"x4"x1/4", TYP.
7 FORMED TRIM, 0.05" THICK (CUT IN FIELD).
8 REFER TO SHEET CG103 FOR GRADING INFORMATION.
9 SCREEN WALL FINISH: SW 6072 VERSATILE GRAY
10 FIELD VERIFY WITH FINAL LOCATION OF TRANSFORMERS.
11 TRANSFORMER AND CONCRETE PAD. REFER TO ES100A FOR ADDITIONAL INFORMATION.
12 CONTINUOUS CONCRETE FOOTING REINFORCED WITH CONTINUOUS 4 -#4 TOP AND BOTTOM AND #5 TIES AT 1'-0" ON CENTER TOP AND BOTTOM
13 GALVANIZED PLATE 1/2X12X12 WITH 4 - 3/4" DIAMETER GALVANIZED HEADED STUDS (9" GAGE) WITH 9" EMBEDMENT.

MATERIAL NOTES

051200.B03 STEEL TUBE COLUMN

0 1' 2' 4' 6' 8'
1/2" = 1'-0" GRAPHIC SCALE

0 2" 4" 8" 1'
3" = 1'-0" GRAPHIC SCALE

0 6" 1' 2'
1½" = 1'-0" GRAPHIC SCALE

0 4' 8' 16' 24' 32'
1/8" = 1'-0" GRAPHIC SCALE

0 2' 4' 8' 12' 16'
1/4" = 1'-0" GRAPHIC SCALE

NOTE:
IF THIS DRAWING IS LESS THAN 34" X 22"
IT IS A REDUCED SIZE DRAWING

STM	DESCRIPTION	DATE	APPR
1	MOD P00005	05/2023	
2	MOD P00006 AND P00007	10/2025	

NAVFAC

STATE OF FLORIDA
BILLY KEITH HOLLIDAY
AR93022
REGISTERED ARCHITECT
SEAL

BAMFORTH
ARCHITECTURE & DESIGN, PLLC

AE INFO

APPROVED
FOR COMMANDER NAVFAC

ACTIVITY
Approved by J. Scott Roberts,
Asset Management Branch Head &
Supervisory Facility Planner, PWD
Beaufort, SC via email.

SATISFACTORY TO DATE 12/15/2022

DES	EAD	DRW KJF	CHK BKH
PMDM	KTB / RLH		
BRANCH MANAGER	CGM		
CHIEF ENG/ARCH	EJA		
FP ENGINEER	DSN		

DEPARTMENT OF THE NAVY
NAVAL FACILITIES ENGINEERING SYSTEMS COMMAND
NAVAL FACILITIES ENGINEERING SYSTEMS COMMAND – MID-ATLANTIC
DC CODE: NORFOLK, VA
MCAS BEAUFORT
BEAUFORT, SC
P-475 AIRCRAFT MAINTENANCE HANGAR - VOLUME 1 (BASE BID WITH OPTIONS)
PLANS, ELEVATIONS, SECTION, AND DETAILS - EQUIPMENT SCREEN

SCALE: As indicated
EPROJECT NO.: 1363603
CONSTR. CONTR. NO.
NAVFAC DRAWING NO. 12859351
SHEET 179 OF 1412

AS402

DRAWFORM REVISION: 25 AUGUST 2020

Autodesk Docs://20042 MIFA F 502 F39 Maintenance Hangar/20042 F 39 Maint Hangar_Site.rvt
11/3/2025 8:12:13 PM