SITE TELECOMMUNICATIONS LEGEND

SYMBOL	DESCRIPTION
TMH	EXISTING TELECOMMUNICATIONS MANHOLE.
HH	EXISTING TELECOMMUNICATIONS HANDHOLE.
TMH-1	TELECOMMUNICATIONS MANHOLE. SEE A1/TS504 FOR DETAIL. SUBSCRIPT INDICATES MANHOLE NUMBER.
	TELECOMMUNICATIONS HANDHOLE. SUBSCRIPTS INDICATE THE FOLLOWING: THH - TELECOMMUNICATIONS HANDHOLE. SEE A1/TS503 FOR DETAIL, UNLESS OTHERWISE INDICATED. HH - RESTRICTED AREA SECURITY FENCE FIBER HANDHOLE. SEE A4/TS507 FOR DETAIL.
CATV-HH	HANDHOLE. SEE A4/TS501 FOR DETAIL
===EUC:===	EXISTING UNDERGROUND COMMUNICATIONS
=X=DFC:=X=	EXISTING FENCE MOUNTED COMMUNICATIONS TO BE DEMOLISHED
=X=DUC:=X=	EXISTING UNDERGROUND COMMUNICATIONS TO BE DEMOLISHED
===UC===	UNDERGROUND COMMUNICATIONS DUCT BANK
NC	1-WAY DUCT BANK, NON-CONCRETE ENCASED. SEE A1/TS501 FOR DETAIL.
	1-WAY DUCT BANK, CONCRETE ENCASED. SEE C1/TS502 FOR DETAIL. PROVIDE (3) 3-CELL FIBER MESH INNERDUCTS IN EACH CONDUIT USED FOR FIBER OPTIC CABLE PULLS.
	2-WAY DUCT BANK, CONCRETE ENCASED. SEE C3/TS502 FOR DETAIL. PROVIDE (3) 3-CELL FIBER MESH INNERDUCTS IN EACH CONDUIT USED FOR FIBER OPTIC CABLE PULLS.
	4-WAY DUCT BANK, CONCRETE ENCASED. SEE A1/TS502 FOR DETAIL. PROVIDE (3) 3-CELL FIBER MESH INNERDUCTS IN EACH CONDUIT USED FOR FIBER OPTIC CABLE PULLS.
	6-WAY DUCT BANK, CONCRETE ENCASED. SEE A3/TS502 FOR DETAIL. PROVIDE (3) 3-CELL FIBER MESH INNERDUCTS IN EACH CONDUIT USED FOR FIBER OPTIC CABLE PULLS.
X T1 1	DUCT BANK SECTION LOOKING IN THE DIRECTION OF ARROWS OCCUPIED DUCT, UNIDENTIFIED BLANK INDICATES SPARE DUCT NUMERAL INDICATES NEW CABLE DESIGNATION. SEE DUCT BANK CABLE SCHEDULE ON DRAWING TS001. ALPHA NUMERIC INDICATES EXISTING CABLE DESIGNATION. HEAVY LINE INDICATES BOTTOM OF THE DUCT BANK

MISCELLANEOUS

SYMBOL	DESCRIPTION	MOUNTING
00	KEY NOTE SYMBOL.	NA

ABBREVIATIONS

A	AMPERES	JB	JUNCTION BOX
AFC	ABOVE FINISHED CEILING	KAIC	KILO-AMPERES INTERRUPTING CAPACITY
AFF	ABOVE FINISHED FLOOR		
AFG	ABOVE FINISHED GRADE	KV	KILO-VOLTS
AHU	AIR HANDLING UNIT	KVA	KILO-VOLTS-AMPERES
AIC	AMPERES INTERRUPTING CAPACITY	KVAR	KILO-VOLTS-AMPERES REACTIVE
ATS	AUTOMATIC TRANSFER SWITCH	KW	KILO-WATTS
AWG	AMERICAN WIRE GAUGE	KWH	KILO-WATT-HOURS
BFC	BELOW FINISHED CEILING	LAN	LOCAL AREA NETWORK
BFG	BELOW FINISHED GRADE	LED	LIGHT-EMITTING DIODE
C	CONDUIT	LTG	LIGHTING
CAB	CABINET	m	METER
CATV	CABLE TELEVISION	mm	MILLIMETER
CCTV	CLOSED CIRCUIT TELEVISION	MAX	MAXIMUM
CH	CHILLER	MCB	MAIN CIRCUIT BREAKER
CKT	CIRCUIT	MCC	MOTOR CONTROL CENTER
CL	CENTERLINE	MCP	MOTOR CIRCUIT PROTECTOR
CLG	CEILING	MFR	MANUFACTURER
CT's	CURRENT TRANSFORMERS	MIN	MINIMUM
CU	COPPER	MISC	MISCELLANEOUS
DISC	DISCONNECT(ING)	MTR	MOTOR
DWG	DRAWING(S)	MTD	MOUNTED
EA	EACH	MTG	MOUNTING
EF	EXHAUST FAN	MTS	MANUAL TRANSFER SWITCH
EMT	ELECTRICAL METALLIC TUBING	N.C.	NORMALLY CLOSED
EQUIP	EQUIPMENT	N.O.	NORMALLY OPEN
EUH	ELECTRIC UNIT HEATER	NA	NOT APPLICABLE
EWC	ELECTRIC WATER COOLER	NC	NURSE CALL
EWH	ELECTRIC WATER HEATER	NEC	NATIONAL ELECTRICAL CODE
EXH	EXHAUST	NFPA	NATIONAL FIRE PROTECTION ASSOCIATION
EXIST	EXISTING		
FA	FIRE ALARM	PNL	PANEL
FLUOR	FLUORESCENT	PVC	POLYVINYL CHLORIDE
G	GROUND	REC	RECEPTACLE
GEN	ENGINE GENERATOR SET	RGS	RIGID GALVANIZED STEEL
GFI	GROUND FAULT INTERRUPTER	SF	SUPPLY FAN
GFCI	GROUND FAULT CIRCUIT INTERRUPTER	TEL	TELEPHONE
GFGI	GOVERNMENT FURNISHED, GOVERNMENT INSTALLED	TYP	TYPICAL
		UH	UNIT HEATER
GFP	GROUND FAULT PROTECTION	UON	UNLESS OTHERWISE NOTED
GND	GROUND	V	VOLTS
HGT	HEIGHT	VA	VOLT-AMPERES
HOA	HAND-OFF-AUTOMATIC	VAV	VARIABLE AIR VOLUME UNIT
HP	HORSEPOWER	W	WATTS
HVAC	HEATING/VENTILATING / AIR CONDITIONING	WAP	WIRELESS ACCESS POINT
		WP	WEATHER PROOF
HV	HIGH VOLTAGE	XFMR	TRANSFORMER
INC	INCANDESCENT		

DUCT BANK CABLE SCHEDULE

CABLE ID	DESCRIPTION
1	6 STRAND SINGLE MODE FIBER OPTIC CABLE
2	72 STRAND SINGLE MODE FIBER OPTIC CABLE (4-144 STRAND SINGLE MODE FIBER OPTIC CABLE UNDER BUILDING 3060 INTERCONNECTION OPTION)
3	200 PAIR COPPER CABLE (2100 PAIR COPPER CABLE UNDER BUILDING 3060 INTERCONNECTION OPTION)
4	96 STRAND SINGLE MODE FIBER OPTIC CABLE
5	192 STRAND SINGLE MODE FIBER OPTIC CABLE
6	288 STRAND SINGLE MODE FIBER OPTIC CABLE
7	8 STRAND SINGLE MODE FIBER OPTIC CABLE
8	25 PAIR COPPER CABLE
9	24 STRAND SINGLE MODE FIBER OPTIC CABLE
10	72 STRAND SINGLE MODE FIBER OPTIC CABLE
11	200 PAIR COPPER CABLE
12	6 STRAND EPMS SINGLE MODE FIBER OPTIC CABLE (BETWEEN PARKING GARAGE AND HANGAR). 6 STRAND AMI SINGLE MODE FIBER OPTIC CABLE (BETWEEN PARKING GARAGE AND HANGAR).
13	6 STRAND EPMS SINGLE MODE FIBER OPTIC CABLE (BETWEEN OSF AND HANGAR). 6 STRAND AMI SINGLE MODE FIBER OPTIC CABLE (BETWEEN OSF AND HANGAR)
X	EXISTING OCCUPIED DUCT

NOTE:
IF THIS DRAWING IS LESS THAN 34" X 22"
IT IS A REDUCED SIZE DRAWING

NO	DESCRIPTION	DATE	APPR
1	MOD P00005	05/2023	
2	MOD P00006 AND MOD P00007	10/2025	

NAVFAC

REGISTERED COMMUNICATIONS DISTRIBUTION DESIGNER
Bicsi
DONALD R SELLERS
REG. NO. 110645
EXPIRES 12-31-2028
RCDD

BAMFORTH ENGINEERS CONSTRUCTORS

APPROVED
FOR COMMANDER NAVFAC
ACTIVITY
Approved by J. Scott Roberts,
Asset Management Branch Head &
Supervisory Facility Planner, PWD
Beaufort, SC via email.
SATISFACTORY TO DATE 12/15/2022

DES	DRS	DRW	MES	CHK	KLM
PM/DM					KTB / RLH
BRANCH MANAGER					JAS
CHIEF ENG/ARCH					EJA
FP ENGINEER					DSN

DEPARTMENT OF THE NAVY
NAVAL FACILITIES ENGINEERING SYSTEMS COMMAND
DC CORE
MCAS BEAUFORT

NAVAL FACILITIES ENGINEERING SYSTEMS COMMAND – MID-ATLANTIC
NORFOLK, VA

P-475 AIRCRAFT MAINTENANCE HANGAR - VOLUME 1 (BASE BID WITH OPTIONS)

BEAUFORT, SC

HANGAR - TELECOMMUNICATIONS SITE LEGEND AND ABBREVIATIONS

SCALE:	As Indicated
EPROJECT NO.:	1363603
CONSTR. CONTR. NO.	
NAVFAC DRAWING NO.	12859390
SHEET	218 OF 1412

TS001

DRAWFORM REVISION: 25 AUGUST 2020

Autodesk Docs://22043_MFA1 500 736 Maintenance Hangar/22043_F35 mixed Hangar_LV-R17_2024.rvt
11/5/2025 4:27:28 PM

NOTES:

SHEET NOTES:

A. THIS PLAN IS SHOWN FOR REFERENCE ONLY.

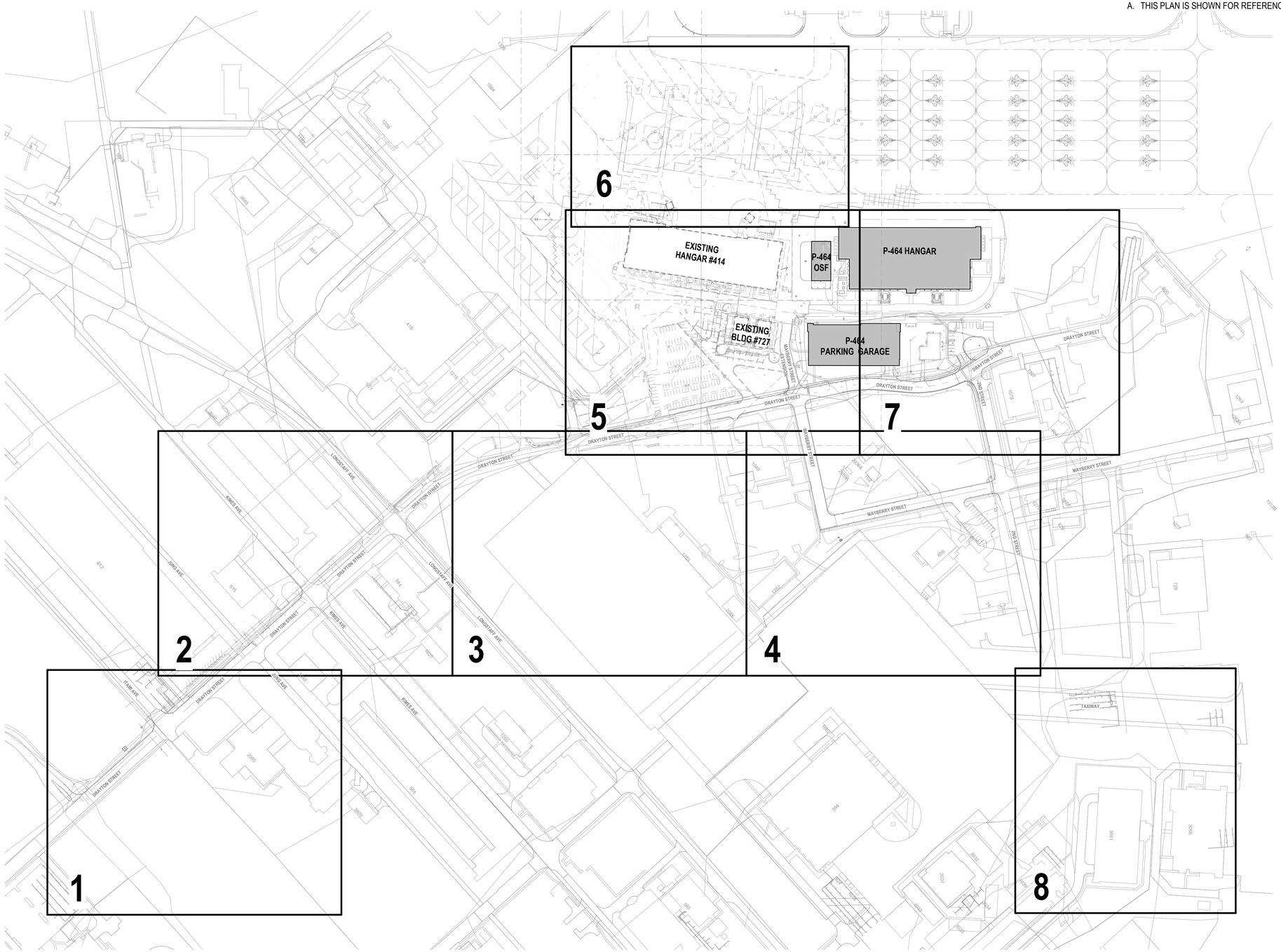

PLAN NORTH

0 80' 160' 320' 480' 640'

1" = 160' GRAPHIC SCALE

A1 DEMOLITION REFERENCE PLAN

1" = 160'-0"

NOTE:
IF THIS DRAWING IS LESS THAN 34" X 22"
IT IS A REDUCED SIZE DRAWING

SYM	DESCRIPTION	DATE	APPR
1	MOD P00005	05/2023	
2	MOD P00006 AND MOD P00007	10/2025	

NAVFAC

REGISTERED COMMUNICATIONS DISTRIBUTION DESIGNER
Bicsi
DONALD R. SELLERS
REG. NO. 110645
EXPIRES 12-31-2028
RCDD
SEAL

BAMFORTH
ENGINEERS + SURVEYORS

AE INFO

APPROVED

FOR COMMANDER NAVFAC 11/21/2025

ACTIVITY
Approved by J. Scott Roberts, Asset Management Branch Head & Supervisory Facility Planner, PWD Beaufort, SC via email.

SATISFACTORY TO DATE	12/15/2022
DES DRS	DRW MES CHK KLM
PM/DM	KTB / RLH
BRANCH MANAGER	JAS
CHIEF ENG/ARCH	EJA
FP ENGINEER	DSN

DEPARTMENT OF THE NAVY
NAVAL FACILITIES ENGINEERING SYSTEMS COMMAND
NAVAL FACILITIES ENGINEERING SYSTEMS COMMAND ~ MID-ATLANTIC
NORFOLK, VA
DC CORE
MCAS BEAUFORT
BEAUFORT, SC
P-475 AIRCRAFT MAINTENANCE HANGAR - VOLUME 1 (BASE BID WITH OPTIONS)
HANGAR - TELECOMMUNICATIONS OVERALL SITE DEMOLITION REFERENCE PLAN

SCALE:	1" = 160'-0"
EPROJECT NO.:	1363603
CONSTR. CONTR. NO.	
NAVFAC DRAWING NO.	12859391
SHEET	219 OF 1412

TD100

DRAWFORM REVISION: 25 AUGUST 2020

Autodesk Docs://20042 VMFAT 502 F35 Maintenance Hangar/20042 F35 maint Hangar LV-RV72024.rvt
11/5/2024 4:27:38 PM

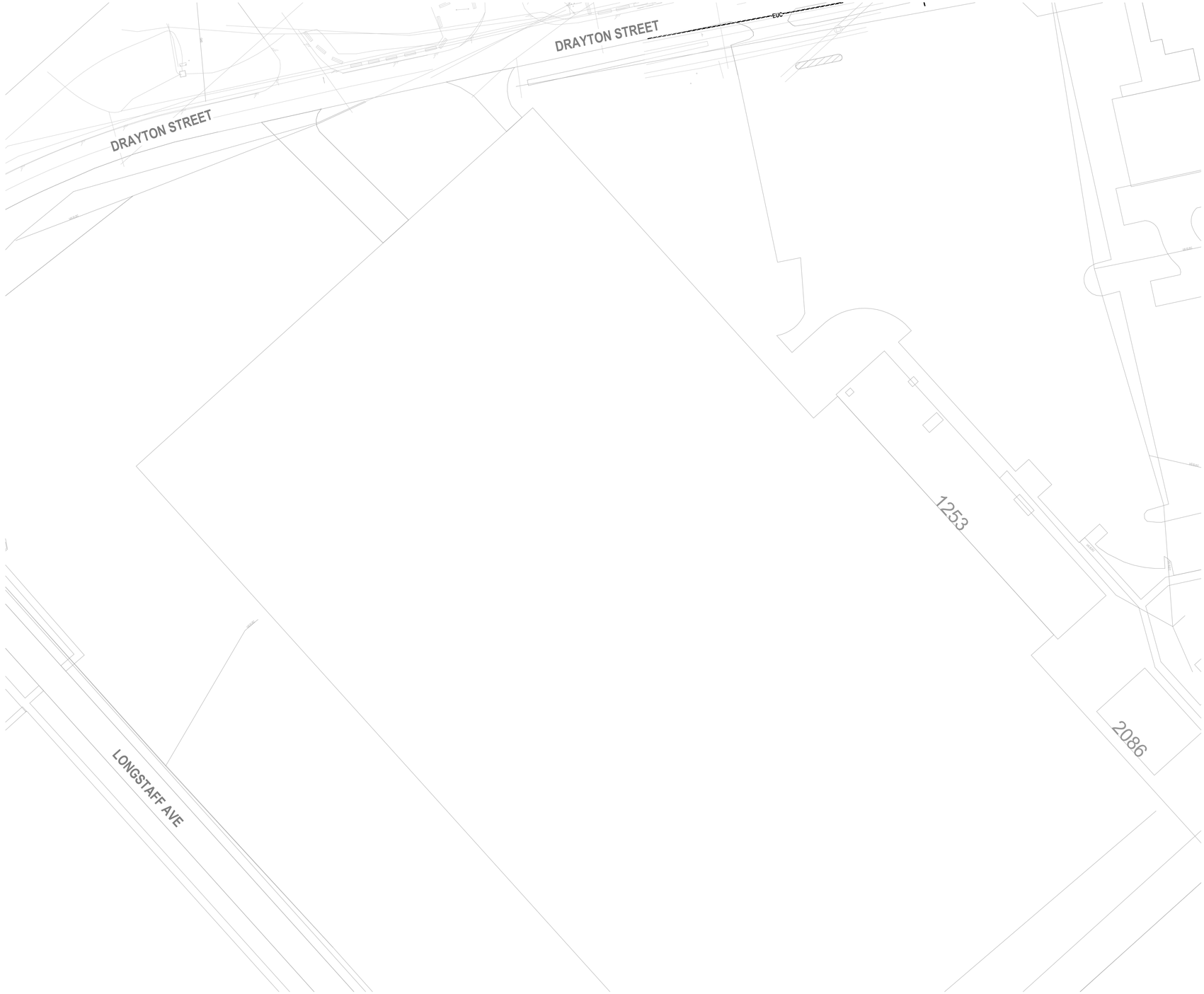

NOTES:

SHEET NOTES:

A. THIS DRAWING SHOWN FOR REFERENCE ONLY.

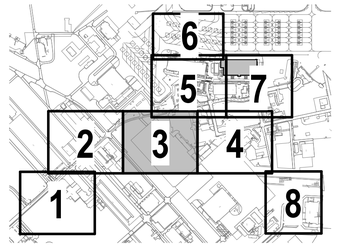

PLAN NORTH

N

0 20' 40' 80' 120' 160'

1" = 40' GRAPHIC SCALE

NOTE:
IF THIS DRAWING IS LESS THAN 34" X 22"
IT IS A REDUCED SIZE DRAWING

A1 TELECOMMUNICATIONS SITE DEMOLITION PLAN - SECTOR 3

1" = 40'-0"

STM	#	DESCRIPTION	DATE	APPR
	1	MOD P00005	05/2023	
	2	MOD P00006 AND MOD P00007	10/2025	

REGISTERED COMMUNICATIONS DISTRIBUTION DESIGNER
Bicsi
DONALD K SELLERS
REG. NO. 110645
EXPIRES 12-31-2028
RCDD
SEAL

BAMFORTH ENGINEERS CONTRACTORS
AE INFO

APPROVED
FOR COMMANDER NAVFAC 11/21/2025

ACTIVITY
Approved by J. Scott Roberts,
Asset Management Branch Head &
Supervisory Facility Planner, PWD
Beaufort, SC via email.

SATISFACTORY TO DATE	12/15/2022
DES DRS / DRW MES / CHK	KLM
PM/DM	KTB / RLH
BRANCH MANAGER	JAS
CHIEF ENG/ARCH	EJA
FP ENGINEER	DSN

DEPARTMENT OF THE NAVY
NAVAL FACILITIES ENGINEERING SYSTEMS COMMAND
DC CORE

NAVAL FACILITIES ENGINEERING SYSTEMS COMMAND – MID-ATLANTIC
NORFOLK, VA

MCAS BEAUFORT
BEAUFORT, SC

P-475 AIRCRAFT MAINTENANCE HANGAR - VOLUME 1 (BASE BID WITH OPTIONS)

HANGAR - TELECOMMUNICATIONS SITE DEMOLITION PLAN SECTOR 3

SCALE:	As indicated
EPROJECT NO.:	1363603
CONSTR. CONTR. NO.	
NAVFAC DRAWING NO.	12859392
SHEET	220 OF 1412

TD103

DRAWFORM REVISION: 25 AUGUST 2020

Autodesk Docs://2040_NAVFAC SIGC FSI- Maintenance Hangar/2040C FSI- Hangar Hangar_LV-RVT2024.rvt
11/5/2025 4:27:56 PM

NOTES:

SHEET NOTES:

A. SEE DRAWING TD601 FOR CABLING DEMOLITION WORK RELATED TO THIS DRAWING.

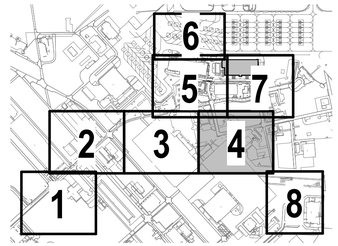

PLAN NORTH

N

0 20' 40' 80' 120' 160'

1" = 40' GRAPHIC SCALE

NOTE:
IF THIS DRAWING IS LESS THAN 34" X 22"
IT IS A REDUCED SIZE DRAWING

A1 TELECOMMUNICATIONS SITE DEMOLITION PLAN - SECTOR 4

1" = 40'-0"

SYM	DESCRIPTION	DATE	APPR
1	MOD P00005	05/2023	
2	MOD P00006 AND MOD P00007	10/2025	

NAVFAC

REGISTERED COMMUNICATIONS DISTRIBUTION DESIGNER
Bicsi
DONALD R SELLERS
REG. NO. 110645
EXPIRES 12-31-2028
RCDD
SEAL

BAMFORTH
ENGINEERS + SURVEYORS

A/E INFO

APPROVED

FOR COMMANDER NAVFAC 11/21/2025

ACTIVITY
Approved by J. Scott Roberts, Asset Management Branch Head & Supervisory Facility Planner, PWD Beaufort, SC via email.

SATISFACTORY TO DATE	12/15/2022
DES DRS / DRW MES / CHK KLM	
PM/DM	KTB / RLH
BRANCH MANAGER	JAS
CHIEF ENG/ARCH	EJA
FP ENGINEER	DSN

DEPARTMENT OF THE NAVY
NAVAL FACILITIES ENGINEERING SYSTEMS COMMAND
NAVAL FACILITIES ENGINEERING SYSTEMS COMMAND ~ MID-ATLANTIC
NORFOLK, VA
DC CORE
MCAS BEAUFORT
BEAUFORT, SC
P-475 AIRCRAFT MAINTENANCE HANGAR - VOLUME 1 (BASE BID WITH OPTIONS)
HANGAR - TELECOMMUNICATIONS SITE DEMOLITION PLAN SECTOR 4

SCALE:	As indicated
EPROJECT NO.:	1363603
CONSTR. CONTR. NO.	
NAVFAC DRAWING NO.	12859393
SHEET	221 OF 1412

TD104

DRAWFORM REVISION: 25 AUGUST 2020

Autodesk Docs://2024 VMFAT 502 F35 Maintenance Hangar/2024 F35 maint Hangar LV-RV7/2024.rvt
11/5/2025 4:28:09 PM

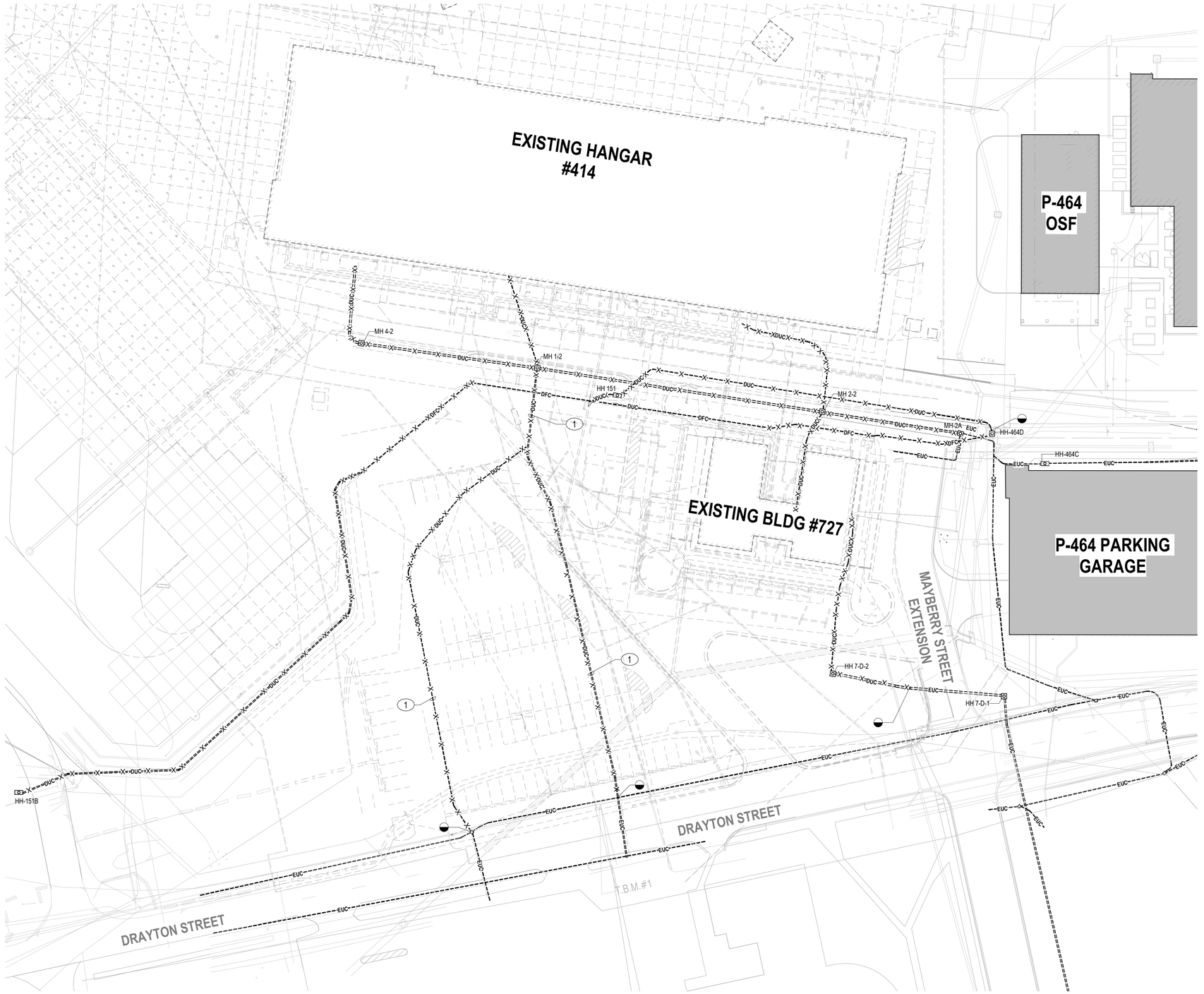

A1 TELECOMMUNICATIONS SITE DEMOLITION PLAN - SECTOR 5

1" = 40'-0"

NOTES:

SHEET NOTES:

A. SEE DRAWING TD601 FOR CABLING DEMOLITION WORK RELATED TO THIS DRAWING.

KEY NOTES (00)

1 REMOVE ABANDONED DIRECT BURIED CABLES.

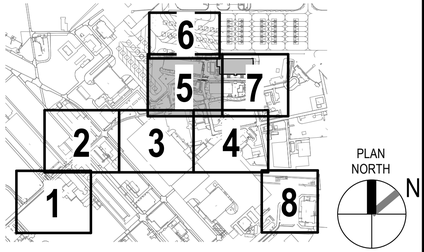

0 20' 40' 80' 120' 160'

1" = 40' GRAPHIC SCALE

NOTE:
IF THIS DRAWING IS LESS THAN 34" X 22"
IT IS A REDUCED SIZE DRAWING

SYM	DESCRIPTION	DATE	APPR
1	MOD P00005	05/2023	
2	MOD P00006 AND MOD P00007	10/2025	

NAVFAC

REGISTERED COMMUNICATIONS DISTRIBUTION DESIGNER
Bicsi
DONALD R SELLERS
REG. NO. 110645
EXPIRES 12-31-2028
RCDD
SEAL

BAMFORTH
ENGINEERS + SURVEYORS

AE INFO

APPROVED

FOR COMMANDER NAVFAC 11/21/2025

ACTIVITY
Approved by J. Scott Roberts, Asset Management Branch Head & Supervisory Facility Planner, PWD Beaufort, SC via email.

SATISFACTORY TO DATE	12/15/2022
DES DRS / DRW MES / CHK KLM	
PM/DM	KTB / RLH
BRANCH MANAGER	JAS
CHIEF ENG/ARCH	EJA
FP ENGINEER	DSN

DEPARTMENT OF THE NAVY
NAVAL FACILITIES ENGINEERING SYSTEMS COMMAND ~ MID-ATLANTIC
NORFOLK, VA
DC CORE
MCAS BEAUFORT
BEAUFORT, SC

P-475 AIRCRAFT MAINTENANCE HANGAR - VOLUME 1 (BASE BID WITH OPTIONS)

HANGAR - TELECOMMUNICATIONS SITE DEMOLITION PLAN SECTOR 5

SCALE:	As indicated
EPROJECT NO.:	1363603
CONSTR. CONTR. NO.	
NAVFAC DRAWING NO.	12859394
SHEET	222 OF 1412

TD105

DRAWFORM REVISION: 25 AUGUST 2020

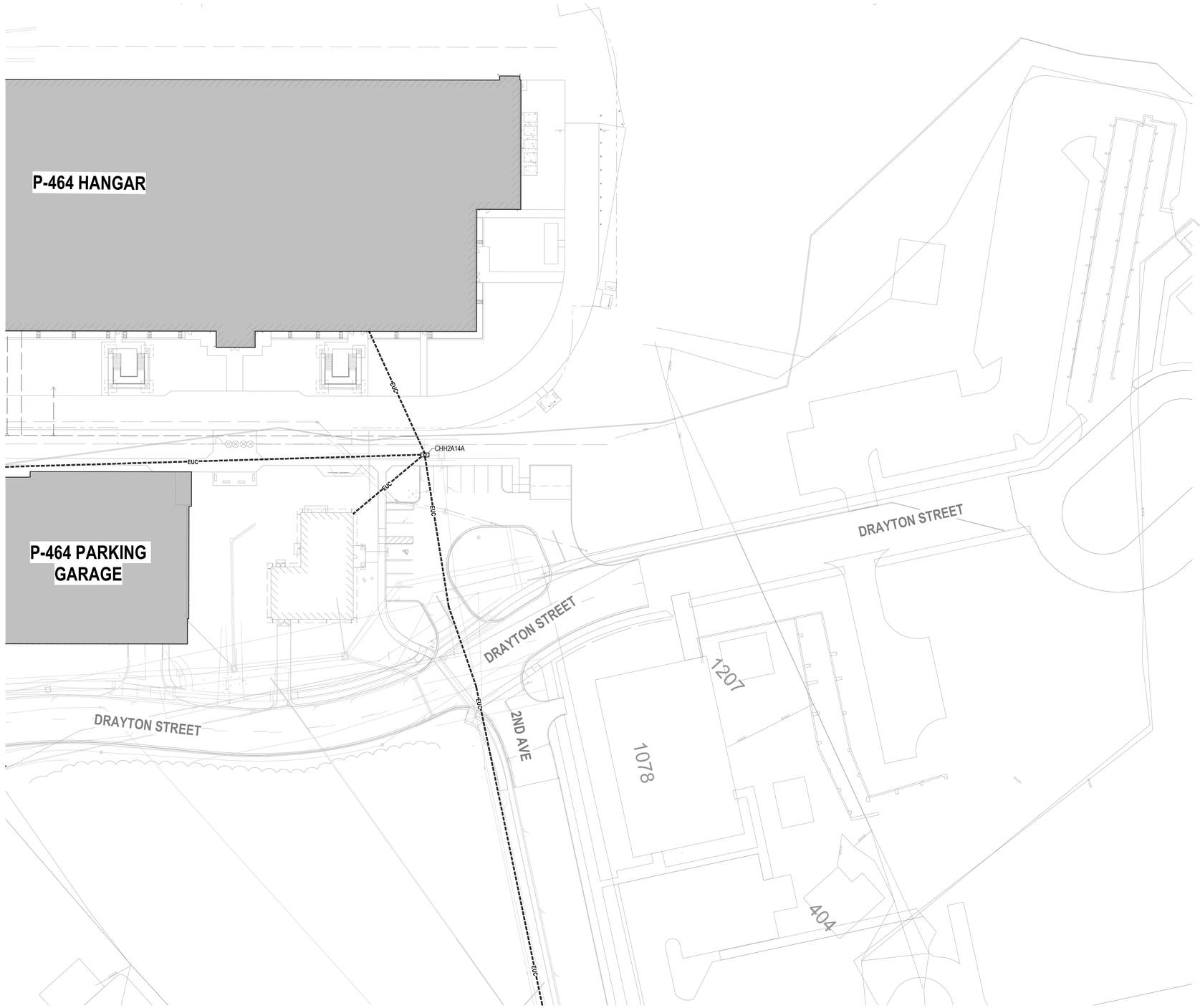

A1 TELECOMMUNICATIONS SITE DEMOLITION PLAN - SECTOR 7

1" = 40'-0"

NOTES:

SHEET NOTES:

A. SEE DRAWING TD601 FOR CABLING DEMOLITION WORK RELATED TO THIS DRAWING.

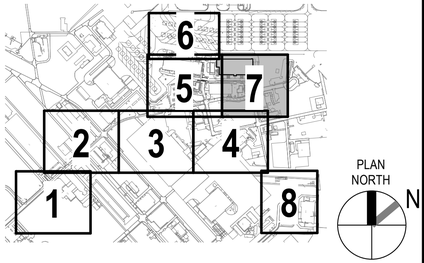

0 20' 40' 80' 120' 160'

1" = 40' GRAPHIC SCALE

NOTE:
IF THIS DRAWING IS LESS THAN 34" X 22"
IT IS A REDUCED SIZE DRAWING

SYM	DESCRIPTION	DATE	APPR
1	MOD P00005	05/2023	
2	MOD P00006 AND MOD P00007	10/2025	

NAVFAC

REGISTERED COMMUNICATIONS DISTRIBUTION DESIGNER
Bicsi
DONALD R. SELLERS
REG. NO. 110645
EXPIRES 12-31-2028
RCDD
SEAL

BAMFORTH
ENGINEERS + SURVEYORS

AE INFO

APPROVED

FOR COMMANDER NAVFAC 11/21/2025

ACTIVITY
Approved by J. Scott Roberts,
Asset Management Branch Head &
Supervisory Facility Planner, PWD
Beaufort, SC via email.

SATISFACTORY TO DATE					12/15/2022
DES	DRS	DRW	MES	CHK	KLM
PM/DM					KTB / RLH
BRANCH MANAGER					JAS
CHIEF ENG/ARCH					EJA
FP ENGINEER					DSN

DEPARTMENT OF THE NAVY
NAVAL FACILITIES ENGINEERING SYSTEMS COMMAND
DC CORE
NAVAL FACILITIES ENGINEERING SYSTEMS COMMAND ~ MID-ATLANTIC
NORFOLK, VA
MCAS BEAUFORT
BEAUFORT, SC
P-475 AIRCRAFT MAINTENANCE HANGAR - VOLUME 1 (BASE BID WITH OPTIONS)
HANGAR - TELECOMMUNICATIONS SITE DEMOLITION PLAN SECTOR 7

SCALE:	As indicated
EPROJECT NO.:	1363603
CONSTR. CONTR. NO.	
NAVFAC DRAWING NO.	12859395
SHEET	223 OF 1412

TD107

DRAWFORM REVISION: 25 AUGUST 2020

Autodesk Docs://20042 VMFAT 502 F35 Maintenance Hangar/20042 F35 maint Hangar LV-RV7/2024.rvt
11/5/2024 4:28:48 PM

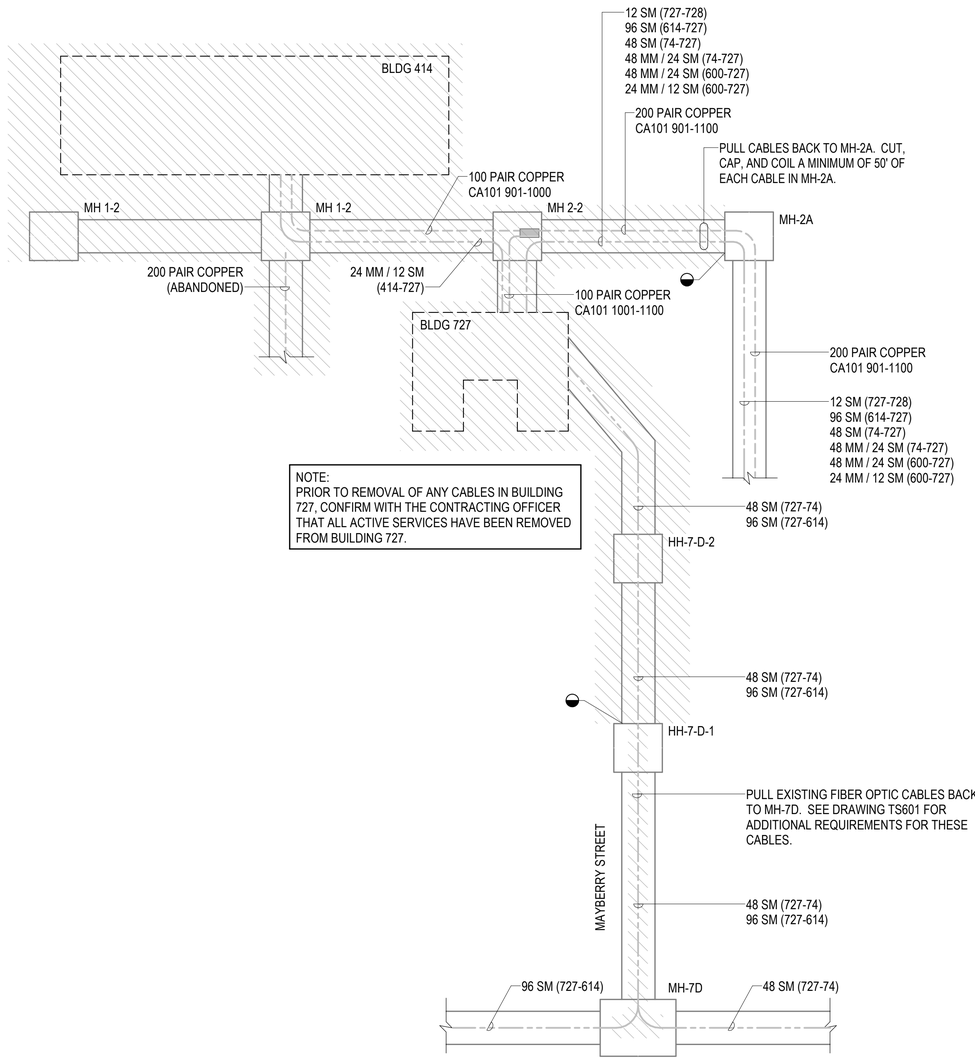

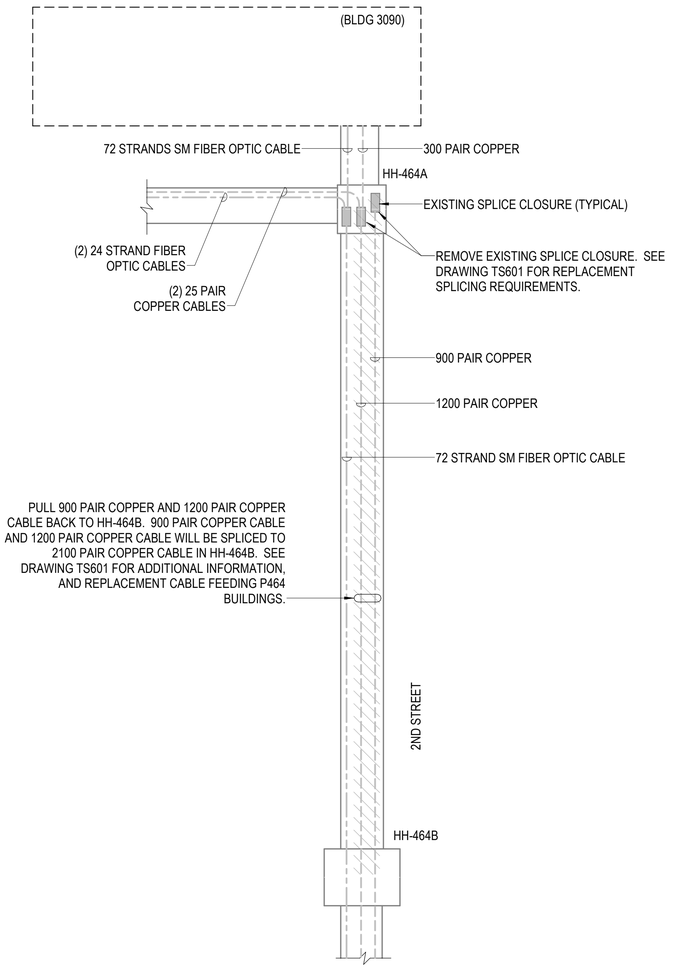

NOTES:

SHEET NOTES:

A. PROVIDE 30 DAY PRIOR NOTICE TO THE CONTRACTING OFFICER FOR ANY SCHEDULED SERVICE OUTAGES RELATED TO REMOVAL OF EXISTING CABLES.

NOTE:
IF THIS DRAWING IS LESS THAN 34" X 22"
IT IS A REDUCED SIZE DRAWING

STM	DESCRIPTION	DATE	APPR
1	MOD P00005	05/2023	
2	MOD P00006 AND MOD P00007	10/2025	

NAVFAC

REGISTERED COMMUNICATIONS DISTRIBUTION DESIGNER
Bicsi
DONALD R. SELLERS
REG. NO. 110645
EXPIRES 12-31-2028
RCDD

BAMFORTH ENGINEERS + CONSULTANTS

AE INFO

APPROVED
FOR COMMANDER NAVFAC

ACTIVITY
Approved by J. Scott Roberts,
Asset Management Branch Head &
Supervisory Facility Planner, PWD
Beaufort, SC via email.

SATISFACTORY TO DATE	12/15/2022
DES DRS / DRW MES / CHK KLM	
PMDM	KTB / RLH
BRANCH MANAGER	JAS
CHIEF ENG/ARCH	EJA
FP ENGINEER	DSN

DEPARTMENT OF THE NAVY
NAVAL FACILITIES ENGINEERING SYSTEMS COMMAND
DO CORE
MCAS BEAUFORT

NAVAL FACILITIES ENGINEERING SYSTEMS COMMAND – MID-ATLANTIC
NORFOLK, VA

BEAUFORT, SC

P-475 AIRCRAFT MAINTENANCE HANGAR - VOLUME 1 (BASE BID WITH OPTIONS)

HANGAR - TELECOMMUNICATIONS OSP RISER DIAGRAM - DEMOLITION

SCALE:	SCALE: NTS
EPROJECT NO.:	1363603
CONSTR. CONTR. NO.	
NAVFAC DRAWING NO.	12859396
SHEET	224 OF 1412

TD601

DRAWFORM REVISION: 25 AUGUST 2020

Autodesk Docs://20042 VMFAT 502 F35 Maintenance Hangar/20042 F35 maint hangar LV-R-T2024.rvt
11/5/2025 4:29:02 PM

NOTES:

SHEET NOTES:

A. THIS PLAN IS SHOWN FOR REFERENCE ONLY.

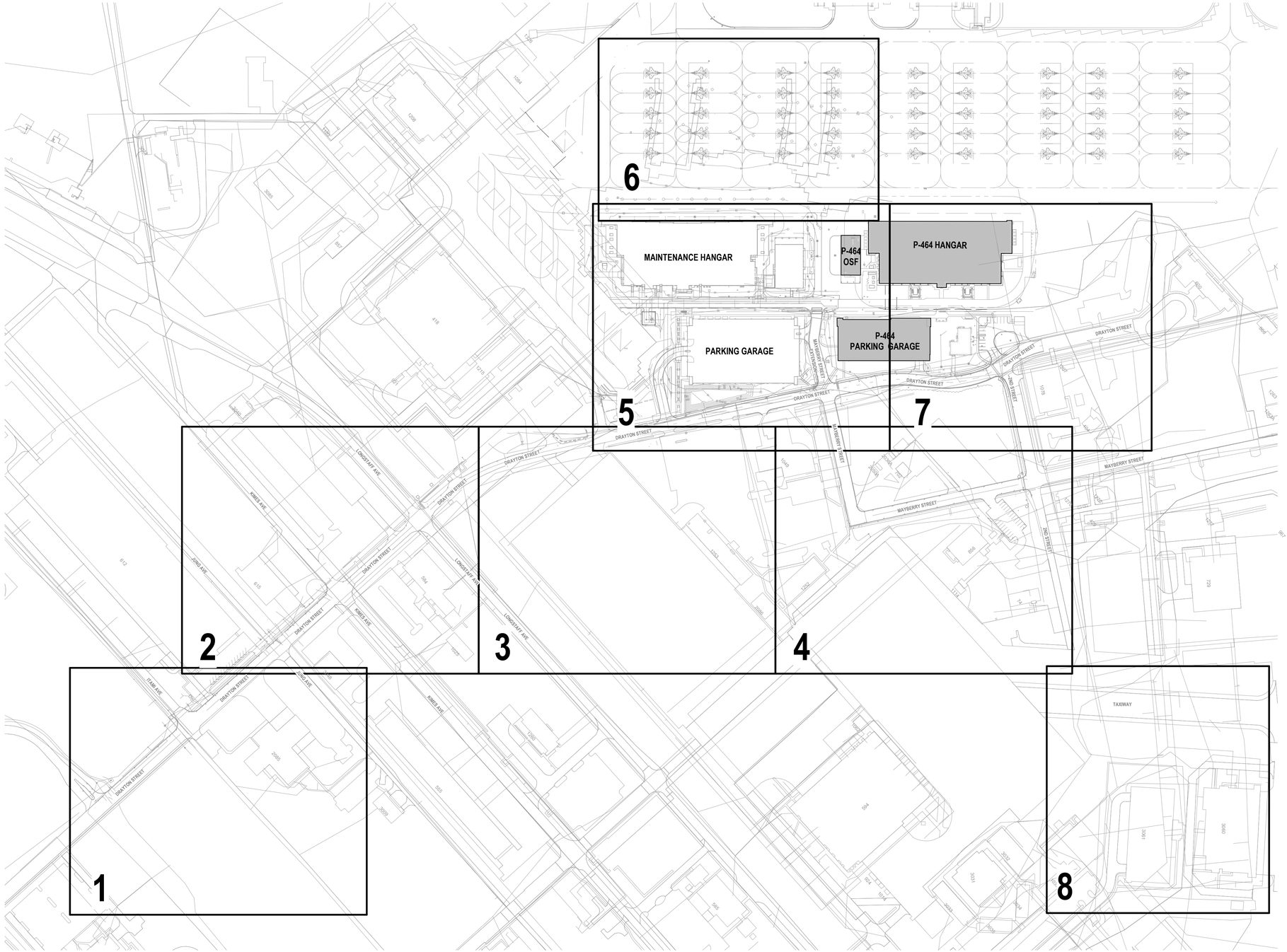

PLAN NORTH N

0 80' 160' 320' 480' 640'

1" = 160' GRAPHIC SCALE

A1 SITE REFERENCE PLAN

1" = 160'-0"

NOTE:
IF THIS DRAWING IS LESS THAN 34" X 22"
IT IS A REDUCED SIZE DRAWING

NO.	DESCRIPTION	DATE	APPR
1	MOD P00005	05/2023	
2	MOD P00006 AND MOD P00007	10/2025	

NAVFAC

REGISTERED COMMUNICATIONS DISTRIBUTION DESIGNER
Bicsi
DONALD SELLERS
REG. NO. 110645
EXPIRES 12-31-2028
RCDD
SEAL

BAMFORTH ENGINEERS CONTRACTORS
A/E INFO

APPROVED
FOR COMMANDER NAVFAC 11/21/2025
ACTIVITY: Approved by J. Scott Roberts, Asset Management Branch Head & Supervisory Facility Planner, PWD Beaufort, SC via email.

SATISFACTORY TO DATE 12/15/2022

DES	DRS	DRW	MES	CHK	KLM
PM/DM					KTB / RLH
BRANCH MANAGER					JAS
CHIEF ENG/ARCH					EJA
FP ENGINEER					DSN

DEPARTMENT OF THE NAVY
NAVAL FACILITIES ENGINEERING SYSTEMS COMMAND ~ MID-ATLANTIC
DC CORE: NORFOLK, VA

MCAS BEAUFORT
BEAUFORT, SC

P-475 AIRCRAFT MAINTENANCE HANGAR - VOLUME 1 (BASE BID WITH OPTIONS)

HANGAR - TELECOMMUNICATIONS OVERALL SITE REFERENCE PLAN

SCALE: 1" = 160'-0"
EPROJECT NO.: 1363603
CONSTR. CONTR. NO.
NAVFAC DRAWING NO.: 12859397
SHEET 225 OF 1412

TS100

DRAWFORM REVISION: 25 AUGUST 2020

Autodesk Docs://2024 1 MEA1 302 F36 Maintenance Hangar/2024 F36 maint Hangar LV.RVT/2024.rvt
11/9/2023 4:25:14 PM

A1 TELECOMMUNICATIONS SITE PLAN - SECTOR 1

1" = 40'-0"

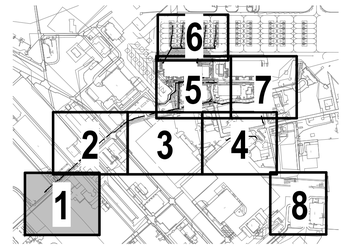

PLAN NORTH

N

0 20' 40' 80' 120' 160'

1" = 40' GRAPHIC SCALE

NOTE:
IF THIS DRAWING IS LESS THAN 34" X 22"
IT IS A REDUCED SIZE DRAWING

SYM	DESCRIPTION	DATE	APPR
1	MOD P00005	05/2023	
2	MOD P00006 AND MOD P00007	10/2025	

NAVFAC

REGISTERED COMMUNICATIONS DISTRIBUTION DESIGNER
Bicsi
DONALD R SELLERS
REG. NO. 110645
EXPIRES 12-31-2028
RCDD
SEAL

BAMFORTH
ENGINEERS + SURVEYORS

A/E INFO

APPROVED

FOR COMMANDER NAVFAC 11/21/2025

ACTIVITY
Approved by J. Scott Roberts,
Asset Management Branch Head &
Supervisory Facility Planner, PWD
Beaufort, SC via email.

SATISFACTORY TO DATE	12/15/2022
DES DRS	DRW MES CHK KLM
PM/DM	KTB / RLH
BRANCH MANAGER	JAS
CHIEF ENG/ARCH	EJA
FP ENGINEER	DSN

DEPARTMENT OF THE NAVY
NAVAL FACILITIES ENGINEERING SYSTEMS COMMAND
NAVAL FACILITIES ENGINEERING SYSTEMS COMMAND ~ MID-ATLANTIC
NORFOLK, VA
DC CORE
MCAS BEAUFORT
BEAUFORT, SC
P-475 AIRCRAFT MAINTENANCE HANGAR -
VOLUME 1 (BASE BID WITH OPTIONS)
HANGAR - TELECOMMUNICATIONS SITE PLAN SECTOR 1

SCALE:	As indicated
EPROJECT NO.:	1363603
CONSTR. CONTR. NO.	
NAVFAC DRAWING NO.	12859398
SHEET	226 OF 1412

TS101

DRAWFORM REVISION: 25 AUGUST 2020

Autodesk Docs://20042 VMFA1 502 F35 Maintenance Hangar/20042 F35 maint Hangar LV-RV7/2024.rvt
11/5/2025 4:29:33 PM

A1 TELECOMMUNICATIONS SITE PLAN - SECTOR 2

1" = 40'-0"

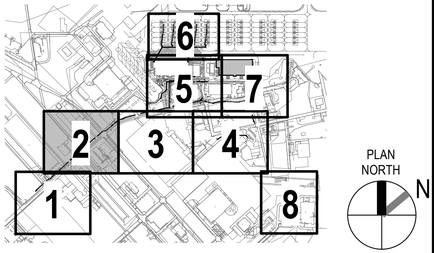

0 20' 40' 80' 120' 160'

1" = 40' GRAPHIC SCALE

NOTE:
IF THIS DRAWING IS LESS THAN 34" X 22"
IT IS A REDUCED SIZE DRAWING

SYM	DESCRIPTION	DATE	APPR
1	MOD P00005	05/2023	
2	MOD P00006 AND MOD P00007	10/2025	

NAVFAC

REGISTERED COMMUNICATIONS DISTRIBUTION DESIGNER
Bicsi
DONALD R SELLERS
REG. NO. 110645
EXPIRES 12-31-2028
RCDD
SEAL

BAMFORTH
ENGINEERS + SURVEYORS
A/E INFO

APPROVED
FOR COMMANDER NAVFAC 11/21/2025

ACTIVITY
Approved by J. Scott Roberts,
Asset Management Branch Head &
Supervisory Facility Planner, PWD
Beaufort, SC via email.

SATISFACTORY TO DATE	12/15/2022
DES DRS	DRW MES CHK KLM
PM/DM	KTB / RLH
BRANCH MANAGER	JAS
CHIEF ENG/ARCH	EJA
FP ENGINEER	DSN

DEPARTMENT OF THE NAVY
NAVAL FACILITIES ENGINEERING SYSTEMS COMMAND
DC CORE
NAVAL FACILITIES ENGINEERING SYSTEMS COMMAND ~ MID-ATLANTIC
NORFOLK, VA

MCAS BEAUFORT
BEAUFORT, SC
P-475 AIRCRAFT MAINTENANCE HANGAR -
VOLUME 1 (BASE BID WITH OPTIONS)

HANGAR - TELECOMMUNICATIONS SITE PLAN SECTOR 2

SCALE:	As indicated
EPROJECT NO.:	1363603
CONSTR. CONTR. NO.	
NAVFAC DRAWING NO.	12859399
SHEET	227 OF 1412

TS102

DRAWFORM REVISION: 25 AUGUST 2020

Autodesk Docs://2024 1/MFAT 502 F35 Maintenance Hangar/20042 F35 maint Hangar-LV-RVT2024.rvt
11/5/2025 4:29:53 PM

A1 TELECOMMUNICATIONS SITE PLAN - SECTOR 3

1" = 40'-0"

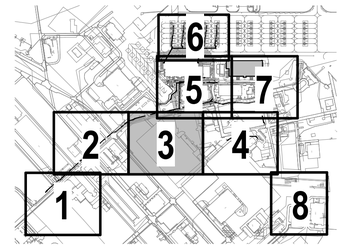

PLAN NORTH

N

0 20' 40' 80' 120' 160'

1" = 40' GRAPHIC SCALE

NOTE:
IF THIS DRAWING IS LESS THAN 34" X 22"
IT IS A REDUCED SIZE DRAWING

SYM	DESCRIPTION	DATE	APPR
1	MOD P00005	05/2023	
2	MOD P00006 AND MOD P00007	10/2025	

NAVFAC

REGISTERED COMMUNICATIONS DISTRIBUTION DESIGNER
Bicsi
DONALD R SELLERS
REG. NO. 110645
EXPIRES 12-31-2028
RCDD
SEAL

BAMFORTH
ENGINEERS + SURVEYORS

A/E INFO

APPROVED

FOR COMMANDER NAVFAC 11/21/2025

ACTIVITY
Approved by J. Scott Roberts,
Asset Management Branch Head &
Supervisory Facility Planner, PWD
Beaufort, SC via email.

SATISFACTORY TO DATE					12/15/2022
DES	DRS	DRW	MES	CHK	KLM
PM/DM					KTB / RLH
BRANCH MANAGER					JAS
CHIEF ENG/ARCH					EJA
FP ENGINEER					DSN

DEPARTMENT OF THE NAVY
NAVAL FACILITIES ENGINEERING SYSTEMS COMMAND
NAVAL FACILITIES ENGINEERING SYSTEMS COMMAND ~ MID-ATLANTIC
NORFOLK, VA
DC CORE

MCAS BEAUFORT
BEAUFORT, SC
P-475 AIRCRAFT MAINTENANCE HANGAR -
VOLUME 1 (BASE BID WITH OPTIONS)

HANGAR - TELECOMMUNICATIONS SITE PLAN SECTOR 3

SCALE:	As indicated
EPROJECT NO.:	1363603
CONSTR. CONTR. NO.	
NAVFAC DRAWING NO.	12859400
SHEET	228 OF 1412

TS103

DRAWFORM REVISION: 25 AUGUST 2020

Autodesk Docs://20042 VMFAT 502 F35 Maintenance Hangar/20042 F35 maint Hangar-LV-RVT/2024.rvt
11/5/2024 4:30:15 PM

NOTES:

SHEET NOTES:

A. INCLUDE THIS WORK ONLY IF BID OPTION IS AWARDED.

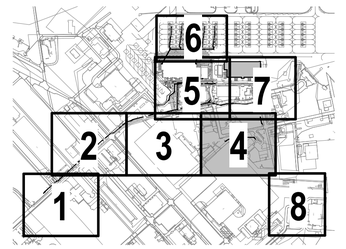

PLAN NORTH

0 20' 40' 80' 120' 160'

1" = 40' GRAPHIC SCALE

NOTE:
IF THIS DRAWING IS LESS THAN 34" X 22"
IT IS A REDUCED SIZE DRAWING

A1 TELECOMMUNICATIONS SITE PLAN - SECTOR 4

1" = 40'-0"

NO.	DESCRIPTION	DATE	APPR
1	MOD P00005	05/2023	
2	MOD P00006 AND MOD P00007	10/2025	

REGISTERED COMMUNICATIONS DISTRIBUTION DESIGNER
DONALD K SELLERS
REG. NO. 110645
EXPIRES 12-31-2028
RCDD

BAMFORTH ENGINEERS CONTRACTORS

AE INFO

APPROVED
FOR COMMANDER NAVFAC 11/21/2025

ACTIVITY
Approved by J. Scott Roberts,
Asset Management Branch Head &
Supervisory Facility Planner, PWD
Beaufort, SC via email

SATISFACTORY TO DATE	12/15/2022
DES DRS / DRW MES / CHK KLM	
PM/DM	KTB / RLH
BRANCH MANAGER	JAS
CHIEF ENG/ARCH	EJA
FP ENGINEER	DSN

DEPARTMENT OF THE NAVY
NAVAL FACILITIES ENGINEERING SYSTEMS COMMAND
DC CORE
NAVAL FACILITIES ENGINEERING SYSTEMS COMMAND – MID-ATLANTIC
NORFOLK, VA
MCAS BEAUFORT
BEAUFORT, SC

P-475 AIRCRAFT MAINTENANCE HANGAR - VOLUME 1 (BASE BID WITH OPTIONS)

HANGAR - TELECOMMUNICATIONS SITE PLAN SECTOR 4

SCALE:	As indicated
EPROJECT NO.:	1363603
CONSTR. CONTR. NO.	
NAVFAC DRAWING NO.	12859401
SHEET	229 OF 1412

TS104

DRAWFORM REVISION: 25 AUGUST 2020

Autodesk Docs://20042 MER1 502 F35 maint Hangar/20042 F35 maint Hangar LV-R_R23_central.rvt
11/5/2025 4:30:40 PM

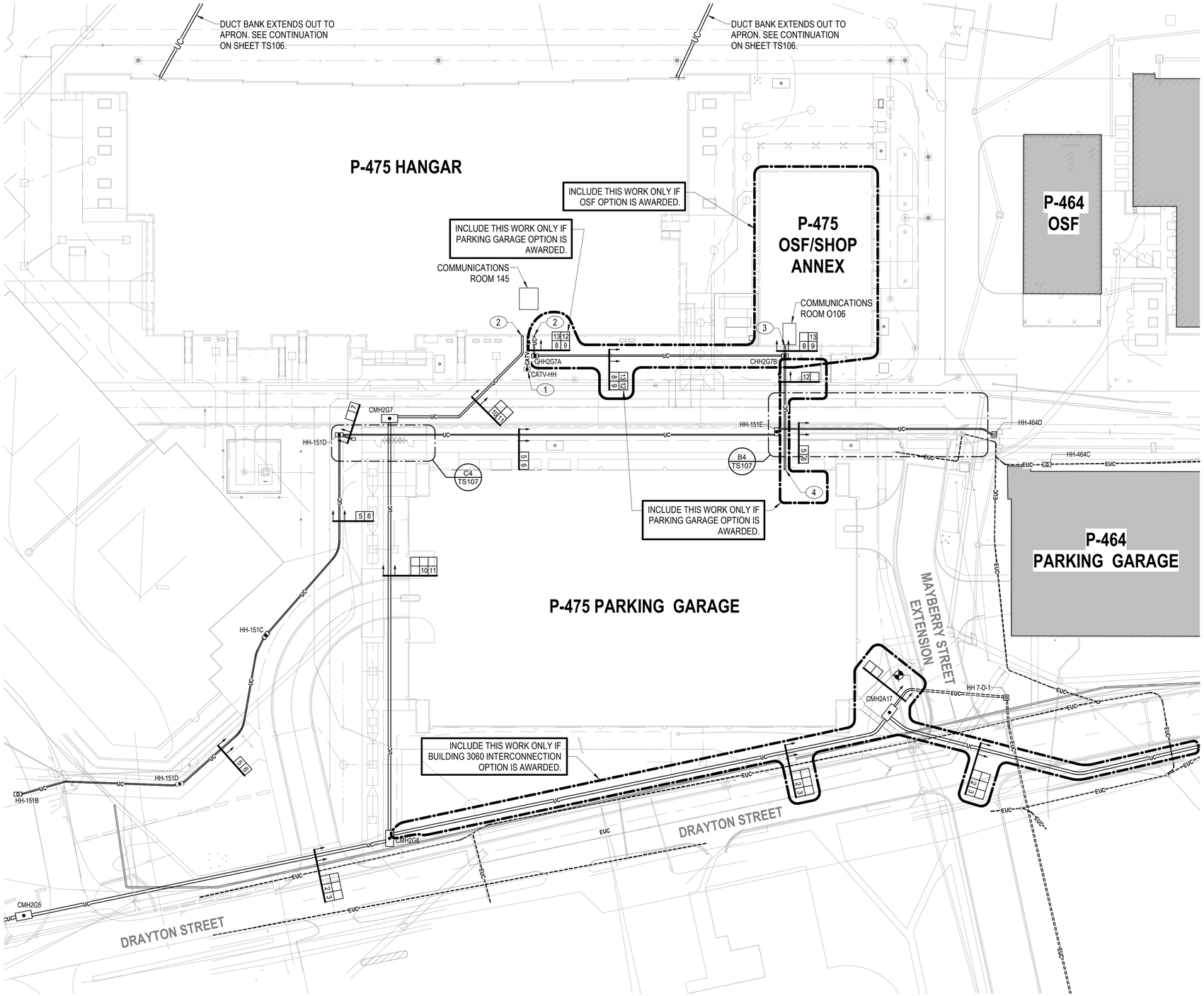

A1 TELECOMMUNICATIONS SITE PLAN - SECTOR 5

1" = 40'-0"

NOTES:

KEY NOTES (00)

1. HANDHOLE FOR CATV PROVIDER. PROVIDE 2" CONDUIT STUBBED UP INTO COMMUNICATIONS ROOM 145, SEE ENLARGED PLAN A3/TT401 FOR EXACT LOCATION. SEE HANDHOLE DETAIL A4/TS501 FOR REQUIREMENTS.
2. SEE ENLARGED PLAN A3/TT401 FOR CONTINUATION.
3. SEE ENLARGED PLAN A2/OTT101B FOR EXACT CONTINUATION.
4. EXTEND TO PARKING GARAGE ELECTRICAL ROOM P104. STUB CONDUITS UP BELOW THE AMI CABINET AND WALL MOUNTED PATCH PANEL CABINET. SEE C2/PEP101 IN VOLUME 4 FOR LOCATION.

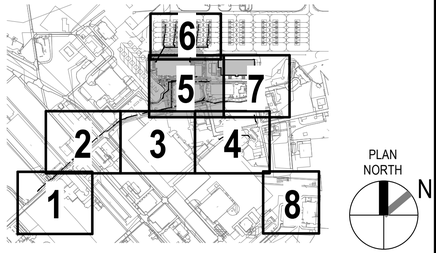

0 20' 40' 80' 120' 160'

1" = 40' GRAPHIC SCALE

NOTE:
IF THIS DRAWING IS LESS THAN 34" X 22"
IT IS A REDUCED SIZE DRAWING

SYM	DESCRIPTION	DATE	APPR
1	MOD P00005	05/2023	
2	MOD P00006 AND MOD P00007	10/2025	

NAVFAC

REGISTERED COMMUNICATIONS DISTRIBUTION DESIGNER
Bicsi
DONALD R SELLERS
REG. NO. 110645
EXPIRES 12-31-2028
RCDD
SEAL

BAMFORTH
ENGINEERS + SURVEYORS
A/E INFO

APPROVED
FOR COMMANDER NAVFAC 11/21/2025

ACTIVITY
Approved by J. Scott Roberts, Asset Management Branch Head & Supervisory Facility Planner, PWD Beaufort, SC via email.

SATISFACTORY TO DATE	12/15/2022
DES DRS	DRW MES CHK KLM
PM/DM	KTB / RLH
BRANCH MANAGER	JAS
CHIEF ENG/ARCH	EJA
FP ENGINEER	DSN

DEPARTMENT OF THE NAVY
NAVAL FACILITIES ENGINEERING SYSTEMS COMMAND
DC CORE
NAVAL FACILITIES ENGINEERING SYSTEMS COMMAND ~ MID-ATLANTIC
NORFOLK, VA

MCAS BEAUFORT
BEAUFORT, SC
P-475 AIRCRAFT MAINTENANCE HANGAR - VOLUME 1 (BASE BID WITH OPTIONS)
HANGAR - TELECOMMUNICATIONS SITE PLAN SECTOR 5

SCALE:	As indicated
EPROJECT NO.:	1363603
CONSTR. CONTR. NO.	
NAVFAC DRAWING NO.	12859402
SHEET	230 OF 1412

TS105

DRAWFORM REVISION: 25 AUGUST 2020

Autodesk Docs://20042 VMFAT 502 F35 Maintenance Hangar/20042 F35 maint Hangar LV-RV72024.rvt
11/5/2025 4:31:04 PM

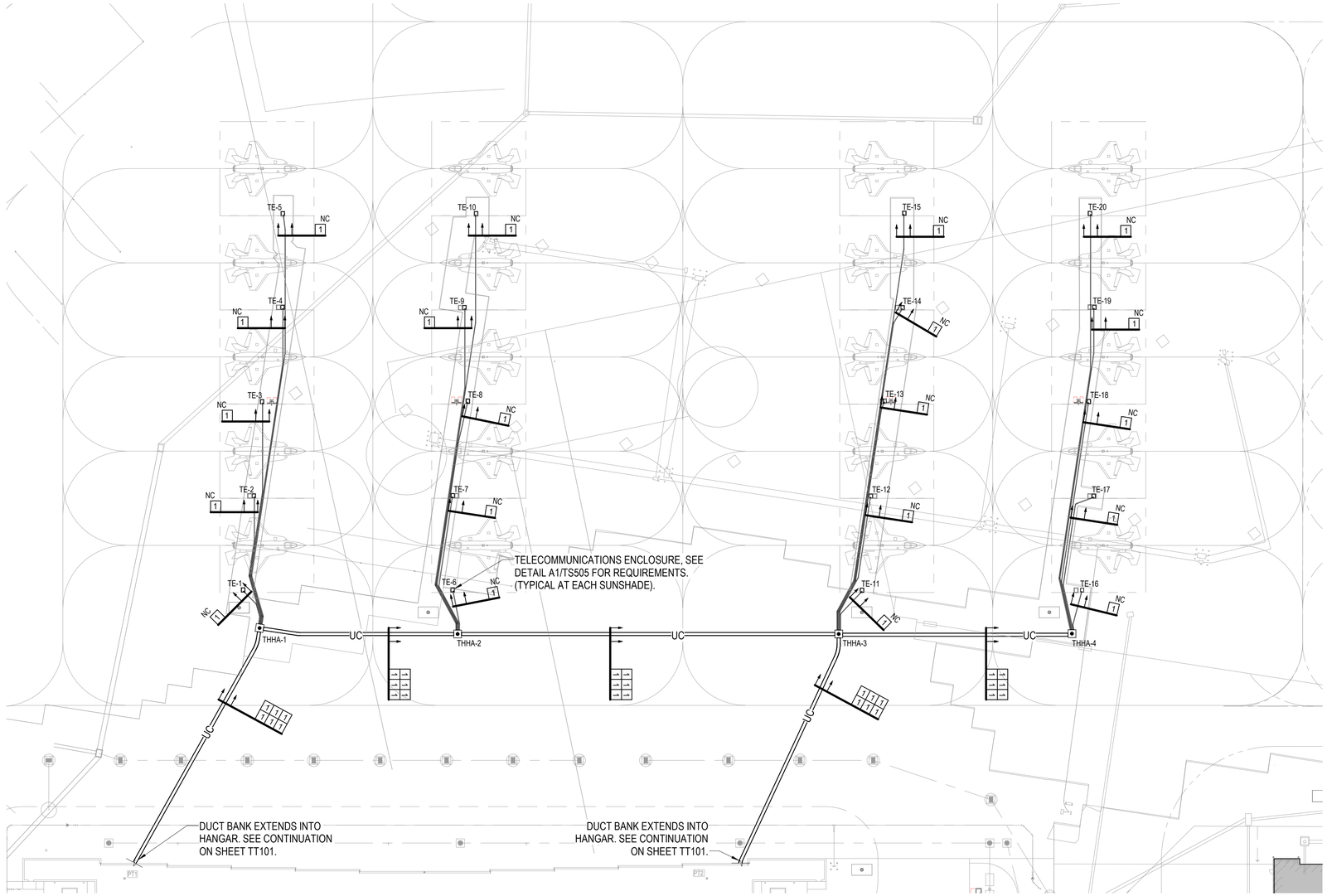

A1 TELECOMMUNICATIONS SITE PLAN - APRON

1" = 40'-0"

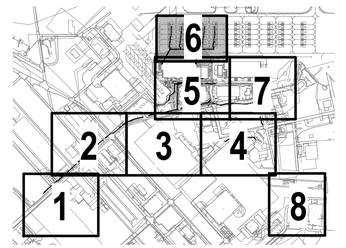

PLAN NORTH

N

0 20' 40' 80' 120' 160'

1" = 40' GRAPHIC SCALE

NOTE:
IF THIS DRAWING IS LESS THAN 34" X 22"
IT IS A REDUCED SIZE DRAWING

SYM	DESCRIPTION	DATE	APPR
1	MOD P00005	05/2023	
2	MOD P00006 AND MOD P00007	10/2025	

NAVFAC

REGISTERED COMMUNICATIONS DISTRIBUTION DESIGNER
Bicsi
DONALD R SELLERS
REG. NO. 110645
EXPIRES 12-31-2028
RCDD
SEAL

BAMFORTH
ENGINEERS + SURVEYORS

A/E INFO

APPROVED

FOR COMMANDER NAVFAC 11/21/2025

ACTIVITY
Approved by J. Scott Roberts, Asset Management Branch Head & Supervisory Facility Planner, PWD Beaufort, SC via email.

SATISFACTORY TO DATE	12/15/2022
DES DRS	DRW MES CHK KLM
PM/DM	KTB / RLH
BRANCH MANAGER	JAS
CHIEF ENG/ARCH	EJA
FP ENGINEER	DSN

DEPARTMENT OF THE NAVY
NAVAL FACILITIES ENGINEERING SYSTEMS COMMAND
NAVAL FACILITIES ENGINEERING SYSTEMS COMMAND ~ MID-ATLANTIC
NORFOLK, VA
DC CORE
MCAS BEAUFORT
BEAUFORT, SC
P-475 AIRCRAFT MAINTENANCE HANGAR - VOLUME 1 (BASE BID WITH OPTIONS)
HANGAR - TELECOMMUNICATIONS SITE PLAN SECTOR 6

SCALE:	As indicated
EPROJECT NO.:	1363603
CONSTR. CONTR. NO.	
NAVFAC DRAWING NO.	12859403
SHEET	231 OF 1412

TS106

DRAWFORM REVISION: 25 AUGUST 2020

Autodesk Docs://20042 VMFAT 502 F35 Maintenance Hangar/20042 F35 maint Hangar LV-RV7/2024.rvt
11/5/2025 4:31:30 PM

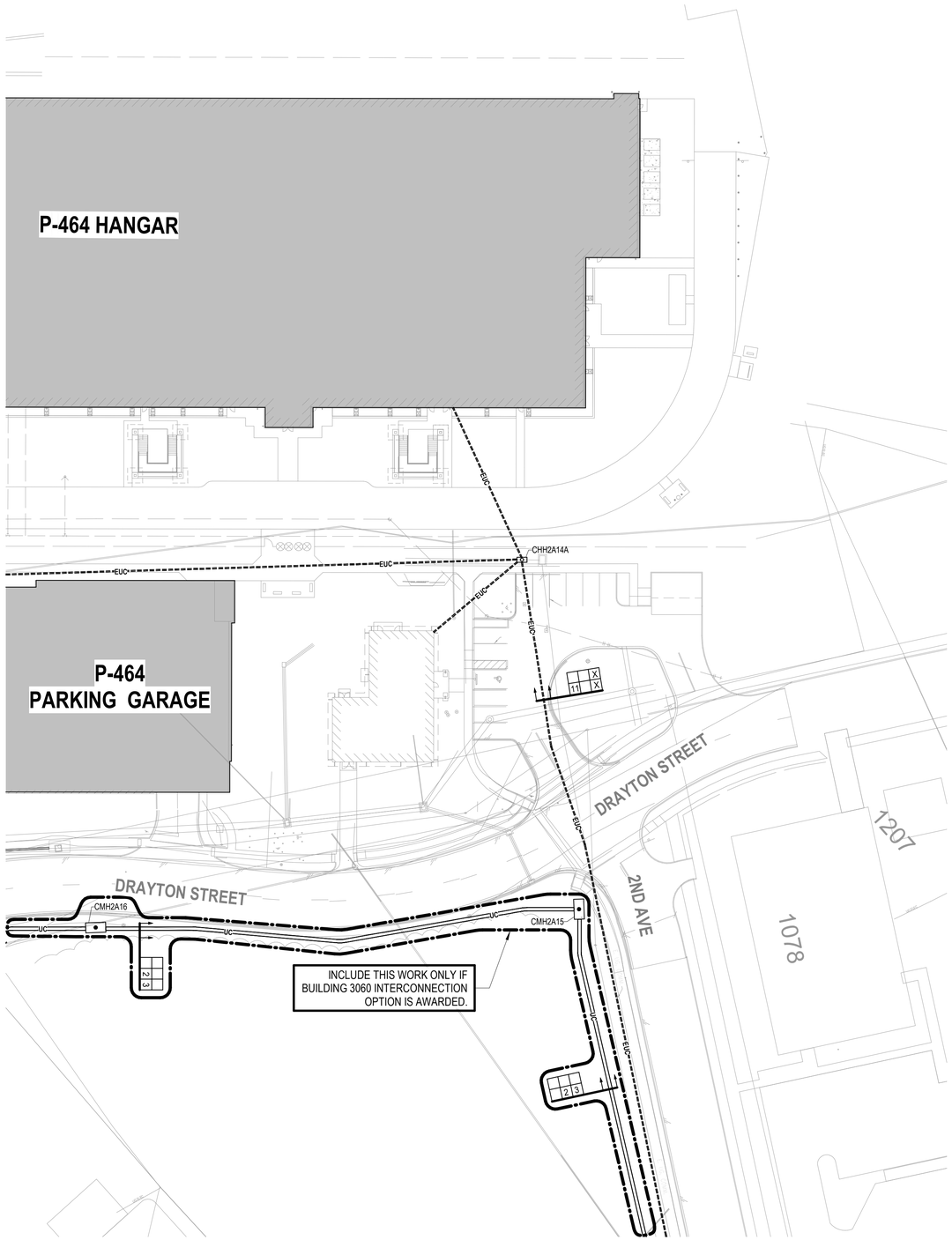

A1 TELECOMMUNICATIONS SITE PLAN - SECTOR 7
1" = 40'-0"

NOTES:

KEY NOTES (00)

1. 1" CONDUIT FROM FDB TO CAC READER. SEE A3/TS506 AND C1/TS506 FOR ADDITIONAL REQUIREMENTS.
2. 1" CONDUIT FROM FDB TO CAC READER AT TURNSTILE. SEE A1/TS506 AND C1/TS506 FOR ADDITIONAL REQUIREMENTS.
3. 1" CONDUIT FROM CARD READER ENCLOSURE TO GATE OPERATOR. CONTROL WIRES BY GATE VENDOR. SEE A3/TS506 FOR ADDITIONAL REQUIREMENTS.
4. 1" CONDUIT FROM CARD READER ENCLOSURE TO HH-151E FOR ACCESS CONTROL CABLES TO FDB. SEE A3/TS506 FOR ADDITIONAL REQUIREMENTS.
5. SECURITY CAMERA POLE PROVIDED BY NIWC. PROVIDE 1" PVC COATED RIGID STEEL CONDUIT TO FDB AS INDICATED ON DETAIL C1/TS506. PROVIDE CONCRETE FOUNDATION AND GROUNDING AS INDICATED ON DETAIL C1/TS506.

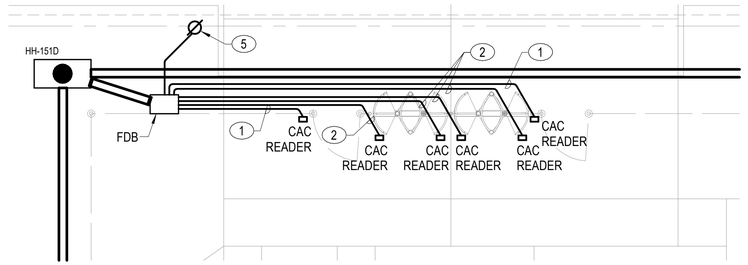

C4 TELECOMMUNICATIONS SITE PLAN - PEDESTRIAN GATE
1/8" = 1'-0"

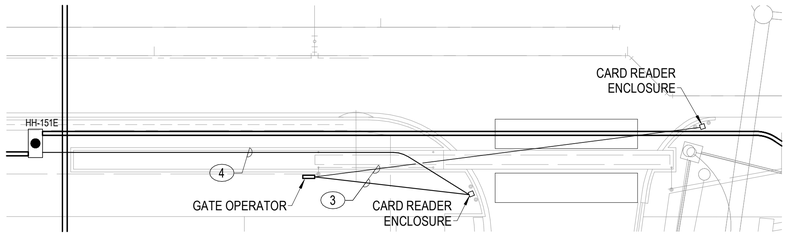

B4 TELECOMMUNICATIONS SITE PLAN - VEHICLE GATE
1/16" = 1'-0"

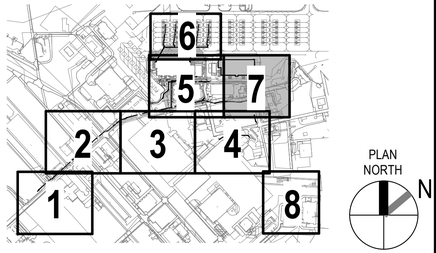

0 5' 10' 20' 30'
1/8" = 1'-0" GRAPHIC SCALE

0 10' 20' 40' 60'
1/16" = 1'-0" GRAPHIC SCALE

0 20' 40' 80' 120' 160'
1" = 40' GRAPHIC SCALE

NOTE:
IF THIS DRAWING IS LESS THAN 34" X 22"
IT IS A REDUCED SIZE DRAWING

SYM	DESCRIPTION	DATE	APPR
1	MOD P00005	05/2023	
2	MOD P00006 AND MOD P00007	10/2025	

NAVFAC

REGISTERED COMMUNICATIONS DISTRIBUTION DESIGNER
Bicsi
DONALD R. SELLERS
REG. NO. 110645
EXPIRES 12-31-2028
RCDD
SEAL

BAMFORTH
ENGINEERS + SURVEYORS
A/E INFO

APPROVED
FOR COMMANDER NAVFAC 11/21/2025

ACTIVITY
Approved by J. Scott Roberts, Asset Management Branch Head & Supervisory Facility Planner, PWD Beaufort, SC via email.

SATISFACTORY TO DATE					12/15/2022
DES	DRS	DRW	MES	CHK	KLM
PM/DM					KTB / RLH
BRANCH MANAGER					JAS
CHIEF ENG/ARCH					EJA
FP ENGINEER					DSN

DEPARTMENT OF THE NAVY
NAVAL FACILITIES ENGINEERING SYSTEMS COMMAND
DC CORE
NAVAL FACILITIES ENGINEERING SYSTEMS COMMAND ~ MID-ATLANTIC
NORFOLK, VA
MCAS BEAUFORT
BEAUFORT, SC
P-475 AIRCRAFT MAINTENANCE HANGAR - VOLUME 1 (BASE BID WITH OPTIONS)
HANGAR - TELECOMMUNICATIONS SITE PLAN SECTOR 7

SCALE: As indicated
EPROJECT NO.: 1363603
CONSTR. CONTR. NO.
NAVFAC DRAWING NO. 12859404
SHEET 232 OF 1412
TS107
DRAWFORM REVISION: 25 AUGUST 2020

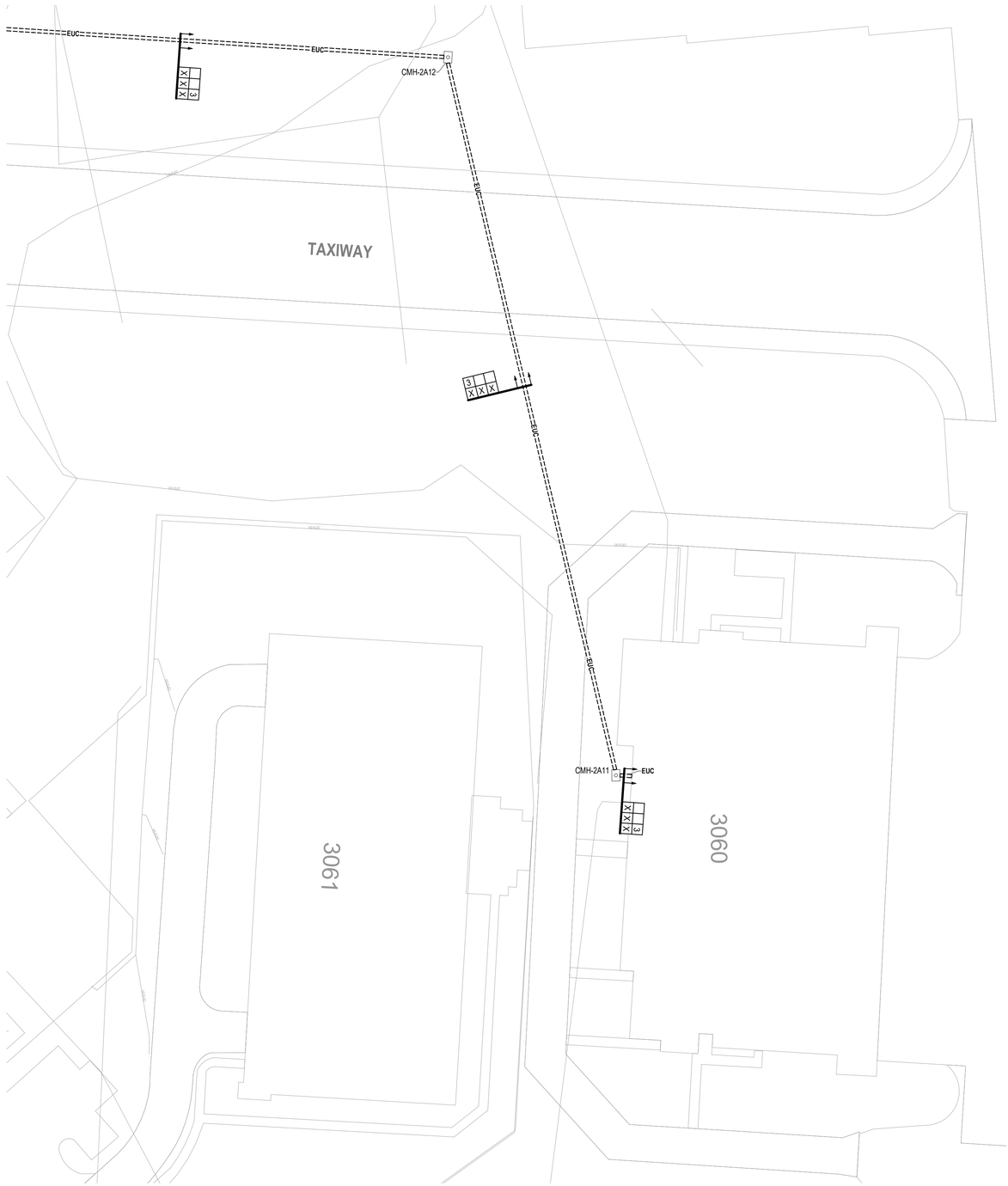

A2 TELECOMMUNICATIONS SITE PLAN - SECTOR 8
1" = 40'-0"

NOTES:

SHEET NOTES:

A. INCLUDE THIS WORK ONLY IF BUILDING 3060 INTERCONNECTION OPTION IS AWARDED.

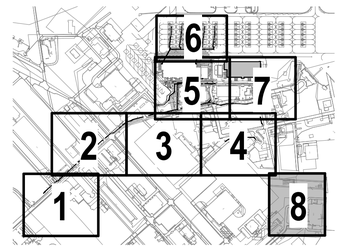

PLAN NORTH

N

0 20' 40' 80' 120' 160'

1" = 40' GRAPHIC SCALE

NOTE:
IF THIS DRAWING IS LESS THAN 34" X 22"
IT IS A REDUCED SIZE DRAWING

SHEET INSERTED FOR MOD 06 / MOD 07. NAVFAC NUMBER OUT OF ORDER

SYM	DESCRIPTION	DATE	APPR
1	MOD P00005	05/2023	
2	MOD P00006 AND MOD P00007	10/2025	

NAVFAC

REGISTERED COMMUNICATIONS DISTRIBUTION DESIGNER
Bicsi
DONALD R SELLERS
REG. NO. 110645
EXPIRES 12-31-2028
RCDD
SEAL

BAMFORTH
ENGINEERS + SURVEYORS

A/E INFO

APPROVED

FOR COMMANDER NAVFAC 11/21/2025

ACTIVITY
Approved by J. Scott Roberts,
Asset Management Branch Head &
Supervisory Facility Planner, PWD
Beaufort, SC via email.

SATISFACTORY TO DATE	12/15/2022
DES DRS	DRW MES CHK KLM
PM/DM	KTB / RLH
BRANCH MANAGER	JAS
CHIEF ENG/ARCH	EJA
FP ENGINEER	DSN

DEPARTMENT OF THE NAVY
NAVAL FACILITIES ENGINEERING SYSTEMS COMMAND
NAVAL FACILITIES ENGINEERING SYSTEMS COMMAND ~ MID-ATLANTIC
NORFOLK, VA
DC CORE
MCAS BEAUFORT
BEAUFORT, SC
P-475 AIRCRAFT MAINTENANCE HANGAR - VOLUME 1 (BASE BID WITH OPTIONS)
HANGAR - TELECOMMUNICATIONS SITE PLAN SECTOR 8

SCALE:	As indicated
EPROJECT NO.:	1363603
CONSTR. CONTR. NO.	
NAVFAC DRAWING NO.	12871510
SHEET	232A OF 1412

TS108

DRAWFORM REVISION: 25 AUGUST 2020

Autodesk Docs://20042 VMFAT 502 F35 Maintenance Hangar/20042 F35 maint Hangar LV-RVT2024.rvt
11/6/2025 6:31:53 PM

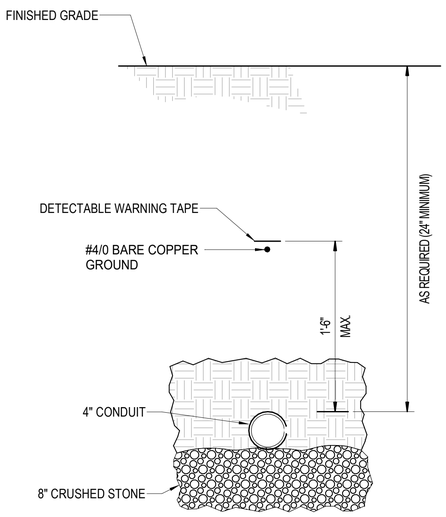

NOTES:

A. WARNING TAPE SHALL BE IMPRINTED WITH THE WORDS "WARNING - TELECOMMUNICATIONS CABLE BELOW" AT NO MORE THAN 48" INTERVALS. TAPE SHALL HAVE MINIMUM THICKNESS OF 0.004" AND SHALL HAVE MINIMUM STRENGTH OF 1750 PSI. TAPE SHALL HAVE INTEGRAL MEANS OF DETECTION BY A METAL DETECTOR WHEN THE TAPE IS BURIED 3 FEET DEEP AND SHALL BE MADE OF MATERIALS RESISTANT TO DEGRADATION CAUSED BY SOIL CONDITIONS.

B. PROVIDE DUCT SPACERS TO SUPPORT CONDUIT PRIOR TO BACK-FILL. MAXIMUM SPACING OF 5'-0".

A1 1-WAY COMMUNICATIONS DUCT BANK, NON-CONCRETE ENCASED

NOT TO SCALE

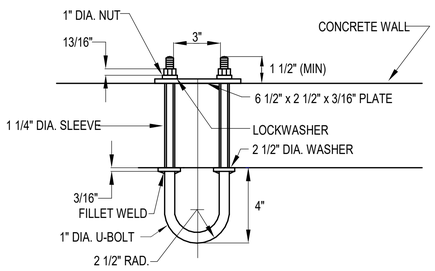

ALTERNATE METHOD

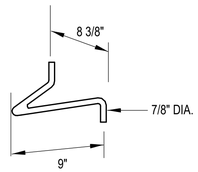

CAST IN PLACE

NOTE:
ALL METAL PARTS SHALL BE HOT DIPPED GALVANIZED

DETAIL OF PULLING-IN IRON

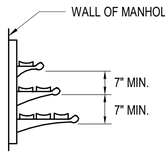

TYPICAL CABLE RACK

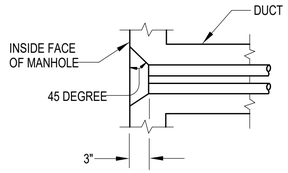

TYPICAL DUCT ENTRANCE

A2 PULLING-IN IRONS, CABLE RACK AND DUCT ENTRANCE

NOT TO SCALE

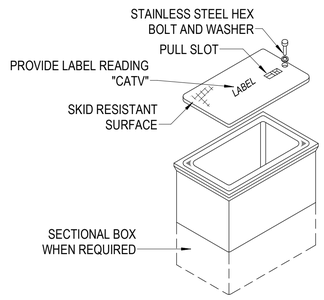

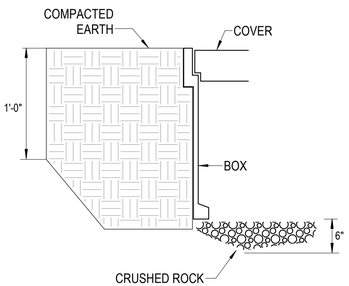

HANDHOLE REQUIREMENTS:

1. HOUSING SHALL BE A 24" X 18" POLYMER CONCRETE REINFORCED WITH A HEAVY WEAVE FIBERGLASS REINFORCING WITH COMPRESSIVE STRENGTH OF NO LESS THAN 10,000 PSI.
2. PROVIDE TIER 22 RATING PER ANSI/SCTE 77 COVER AND BOX SHALL WITHSTAND A SERVICE LOAD OF NO LESS THAN 22,500 LBS OVER A 10" x 20" AREA.
3. PROVIDE STAINLESS STEEL BOLTS AND INSERTS.

A4 HANDHOLE DETAIL

NOT TO SCALE

NOTE:
IF THIS DRAWING IS LESS THAN 34" X 22"
IT IS A REDUCED SIZE DRAWING

NO.	DESCRIPTION	DATE	APPR
1	MOD P00005	05/2023	
2	MOD P00006 AND MOD P00007	10/2025	

NAVFAC

REGISTERED COMMUNICATIONS DISTRIBUTION DESIGNER
Bicsi
DONALD K. SELLERS
REG. NO. 110645
EXPIRES 12-31-2029
RCDD
SEAL

BAMFORTH ENGINEERS + CONSULTANTS

AE INFO

APPROVED

FOR COMMANDER NAVFAC 11/21/2025

ACTIVITY
Approved by J. Scott Roberts,
Asset Management Branch Head &
Supervisory Facility Planner, PWD
Beaufort, SC via email.

SATISFACTORY TO DATE 12/15/2022

DES	DRS	DRW	MES	CHK	KLM

PM/DM	KTB / RLH
BRANCH MANAGER	JAS
CHIEF ENG/ARCH	EJA
FP ENGINEER	DSN

DEPARTMENT OF THE NAVY
NAVAL FACILITIES ENGINEERING SYSTEMS COMMAND
DC CORE:
MCAS BEAUFORT

NAVAL FACILITIES ENGINEERING SYSTEMS COMMAND ~ MID-ATLANTIC
NORFOLK, VA

BEAUFORT, SC

P-475 AIRCRAFT MAINTENANCE HANGAR - VOLUME 1 (BASE BID WITH OPTIONS)

HANGAR - TELECOMMUNICATION SITE DETAILS

SCALE:	As indicated
EPROJECT NO.:	1363603
CONSTR. CONTR. NO.	
NAVFAC DRAWING NO.	12859405
SHEET	233 OF 1412

TS501

DRAWFORM REVISION: 25 AUGUST 2020

Autodesk Docs://2042 NAVFAC 332 FSI Maintenance Hangar/2042-735-maint-hangar-LV-R17-2024.rvt
11/3/2025 4:52:30 PM

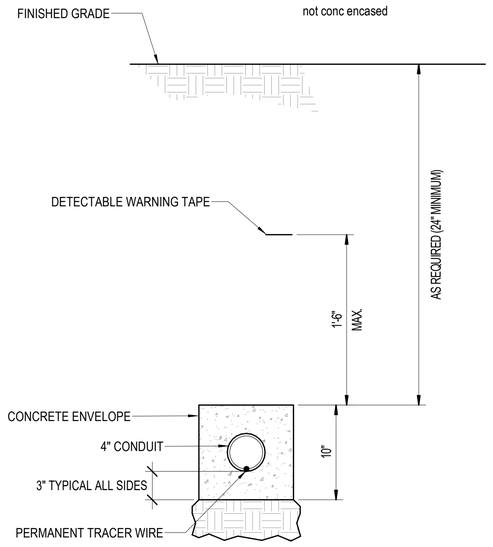

NOTES:

A. WARNING TAPE SHALL BE IMPRINTED WITH THE WORDS "WARNING - TELECOMMUNICATIONS CABLE BELOW" AT NO MORE THAN 48" INTERVALS. TAPE SHALL HAVE MINIMUM THICKNESS OF 0.004" AND SHALL HAVE MINIMUM STRENGTH OF 1750 PSI TAPE SHALL HAVE INTEGRAL MEANS OF DETECTION BY A METAL DETECTOR WHEN THE TAPE IS BURIED 3 FEET DEEP AND SHALL BE MADE OF MATERIALS RESISTANT TO DEGRADATION CAUSED BY SOIL CONDITIONS.

B. TRACER WIRES SHALL BE #12 AWG MINIMUM, INSULATED AND COATED WITH MINIMUM 30 mm POLYETHYLENE JACKET DESIGNED FOR BURIED USE

C. TERMINATE TRACER WIRE EITHER ON A PORT IN A MANHOLE, OR A TRACER WIRE TEST STATION

D. TEST TRACER WIRE TO VERIFY CONTINUITY AND PROVIDE WRITTEN REPORT TO THE CONTRACTING OFFICER ALL TRACER WIRE SPLICES SHALL BE COMPRESSION TYPE.

E. PROVIDE DUCT SPACERS TO SUPPORT CONDUITS PRIOR TO CONDUIT POURING AND PROVIDE SPACERS EVERY 5 FEET ON CENTER.

F. PROVIDE 3-CELL FABRIC MESH INNERDUCT IN ALL CONDUITS USED TO PULL NEW FIBER OPTIC CABLES.

C1 1-WAY COMMUNICATIONS DUCT BANK

NOT TO SCALE

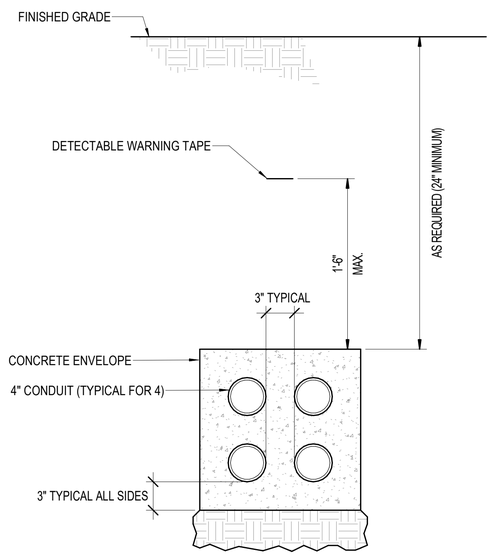

NOTES:

A. WARNING TAPE SHALL BE IMPRINTED WITH THE WORDS "WARNING - TELECOMMUNICATIONS CABLE BELOW" AT NO MORE THAN 48" INTERVALS. TAPE SHALL HAVE MINIMUM THICKNESS OF 0.004" AND SHALL HAVE MINIMUM STRENGTH OF 1750 PSI TAPE SHALL HAVE INTEGRAL MEANS OF DETECTION BY A METAL DETECTOR WHEN THE TAPE IS BURIED 3 FEET DEEP AND SHALL BE MADE OF MATERIALS RESISTANT TO DEGRADATION CAUSED BY SOIL CONDITIONS.

B. PROVIDE INNERDUCTS. INNERDUCT SHALL HAVE AN INTEGRAL #12 TRACER WIRE. TERMINATE TRACER WIRE EITHER ON A PORT IN A MANHOLE, OR A TRACER WIRE TEST STATION. TEST TRACER WIRE TO VERIFY CONTINUITY AND PROVIDE WRITTEN REPORT TO THE CONTRACTING OFFICER LISTING ALL TRACER WIRE SPLICES SHALL BE COMPRESSION TYPE.

C. PROVIDE DUCT SPACERS TO SUPPORT CONDUITS PRIOR TO CONDUIT POURING AND PROVIDE SPACERS EVERY 5 FEET ON CENTER.

A1 4-WAY COMMUNICATIONS DUCT BANK

NOT TO SCALE

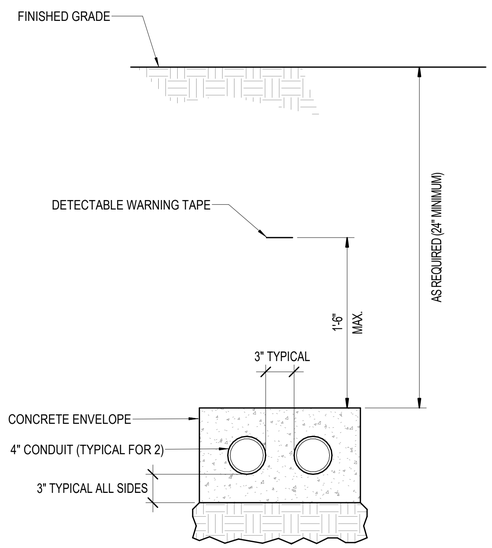

NOTES:

A. WARNING TAPE SHALL BE IMPRINTED WITH THE WORDS "WARNING - TELECOMMUNICATIONS CABLE BELOW" AT NO MORE THAN 48" INTERVALS. TAPE SHALL HAVE MINIMUM THICKNESS OF 0.004" AND SHALL HAVE MINIMUM STRENGTH OF 1750 PSI TAPE SHALL HAVE INTEGRAL MEANS OF DETECTION BY A METAL DETECTOR WHEN THE TAPE IS BURIED 3 FEET DEEP AND SHALL BE MADE OF MATERIALS RESISTANT TO DEGRADATION CAUSED BY SOIL CONDITIONS.

B. PROVIDE INNERDUCTS. INNERDUCT SHALL HAVE AN INTEGRAL #12 TRACER WIRE. TERMINATE TRACER WIRE EITHER ON A PORT IN A MANHOLE, OR A TRACER WIRE TEST STATION. TEST TRACER WIRE TO VERIFY CONTINUITY AND PROVIDE WRITTEN REPORT TO THE CONTRACTING OFFICER LISTING ALL TRACER WIRE SPLICES SHALL BE COMPRESSION TYPE.

C. PROVIDE DUCT SPACERS TO SUPPORT CONDUITS PRIOR TO CONDUIT POURING AND PROVIDE SPACERS EVERY 5 FEET ON CENTER.

C3 2-WAY COMMUNICATIONS DUCT BANK

NOT TO SCALE

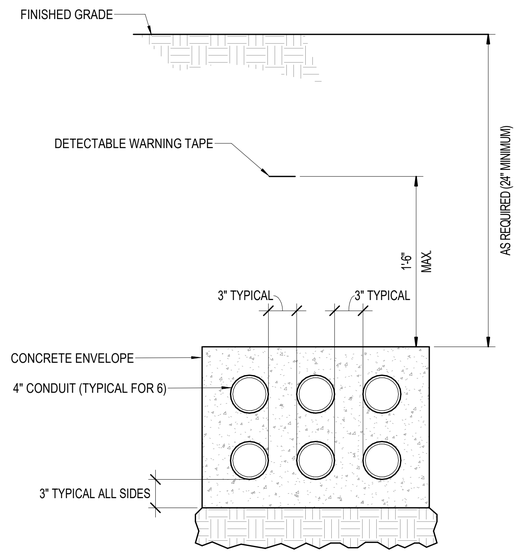

NOTES:

A. WARNING TAPE SHALL BE IMPRINTED WITH THE WORDS "WARNING - TELECOMMUNICATIONS CABLE BELOW" AT NO MORE THAN 48" INTERVALS. TAPE SHALL HAVE MINIMUM THICKNESS OF 0.004" AND SHALL HAVE MINIMUM STRENGTH OF 1750 PSI TAPE SHALL HAVE INTEGRAL MEANS OF DETECTION BY A METAL DETECTOR WHEN THE TAPE IS BURIED 3 FEET DEEP AND SHALL BE MADE OF MATERIALS RESISTANT TO DEGRADATION CAUSED BY SOIL CONDITIONS.

B. PROVIDE INNERDUCTS. INNERDUCT SHALL HAVE AN INTEGRAL #12 TRACER WIRE. TERMINATE TRACER WIRE EITHER ON A PORT IN A MANHOLE, OR A TRACER WIRE TEST STATION. TEST TRACER WIRE TO VERIFY CONTINUITY AND PROVIDE WRITTEN REPORT TO THE CONTRACTING OFFICER LISTING ALL TRACER WIRE SPLICES SHALL BE COMPRESSION TYPE.

C. PROVIDE DUCT SPACERS TO SUPPORT CONDUITS PRIOR TO CONDUIT POURING AND PROVIDE SPACERS EVERY 5 FEET ON CENTER.

A3 6-WAY COMMUNICATIONS DUCT BANK

NOT TO SCALE

NOTE:
IF THIS DRAWING IS LESS THAN 34" X 22"
IT IS A REDUCED SIZE DRAWING

NO	DESCRIPTION	DATE	APPR
1	MOD P00005	05/2023	
2	MOD P00006 AND MOD P00007	10/2025	

NAVFAC

REGISTERED COMMUNICATIONS DISTRIBUTION DESIGNER
Bicsi
DONALD K SELLERS
REG. NO. 110645
EXPIRES 12-31-2028
RCDD

BAMFORTH ENGINEERS CONTRACTORS

A/E INFO

APPROVED
FOR COMMANDER NAVFAC 11/21/2025
ACTIVITY: Approved by J. Scott Roberts; Asset Management Branch Head & Supervisory Facility Planner, PWD Beaufort, SC via email.
SATISFACTORY TO DATE 12/15/2022
DES DRS | DRW MES | CHK KLM
PM/DM KTB / RLH
BRANCH MANAGER JAS
CHIEF ENG/ARCH EJA
FP ENGINEER DSN

DEPARTMENT OF THE NAVY
NAVAL FACILITIES ENGINEERING SYSTEMS COMMAND
DC CORE
NAVAL FACILITIES ENGINEERING SYSTEMS COMMAND – MID-ATLANTIC
NORFOLK, VA
MCAS BEAUFORT
BEAUFORT, SC
P-475 AIRCRAFT MAINTENANCE HANGAR - VOLUME 1 (BASE BID WITH OPTIONS)
HANGAR - TELECOMMUNICATION SITE DETAILS

SCALE: NOT TO SCALE
EPROJECT NO.: 1363603
CONSTR. CONTR. NO.
NAVFAC DRAWING NO.: 12859406
SHEET 234 OF 1412

TS502

DRAWFORM REVISION: 25 AUGUST 2020

Autodesk Docs://0042 MFAT 302 FS Maintenance Hangar/20042 FS maint Hangar LV-RVT2024.rvt
11/5/2024 4:42:46 PM

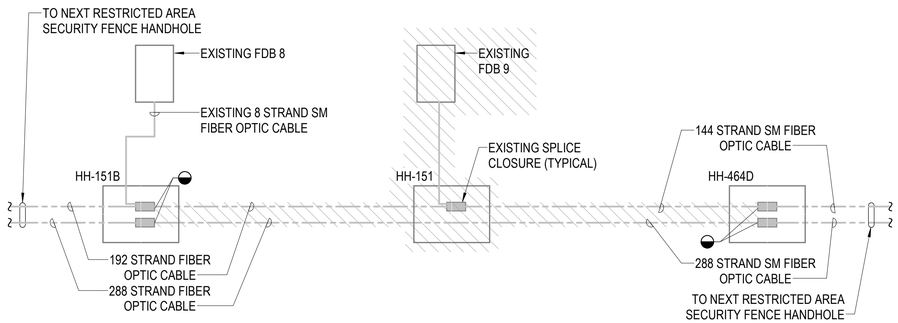

D1 RESTRICTED AREA SECURITY FENCE FIBER RISER - DEMOLITION

NOT TO SCALE

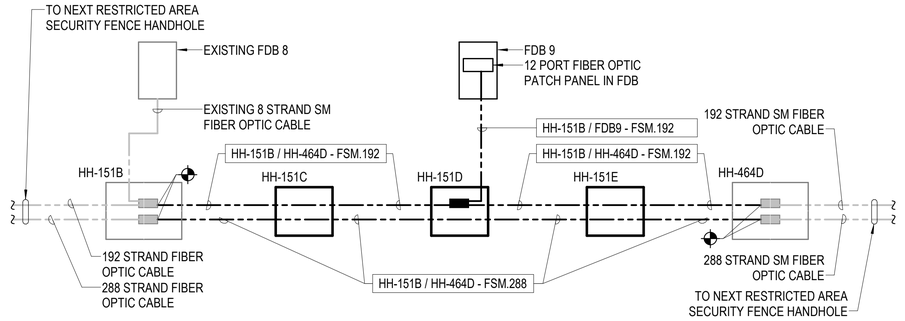

D4 RESTRICTED AREA SECURITY FENCE FIBER RISER

NOT TO SCALE

PROVIDE AIRCRAFT LOADING MEETING THE FOLLOWING REQUIREMENTS FOR THHA-1, THHA-2, THHA-3 AND THHA-4:

A. DESIGN COVERS FOR 100,000 LB WHEEL LOADS WITH 250 PSI TIER PRESSURE.
B. FOR SPANS 2 FEET OR GREATER, THE DESIGN MUST BE BASED ON THE NUMBER OF WHEELS WHICH WILL FIT IN THE SPAN. USE WHEEL LOADS OF 75,000 LB EACH.

NOTES:

1. CONCRETE: 6.500 p.s.i. @ 28 DAYS, 5% 8% ENTRAINED AIR (MIX DESIGN #9).
2. REBAR: ASTM A-706, GRADE 60, BLACK BAR.
3. DESIGN CRITERIA: ASTM C858. LOADING PER ASTM C857, 2-0 MIN. TO 5-0" MAX. EARTH COVER. AASHTO HS 20 WHEEL LOAD & APPLICABLE IMPACT. VERTICAL & LATERAL SOIL PRESSURES DETERMINED USING 120 PCF SOIL DENSITY. GROUNDWATER 3:0 BELOW GRADE. REINFORCING COVER PER ACI 318.
4. (2) 7/8" Ø STEEL, HOT-DIPPED GALVANIZED PULLING IRON, I-BOLT TYPE.
5. (8) 4Tx3.5" FORGED FOOT LIFTING ANCHORS (LA-RL-3.5-DFF).
6. UCP SUMP DEPRESSION WITH PLASTIC LID.
7. (4) BONDING RIBBON ASSEMBLIES, INCLUDING:
   (4) Ø 1/4" INSERTS WITH HEX HEAD BOLTS.
   (6') 1/16"x3/8" SOFT TINNED COPPER BONDING RIBBON.
   (4) 5/8" CABLE CLAMPS.
8. (16) Ø1/2" PLASTIC THREADED INSERTS.
9. (2 ROLLS) 1"x14.5'/roll BUTYL RUBBER JOINT SEALANT.
10. STRUCTURE IS NOT WATERTIGHT.
11. STRUCTURE TOLERANCE= ± 1/4".
12. WEIGHT: TOP SECTION: 2560#
    BOTTOM SECTION: 2,955#
    TOTAL: 5,515#

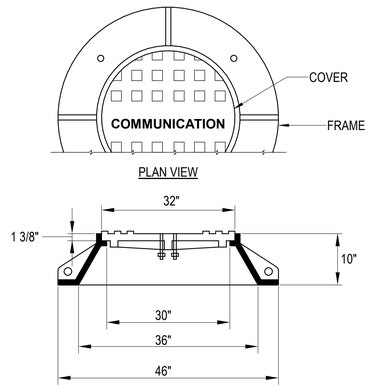

30B STANDARD FRAME AND COVER

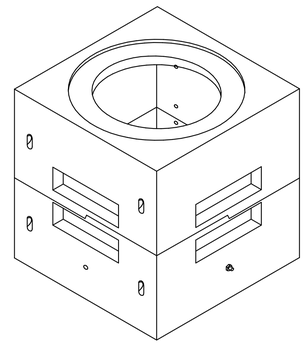

ISOMETRIC VIEW

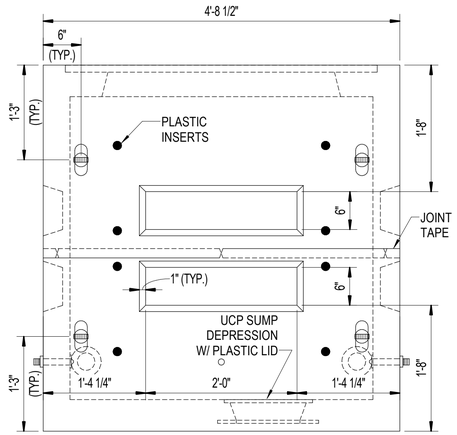

FRONT ELEVATION

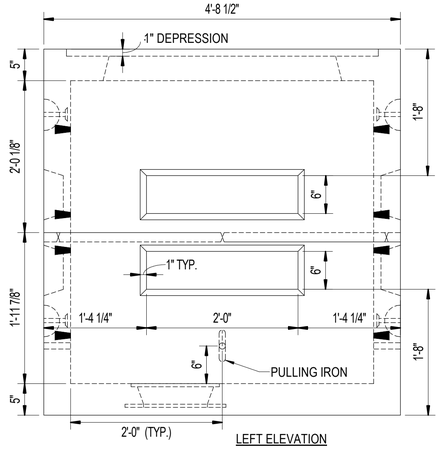

LEFT ELEVATION

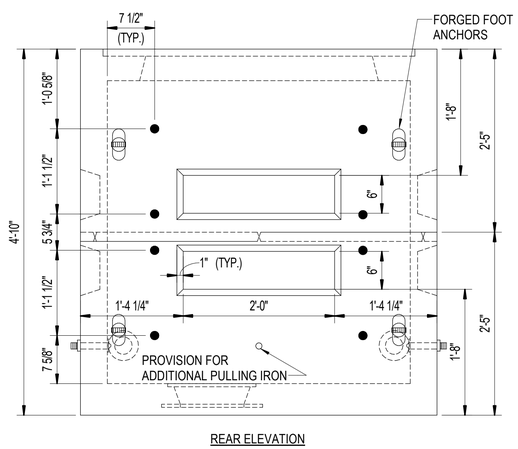

REAR ELEVATION

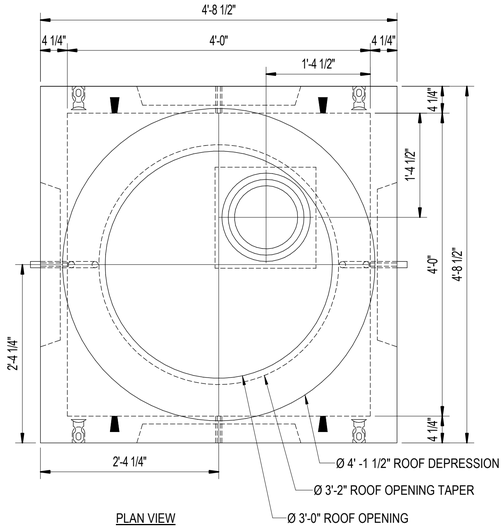

PLAN VIEW

A1 CONCRETE COMMUNICATIONS HAND HOLE

NOT TO SCALE

NOTE:
IF THIS DRAWING IS LESS THAN 34" X 22"
IT IS A REDUCED SIZE DRAWING

NO.	MOD	DESCRIPTION	DATE	APPR
1	P00005		05/2023	
2	P00006 AND MOD P00007		10/2025	

NAVFAC

REGISTERED COMMUNICATIONS DISTRIBUTION DESIGNER
Bicsi
DONALD R. SELLERS
REG. NO. 110645
EXPIRES 12-31-2028
RCDD

BAMFORTH ENGINEERS CONSTRUCTORS

A/E INFO

APPROVED
FOR COMMANDER NAVFAC 11/21/2025

ACTIVITY
Approved by J. Scott Roberts,
Asset Management Branch Head &
Supervisory Facility Planner, PWD
Beaufort, SC via email.

SATISFACTORY TO DATE	12/15/2022
DES DRS / DRW MES / CHK KLM	
PM/DM	KTB / RLH
BRANCH MANAGER	JAS
CHIEF ENG/ARCH	EJA
FP ENGINEER	DSN

NAVAL FACILITIES ENGINEERING SYSTEMS COMMAND
NAVFAC, VA
NAVAL FACILITIES ENGINEERING SYSTEMS COMMAND ~ MID-ATLANTIC
DEPARTMENT OF THE NAVY
DC CORE
MCAS BEAUFORT
BEAUFORT, SC
P-475 AIRCRAFT MAINTENANCE HANGAR - VOLUME 1 (BASE BID WITH OPTIONS)
HANGAR - TELECOMMUNICATION SITE DETAILS

SCALE:	As indicated
EPROJECT NO.:	1363603
CONSTR. CONTR. NO.	
NAVFAC DRAWING NO.	12859407
SHEET	235 OF 1412

TS503

DRAWFORM REVISION: 25 AUGUST 2020

Autodesk Docs://2022 VA/A1 302 F38 Maintenance Hangar/22042 F38 mast Hangar LV-RVT2024.rvt
11/3/2023 4:23:37 PM

NOTES:
1. PRECAST MAINTENANCE HOLES MUST MEET ASTM C858 STANDARD SPECIFICATION FOR UNDERGROUND PRECAST CONCRETE UTILITY STRUCTURES.
2. ALL CONCRETE MUST HAVE A MINIMUM 28-DAY COMPRESSIVE STRENGTH OF 4000 PSI.
3. MINIMUM DESIGN LIVE LOAD MUST BE HS-20.
4. WALL AND SLAB (ROOF & FLOOR) THICKNESSES SHOWN ARE MINIMUM. ACTUAL WALL AND SLAB THICKNESS MUST BE SHOWN ON SHOP DRAWINGS TO BE REVIEWED AND APPROVED.
5. ACTUAL PLACEMENT OF ACCESS OPENING AND CASTING TO BE UTILIZED MUST BE SHOWN ON THE SHOP DRAWINGS TO BE REVIEWED AND APPROVED.
6. DETAIL SHOWS CENTER SEAM (JOINT) PRECAST STRUCTURE. TOP SEAM STRUCTURES ARE PERMITTED BY US GOVERNMENT APPROVAL, AND MUST BE SHOWN ON SHOP DRAWINGS TO BE REVIEWED AND APPROVED.
7. FRAMES AND COVERS MUST BE CONSTRUCTED USING GRAY IRON CONFORMING TO ASTM A48 OR DUCTILE IRON CONFORMING TO ASTM A536. LOAD RATING MUST BE AS NOTED ON DRAWING.
8. ALL ANCHORING COMPONENTS WILL BE MANUFACTURED IN THE USA AND WILL SATISFY THE TESTING CONDITIONS OF ASTM E488.
9. ALL MAINTENANCE HOLES WILL HAVE AN INTEGRATED GROUNDING SYSTEM.
10. REINFORCING STEEL MUST MEET ASTM A706/A706M.
11. PROVIDE BELL-ENDS FOR EACH DUCT ENTRANCE.
12. 7-RUNG LADDER SHALL HAVE GROUND HOOK AT TOP OF LADDER.

EQUIPMENT / MATERIAL SUPPLIED WITH A STANDARD MAINTENANCE HOLE	MULTIDIRECTIONAL
	MANHOLE
	12' x 6' x 7'H
BONDING RIBBON #6 AWG (OPTIONAL)	65
BONDING RIBBON CLAMPS	20
CABLE RACK 30"	-
CABLE RACK 47 HOLE	14
B CORNER CABLE RACK SUPPORT	4
CABLE RACK HOOK 7 1/2"	14 MINIMUM
CABLE RACK STAND OFF BRACKET	12
CONCRETE COLLAR 6'	1
COVER (LID) 30" DIAMETER	1
TRAFFIC RATED FRAME AND COVER	1
0.75" X 10' COPPER CLAD STEEL GROUND ROD (OPTIONAL)	1
GROUND ROD CLAMP 3/4"	1
METAL HIT ANCHOR	20
PULL-IN IRONS	4
SUMP	1
FLEXIBLE GROUND STRAP 3'	2
7-RUNG LADDER	1

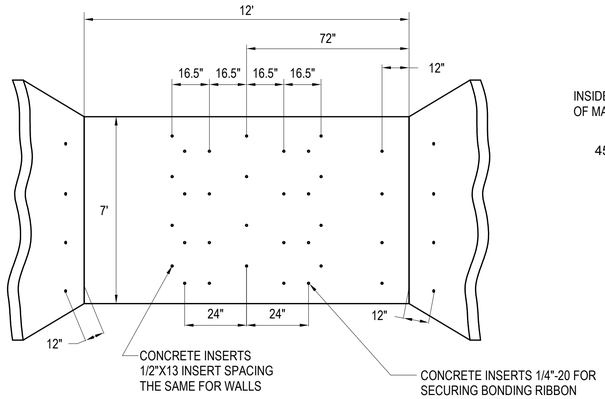

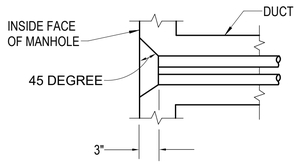

TYPICAL DUCT ENTRANCE

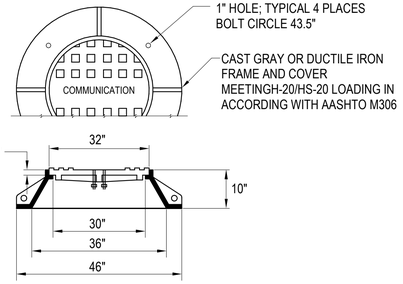

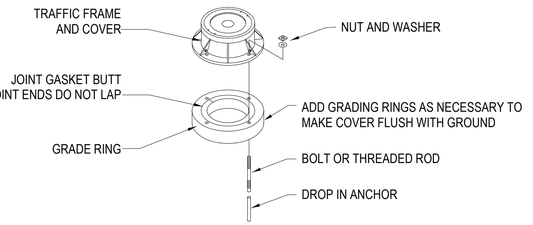

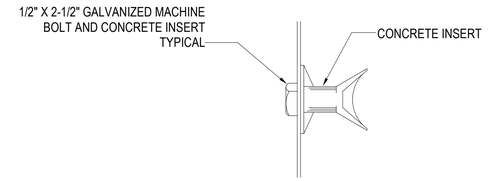

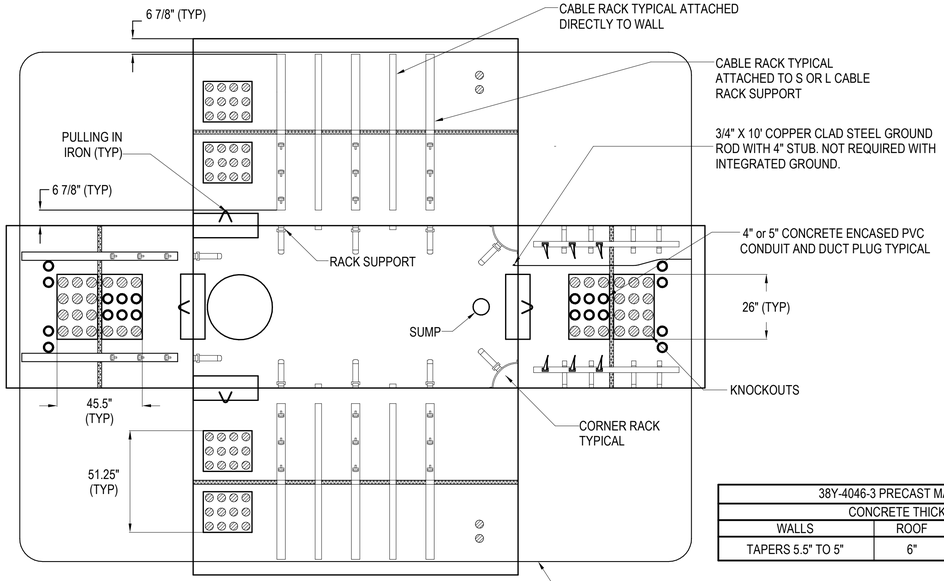

38Y MANHOLE FITTINGS TYPICAL
12'X6'X7'

38Y-4046-3 PRECAST MANHOLE		
CONCRETE THICKNESS		
WALLS	ROOF	FLOOR
TAPERS 5.5" TO 5"	6"	TAPERS 6"TO 5.5"

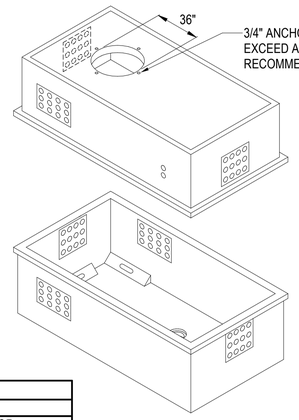

CABLE ENTRANCES WITH DUCT TERMINATOR OPTION

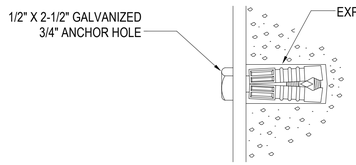

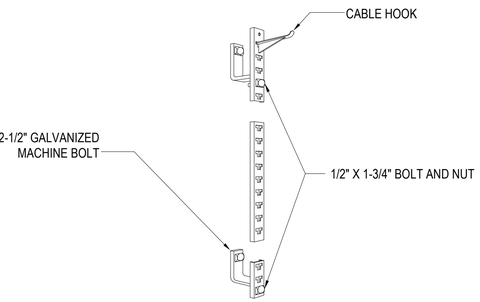

NOTE:
IF THIS DRAWING IS LESS THAN 34" X 22"
IT IS A REDUCED SIZE DRAWING

A1 TELECOMMUNICATIONS MANHOLE
NOT TO SCALE

NO	DESCRIPTION	DATE	APPR
1	MOD P00005	05/2023	
2	MOD P00006 AND MOD P00007	10/2025	

NAVFAC

REGISTERED COMMUNICATIONS DISTRIBUTION DESIGNER
Bicsi
DONALD K SELLERS
REG. NO. 110645
EXPIRES 12-31-2028
RCDD
SEAL

BAMFORTH ENGINEERS + CONTRACTORS
AE INFO

APPROVED
FOR COMMANDER NAVFAC 11/21/2025
ACTIVITY Approved by J. Scott Roberts, Asset Management Branch Head & Supervisory Facility Planner, PWD Beaufort, SC via email.
SATISFACTORY TO DATE 12/15/2022
DES DRS | DRW MES | CHK KLM
PM/DM KTB / RLH
BRANCH MANAGER JAS
CHIEF ENG/ARCH EJA
FP ENGINEER DSN

DEPARTMENT OF THE NAVY
NAVAL FACILITIES ENGINEERING SYSTEMS COMMAND
DC CORE
MCAS BEAUFORT
NAVAL FACILITIES ENGINEERING SYSTEMS COMMAND - MID-ATLANTIC NORFOLK, VA
BEAUFORT, SC
P-475 AIRCRAFT MAINTENANCE HANGAR - VOLUME 1 (BASE BID WITH OPTIONS)
HANGAR - TELECOMMUNICATION SITE DETAILS

SCALE: SCALE: NTS
EPROJECT NO.: 1363603
CONSTR. CONTR. NO.
NAVFAC DRAWING NO. 12859408
SHEET 236 OF 1412
TS504
DRAWFORM REVISION: 25 AUGUST 2020

Autodesk Docs://20042 MFA1 502 F35 Maintenance Hangar/20042 F35 maint hangar LV-R17D24.rvt
11/5/2024 4:33:10 PM

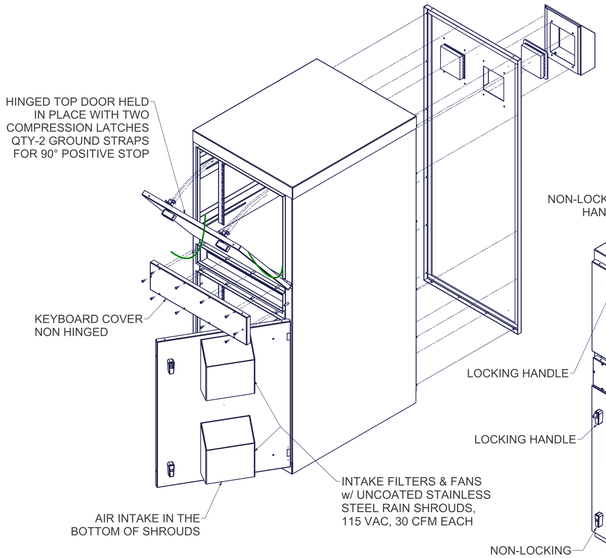

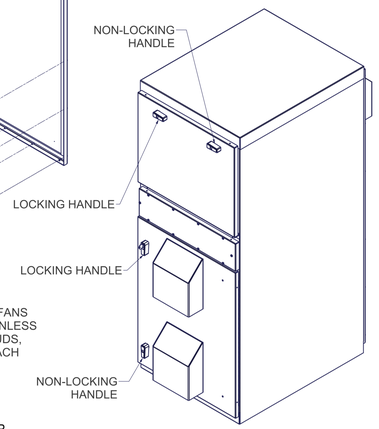

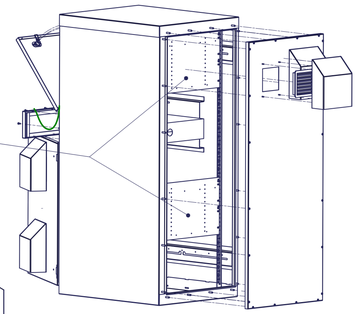

REAR ISO VIEW

DC#08044 SPECIFICATIONS:
1) 60"H x 24"W x 30"D NEMA 4X CUSTOM ENCLOSURE
2) STAINLESS STEEL MATERIAL AND EXTERNAL HARDWARE
3) TEXTURE POWDER COAT #RAL 7035 COLOR
4) SOLID SCREW ON REAR COVER WITH TWO EXHAUST FILTERS
5) SOLID RIGHT-HAND HINGED BOTTOM FRONT DOOR WITH INTAKE FANS AND FILTERS AND COMPRESSION LATCHES
6) SOLID BOTTOM HINGED TOP FRONT DOOR WITH COMPRESSION LATCHES, GROUND STRAPS (2) FOR 90° STOP.
7) SOLID SCREW ON COVER FOR KEYBOARD COMPARTMENT
8) FULL HEIGHT REAR 19" EIA MOUNTING RAILS, 3/8" SQ. HOLE - 31 RMU
9) SECTIONAL FRONT 19" EIA MOUNTING RAILS, 3/8" SQ. HOLE, 10 RMU IN TOP, 17 RMU IN BOTTOM
10) MIDDLE SECTION TO HAVE SLIDE OUT KEYBOARD w/19" TRAVEL
11) INTERNAL RACK MOUNTING HARDWARE TO BE STANDARD ZINC PLATED, 6mm THREADS (QTY. 50 SCREWS & CAGE NUTS PROVIDED)
12) QTY-2 : #WS22 ; 66-110 BLOCK MTG PANELS INSTALLED ON REAR RAILS.

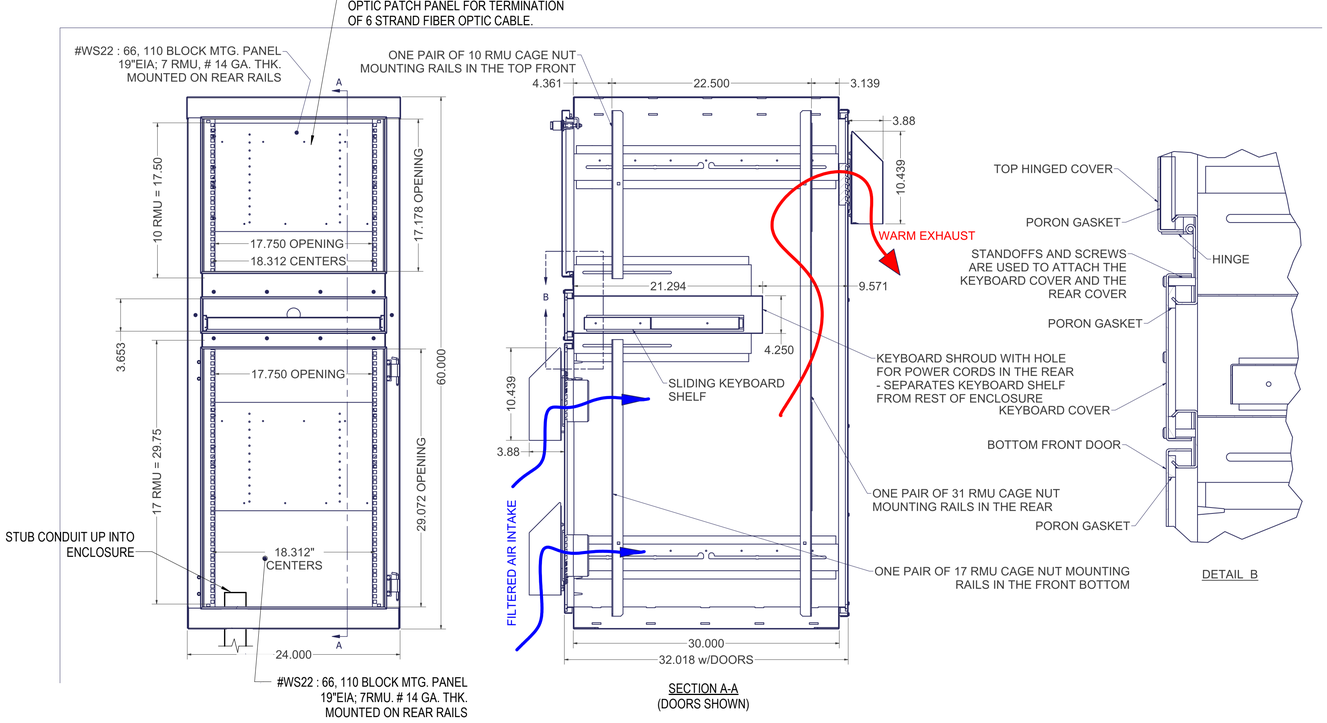

SECTION A-A
(DOORS SHOWN)

DETAIL B

A1 TELECOMMUNICATIONS APRON ENCLOSURE

NOT TO SCALE

NOTE:
IF THIS DRAWING IS LESS THAN 34" X 22"
IT IS A REDUCED SIZE DRAWING

NO.	DESCRIPTION	DATE	APPR
1	MOD P00005	05/2023	
2	MOD P00006 AND MOD P00007	10/2025	

NAVFAC

REGISTERED COMMUNICATIONS DISTRIBUTION DESIGNER
Bicsi
DONALD R. SELLERS
REG. NO. 110645
EXPIRES 12-31-2028
RCDD

BAMFORTH ENGINEERS CONTRACTORS

AE INFO

APPROVED
FOR COMMANDER NAVFAC 11/21/2025

ACTIVITY
Approved by J. Scott Roberts, Asset Management Branch Head & Supervisory Facility Planner, PWD Beaufort, SC via email.

SATISFACTORY TO DATE	12/15/2022
DES DRS / DRW MES / CHK KLM	
PM/DM	KTB / RLH
BRANCH MANAGER	JAS
CHIEF ENG/ARCH	EJA
FP ENGINEER	DSN

DEPARTMENT OF THE NAVY
NAVAL FACILITIES ENGINEERING SYSTEMS COMMAND
DC CORE:
NAVAL FACILITIES ENGINEERING SYSTEMS COMMAND ~ MID-ATLANTIC
NORFOLK, VA
MCAS BEAUFORT
BEAUFORT, SC
P-475 AIRCRAFT MAINTENANCE HANGAR - VOLUME 1 (BASE BID WITH OPTIONS)
HANGAR - TELECOMMUNICATIONS SITE DETAILS

SCALE:	SCALE: NTS
EPROJECT NO.:	1363603
CONSTR. CONTR. NO.	
NAVFAC DRAWING NO.	12859409
SHEET	237 OF 1412

TS505

DRAWFORM REVISION: 25 AUGUST 2020

Autodesk Docs://2042 NAVFAC 332 FSI Maintenance Hangar/2042 FSI maint Hangar LVA RVT2024.rvt
11/3/2024 4:43:20 PM

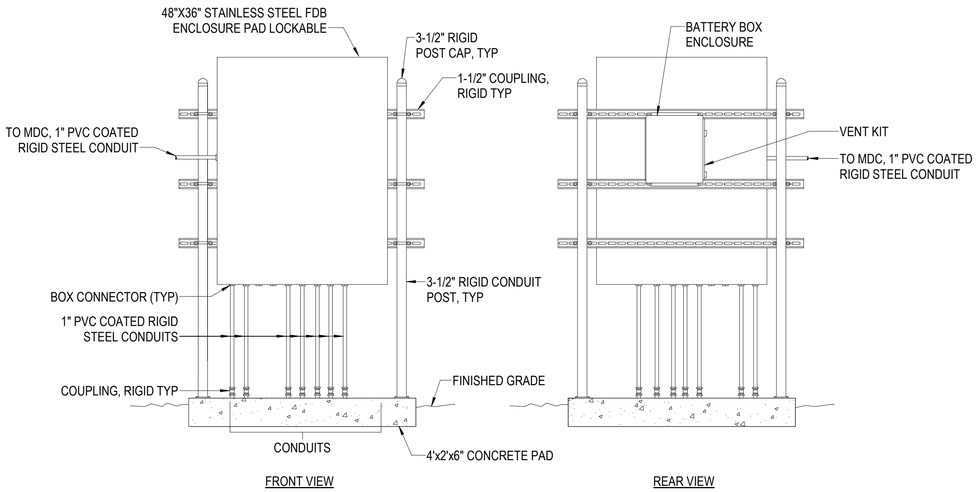

C1 FDB AND POWER SUPPLY MOUNTING
NOT TO SCALE

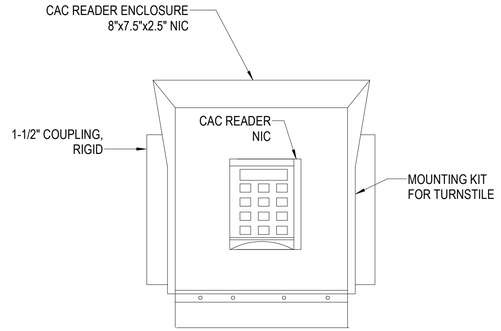

C3 CAC READER ENCLOSURE
NOT TO SCALE

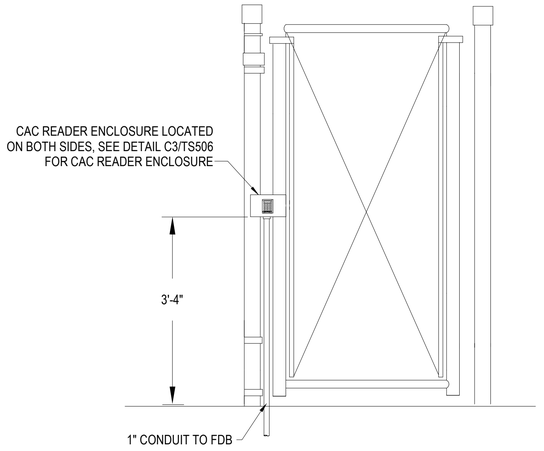

C4 PEDESTRAIN GATE ELEVATION
NOT TO SCALE

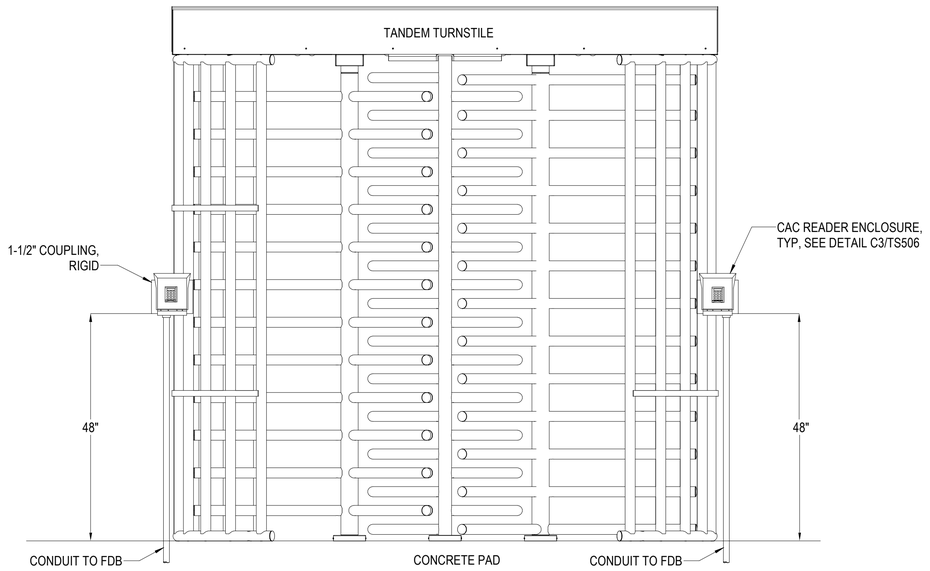

A1 TANDEM TURNSTILE
NOT TO SCALE

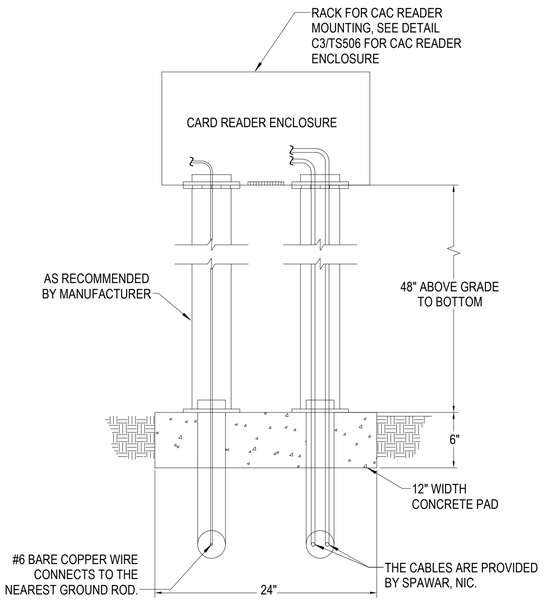

A3 CAC READER FOR VEHICLE GATES
NOT TO SCALE

NOTE:
IF THIS DRAWING IS LESS THAN 34" X 22"
IT IS A REDUCED SIZE DRAWING

SYM	DESCRIPTION	DATE	APPR
1	MOD P00005	05/2023	
2	MOD P00006 AND MOD P00007	10/2025	

NAVFAC

REGISTERED COMMUNICATIONS DISTRIBUTION DESIGNER
Bicsi
DONALD R SELLERS
REG. NO. 110645
EXPIRES 12-31-2028
RCDD
SEAL

BAMFORTH
ENGINEERS + SURVEYORS
AE INFO

APPROVED
FOR COMMANDER NAVFAC 11/21/2025
ACTIVITY
Approved by J. Scott Roberts, Asset Management Branch Head & Supervisory Facility Planner, PWD Beaufort, SC via email.

SATISFACTORY TO DATE	12/15/2022
DES DRS / DRW MES / CHK	KLM
PM/DM	KTB / RLH
BRANCH MANAGER	JAS
CHIEF ENG/ARCH	EJA
FP ENGINEER	DSN

DEPARTMENT OF THE NAVY
NAVAL FACILITIES ENGINEERING SYSTEMS COMMAND
NAVAL FACILITIES ENGINEERING SYSTEMS COMMAND ~ MID-ATLANTIC
NORFOLK, VA
DC CORE
MCAS BEAUFORT
BEAUFORT, SC
P-475 AIRCRAFT MAINTENANCE HANGAR - VOLUME 1 (BASE BID WITH OPTIONS)
HANGAR - TELECOMMUNICATIONS SITE DETAILS

SCALE:	SCALE : NTS
EPROJECT NO.:	1363603
CONSTR. CONTR. NO.	
NAVFAC DRAWING NO.	12859410
SHEET	238 OF 1412

TS506

DRAWFORM REVISION: 25 AUGUST 2020

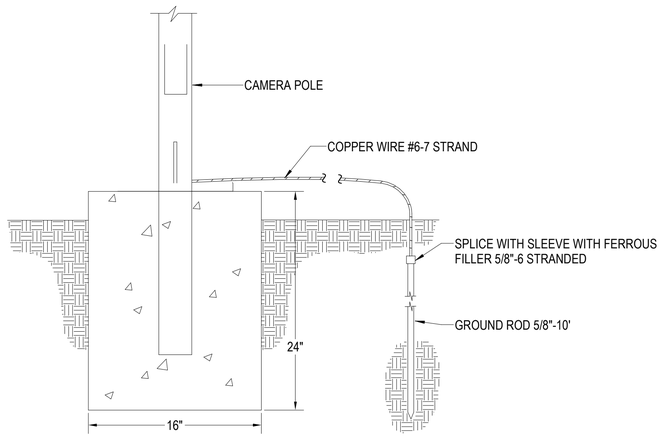

C1 CAMERA POLE - GROUNDING
NOT TO SCALE

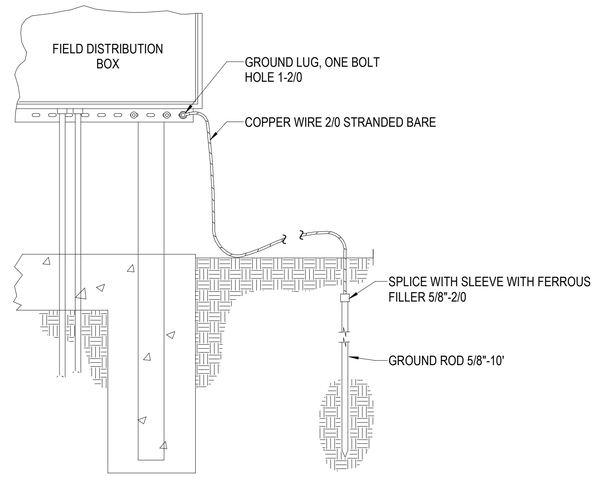

C2 FIELD DISTRIBUTION BOX - GROUNDING
NOT TO SCALE

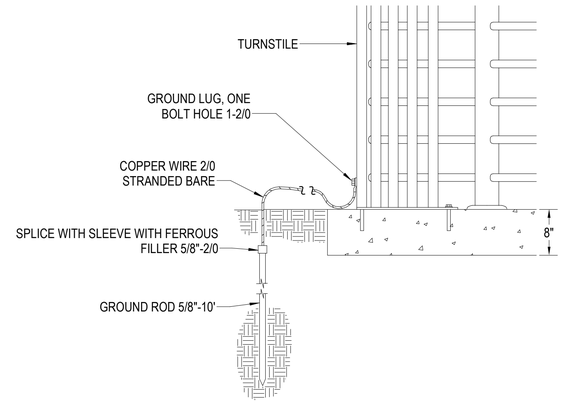

C4 TURNSTILE - GROUNDING
NOT TO SCALE

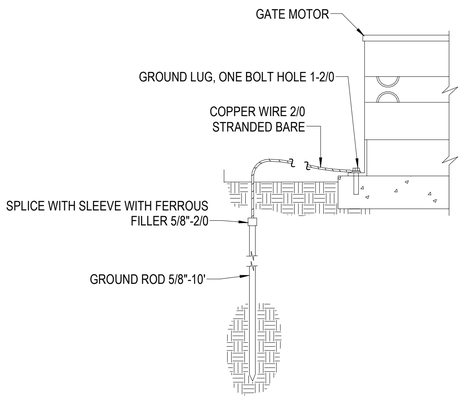

B1 VEHICLE GATE MOTOR - GROUNDING
NOT TO SCALE

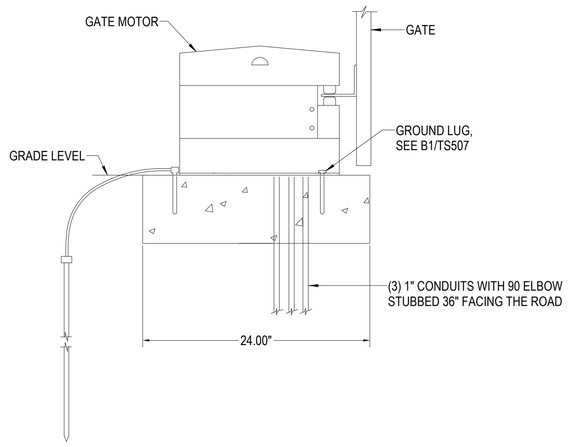

B2 VEHICLE GATE SIDE VIEW CONDUITS
NOT TO SCALE

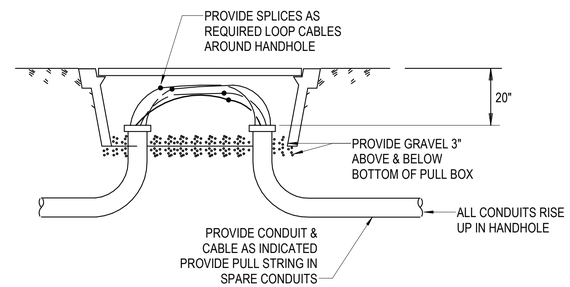

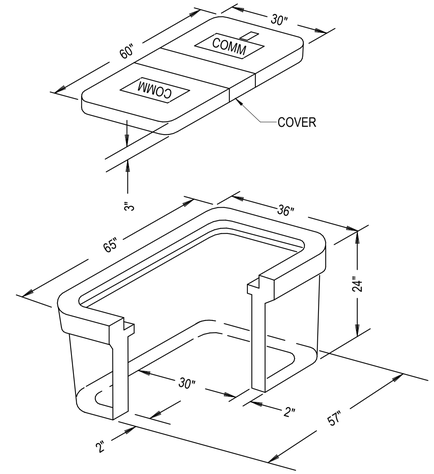

HANDHOLE NOTES:
1. BOX SHALL BE COMPOSED OF REINFORCED PLASTIC MORTAR AND BE DESIGNED AND TESTED TO MEET ASTM D-635 FLAMMABILITY TEST AND A SERVICE LOAD: 15,000 LB OVER ANY 10" x 10" AREA. COVER TO BE MARKED "COMMUNICATION".
2. SPLICES SHALL BE PROVIDED PER T503 DETAIL 2.

B4 RESTRICTED AREA SECURITY FENCE COMMUNICATIONS HANDHOLE
NOT TO SCALE

NOTE:
IF THIS DRAWING IS LESS THAN 34" X 22"
IT IS A REDUCED SIZE DRAWING

SYM	DESCRIPTION	DATE	APPR
1	MOD P00005	05/2023	
2	MOD P00006 AND MOD P00007	10/2025	

NAVFAC

REGISTERED COMMUNICATIONS DISTRIBUTION DESIGNER
Bicsi
DONALD R SELLERS
REG. NO. 110645
EXPIRES 12-31-2028
RCDD
SEAL

BAMFORTH
ENGINEERS + SURVEYORS
A/E INFO

APPROVED
FOR COMMANDER NAVFAC 11/21/2025
ACTIVITY
Approved by J. Scott Roberts, Asset Management Branch Head & Supervisory Facility Planner, PWD Beaufort, SC via email.

SATISFACTORY TO DATE	12/15/2022
DES DRS / DRW MES / CHK KLM	
PM/DM	KTB / RLH
BRANCH MANAGER	JAS
CHIEF ENG/ARCH	EJA
FP ENGINEER	DSN

DEPARTMENT OF THE NAVY
NAVAL FACILITIES ENGINEERING SYSTEMS COMMAND
NAVAL FACILITIES ENGINEERING SYSTEMS COMMAND ~ MID-ATLANTIC
NORFOLK, VA
DC CORE
MCAS BEAUFORT
BEAUFORT, SC
P-475 AIRCRAFT MAINTENANCE HANGAR - VOLUME 1 (BASE BID WITH OPTIONS)
HANGAR - TELECOMMUNICATIONS SITE DETAILS

SCALE:	As indicated
EPROJECT NO.:	1363603
CONSTR. CONTR. NO.	
NAVFAC DRAWING NO.	12859411
SHEET	239 OF 1412

TS507

DRAWFORM REVISION: 25 AUGUST 2020

Autodesk Docs://20242 VMFAT 502 F35 Maintenance Hangar/20242 F35 maint Hangar LV-RV72024.rvt
11/5/2025 4:33:55 PM

HANGAR
COMM. RM. 145
BEP
BEP
SEE DRAWING TT601 FOR ADDITIONAL REQUIREMENTS FOR TERMINATION OF OSP CABLES
OSF
COMM. RM. O106
BEP
BEP
SEE DRAWING TT601 FOR ADDITIONAL REQUIREMENTS FOR TERMINATION OF OSP CABLES
INCLUDE THIS WORK ONLY IF OSF OPTION IS AWARDED.
BLDG P-464 (BLDG 3090)
72 STRANDS SM FIBER OPTIC CABLE
300 PAIR COPPER
CHH2A14A
SPLICE TO EXISTING 300 PAIR COPPER CABLE AS DIRECTED BY THE CONTRACTING OFFICER.
(2) 24 STRAND FIBER OPTIC CABLES
(2) 25 PAIR COPPER CABLES
CMH2G6 / TR 145 - FSM.72
CMH2G6 / TR 145 - C.200
TR 145 / TR O106 - FSM.24
TR 145 / TR O106 - C.25
TR 145 / TR O106 - FSM.24
TR 145 / TR O106 - C.25
CMH2G7
CHH2G7A
CHH2G7B
TR 145 / TR O106 - FSM.24
TR 145 / TR O106 - C.25
SPLICE 200 PAIR COPPER CABLE TO 2100 PAIR COPPER CABLE AS DIRECTED BY THE CONTRACTING OFFICER.
INCREASE COPPER CABLE TO C.2100 IF THE BUILDING 3060 INTERCONNECTION OPTION IS AWARDED
SPLICE 72 STRAND SM FIBER OPTIC CABLE TO (4)X144 SINGLE MODE FIBER OPTIC CABLE AS DIRECTED BY THE CONTRACTING OFFICER.
CMH2G6 / TR 145 - FSM.72
CMH2G6 / TR 145 - C.200
CMH2G6
72 STRAND SM FIBER OPTIC CABLE
CHH2A14A / CMH2A14 - C.200
CMH2F / CMH2A14 - C.200
CMH2F / B 3060 - FSM.72
LONGSTAFF AVE
CMH2G4
CMH2G5
CMH2A17
CMH2A16
CMH2A15
DRAYTON AVE
DRAYTON AVE
KIMES AVE
CMH2F / CMH2A14 - C.200
CMH2F / B 3060 - FSM.72
CMH2F / CMH2A14 - C.200
CMH2F / B 3060 - FSM.72
CMH2F / CMH2A14 - C.2100
CMH2F / B 3060 - FSM.(4)X144
CMH2F / CMH2A14 - C.2100
CMH2F / B 3060 - FSM.(4)X144
CMH2F / CMH2A14 - C.2100
CMH2F / B 3060 - FSM.(4)X144
INCREASE FIBER OPTIC CABLE TO FSM.(4)X144 IF THE BUILDING 3060 INTERCONNECTION OPTION IS AWARDED
INCLUDE THIS WORK ONLY IF BUILDING 3060 INTERCONNECTION OPTION IS AWARDED.
CMH2F / CMH2A14 - C.2100
CMH2F / B 3060 - FSM.(4)X144
2ND STREET
CMH2G3
CMH2F / CMH2A14 - C.200
CMH2F / B 3060 - FSM.72
INCREASE COPPER CABLE TO C.2100 IF THE BUILDING 3060 INTERCONNECTION OPTION IS AWARDED
INCREASE FIBER OPTIC CABLE TO FSM.(4)X144 IF THE BUILDING 3060 INTERCONNECTION OPTION IS AWARDED
CMH2G2
CMH2A14
HH-7-D-1
MAYBERRY STREET
CAP AND COIL EXISTING CABLE IN MH-7D
96 SM (727-614
48 SM (727-74)
MH-7D
SPLICE TO EXISTING 900 AND 1200 PAIR COPPER CABLES AS DIRECTED BY THE CONTRACTING OFFICER
72 STRAND SM FIBER OPTIC CABLE
900 PAIR COPPER
1200 PAIR COPPER
JUNG AVE
CMH2F / CMH2A14 - C.200
CMH2F / B 3060 - FSM.72
INCREASE COPPER CABLE TO C.2100 IF THE BUILDING 3060 INTERCONNECTION OPTION IS AWARDED
INCREASE FIBER OPTIC CABLE TO FSM.(4)X144 IF THE BUILDING 3060 INTERCONNECTION OPTION IS AWARDED
CMH2G1
CMH2F / B 3060 - FSM.(4)X144
CMH2A13
CMH2F / B 3060 - FSM.(4)X144
CMH2A12
ITAMI AVE
CMH2F / CMH2A14 - C.200
CMH2F / B 3060 - FSM.72
INCREASE COPPER CABLE TO C.2100 IF THE BUILDING 3060 INTERCONNECTION OPTION IS AWARDED
INCREASE FIBER OPTIC CABLE TO FSM.(4)X144 IF THE BUILDING 3060 INTERCONNECTION OPTION IS AWARDED
CMH2F / B 3060 - FSM.(4)X144
CMH2G
CMH2F / CMH2A14 - C.200
CMH2F / B 3060 - FSM.72
INCREASE COPPER CABLE TO C.2100 IF THE BUILDING 3060 INTERCONNECTION OPTION IS AWARDED
INCREASE FIBER OPTIC CABLE TO FSM.(4)X144 IF THE BUILDING 3060 INTERCONNECTION OPTION IS AWARDED
SPLICE TO EXISTING (4)X144 EXISTING SINGLE MODE FIBER OPTIC CABLE AS DIRECTED BY THE CONTRACTING OFFICER.
SPLICE TO EXISTING COPPER CABLE USING EXISTING SPLICE CLOSURE AS DIRECTED BY THE CONTRACTING OFFICER
SPLICE TO EXISTING (4)X144 EXISTING SINGLE MODE FIBER OPTIC CABLE AS DIRECTED BY THE CONTRACTING OFFICER.
CMH2A11
BLDG 3060
LIGHTNING AVE
CMH2F

NOTES:
A. PROVIDE (2) 3-CELL FIBER MESH INNERDUCTS IN EACH CONDUIT USED FOR PULLING FIBER OPTIC CABLES. INSTALL FIBER OPTIC CABLING IN FABRIC MESH INNERDUCT.
B. COORDINATE PLACEMENT OF COPPER AND FIBER OPTIC CABLES IN THE DUCT BANK WITH THE CONTRACTING OFFICER.

NOTE:
IF THIS DRAWING IS LESS THAN 34" X 22"
IT IS A REDUCED SIZE DRAWING

STM	DESCRIPTION	DATE	APPR
1	MOD P00005	05/2023	
2	MOD P00006 AND MOD P00007	10/2025	

NAVFAC

REGISTERED COMMUNICATIONS DISTRIBUTION DESIGNER
Bicsi
DONALD R. SELLERS
REG. NO. 110645
EXPIRES 12-31-2028
RCDD

BAMFORTH ENGINEERS + SURVEYORS

AE INFO

APPROVED
FOR COMMANDER NAVFAC
ACTIVITY
Approved by J. Scott Roberts, Asset Management Branch Head & Supervisory Facility Planner, PWD Beaufort, SC via email.
SATISFACTORY TO DATE 12/15/2022
DES DRS | DRW MES | CHK KLM
PM/DM KTB / RLH
BRANCH MANAGER JAS
CHIEF ENG/ARCH EJA
FP ENGINEER DSN

NAVAL FACILITIES ENGINEERING SYSTEMS COMMAND
NAVAL FACILITIES ENGINEERING SYSTEMS COMMAND – MID-ATLANTIC
NORFOLK, VA
DEPARTMENT OF THE NAVY
NAVAL FACILITIES ENGINEERING SYSTEMS COMMAND – MID-ATLANTIC
DO-CORE
MCAS BEAUFORT
BEAUFORT, SC
P-475 AIRCRAFT MAINTENANCE HANGAR - VOLUME 1 (BASE BID WITH OPTIONS)
HANGAR - TELECOMMUNICATIONS OSP RISER DIAGRAM

SCALE: SCALE: NTS
EP/PROJECT NO.: 1363603
CONSTR. CONTR. NO.
NAVFAC DRAWING NO. 12859412
SHEET 240 OF 1412
TS601
DRAWFORM REVISION: 25 AUGUST 2020

Autodesk Docs://20042 \MFAT 501 F36 Maintenance Hangar/20042 F36 insert Hangar LV-R-T2024.rvt
11/5/2024 4:34:09 PM