SITE LAYOUT CONTROL POINTS

DESCRIPTION	NORTHING	EASTING
PT1	230979.24	2084119.11
PT2	231256.36	2084365.79
PT3	231288.21	2084486.52
PT4	231218.83	2084564.45
PT5	230955.44	2084505.21
PT6	231134.70	2084664.79
PT7	231293.27	2084731.86
PT8	231312.68	2084715.67
PT9	231309.89	2084713.19
PT10	231279.05	2084642.89
PT11	231398.49	2084508.72
PT12	231354.38	2084558.28
PT13	231321.96	2084594.69
PT14	231308.61	2084609.69
PT15	231297.53	2084622.14
PT16	231250.54	2084652.32
PT17	230979.02	2084418.65
PT18	230952.13	2084394.72
PT19	230872.46	2084323.79
PT20	230931.03	2084409.40
PT21	230966.88	2084441.32
PT22	231214.63	2084661.86
PT23	231214.23	2084699.55
PT24	231207.40	2084705.37
PT25	231150.79	2084764.52
PT26	231120.71	2084823.49
PT27	231163.41	2084625.63
PT28	231160.75	2084628.62
PT29	231258.05	2084709.88
PT30	231255.39	2084712.87
PT31	231067.63	2084856.84
PT32	230892.58	2084757.36
PT33	230651.76	2084625.94
PT34	230723.01	2084643.08
PT35	230734.96	2084653.72
PT36	230825.42	2084528.03
PT37	230837.38	2084538.67
PT38	230859.40	2084489.87
PT39	230871.35	2084500.51
PT40	231112.41	2084816.38

SITE LAYOUT CONTROL POINTS

DESCRIPTION	NORTHING	EASTING
PT41	231090.97	2084857.53
PT42	231078.72	2084850.56
PT43	231073.04	2084847.33
PT44	231067.17	2084815.28
PT45	231151.90	2084749.79
PT46	231147.77	2084746.96
PT47	231190.80	2084704.92
PT48	231187.06	2084701.59
PT49	231209.36	2084691.97
PT50	231212.68	2084688.24
PT51	230718.17	2084650.50
PT52	230715.79	2084654.90
PT53	230663.88	2084621.15
PT54	230661.50	2084625.55
PT55	230698.50	2084623.36
PT56	230742.53	2084544.61
PT57	230856.28	2084517.43
PT58	230795.97	2084600.22
PT59	230816.21	2084618.24
PT60	230741.84	2084661.03
PT61	230926.77	2084761.03
PT62	230950.80	2084734.03
PT63	230840.08	2084635.47
PT64	230845.54	2084484.38
PT65	230912.59	2084409.05
PT66	230723.26	2084527.95
PT67	230802.32	2084532.93
PT68	230714.08	2084632.06
PT69	230900.36	2084064.85
PT70	230813.57	2084203.41
PT71	230813.80	2084233.41
PT72	230948.28	2084383.25
PT73	230955.63	2084381.76
PT74	230797.45	2084625.64
PT74	230991.23	2084421.49
PT75	230770.41	2084656.01
PT75	230956.64	2084366.64
PT76	230828.11	2084648.92
PT76	231006.50	2084404.33
PT77	230925.38	2084735.51

SITE LAYOUT CONTROL POINTS

DESCRIPTION	NORTHING	EASTING
PT77	230951.64	2084114.28
PT77	230860.39	2084177.98
PT78	230919.40	2084742.23
PT78	230847.75	2084192.17
PT79	230803.39	2084152.68
PT80	230803.55	2084174.47
PT81	231145.52	2084724.07
PT82	231164.80	2084702.41
PT83	231158.71	2084716.39

SYM	DESCRIPTION	DATE	APPR
	MOD P00006 AND MOD P00007	10/2025	
	MOD P00005	05/2023	

NAVFAC

SOUTH CAROLINA PROFESSIONAL ENGINEER No. 23067 01/13/23 BAMFORTH

SEAL

BAMFORTH ENGINEERS + SURVEYORS

A/E INFO

APPROVED

FOR COMMANDER NAVFAC

ACTIVITY

Approved by J. Scott Roberts, Asset Management Branch Head & Supervisory Facility Planner, PWD Beaufort, SC via email.

SATISFACTORY TO DATE 12/15/2022

DES CAB | DRW CAD | CHK ALB

PM/DM KTB/RLH

BRANCH MANAGER DLB

CHIEF ENG/ARCH EJA

FIRE PROTECTION DSN

DEPARTMENT OF THE NAVY
NAVAL FACILITIES ENGINEERING SYSTEMS COMMAND
NAVAL FACILITIES ENGINEERING SYSTEMS COMMAND - MID-ATLANTIC
NORFOLK, VA

DC CODE

MCAS BEAUFORT

BEAUFORT, SC

P-475 AIRCRAFT MAINTENANCE HANGAR - VOLUME 1 (BASE BID WITH OPTIONS)

SITE LAYOUT CONTROL POINTS

SCALE: GRAPHIC

EPROJECT NO.: 1363603

CONSTR. CONTR. NO.

NAVFAC DRAWING NO.
12859235

SHEET 63 OF 1412

CS001

DRAWFORM REVISION: 25 AUGUST 2020

FILE NAME: K:\Jobs\200211\BJWSA 10-02-25\BIDC-P475--1363603--CS001.dwg LAYOUT NAME: CS001 PLOTTED: Thursday, November 06, 2025 - 2:16pm USER: mlw

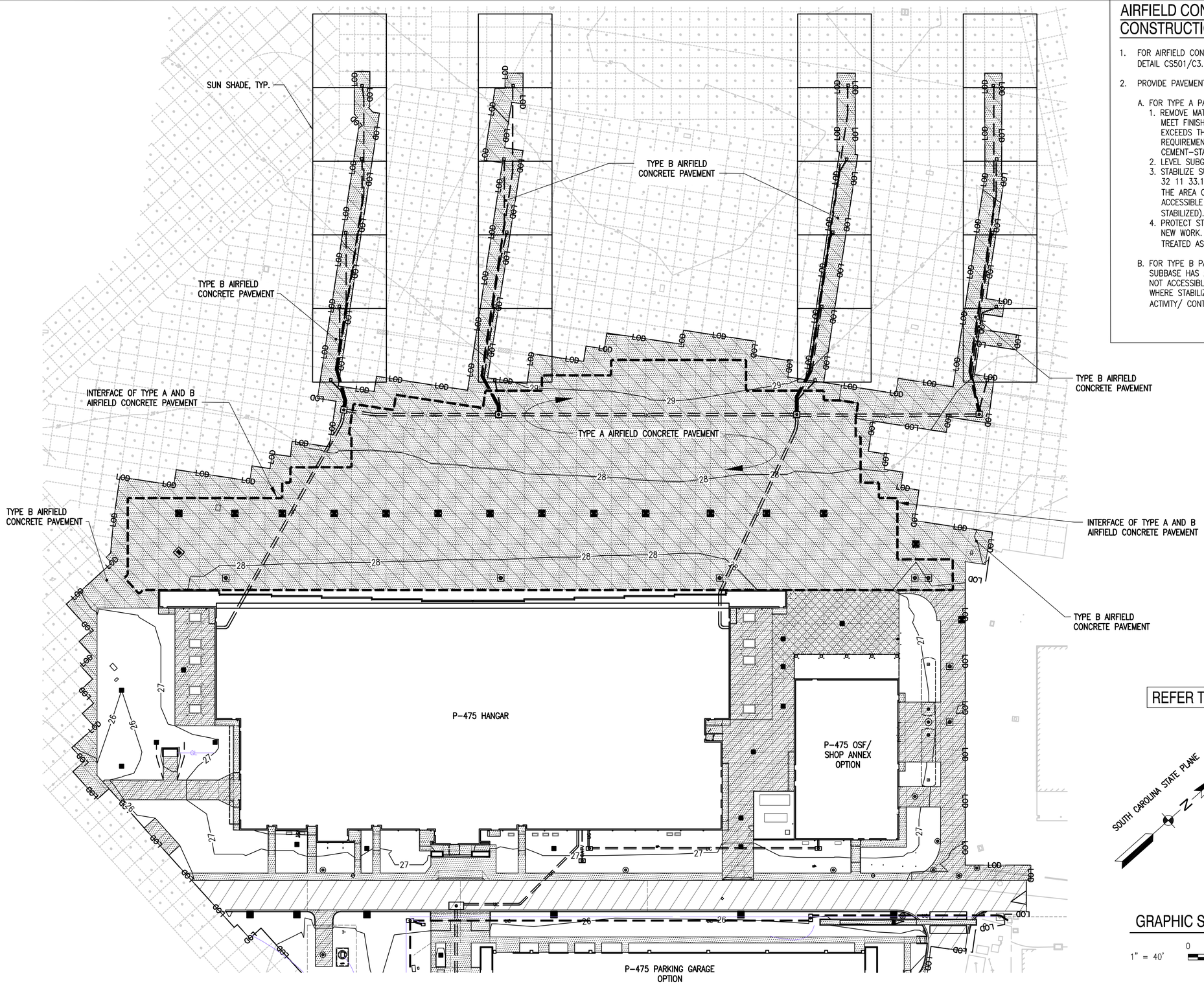

AIRFIELD CONCRETE PAVEMENT TYPE AND CONSTRUCTION SEQUENCE:

1. FOR AIRFIELD CONCRETE PAVEMENT TYPE A AND TYPE B REFER TO DETAIL CS501/C3.
2. PROVIDE PAVEMENT TYPE AS FOLLOWS –
   A. FOR TYPE A PAVEMENT –
      1. REMOVE MATERIAL OR PROVIDE MATERIAL AS REQUIRED TO MEET FINISHED SUBGRADE ELEVATION. IF MATERIAL REQUIRED EXCEEDS THAT AVAILABLE ON–SITE, PROVIDE MATERIAL MEETING REQUIREMENTS SPECIFIED IN SECTION 32 11 33.13 PORTLAND CEMENT–STABILIZED SUBBASE COURSE.
      2. LEVEL SUBGRADE.
      3. STABILIZE SUBGRADE MATERIAL IN ACCORDANCE WITH SECTION 32 11 33.13 PORTLAND CEMENT–STABILIZED SUBBASE COURSE. THE AREA OF STABILIZATION IS TO BE MAXIMIZED (ALL AREAS ACCESSIBLE BY STABILIZATION EQUIPMENT MUST BE STABILIZED).
      4. PROTECT STABILIZED AREAS EXCEPT AS REQUIRED TO PROVIDE NEW WORK. SUBSEQUENTLY DISTURBED AREAS MUST BE TREATED AS TYPE B PAVEMENT, AT CONTRACTORS' EXPENSE.
   B. FOR TYPE B PAVEMENT– PROVIDE AFTER TYPE A PAVEMENT SUBBASE HAS ATTAINED FULL STRENGTH. PROVIDE FOR ALL AREAS NOT ACCESSIBLE BY STABILIZATION EQUIPMENT AND ALL AREAS WHERE STABILIZED SUBBASE IS DISTURBED BY CONSTRUCTION ACTIVITY/ CONTRACTOR.

REFER TO VOLUME 6 FOR BASE BID

GRAPHIC SCALE

1" = 40' 0 40' 80' 120' 160'

SYM	DESCRIPTION	DATE	APPR.
	MOD P00006 AND MOD P00007	10/2025	
	MOD P00005	05/2023	

NAVFAC

SOUTH CAROLINA PROFESSIONAL ENGINEER No. 23067 01/13/23 BAMFORTH

SEAL

BAMFORTH ENGINEERS + SURVEYORS

A/E INFO

APPROVED

FOR COMMANDER NAVFAC

ACTIVITY

Approved by J. Scott Roberts, Asset Management Branch Head & Supervisory Facility Planner, PWD Beaufort, SC via email.

SATISFACTORY TO DATE 12/15/2022

DES CAB	DRW CAD	CHK ALB
PM/DM	KTB/RLH
BRANCH MANAGER	DLB
CHIEF ENGIARCH	EJA
FIRE PROTECTION	DSN

DEPARTMENT OF THE NAVY
NAVAL FACILITIES ENGINEERING SYSTEMS COMMAND
NAVAL FACILITIES ENGINEERING SYSTEMS COMMAND - MID-ATLANTIC NORFOLK, VA
DC CODE
MCAS BEAUFORT
BEAUFORT, SC

P-475 AIRCRAFT MAINTENANCE HANGAR - VOLUME 1 (BASE BID WITH OPTIONS)

OVERALL AIRFIELD CONCRETE PAVEMENT CONSTRUCTION SEQUENCE PLAN

SCALE: GRAPHIC

EPROJECT NO.: 1363603

CONSTR. CONTR. NO.

NAVFAC DRAWING NO. 12859236

SHEET 64 OF 1412

CS002

DRAWFORM REVISION: 25 AUGUST 2020

FILE NAME: K:\Jobs\20021\BJMSA 10-02-25\BLDG-P475-1363603-CS002.dwg LAYOUT NAME: CS104 PLOTTED: Thursday, November 06, 2025 - 2:16pm USER: mtw

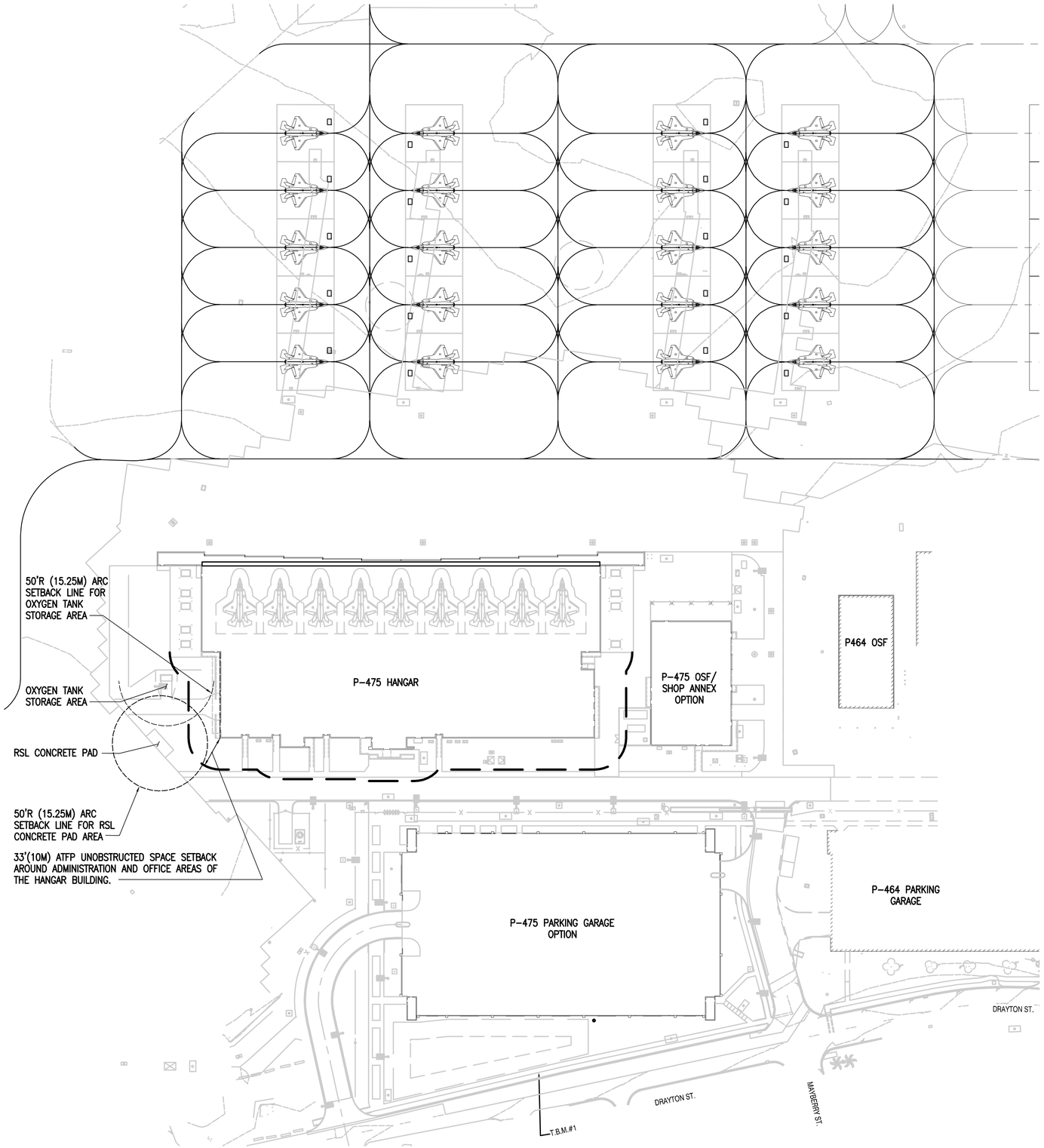

REFER TO VOLUME 6 FOR BASE BID

SOUTH CAROLINA STATE PLANE

N

NOTES:

1. THIS SHEET IS FOR ILLUSTRATIVE PURPOSES ONLY AND INDICATES THE APPLICABLE ANTITERROSIM (AT) / FORCE PROTECTION CRITERIA USED IN THE DESIGN.

GRAPHIC SCALE

1" = 60' 0 60' 120' 180' 240'

SYM	DESCRIPTION	DATE	APPR.
	MOD P00006 AND MOD P00007	10/2025	
	MOD P00005	05/2023	

NAVFAC

SOUTH CAROLINA No. 23067 01/13/23 ANTHONY L. BAMFORTH

SEAL

BAMFORTH ENGINEERS + SURVEYORS

A/E INFO:

APPROVED:

FOR COMMANDER NAVFAC

ACTIVITY

Approved by J. Scott Roberts, Asset Management Branch Head & Supervisory Facility Planner, PWD Beaufort, SC via email.

SATISFACTORY TO DATE 12/15/2022

DES	CAB	DRW CAD	CHK ALB
PM/DM	KTB/RLH		
BRANCH MANAGER	DLB		
CHIEF ENG/ARCH	EJA		
FIRE PROTECTION	DSN		

DEPARTMENT OF THE NAVY
NAVAL FACILITIES ENGINEERING SYSTEMS COMMAND
NAVAL FACILITIES ENGINEERING SYSTEMS COMMAND - MID-ATLANTIC
NORFOLK, VA
DC CORE
MCAS BEAUFORT
BEAUFORT, SC

P-475 AIRCRAFT MAINTENANCE HANGAR - VOLUME 1 (BASE BID WITH OPTIONS)

ATFP CRITERIA PLAN

SCALE: GRAPHIC
EPROJECT NO.: 1363603
CONSTR. CONTR. NO.
NAVFAC DRAWING NO. 12859237
SHEET 65 OF 1412

CS100

DRAWFORM REVISION: 25 AUGUST 2020

FILE NAME: K:\Jobs\20021\BAMSA 10-02-23\BLDG-P475-1363603-CS100.dwg LAYOUT NAME: CS100 PLOTTED: Thursday, November 06, 2025 - 2:16pm USER: mtw

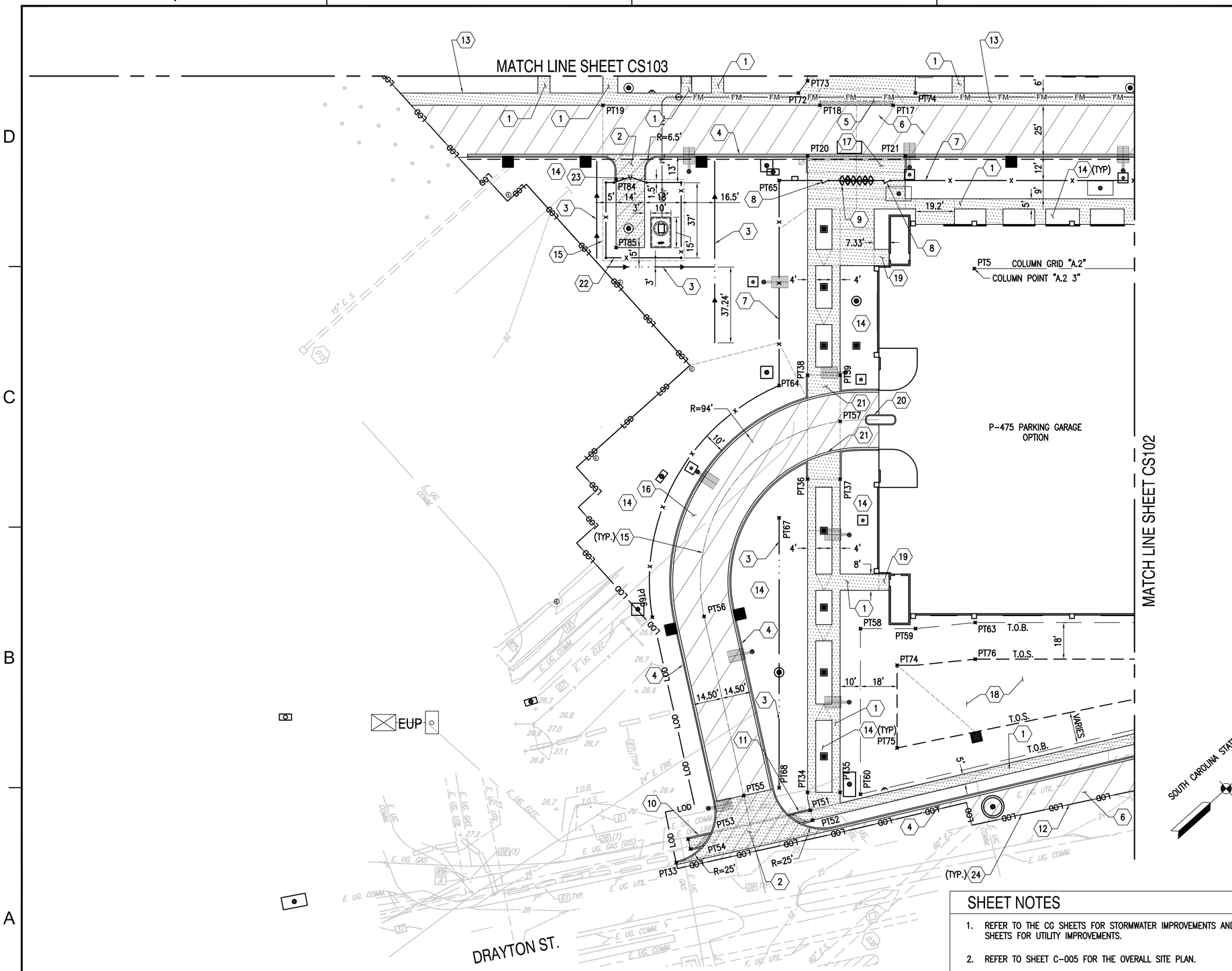

SITE IMPROVEMENT NOTES (THIS SHEET ONLY)

1. CONCRETE SIDEWALK (REFER TO DETAIL CS504/B4)
2. CONCRETE ENTRANCE (REFER TO DETAIL CS503/C4)
3. SWALE (REFER TO DETAIL CG505/A5)
4. CONCRETE CURB AND GUTTER (REFER TO DETAIL CS504/C1)
5. CONCRETE RAMP (TYPE 1) (REFER TO DETAIL CS505/C1)
6. BITUMINOUS PAVEMENT (REFER TO DETAIL CS501/A4)
7. RESTRICTED AREA SECURITY FENCE (REFER TO DETAIL CS506/C1)
8. SINGLE LEAF GATE (REFER TO DETAIL CS510/A1 & SHEET CS509)
9. DOUBLE TANDEM TURNSTILES (REFER TO DETAIL CS509/A2 & SHEET CS508)
10. CONCRETE RAMP (TYPE 2) (REFER TO DETAIL CS505/A1)
11. CONCRETE RAMP (TYPE 3) (REFER TO DETAIL CS505/C4)
12. BITUMINOUS PAVEMENT INTERFACE (REFER TO DETAIL CS501/B1)
13. TURNDOWN EDGE SIDEWALK (REFER TO DETAIL CS504/A3)
14. LANDSCAPE AREA (REFER TO LANDSCAPE PLANS)
15. GRADE BREAK
16. PARKING GARAGE ACCESS DRIVE PAVEMENT (REFER TO DETAIL CS501/C5)
17. CONCRETE RAMP (TYPE 4) (REFER TO DETAIL CS505/A4)
18. DRY DETENTION AREA (REFER TO CG SERIES SHEETS)
19. CONCRETE STOOP (REFER TO DETAIL CS504/A1)
20. CONCRETE MEDIAN (REFER TO DETAILS CS504/A4 AND PAE401/A3)
21. CONCRETE RAMP (TYPE 5) (REFER TO DETAIL CS505/B1)
22. CHAIN LINK FENCE (REFER TO DETAILS CS510/C1 & CU508/A1)
23. DOUBLE LEAF GATE (REFER TO DETAILS CS510/B3 & CU508/A1)
24. WHITE PAINT LINE MARKING. MATCH EXISTING PAVEMENT MARKING LAYOUT. ASSUME 4" THICKNESS (REFER TO DETAIL CP501/D3)

SHEET NOTES

1. REFER TO THE CG SHEETS FOR STORMWATER IMPROVEMENTS AND CU SHEETS FOR UTILITY IMPROVEMENTS.
2. REFER TO SHEET C-005 FOR THE OVERALL SITE PLAN.
3. REFER TO SHEET CS001 FOR SITE LAYOUT CONTROL POINTS (PT#).
4. REFER TO VOLUME 6 FOR BASE BID.
5. PRIOR TO CONSTRUCTION OF THE CONCRETE SIDEWALKS AND ADJACENT SLABS A JOINT PLAN MUST BE SUBMITTED FOR APPROVAL.

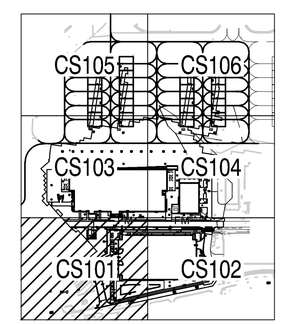

KEY PLAN

GRAPHIC SCALE

1" = 25' 0 25' 50' 75' 100'

SYM	DESCRIPTION	DATE	APPR
	MOD P00006 AND MOD P00007	10/2025	
	MOD P00005	05/2023	

NAVFAC

SOUTH CAROLINA No. 23067 01/13/23 PROFESSIONAL ENGINEER

SEAL

BAMFORTH ENGINEERS + SURVEYORS

A/E INFO

APPROVED

FOR COMMANDER NAVFAC

ACTIVITY

Approved by J. Scott Roberts, Asset Management Branch Head & Supervisory Facility Planner, PWD Beaufort, SC via email.

SATISFACTORY TO DATE 12/15/2022

DES CAB	DRW CAD CHK ALB
PM/DM	KTB/RLH
BRANCH MANAGER	DLB
CHIEF ENG/ARCH	EJA
FIRE PROTECTION	DSN

DEPARTMENT OF THE NAVY
NAVAL FACILITIES ENGINEERING SYSTEMS COMMAND
DC CODE
MCAS BEAUFORT

NAVAL FACILITIES ENGINEERING SYSTEMS COMMAND - MID-ATLANTIC NORFOLK VA

BEAUFORT, SC

P-475 AIRCRAFT MAINTENANCE HANGAR - VOLUME 1 (BASE BID WITH OPTIONS)

LAYOUT PLAN

SCALE: GRAPHIC

EPROJECT NO.: 1363603

CONSTR. CONTR. NO.

NAVFAC DRAWING NO. 12859238

SHEET 66 OF 1412

CS101

DRAWFORM REVISION: 25 AUGUST 2020

FILE NAME: K:\jobs\200211\BMSA 10-02-25\BLDG-P475-1363603-CS101.dwg LAYOUT NAME: CS101 PLOTTED: Tuesday, November 11, 2025 - 3:32pm USER: mlw

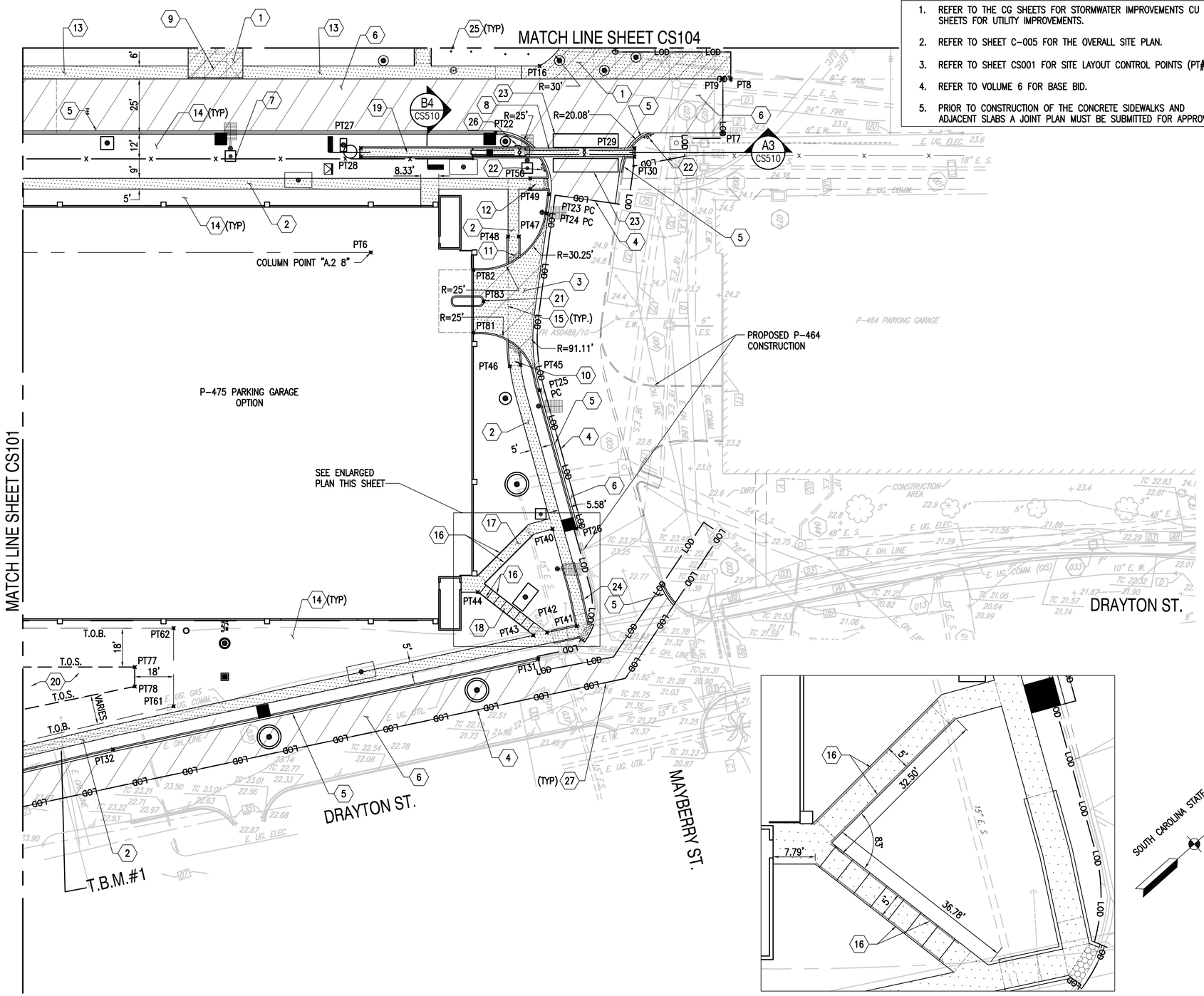

SHEET NOTES

1. REFER TO THE CG SHEETS FOR STORMWATER IMPROVEMENTS CU SHEETS FOR UTILITY IMPROVEMENTS.
2. REFER TO SHEET C-005 FOR THE OVERALL SITE PLAN.
3. REFER TO SHEET CS001 FOR SITE LAYOUT CONTROL POINTS (PT#).
4. REFER TO VOLUME 6 FOR BASE BID.
5. PRIOR TO CONSTRUCTION OF THE CONCRETE SIDEWALKS AND ADJACENT SLABS A JOINT PLAN MUST BE SUBMITTED FOR APPROVAL.

SITE IMPROVEMENT NOTES (THIS SHEET ONLY)

1. CONCRETE PAVEMENT (8-INCH THICK) (REFER TO DETAIL CS501/C1)
2. CONCRETE SIDEWALK (REFER TO DETAIL CS504/B4)
3. CONCRETE ENTRANCE (REFER TO DETAIL CS503/A4)
4. BITUMINOUS PAVEMENT INTERFACE (REFER TO DETAIL CS501/B1)
5. CONCRETE CURB AND GUTTER (REFER TO DETAIL CS504/C1)
6. BITUMINOUS PAVEMENT (REFER TO DETAIL CS501/A4)
7. RESTRICTED AREA SECURITY FENCE (REFER TO DETAIL CS506/C1)
8. CANTILEVER SLIDING GATE (REFER TO DETAIL CS510/C4)
9. CONCRETE RAMP (TYPE 1) (REFER TO DETAIL CS505/C1)
10. CONCRETE RAMP (TYPE 2) (REFER TO DETAIL CS505/A1)
11. CONCRETE RAMP (TYPE 3) (REFER TO DETAIL CS505/C4)
12. CONCRETE RAMP (TYPE 4) (REFER TO DETAIL CS505/A4)
13. TURNDOWN EDGE SIDEWALK (REFER TO DETAIL CS504/A3)
14. LANDSCAPE AREA (REFER TO LANDSCAPE PLANS)
15. GRADE BREAK
16. HANDRAIL (REFER TO LANDSCAPE PLANS)
17. CONCRETE HANDICAP RAMP (REFER TO ARCHITECTURAL PLANS)
18. CONCRETE STEP OR STEPS (REFER TO ARCHITECTURAL PLANS)
19. CONCRETE CURBED GATE CHANNEL (REFER TO SHEET CS510/B4 FOR SECTION)
20. DRY DETENTION AREA (REFER TO CG SERIES SHEETS)
21. CONCRETE ISLAND (REFER TO VOLUME 1, DETAIL CS504/A4 AND VOLUME 4, DETAIL PAE401/A3)
22. KEY PAD/ CARD READER (REFER TO DETAIL CS510/A5)
23. TRAFFIC DETECTOR LOOP (REFER TO DETAIL CS503/A1)
24. CONCRETE RAMP (TYPE 5) (REFER TO DETAIL CS505/B3)
25. BOLLARD (REFER TO VOLUME 3, DETAIL OAE561/C3)
26. GATE OPERATOR (REFER TO CS510/C4)
27. WHITE PAINT LINE MARKING. MATCH EXISTING PAVEMENT MARKING LAYOUT. ASSUME 4" THICKNESS (REFER TO DETAIL CP501/D3)

ENLARGED PLAN
1" = 10'

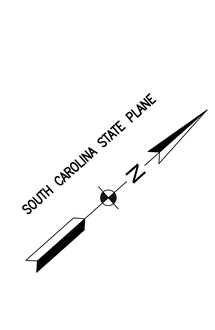

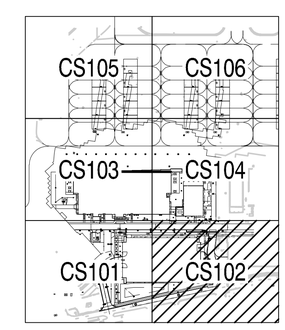

KEY PLAN

GRAPHIC SCALE

1" = 25' 0 25' 50' 75' 100'

1" = 10' 0 10' 20' 30' 40'

SYM	DESCRIPTION	DATE	APPR
MOD P00006 AND MOD P00007		10/2025	
MOD P00005		05/2023	

NAVFAC

SOUTH CAROLINA No. 23067 01/13/23 SEAL

BAMFORTH ENGINEERS + SURVEYORS

A/E INFO

APPROVED

FOR COMMANDER NAVFAC

ACTIVITY

Approved by J. Scott Roberts, Asset Management Branch Head & Supervisory Facility Planner, PWD Beaufort, SC via email.

SATISFACTORY TO DATE 12/15/2022

DES CAB	DRW CAD	CHK ALB	
PM/DM	KTB/RLH		
BRANCH MANAGER	DLB		
CHIEF ENG/ARCH	EJA		
FIRE PROTECTION	DSN		

DEPARTMENT OF THE NAVY
NAVAL FACILITIES ENGINEERING SYSTEMS COMMAND
DC CORE
NAVAL FACILITIES ENGINEERING SYSTEMS COMMAND - MID-ATLANTIC NORFOLK, VA
MCAS BEAUFORT
BEAUFORT, SC
P-475 AIRCRAFT MAINTENANCE HANGAR - VOLUME 1 (BASE BID WITH OPTIONS)
LAYOUT PLAN

SCALE: GRAPHIC
EPROJECT NO.: 1363603
CONSTR. CONTR. NO.
NAVFAC DRAWING NO. 12859239
SHEET 67 OF 1412

CS102

DRAWFORM REVISION: 25 AUGUST 2020

FILE NAME: K:\Jobs\20021\BJMSA 10-02-25\BLDG-P475-1363603-CS102.dwg LAYOUT NAME: CS102 PLOTTED: Tuesday, November 11, 2025 - 3:26pm USER: mtw

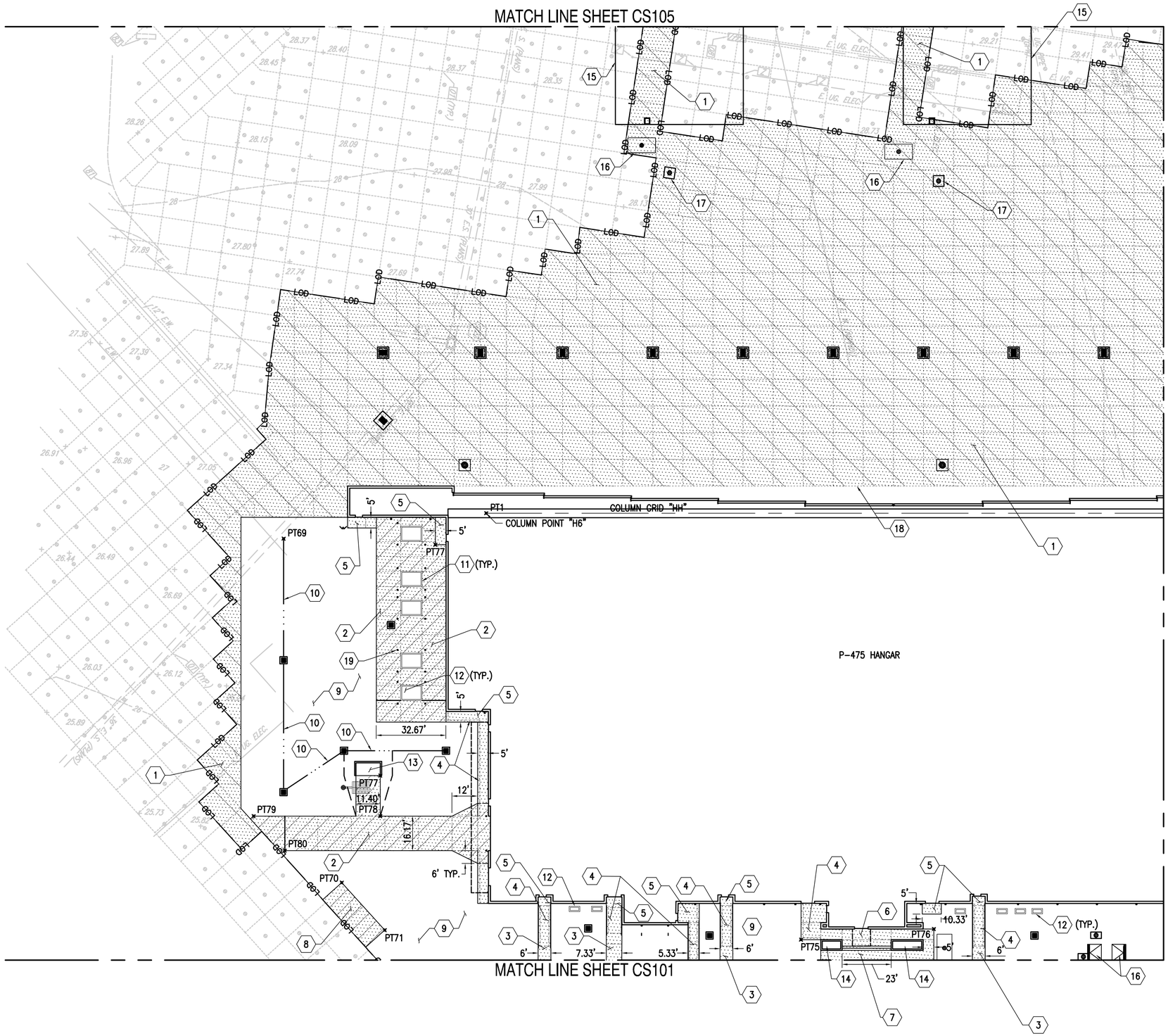

SOUTH CAROLINA STATE PLANE

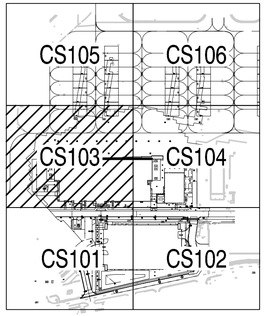

KEY PLAN

GRAPHIC SCALE

1" = 25' 0 25' 50' 75' 100'

SITE IMPROVEMENT NOTES (THIS SHEET ONLY)

1. CONCRETE AIRFIELD PAVEMENT (REFER TO DETAIL CS501/C3 AND SHEET CS002)
2. CONCRETE PAVEMENT (8-INCH THICK) (REFER TO DETAIL CS501/C1)
3. CONCRETE SIDEWALK (REFER TO DETAIL CS504/B4)
4. TURNED DOWN EDGE CONCRETE SIDEWALK (REFER TO DETAIL CS504/B1)
5. CONCRETE STOOP (REFER TO DETAIL CS504/A1)
6. CONCRETE HANDICAP RAMP (REFER TO ARCHITECTURAL PLANS)
7. CONCRETE STEP OR STEPS (REFER TO ARCHITECTURAL PLANS)
8. READY SERVICE LOCKER (RSL) CONCRETE PAD (REFER TO DETAIL CS504/B3)
9. LANDSCAPE AREA (REFER TO LANDSCAPE PLANS)
10. SWALE (REFER TO DETAIL CG505/A5)
11. CONCRETE HOUSEKEEPING PAD (REFER TO MECHANICAL PLANS)
12. MECHANICAL EQUIPMENT (REFER TO MECHANICAL PLANS)
13. OXYGEN TANK STORAGE AREA (REFER TO ARCHITECTURAL PLANS)
14. RAISED PLANTER (REFER TO DETAILS LP501/C4 AND SB505/D1)
15. SUN SHADE BOUNDARY
16. ELECTRICAL EQUIPMENT (REFER TO ELECTRICAL PLANS)
17. TELECOMMUNICATION EQUIPMENT (REFER TO TELECOMMUNICATION PLANS)
18. REFER TO ARCHITECTURAL PLANS FOR DOOR RAILS.
19. BOLLARD (REFER TO VOLUME 3 DETAIL OAE561/C3)

SHEET NOTES

1. REFER TO CS401 THROUGH CS403 FOR ENLARGED JOINT PLANS.
2. REFER TO THE CG SHEETS FOR STORMWATER IMPROVEMENTS AND CU SHEETS FOR UTILITY IMPROVEMENTS.
3. REFER TO SHEET C-005 FOR THE OVERALL SITE PLAN.
4. REFER TO SHEETS CP401 THROUGH CP404 FOR PAVEMENT MARKINGS.
5. REFER TO SHEET CS001 FOR SITE LAYOUT CONTROL POINTS (PT#).
6. PRIOR TO CONSTRUCTION OF THE CONCRETE SIDEWALKS AND ADJACENT SLABS A JOINT PLAN MUST BE SUBMITTED FOR APPROVAL.

SYM	DESCRIPTION	DATE	APPR.
	MOD P00006 AND MOD P00007	10/2025	
	MOD P00005	05/2023	

NAVFAC

SOUTH CAROLINA PROFESSIONAL ENGINEER No. 23067 01/13/23 BAMFORTH

SEAL

BAMFORTH ENGINEERS + SURVEYORS

A/E INFO

APPROVED

FOR COMMANDER NAVFAC

ACTIVITY

Approved by J. Scott Roberts, Asset Management Branch Head & Supervisory Facility Planner, PWD Beaufort, SC via email.

SATISFACTORY TO DATE	12/15/2022
DES CAB	DRW CAD CHK ALB
PM/DM	KTB/RLH
BRANCH MANAGER	DLB
CHIEF ENG/ARCH	EJA
FIRE PROTECTION	DSN

DEPARTMENT OF THE NAVY
NAVAL FACILITIES ENGINEERING SYSTEMS COMMAND
DC-CORE

NAVAL FACILITIES ENGINEERING SYSTEMS COMMAND - MID-ATLANTIC
NORFOLK, VA

MCAS BEAUFORT
BEAUFORT, SC

P-475 AIRCRAFT MAINTENANCE HANGAR - VOLUME 1 (BASE BID WITH OPTIONS)

LAYOUT PLAN

SCALE:	GRAPHIC
EPROJECT NO.:	1363603
CONSTR. CONTR. NO.	
NAVFAC DRAWING NO.	12859240
SHEET	68 OF 1412

CS103

DRAWFORM REVISION: 25 AUGUST 2020

FILE NAME: K:\jobs\20021\BUMSA 10-02-25\BLDG-P475-1363603-CS103.dwg LAYOUT NAME: CS103 PLOTTED: Thursday, November 06, 2025 - 2:17pm USER: mlw

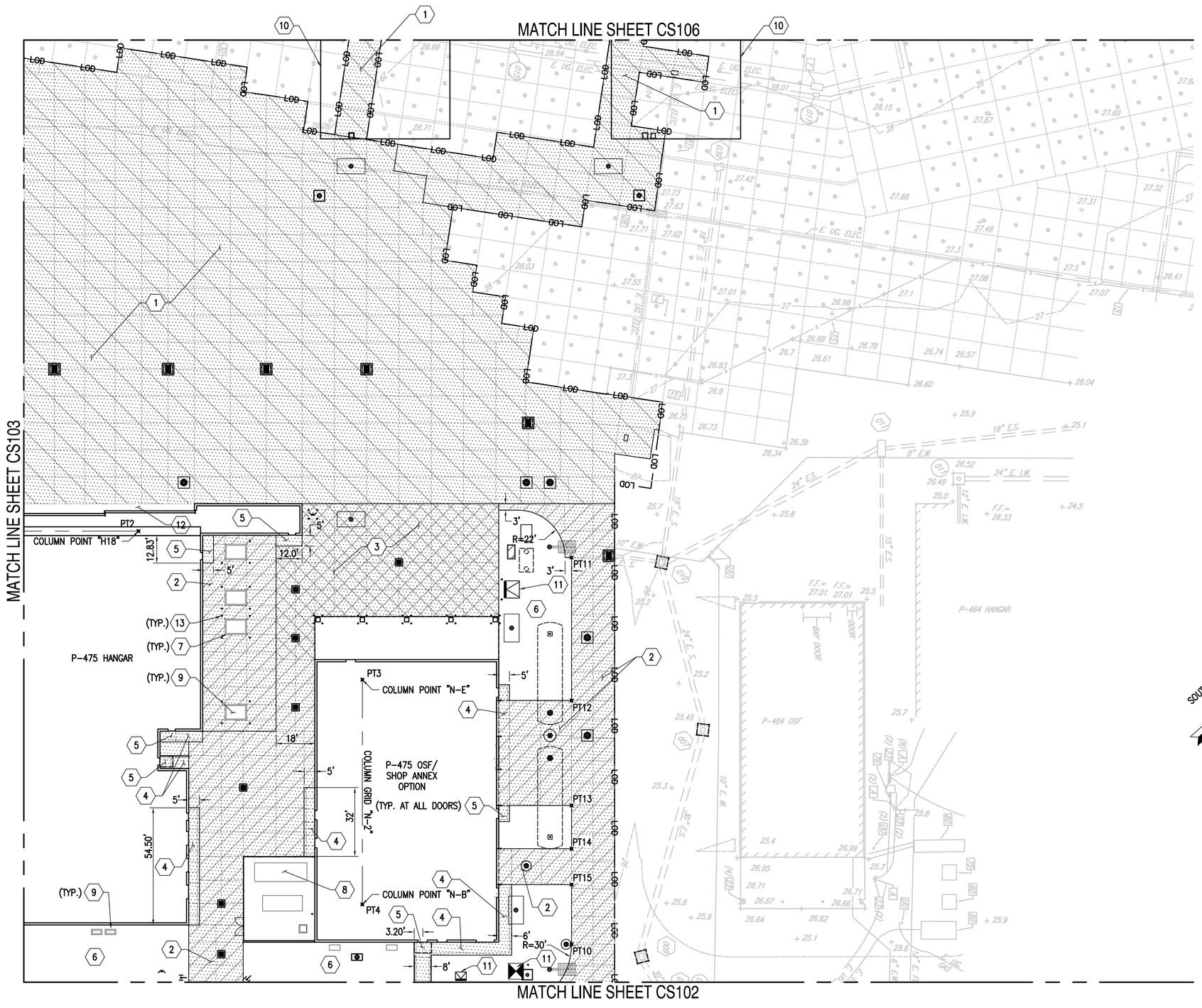

SITE IMPROVEMENT NOTES (THIS SHEET ONLY)

1. CONCRETE AIRFIELD PAVEMENT (REFER TO DETAIL CS501/C3 AND SHEET CS002)
2. CONCRETE PAVEMENT (8-INCH THICK) (REFER TO DETAIL CS501/C1)
3. HEAVY DUTY CONCRETE PAVEMENT (9-INCH THICK) (REFER TO DETAIL CS501/C2)
4. TURNED DOWN EDGE CONCRETE SIDEWALK (REFER TO DETAIL CS504/B1)
5. CONCRETE STOOP (REFER TO DETAIL CS504/A1)
6. LANDSCAPE AREA (REFER TO LANDSCAPE PLANS)
7. HOUSEKEEPING PAD (REFER TO MECHANICAL PLANS)
8. MECHANICAL YARD (REFER TO MECHANICAL PLANS)
9. MECHANICAL EQUIPMENT (REFER TO MECHANICAL PLANS)
10. SUN SHADE BOUNDARY
11. TRANSFORMER PAD (REFER TO ELECTRICAL PLANS)
12. REFER TO ARCHITECTURAL PLANS FOR DOOR RAILS
13. BOLLARD (REFER TO VOLUME 3, DETAIL OAE561/C3)

SHEET NOTES

1. REFER TO CS401 THROUGH CS403 FOR ENLARGED JOINT PLANS.
2. REFER TO THE CG SHEETS FOR STORMWATER IMPROVEMENTS AND CU SHEETS FOR UTILITY IMPROVEMENTS.
3. REFER TO SHEET C-005 FOR THE OVERALL SITE PLAN.
4. REFER TO SHEETS CP401 THROUGH CP404 FOR PAVEMENT MARKINGS.
5. REFER TO SHEET CS001 FOR SITE LAYOUT CONTROL POINTS (PT#).
6. REFER TO VOLUME 6 FOR BASE BID.

SOUTH CAROLINA STATE PLANE

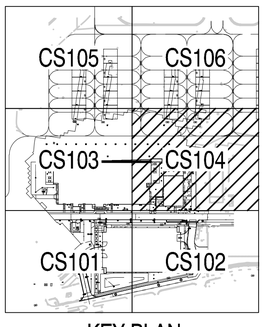

KEY PLAN

GRAPHIC SCALE

1" = 25' 0 25' 50' 75' 100'

SYM	DESCRIPTION	DATE	APPR.
	MOD P00006 AND MOD P00007	10/2025	
	MOD P00005	05/2023	

NAVFAC

SOUTH CAROLINA No. 23067 01/13/23 BAMFORTH

SEAL

BAMFORTH ENGINEERS + SURVEYORS

A/E INFO

APPROVED FOR COMMANDER NAVFAC

ACTIVITY: Approved by J. Scott Roberts, Asset Management Branch Head & Supervisory Facility Planner, PWD Beaufort, SC via email.

SATISFACTORY TO DATE 12/15/2022

DES CAB	DRW CAD / CHK ALB
PM/DM	KTB/RLH
BRANCH MANAGER	DLB
CHIEF ENG/ARCH	EJA
FIRE PROTECTION	DSN

DEPARTMENT OF THE NAVY
NAVAL FACILITIES ENGINEERING SYSTEMS COMMAND
DC CORE
MCAS BEAUFORT

NAVAL FACILITIES ENGINEERING SYSTEMS COMMAND - MID-ATLANTIC
NORFOLK, VA

BEAUFORT, SC

P-475 AIRCRAFT MAINTENANCE HANGAR - VOLUME 1 (BASE BID WITH OPTIONS)

LAYOUT PLAN

SCALE: GRAPHIC
EPROJECT NO.: 1363603
CONSTR. CONTR. NO.
NAVFAC DRAWING NO. 12859241
SHEET 69 OF 1412

CS104

DRAWFORM REVISION: 25 AUGUST 2020

FILE NAME: K:\jobs\20021\BMSA 10-02-25\BLDG-P475-1363603-CS104.dwg LAYOUT NAME: CS104 PLOTTED: Thursday, November 06, 2025 - 2:17pm USER: mtle

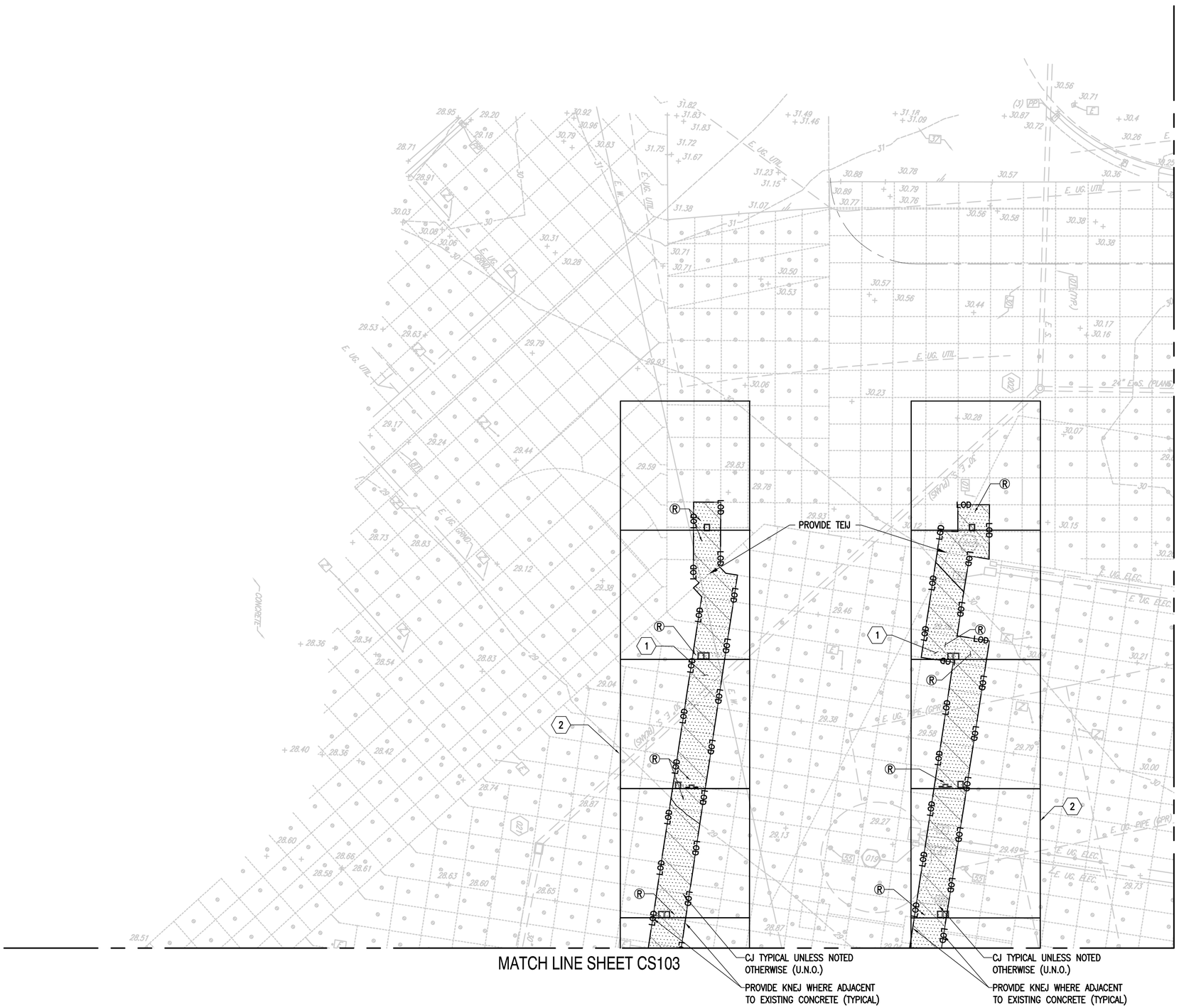

SITE IMPROVEMENT NOTES (THIS SHEET ONLY)

1. CONCRETE AIRFIELD PAVEMENT (REFER TO DETAIL CS501/C3 AND SHEET CS002 AND SHEET NOTE 3)
2. SUN SHADE BOUNDARY

JOINT LEGEND (THIS SHEET ONLY)

Ⓡ = REINFORCED CONCRETE PAVEMENT (REFER TO PCC NOTES SHEET CS502)

KNEJ = CONSTRUCTION JOINT BETWEEN NEW AND EXISTING PCC PAVEMENT (REFER TO SHEET CS502/B1)

TEIJ = THICKENED EDGE ISOLATION JOINT (REFER TO SHEET CS502/C3)

CJ = CONTRACTION JOINT (REFER TO SHEET CS502/D1)

SHEET NOTES

1. REFER TO SHEETS CP401 THROUGH CP404 FOR PAVEMENT MARKINGS.
2. REFER TO CS401 AND CS402 FOR ENLARGED JOINT PLANS.

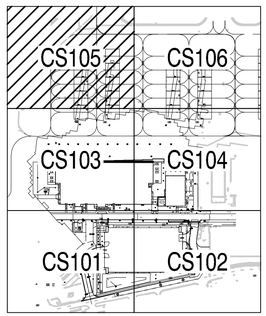

KEY PLAN

GRAPHIC SCALE

1" = 25' 0 25' 50' 75' 100'

SYM	DESCRIPTION	DATE	APPR
	MOD P00006 AND MOD P00007	10/2025	
	MOD P00005	05/2023	

NAVFAC

SOUTH CAROLINA No. 23067 01/13/23 BAMFORTH

SEAL

BAMFORTH ENGINEERS + SURVEYORS

A/E INFO

APPROVED

FOR COMMANDER NAVFAC

ACTIVITY

Approved by J. Scott Roberts, Asset Management Branch Head & Supervisory Facility Planner, PWD Beaufort, SC via email.

SATISFACTORY TO DATE 12/15/2022

DES	CAB	DRW	CAD	CHK	ALB

PM/DM	KTB/RLH
BRANCH MANAGER	DLB
CHIEF ENG/ARCH	EJA
FIRE PROTECTION	DSN

DEPARTMENT OF THE NAVY
NAVAL FACILITIES ENGINEERING SYSTEMS COMMAND
DC CODE
NAVAL FACILITIES ENGINEERING SYSTEMS COMMAND - MID-ATLANTIC
NORFOLK, VA
MCAS BEAUFORT
BEAUFORT, SC

P-475 AIRCRAFT MAINTENANCE HANGAR - VOLUME 1 (BASE BID WITH OPTIONS)

LAYOUT PLAN

SCALE: GRAPHIC
EPROJECT NO.: 1363603
CONSTR. CONTR. NO.
NAVFAC DRAWING NO. 12859242
SHEET 70 OF 1412

CS105

DRAWFORM REVISION: 25 AUGUST 2020

FILE NAME: K:\Jobs\20021\BJMSA 10-02-25\BJDC-P475-1363603-CS105.dwg LAYOUT NAME: CS105 PLOTTED: Thursday, November 06, 2025 - 2:17pm USER: mtw

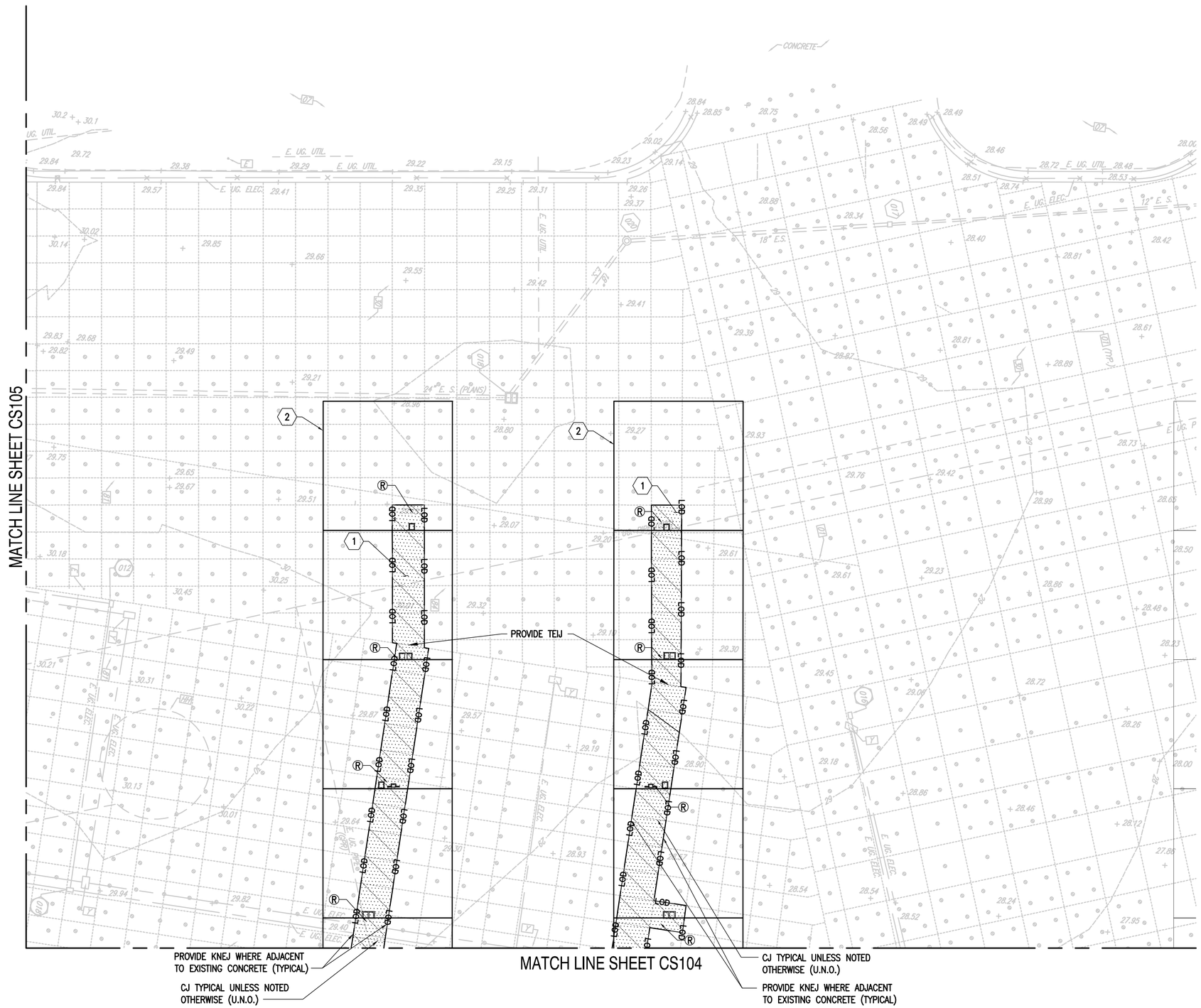

SITE IMPROVEMENT NOTES (THIS SHEET ONLY)

1. CONCRETE AIRFIELD PAVEMENT (REFER TO DETAIL CS501/C3 AND SHEET CS002)
2. SUN SHADE BOUNDARY

JOINT LEGEND (THIS SHEET ONLY)

Ⓡ = REINFORCED CONCRETE PAVEMENT (REFER TO PCC NOTES SHEET CS502)

KNEJ = CONSTRUCTION JOINT BETWEEN NEW AND EXISTING PCC PAVEMENT (REFER TO SHEET CS502/B1)

TEIJ = THICKENED EDGE ISOLATION JOINT (REFER TO SHEET CS502/C3)

CJ = CONTRACTION JOINT (REFER TO SHEET CS502/D1)

SHEET NOTES

1. REFER TO SHEETS CP401 THROUGH CP404 FOR PAVEMENT MARKINGS.
2. REFER TO CS402 FOR ENLARGED JOINT PLANS.
3. PROVIDE CONCRETE IN ACCORDANCE WITH SPECIFICATION SECTION 32 13 14.13 CONCRETE PAVING FOR AIRFIELDS AND OTHER HEAVY DUTY PAVEMENTS.

SOUTH CAROLINA STATE PLANE

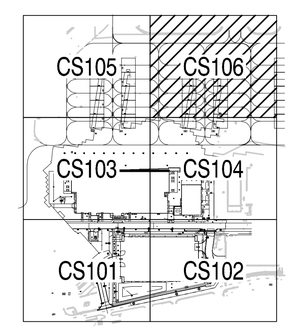

KEY PLAN

GRAPHIC SCALE

1" = 25' 0 25' 50' 75' 100'

SYM	DESCRIPTION	DATE	APPR
	MOD P00006 AND MOD P00007	10/2025	
	MOD P00005	05/2023	

NAVFAC

SOUTH CAROLINA No. 23067 01/13/23 ANTHONY L. BAMFORTH SEAL

BAMFORTH ENGINEERS + SURVEYORS

A/E INFO

APPROVED FOR COMMANDER NAVFAC

ACTIVITY: Approved by J. Scott Roberts, Asset Management Branch Head & Supervisory Facility Planner, PWD Beaufort, SC via email.

SATISFACTORY TO: DATE: 12/15/2022

DES: CAB | DRW: CAD | CHK: ALB

PM/DM: KTB/RLH

BRANCH MANAGER: DLB

CHIEF ENGI/ARCH: EJA

FIRE PROTECTION: DSN

DEPARTMENT OF THE NAVY
NAVAL FACILITIES ENGINEERING SYSTEMS COMMAND
NAVAL FACILITIES ENGINEERING SYSTEMS COMMAND - MID-ATLANTIC
NORFOLK, VA
DC CORE
MCAS BEAUFORT
BEAUFORT, SC

P-475 AIRCRAFT MAINTENANCE HANGAR - VOLUME 1 (BASE BID WITH OPTIONS)

LAYOUT PLAN

SCALE: GRAPHIC

EPROJECT NO.: 1363603

CONSTR. CONTR. NO.

NAVFAC DRAWING NO. 12859243

SHEET 71 OF 1412

CS106

DRAWFORM REVISION: 25 AUGUST 2020

FILE NAME: K:\Jobs\20021\BJMSA 10-02-25\BLDG-P475-1363603-CS106.dwg LAYOUT NAME: CS106 PLOTTED: Thursday, November 06, 2025 - 2:17pm USER: mtak

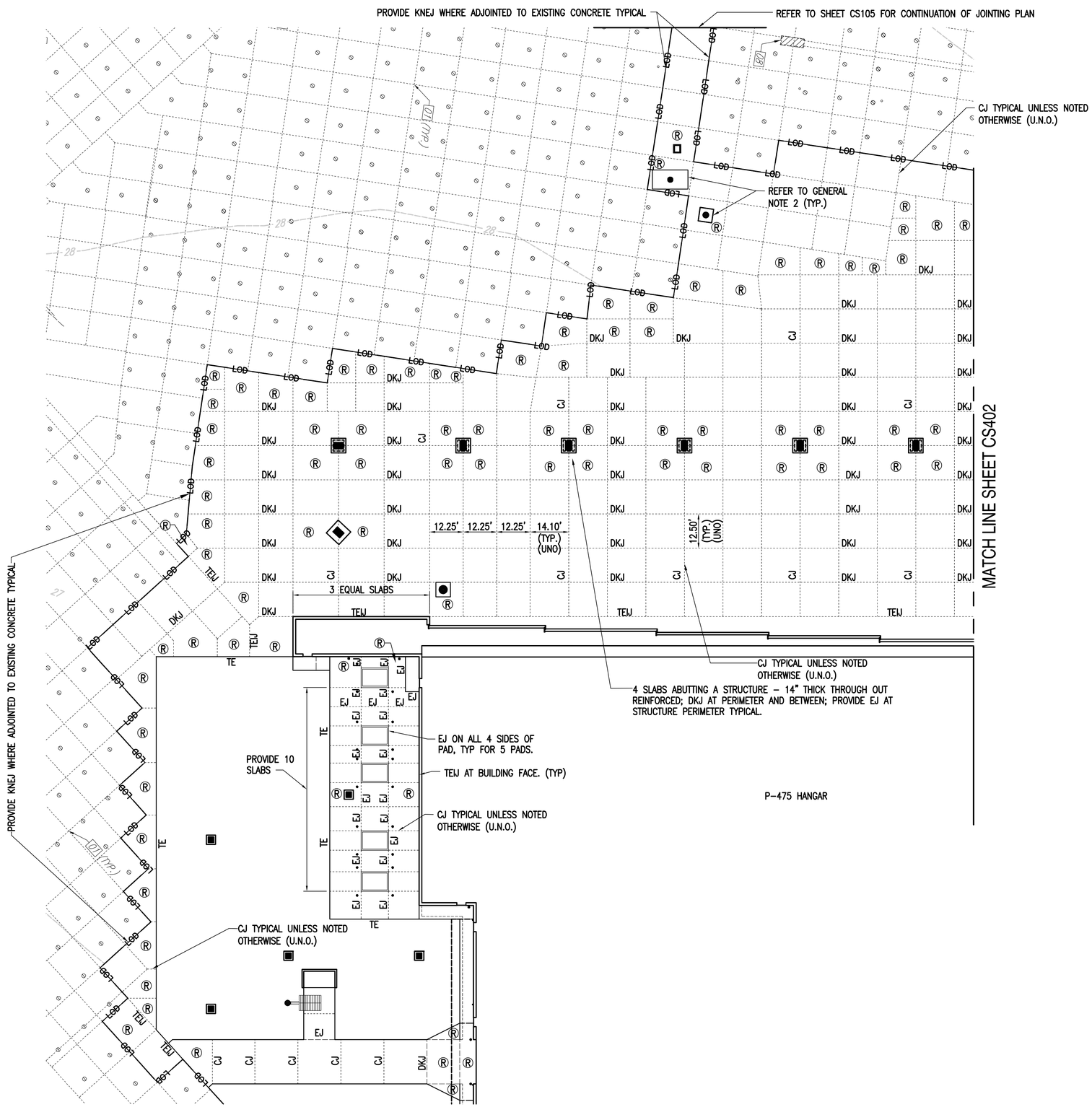

GENERAL NOTES: (THIS SHEET ONLY)

1. REFER TO PCC PAVEMENT NOTES SHEET CS502.
2. FOR APRON SLAB(S) OVER A MANHOLE, ISOLATE THE APRON SLAB(S) FROM THE MANHOLE COVER SLAB AND THE MANHOLE COLLAR BY –
   A. THE MANHOLE COVER SLAB MUST BE 24" MINIMUM BELOW FINISHED GRADE. COORDINATE WITH MANHOLE DETAILS ON ELECTRICAL SHEETS.
   B. APPLY ASPHALT EMULSION TO THE MANHOLE COLLAR AS A BOND BREAKER FOR THE APRON SLAB.

JOINT LEGEND (THIS SHEET ONLY)

TE = THICKENED EDGE PANEL (REFER TO SHEET CS502/D3)

TEIJ = THICKENED EDGE ISOLATION JOINT (REFER TO SHEET CS502/C3)

DKJ = DOWELED CONSTRUCTION JOINT (REFER TO SHEET CS502/B3)

CJ = CONTRACTION JOINT (REFER TO SHEET CS502/D1)

Ⓡ = REINFORCED CONCRETE PAVEMENT (REFER TO PCC NOTES SHEET CS502)

KNEJ = CONSTRUCTION JOINT BETWEEN NEW AND EXISTING PCC PAVEMENT (REFER TO SHEET CS502/B1)

SOUTH CAROLINA STATE PLANE

GRAPHIC SCALE

1" = 20' 0 20' 40' 60' 80'

SYM	DESCRIPTION	DATE	APPR.
	MOD P00006 AND MOD P00007	10/2025	
	MOD P00005	05/2023	

NAVFAC

SOUTH CAROLINA No. 23067 01/13/23 PROFESSIONAL ENGINEER

SEAL

BAMFORTH ENGINEERS + SURVEYORS

A/E INFO

APPROVED

FOR COMMANDER NAVFAC

ACTIVITY

Approved by J. Scott Roberts, Asset Management Branch Head & Supervisory Facility Planner, PWD Beaufort, SC via email.

SATISFACTORY TO DATE 12/15/2022

DES CAB	DRW CAD	CHK ALB
PM/DM	KTB/RLH
BRANCH MANAGER	DLB
CHIEF ENG/ARCH	EJA
FIRE PROTECTION	DSN

DEPARTMENT OF THE NAVY
NAVAL FACILITIES ENGINEERING SYSTEMS COMMAND
DC CORE
NAVAL FACILITIES ENGINEERING SYSTEMS COMMAND - MID-ATLANTIC
NORFOLK, VA
MCAS BEAUFORT
BEAUFORT, SC

P-475 AIRCRAFT MAINTENANCE HANGAR - VOLUME 1 (BASE BID WITH OPTIONS)

ENLARGED JOINTING PLAN

SCALE: GRAPHIC

EPROJECT NO.: 1363603

CONSTR. CONTR. NO.

NAVFAC DRAWING NO. 12859244

SHEET 72 OF 1412

CS401

DRAWFORM REVISION: 25 AUGUST 2020

FILE NAME: K:\jobs\20021\BJMSA 10-02-25\BLDG-P475-1363603-CS401.dwg LAYOUT NAME: CS401 PLOTTED: Thursday, November 06, 2025 - 2:18pm USER: mlw

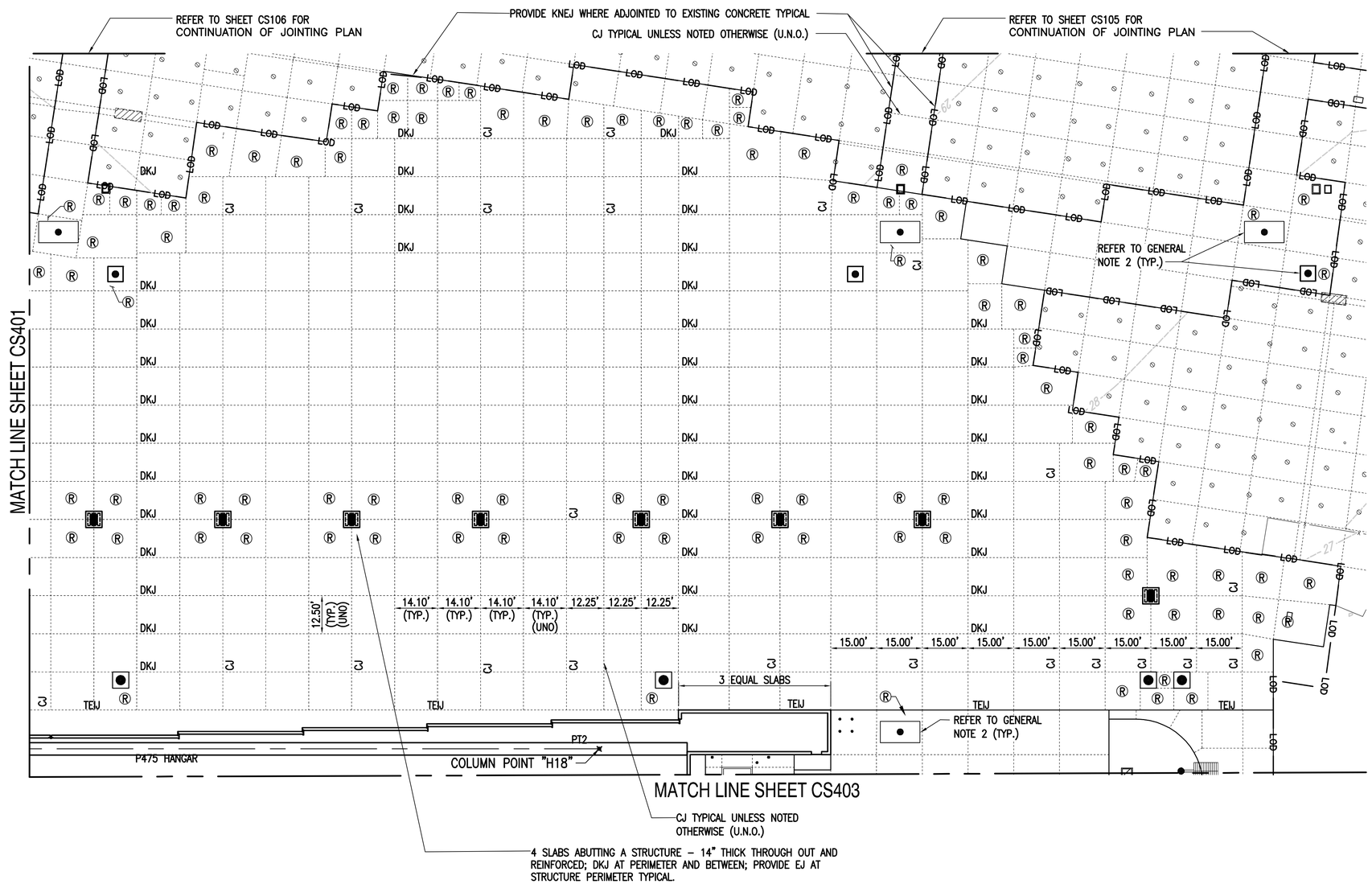

GENERAL NOTES: (THIS SHEET ONLY)

1. REFER TO PCC PAVEMENT NOTES SHEET CS502.
2. FOR APRON SLAB(S) OVER A MANHOLE, ISOLATE THE APRON SLAB(S) FROM THE MANHOLE COVER SLAB AND THE MANHOLE COLLAR BY –
   A. THE MANHOLE COVER SLAB MUST BE 24" MINIMUM BELOW FINISHED GRADE. COORDINATE WITH MANHOLE DETAILS ON ELECTRICAL SHEETS.
   B. APPLY ASPHALT EMULSION TO THE MANHOLE COLLAR AS A BOND BREAKER FOR THE APRON SLAB.

JOINT LEGEND (THIS SHEET ONLY)

TE = THICKENED EDGE PANEL (REFER TO SHEET CS502/D3)

TEIJ = THICKENED EDGE ISOLATION JOINT (REFER TO SHEET CS502/C3)

DKJ = DOWELED CONSTRUCTION JOINT (REFER TO SHEET CS502/B3)

CJ = CONTRACTION JOINT (REFER TO SHEET CS502/D1)

Ⓡ = REINFORCED CONCRETE PAVEMENT (REFER TO PCC NOTES SHEET CS502)

KNEJ = CONSTRUCTION JOINT BETWEEN NEW AND EXISTING PCC PAVEMENT (REFER TO SHEET CS502/B1)

SOUTH CAROLINA STATE PLANE

N

GRAPHIC SCALE

1" = 20' 0 20' 40' 60' 80'

SYM	DESCRIPTION	DATE	APPR
	MOD P00006 AND MOD P00007	10/2025	
	MOD P00005	05/2023	

NAVFAC

SOUTH CAROLINA No. 23067 01/13/23 PROFESSIONAL ENGINEER

SEAL

BAMFORTH ENGINEERS + SURVEYORS

A/E INFO

APPROVED

FOR COMMANDER NAVFAC

ACTIVITY

Approved by J. Scott Roberts, Asset Management Branch Head & Superaleory Facility Planner, PWD Beaufort, SC via email.

SATISFACTORY TO DATE 12/15/2022

DES CAB	DRW CAD CHK ALB
PM/DM	KTB/RLH
BRANCH MANAGER	DLB
CHIEF ENGIARCH	EJA
FIRE PROTECTION	DSN

DEPARTMENT OF THE NAVY
NAVAL FACILITIES ENGINEERING SYSTEMS COMMAND
NAVAL FACILITIES ENGINEERING SYSTEMS COMMAND - MID-ATLANTIC NORFOLK VA
DC CODE
MCAS BEAUFORT
BEAUFORT, SC

P-475 AIRCRAFT MAINTENANCE HANGAR - VOLUME 1 (BASE BID WITH OPTIONS)

ENLARGED JOINTING PLAN

SCALE: GRAPHIC
EPROJECT NO.: 1363603
CONSTR. CONTR. NO.
NAVFAC DRAWING NO. 12859245
SHEET 73 OF 1412

CS402

DRAWFORM REVISION: 25 AUGUST 2020

FILE NAME: K:\jobs\20021\BJWSA 10-02-25\BLDG-P475-1363603-CS402.dwg LAYOUT NAME: CS402 PLOTTED: Thursday, November 06, 2025 - 2:18pm USER: mtw

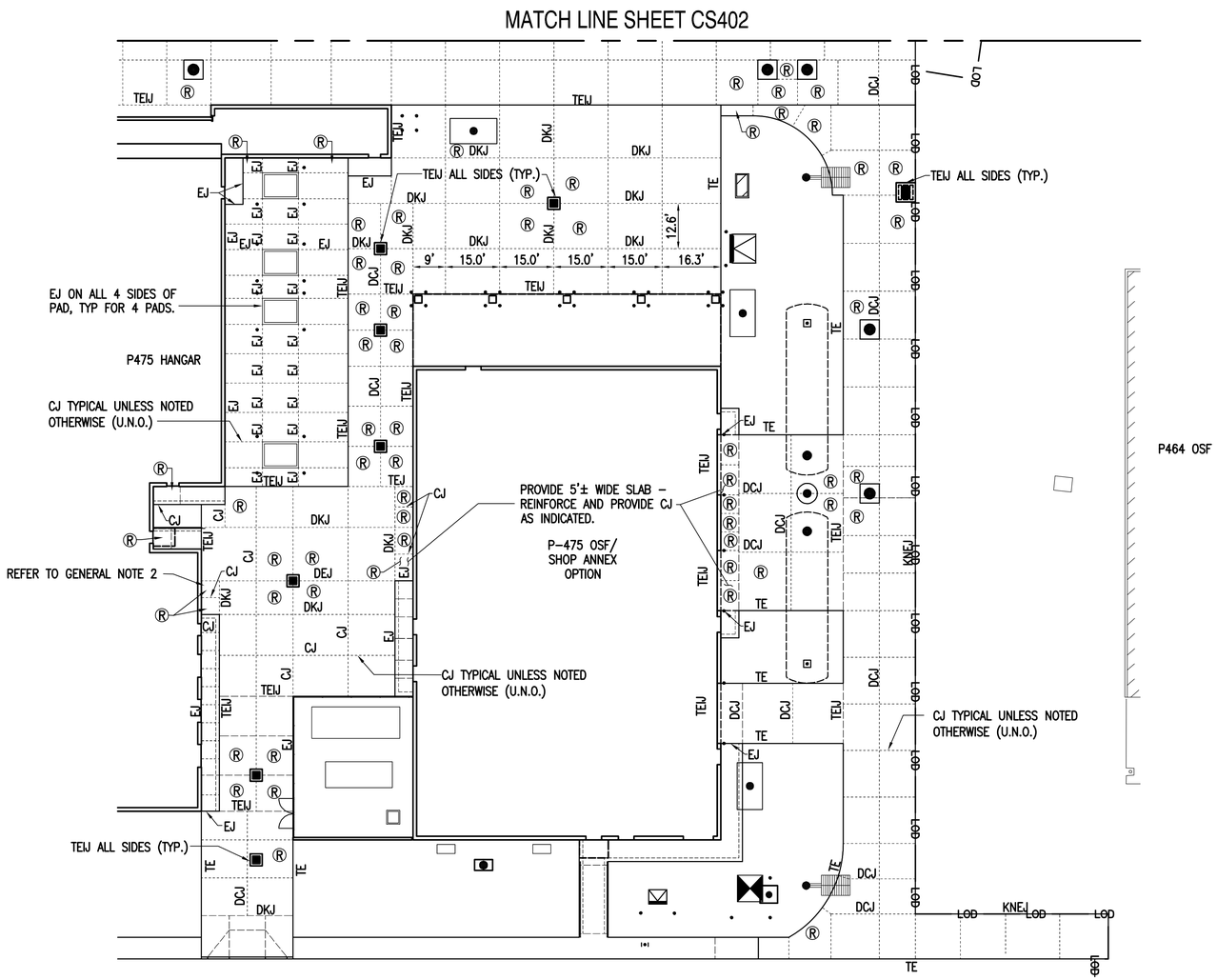

GENERAL NOTES: (THIS SHEET ONLY)

1. REFER TO PCC PAVEMENT NOTES SHEET CS502.

JOINT LEGEND (THIS SHEET ONLY)

TE = THICKENED EDGE PANEL (REFER TO SHEET CS502/D3)

TEIJ = THICKENED EDGE ISOLATION JOINT (REFER TO SHEET CS502/C3)

DKJ = DOWELED CONSTRUCTION JOINT (REFER TO SHEET CS502/B3)

CJ = CONTRACTION JOINT (REFER TO SHEET CS502/D1)

DCJ = DOWELED CONTRACTION JOINT (REFER TO SHEET CS502/C1)

Ⓡ = REINFORCED CONCRETE PAVEMENT (REFER TO PCC NOTES SHEET CS502)

KNEJ = CONSTRUCTION JOINT BETWEEN NEW AND EXISTING PCC PAVEMENT (REFER TO SHEET CS502/B1)

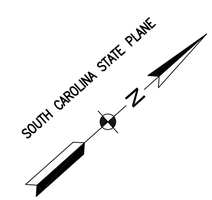

REFER TO VOLUME 6 FOR BASE BID

GRAPHIC SCALE

1" = 20' 0 20' 40' 60' 80'

SYM	DESCRIPTION	DATE	APPR
	MOD P00006 AND MOD P00007	10/2025	
	MOD P00005	05/2023	

NAVFAC

SOUTH CAROLINA No. 23067 01/13/23 PROFESSIONAL ENGINEER

SEAL

BAMFORTH ENGINEERS + SURVEYORS

A/E INFO

APPROVED

FOR COMMANDER NAVFAC

ACTIVITY

Approved by J. Scott Roberts, Asset Management Branch Head & Supervisory Facility Planner, PWD Beaufort, SC via email.

SATISFACTORY TO DATE 12/15/2022

DES CAB	DRW CAD CHK ALB
PM/DM	KTB/RLH
BRANCH MANAGER	DLB
CHIEF ENG/ARCH	EJA
FIRE PROTECTION	DSN

DEPARTMENT OF THE NAVY
NAVAL FACILITIES ENGINEERING SYSTEMS COMMAND
DC CODE
NAVAL FACILITIES ENGINEERING SYSTEMS COMMAND - MID-ATLANTIC NORFOLK, VA
MCAS BEAUFORT
BEAUFORT, SC

P-475 AIRCRAFT MAINTENANCE HANGAR - VOLUME 1 (BASE BID WITH OPTIONS)

ENLARGED JOINTING PLAN

SCALE: GRAPHIC

EPROJECT NO.: 1363603

CONSTR. CONTR. NO.

NAVFAC DRAWING NO. 12859246

SHEET 74 OF 1412

CS403

DRAWFORM REVISION: 25 AUGUST 2020

FILE NAME: K:\jobs\200211\BAMSA 10-02-25\BLDG-P475-1363603-CS403.dwg LAYOUT NAME: CS403 PLOTTED: Thursday, November 06, 2025 - 2:18pm USER: mtw

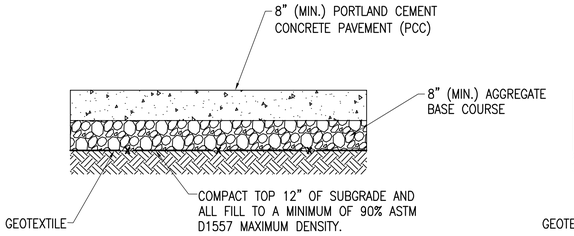

NOTE: APPLIES TO ALL NON-AIRFIELD PCC, UNLESS NOTED OTHERWISE (U.N.O.)

C1 CONCRETE PAVEMENT (PCC) DETAIL

N.T.S.

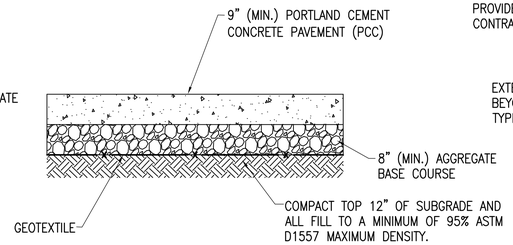

C2 HEAVY DUTY CONCRETE PAVEMENT (PCC) OSF RAMP FROM HANGAR APRON SECTION

N.T.S.

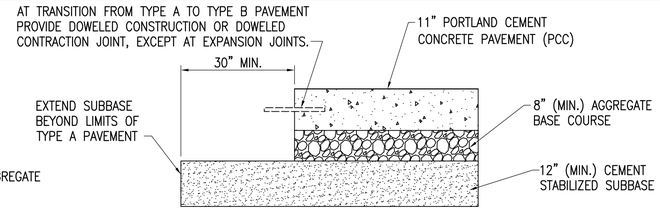

TYPE A

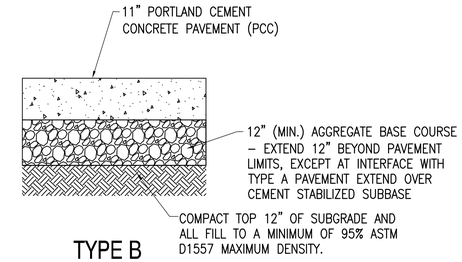

TYPE B

NOTES:

1. PROVIDE PCC TYPE AS INDICATED ON SHEET CS002.
2. PLACE MOORING EYE IN THE CENTER OF EACH NEW SLAB LOCATED WITHIN A SUNSHADE. IN ADDITION PROVIDE FOUR (4) RETROFIT MOORING EYES WITHIN EACH SUNSHADE, WITH EXACT LOCATION DETERMINED BY AIR OPERATIONS VIA THE CONTRACTING OFFICER. REFER TO RETROFIT MOORING EYE DETAIL ON CS503.

C3 AIRFIELD CONCRETE PAVEMENT (PCC) DETAILS

N.T.S.

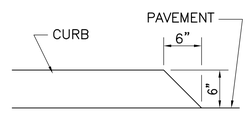

C2 CURB WIPEDOWN

N.T.S.

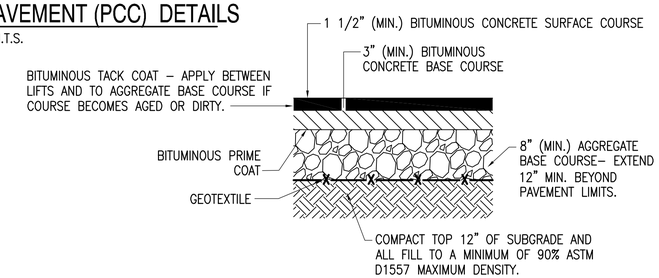

C5 PARKING GARAGE ACCESS DRIVE PAVEMENT DETAIL

N.T.S.

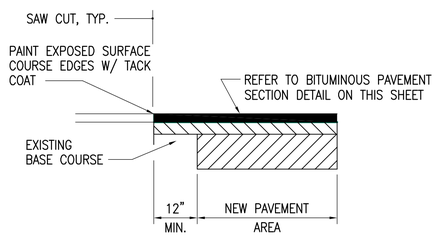

B1 BITUMINOUS PAVEMENT INTERFACE DETAIL

N.T.S.

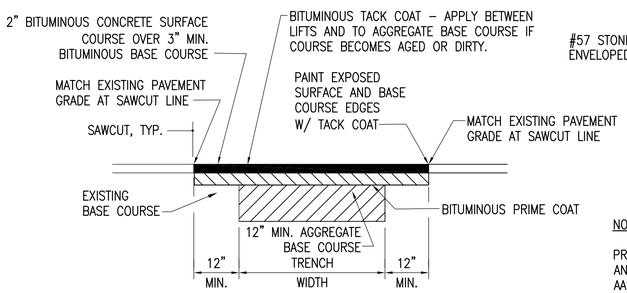

NOTE:
PROVIDE MINIMUM THICKNESS SHOWN OR MATCH EXISTING, WHICHEVER IS GREATER.

A1 BITUMINOUS PAVEMENT PATCH DETAIL

N.T.S.

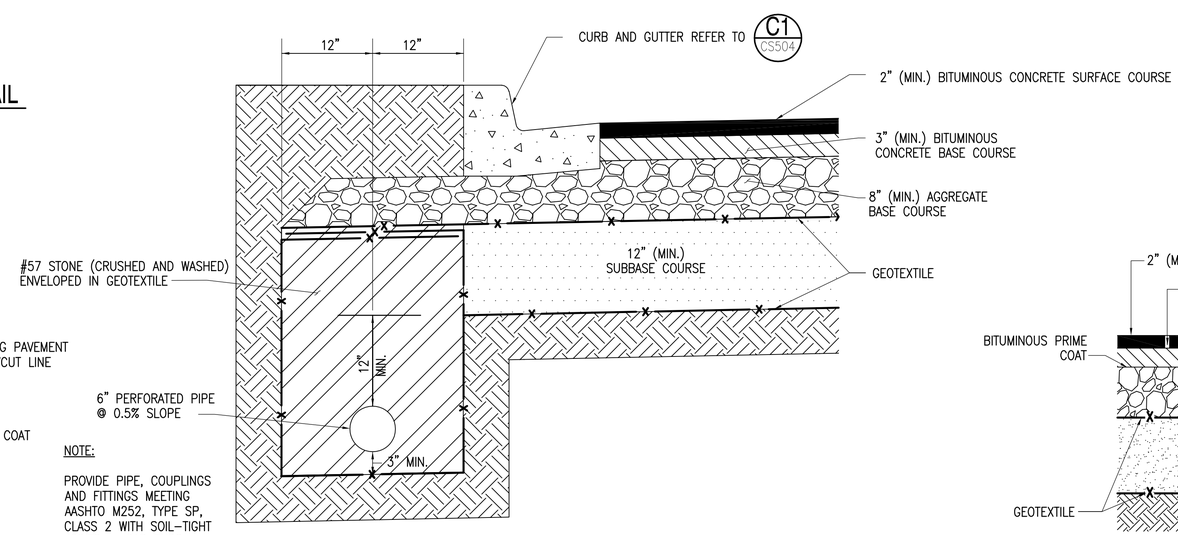

NOTE:

PROVIDE PIPE, COUPLINGS AND FITTINGS MEETING AASHTO M252, TYPE SP, CLASS 2 WITH SOIL-TIGHT JOINTS. CAP ENDS TERMINATING IN STONE.

A3 SUBDRAINAGE SYSTEM FOR BITUMINOUS PAVEMENT

N.T.S.

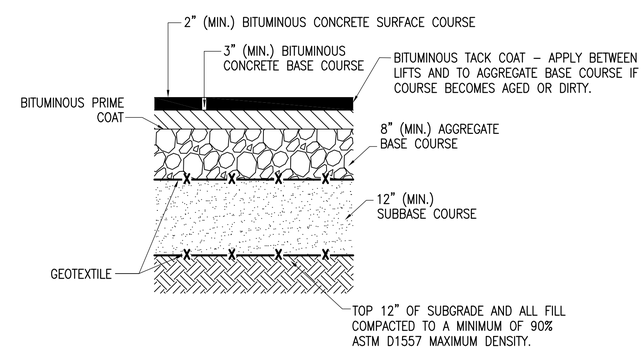

A4 BITUMINOUS PAVEMENT DETAIL

N.T.S.

STM	DESCRIPTION	DATE	APPR.
	MOD P00006 AND MOD P00007	10/2025	
	MOD P00005	05/2023	

NAVFAC

SOUTH CAROLINA PROFESSIONAL ENGINEER No. 23067 01/13/23 BAMFORTH

SEAL

BAMFORTH ENGINEERS + SURVEYORS

A/E INFO

APPROVED

FOR COMMANDER NAVFAC

ACTIVITY

Approved by J. Scott Roberts, Asset Management Branch Head & Supervisory Facility Planner, PWD Beaufort, SC via email.

SATISFACTORY TO DATE 12/15/2022

DES CAB	DRW CAD CHK ALB
PM/DM	KTB/RLH
BRANCH MANAGER	DLB
CHIEF ENGIARCH	EJA
FIRE PROTECTION	DSN

DEPARTMENT OF THE NAVY
NAVAL FACILITIES ENGINEERING SYSTEMS COMMAND
NAVAL FACILITIES ENGINEERING SYSTEMS COMMAND - MID-ATLANTIC NORFOLK VA
DC CORE
MCAS BEAUFORT
BEAUFORT, SC
P-475 AIRCRAFT MAINTENANCE HANGAR - VOLUME 1 (BASE BID WITH OPTIONS)
DETAILS

SCALE: NONE
EPROJECT NO.: 1363603
CONSTR. CONTR. NO.
NAVFAC DRAWING NO. 12859247
SHEET 75 OF 1412

CS501

DRAWFORM REVISION: 25 AUGUST 2020

FILE NAME: K:\jobs\20021\BUMSA 10-02-25\BLDG-P475-1363603-CS501.dwg LAYOUT NAME: CS501 PLOTTED: Thursday, November 06, 2025 - 2:18pm USER: mtw

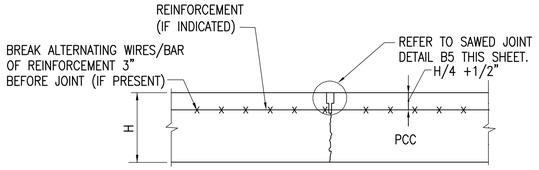

D1 CONTRACTION JOINT (CJ)

N.T.S.

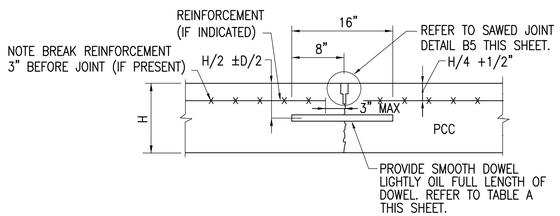

C1 DOWELED CONTRACTION JOINT (DCJ)

N.T.S.

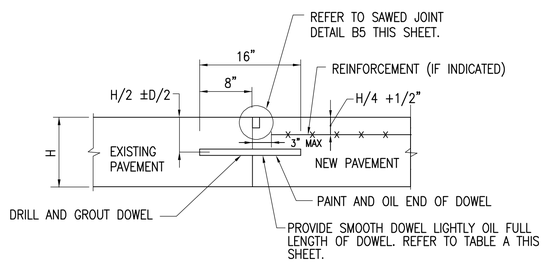

NOTE: THIS DETAIL MUST BE USED IN ALL NEW SLABS ABUTTING EXPOSED CONCRETE EQUAL TO OR GREATER THAN 10.5" THICK EXCEPT WHERE THICKENED EDGE ISOLATION JOINT (TEIJ) ARE INDICATED. FOR EXPOSED EDGES LESS THAN 10.5" THICK PROVIDE UNDERCUT METHOD CONSTRUCTION JOINT (REFER TO DETAIL C5 ON THIS SHEET). JOINT TYPES ARE NOT TO BE MIXED ON THE SAME SLAB EDGE. BASE BIDS ON PROVIDING 150 LF OF UNDERCUT METHOD CONSTRUCTION JOINT AND PROVIDING KNEJ FOR ALL REMAINING KNEJ TYPE JOINTS.

B1 CONSTRUCTION JOINT BETWEEN NEW AND EXISTING PCC PAVEMENT (KNEJ)

N.T.S.

TABLE A –DOWEL SIZE AND SPACING FOR CONSTRUCTION, CONTRACTION, AND EXPANSION JOINT			
PAVEMENT THICKNESS INCHES	MINIMUM DOWEL LENGTH (INCHES)	MAXIMUM DOWEL SPACING (INCHES)	DOWEL DIAMETER AND TYPE
LESS THAN 8"	16"	12"	3/4" BAR
8" – 11.5"	16"	12"	1" BAR

NOTES:

1. DOWELS MUST BE COATED WITH RUST–INHIBITING PAINT.
2. AT JOINT INTERSECTIONS HAVING A SLAB WITH DOWELS ON TWO SIDES OF THE SLAB PLACE DOWELS AT THE INTERSECTIONS AS SEEN IN DETAIL "A".

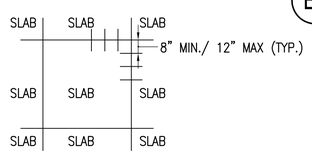

DETAIL A

N.T.S.

PCC PAVEMENT NOTES:

1. H = PAVEMENT THICKNESS 8" (NON–AIRFIELD) OR 11" (AIRFIELD) UNLESS NOTED OTHERWISE
2. EXCEPT AT ROOF DOWNSPOUT LOCATIONS, PROVIDE REINFORCEMENT (NO. 4 REBAR 12" ON CENTER EACH WAY) IN ALL SLABS INDICATED WITH "R", IN ALL ODD SHAPED SLABS, AND SLABS CONTAINING PENETRATIONS SUCH AS MANHOLES, CATCH BASINS, VALVE BOXES, WHETHER INDICATED "R" OR NOT. PROVIDE REINFORCEMENT AT ALL ROOF DOWNSPOUT LOCATIONS PER DETAIL CG513/D2.
3. BASE COURSE NOT SHOWN IN SOME DETAILS FOR CLARITY.
4. PROVIDE CONCRETE EXPANSION JOINTS AT ABUTTING CONCRETE STRUCTURES, CURB, AND CURB & GUTTERS.
5. AT CONTRACTOR'S OPTION/COST, DOWELED CONSTRUCTION JOINTS (DKJ) MAY BE PROVIDED IN LIEU OF CONTRACTION JOINTS.
6. DOWEL BASKET ASSEMBLIES AT JOINT INTERSECTIONS MUST BE ISOLATED FROM ONE ANOTHER AND DOWEL BARS MUST BE NO GREATER THAN 18" NOR LESS THAN 15" FROM THE JOINT INTERSECTION.

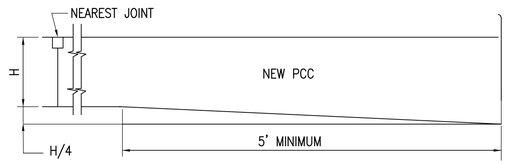

D3 THICKENED EDGE PANEL (TE)

N.T.S.

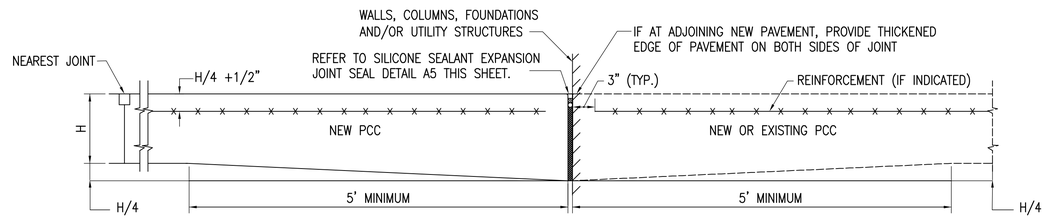

C3 THICKENED EDGE ISOLATION JOINT (TEIJ)

N.T.S.

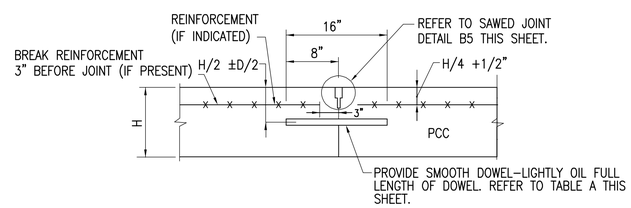

B3 DOWELED CONSTRUCTION JOINT (DKJ)

N.T.S.

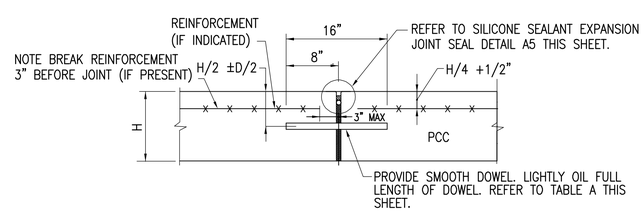

A3 DOWELED EXPANSION JOINT (DEJ)

N.T.S.

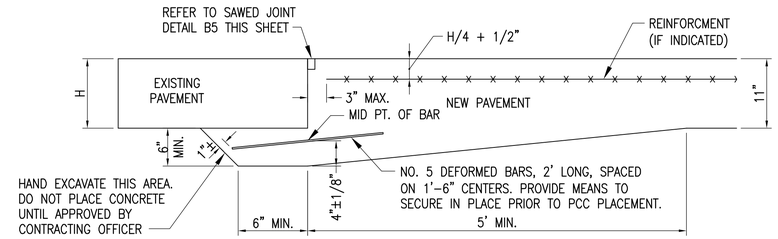

NOTES:

1. REFER TO DETAIL B1 THIS SHEET FOR APPLICABILITY OF THIS DETAIL.
2. CONTRACTING OFFICER MUST APPROVE USE OF THIS DETAIL.

C5 UNDERCUT METHOD CONSTRUCTION JOINT BETWEEN NEW AND EXISTING PAVEMENT

N.T.S.

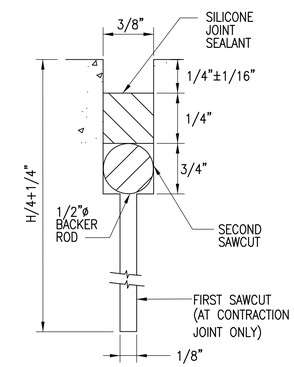

B5 SILICONE SEALANT SAWED JOINT DETAIL

N.T.S.

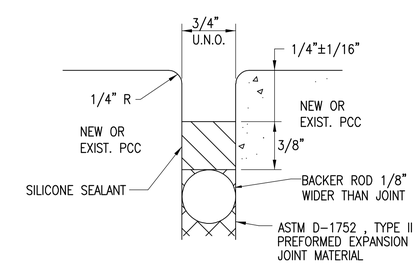

A5 SILICONE SEALANT EXPANSION JOINT SEAL DETAIL (EJ)

N.T.S.

STM	DESCRIPTION	DATE	APPR.
	MOD P00006 AND MOD P00007	10/2025	
	MOD P00005	05/2023	

NAVFAC

SOUTH CAROLINA No. 23067 01/13/23 BAMFORTH SEAL

BAMFORTH ENGINEERS + SURVEYORS

A/E INFO

APPROVED

FOR COMMANDER NAVFAC

ACTIVITY

Approved by J. Scott Roberts, Asset Management Branch Head & Supervisory Facility Planner, PWD Beaufort, SC via email.

SATISFACTORY TO DATE 12/15/2022

DES	CAB	DRW	CAD	CHK	ALB
PM/DM	KTB/RLH				
BRANCH MANAGER	DLB				
CHIEF ENG/ARCH	EJA				
FIRE PROTECTION	DSN				

DEPARTMENT OF THE NAVY
NAVAL FACILITIES ENGINEERING SYSTEMS COMMAND
DC CORE
NAVAL FACILITIES ENGINEERING SYSTEMS COMMAND - MID-ATLANTIC
NORFOLK, VA
MCAS BEAUFORT
BEAUFORT, SC
P-475 AIRCRAFT MAINTENANCE HANGAR - VOLUME 1 (BASE BID WITH OPTIONS)
PCC PAVEMENT DETAILS

SCALE: NONE

EPROJECT NO.: 1363603

CONSTR. CONTR. NO.

NAVFAC DRAWING NO. 12859248

SHEET 76 OF 1412

CS502

DRAWFORM REVISION: 25 AUGUST 2020

FILE NAME: K:\jobs\20021\BJRSA 10-02-25\BLDG-P475-1363603-CS502.dwg LAYOUT NAME: CS502 PLOTTED: Thursday, November 06, 2025 - 2:18pm USER: mlw

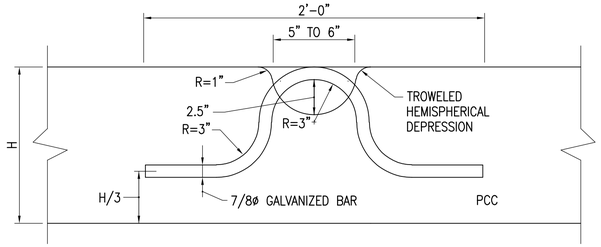

C1 TIEDOWN / MOORING EYE-TYPE A DETAIL

N.T.S.

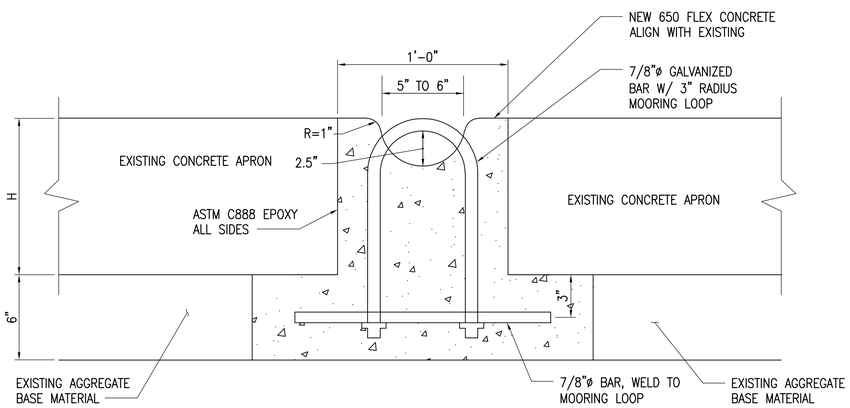

B1 RETROFIT MOORING EYE DETAIL

N.T.S.

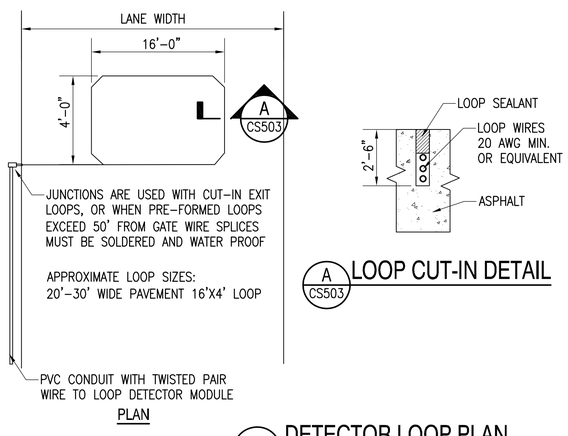

A CS503 LOOP CUT-IN DETAIL

A1 DETECTOR LOOP PLAN

NTS

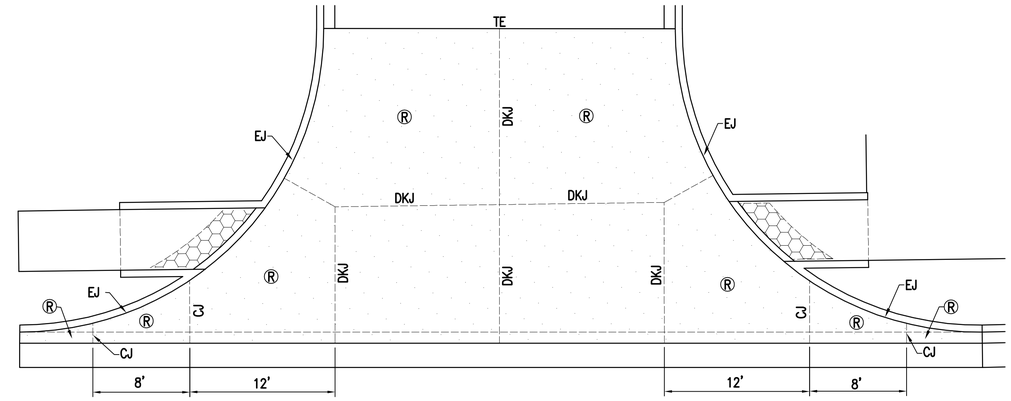

C4 CONCRETE ENTRANCE PAVEMENT JOINT PLAN

N.T.S.

CONCRETE ENTRANCE PAVEMENT JOINT LEGEND:

CJ = CONTRACTION JOINT (REFER TO SHEET CS502/D1)

EJ = 1/2" EXPANSION JOINT (REFER TO SHEET CS502/A5)

DCJ = DOWELED CONTRACTION JOINT (REFER TO SHEET CS502/C1)

DKJ = DOWELED CONSTRUCTION JOINT (REFER TO SHEET CS502/B3)

TE = THICKENED EDGE (REFER TO SHEET CS502/D3)

TRIJ = THICKENED EDGE ISOLATION JOINT (REFER TO SHEET CS502/C3)

® = REINFORCED CONCRETE PAVEMENT (REFER TO PCC PAVEMENT NOTES ON SHEET CS502)

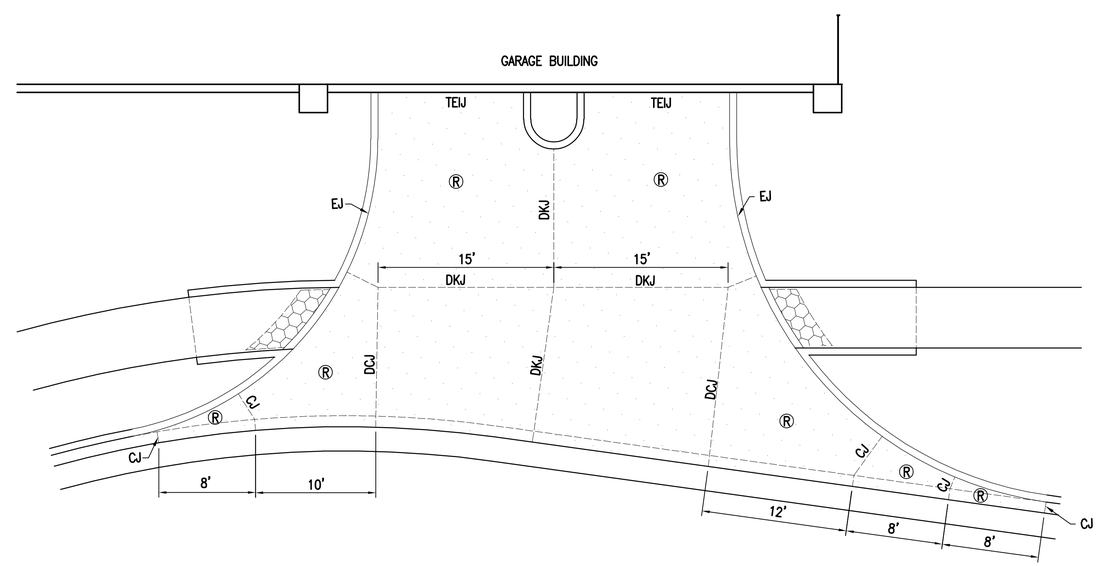

A4 CONCRETE ENTRANCE PAVEMENT JOINT PLAN

N.T.S.

SYM	DESCRIPTION	DATE	APPR.
	MOD P00006 AND MOD P00007	10/2025	
	MOD P00005	05/2023	

NAVFAC

SOUTH CAROLINA No. 23067 01/13/23 BAMFORTH

SEAL

BAMFORTH ENGINEERS + SURVEYORS

A/E INFO

APPROVED

FOR COMMANDER NAVFAC

ACTIVITY

Approved by J. Scott Roberts, Asset Management Branch Head & Supervisory Facility Planner, PWD Beaufort, SC via email.

SATISFACTORY TO DATE 12/15/2022

DES	CAB	DRW	CAD	CHK	ALB

PM/DM KTB/RLH

BRANCH MANAGER DLB

CHIEF ENG/ARCH EJA

FIRE PROTECTION DSN

DEPARTMENT OF THE NAVY
NAVAL FACILITIES ENGINEERING SYSTEMS COMMAND
NAVAL FACILITIES ENGINEERING SYSTEMS COMMAND - MID-ATLANTIC
NORFOLK VA
DC CODE
MCAS BEAUFORT
BEAUFORT, SC

P-475 AIRCRAFT MAINTENANCE HANGAR - VOLUME 1 (BASE BID WITH OPTIONS)

DETAILS

SCALE: NONE

EPROJECT NO.: 1363603

CONSTR. CONTR. NO.

NAVFAC DRAWING NO.
12859249

SHEET 77 OF 1412

CS503

DRAWFORM REVISION: 25 AUGUST 2020

FILE NAME: K:\Jobs\20021\BMSA 10-02-25\BLDG-P475-1363603-CS503.dwg LAYOUT NAME: CS503 PLOTTED: Thursday, November 06, 2025 - 2:19pm USER: mtw

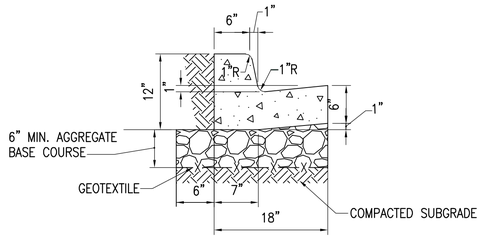

C1 CURB AND GUTTER DETAIL
N.T.S.

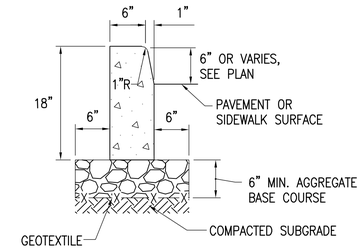

C3 CURB DETAIL
N.T.S.

CONCRETE SIDEWALK NOTES:

1. CONTRACTION JOINT AT SPACING EQUAL TO WIDTH OF SIDEWALK.
2. CONSTRUCTION COLD JOINTS MAY BE USED IN PLACE OF CONTRACTION JOINTS.
3. EXPANSION JOINT AT STRUCTURES, EXISTING CONCRETE, OBSTRUCTIONS, EVERY 40' OF STRAIGHT RUN, AND AT CHANGES IN DIRECTION, UNLESS OTHERWISE NOTED. RECESS EXPANSION JOINT MATERIAL 1/4" BELOW THE SURFACE. UNLESS NOTED OTHERWISE, EXPANSION JOINT MUST BE 1/2" WIDE.
4. 6X6-W1.4XW1.4 WWF AT MID-DEPTH IN PANELS WITH PENETRATING VALVE BOX, MANHOLE, ETC. ISOLATE STRUCTURE WITH 1/2" PREFORMED EXPANSION JOINT MATERIAL RECESSED 1/4" BELOW SURFACE.

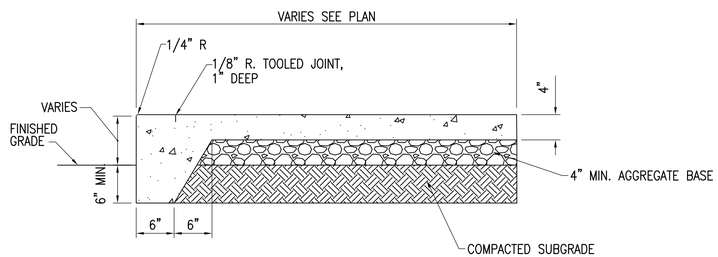

NOTE:
REFER TO CONCRETE SIDEWALK NOTES/DETAIL B4 THIS SHEET.

B1 TURNED DOWN EDGE SIDEWALK
N.T.S.

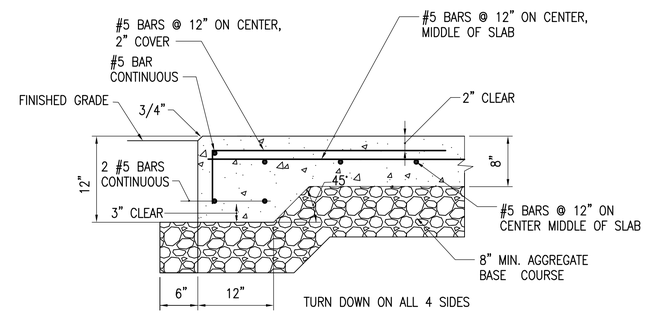

NOTES:

1. PAD MUST BE CONSTRUCTED FLAT WITH NO DRAINAGE SLOPE SUCH THAT NO SHIMMING ON LOCKER IS REQUIRED.
2. PROVIDE 2 – 10 FEET LONG COPPER GROUND RODS AT OPPOSING CORNERS.

B3 READY SERVICE LOCKER (RSL) CONCRETE PAD DETAIL
N.T.S.

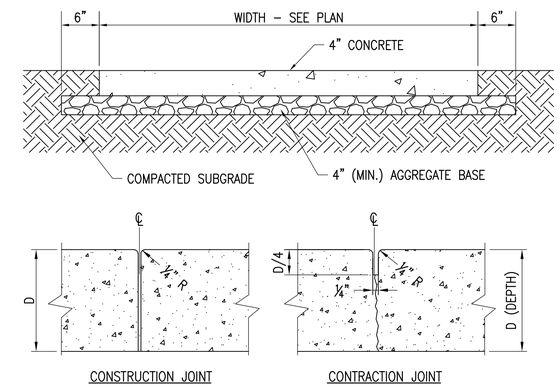

B4 TYPICAL CONCRETE SIDEWALK
N.T.S.

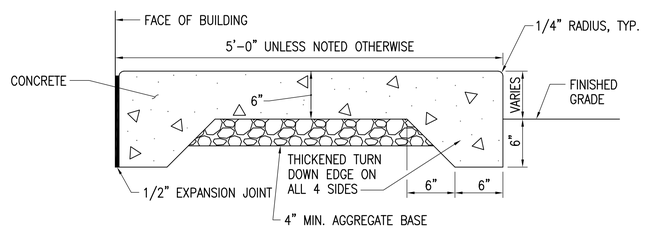

A1 CONCRETE DOOR STOOP
N.T.S.

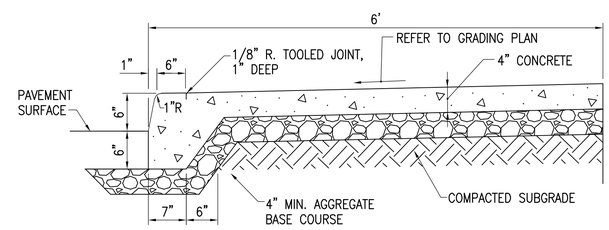

NOTE:
REFER TO CONCRETE SIDEWALK NOTES/DETAIL B4 THIS SHEET.

A3 TURNED-DOWN-EDGE SIDEWALK FOR PAVEMENT
N.T.S.

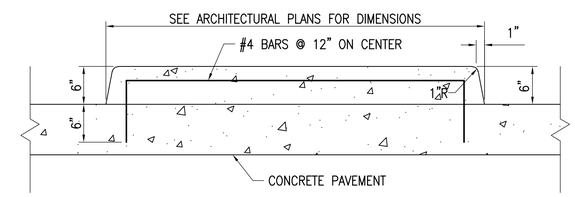

A4 PARKING GARAGE CONCRETE MEDIAN
N.T.S.

SYM	DESCRIPTION	DATE	APPR.
	MOD P00006 AND MOD P00007	10/2025	
	MOD P00005	05/2023	

NAVFAC

SOUTH CAROLINA PROFESSIONAL ENGINEER No. 23067 01/13/23 BAMFORTH

SEAL

BAMFORTH ENGINEERS + SURVEYORS

A/E INFO

APPROVED

FOR COMMANDER NAVFAC

ACTIVITY

Approved by J. Scott Roberts, Asset Management Branch Head & Supervisory Facility Planner, PWD Beaufort, SC via email.

SATISFACTORY TO DATE 12/15/2022

DES	CAB	DRW	CAD	CHK	ALB

PM/DM	KTB/RLH
BRANCH MANAGER	DLB
CHIEF ENG/ARCH	EJA
FIRE PROTECTION	DSN

DEPARTMENT OF THE NAVY
NAVAL FACILITIES ENGINEERING SYSTEMS COMMAND
NAVAL FACILITIES ENGINEERING SYSTEMS COMMAND - MID-ATLANTIC NORFOLK, VA
DC CORE
MCAS BEAUFORT
BEAUFORT, SC
P-475 AIRCRAFT MAINTENANCE HANGAR - VOLUME 1 (BASE BID WITH OPTIONS)
DETAILS

SCALE: NONE
EPROJECT NO.: 1363603
CONSTR. CONTR. NO.
NAVFAC DRAWING NO. 12859250
SHEET 78 OF 1412

CS504

DRAWFORM REVISION: 25 AUGUST 2020

FILE NAME: K:\Jobs\20021\BMSA 10-02-25\BLDG-P475-1363603-CS504.dwg LAYOUT NAME: CS504 PLOTTED: Thursday, November 06, 2025 - 2:19pm USER: mlw

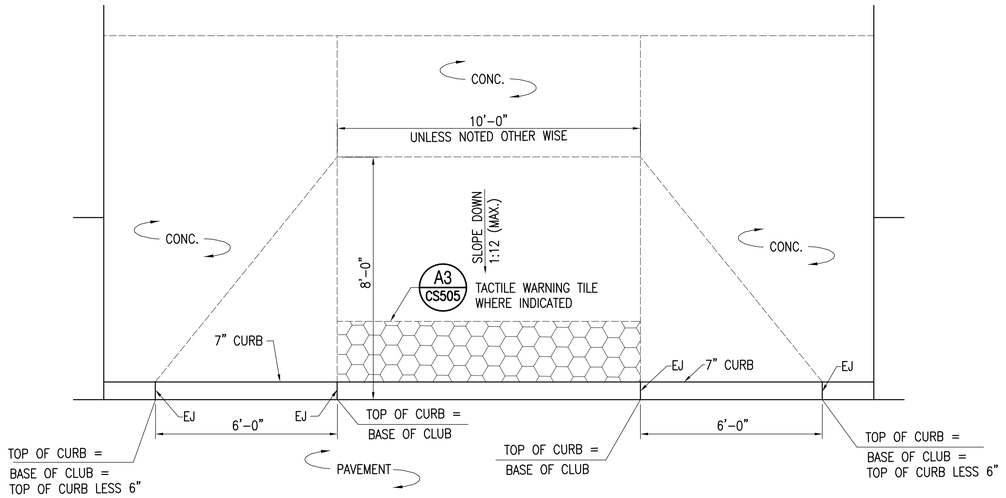

C1 CURB RAMP
(TYPE 1)
N.T.S.

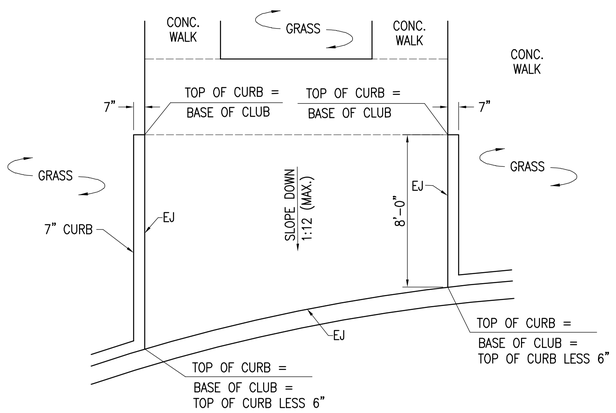

B1 CURB RAMP
(TYPE 6)
N.T.S.

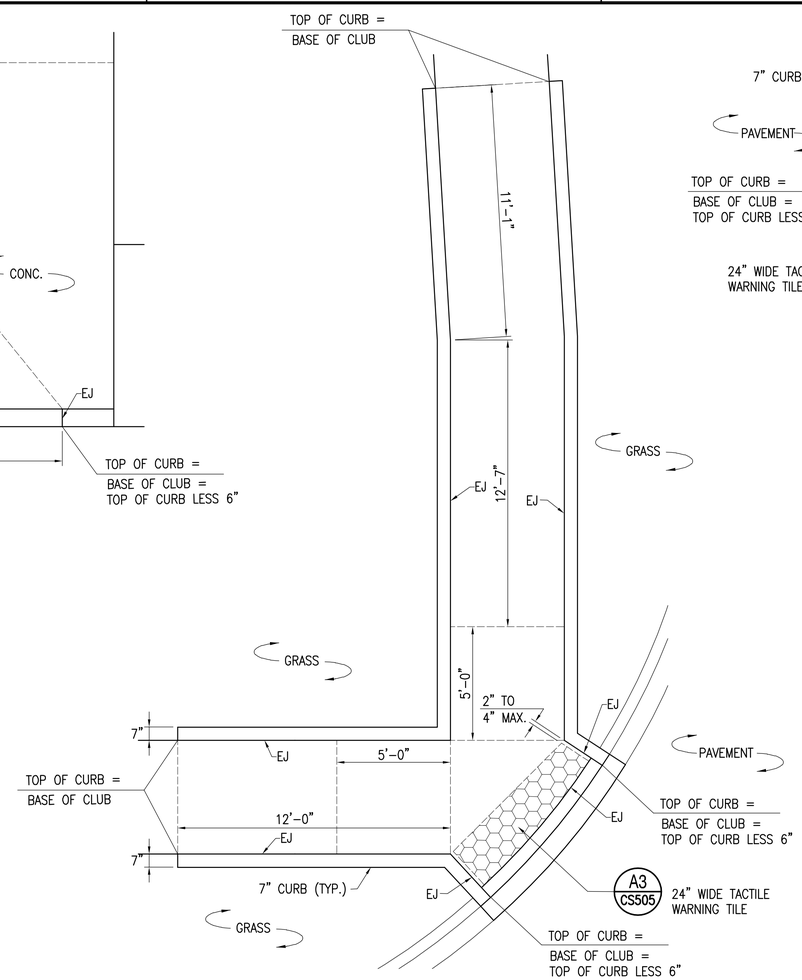

B3 CURB RAMP
(TYPE 5)
N.T.S.

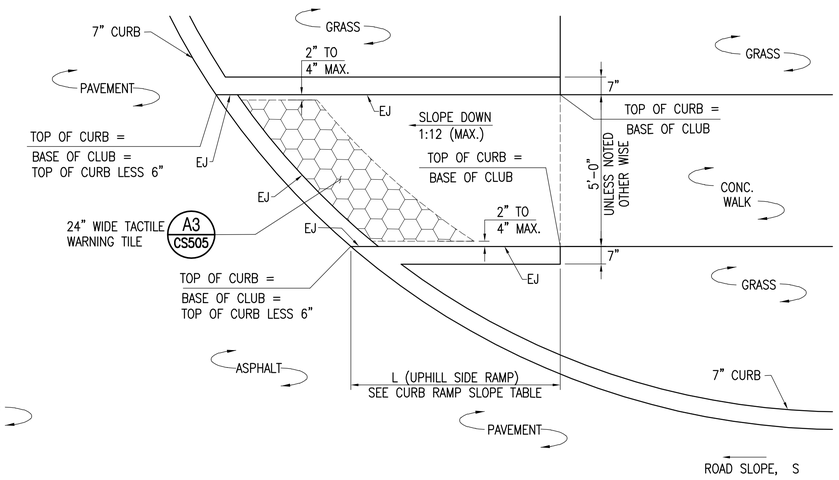

C4 CURB RAMP
(TYPE 3)
N.T.S.

CURB RAMP SLOPE TABLE

ROAD SLOPE, S (%)	L, (UP HILLSIDE RAMP), (FT.)
S ≤ 1%	7'-0"
1% > S ≤ 3%	10'-0"
S > 1%	15'-0"

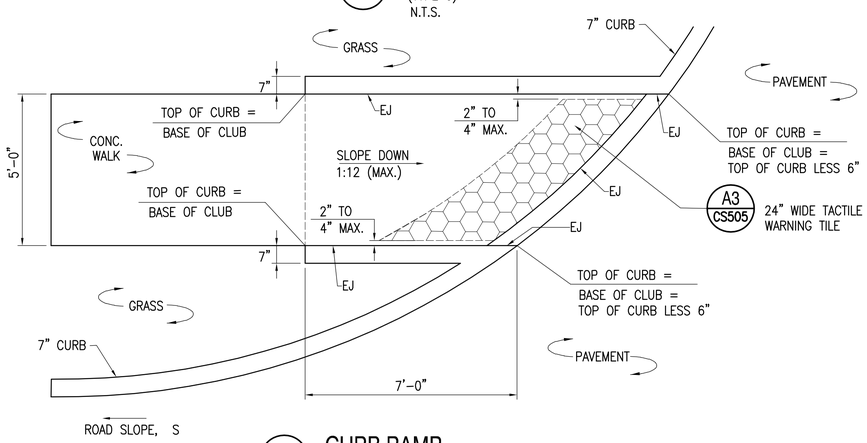

A1 CURB RAMP
(TYPE 2)
N.T.S.

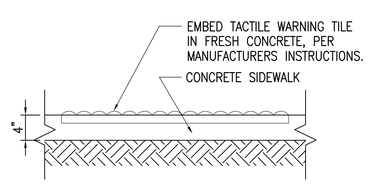

A3 TACTILE WARNING TILE DETAIL
N.T.S.

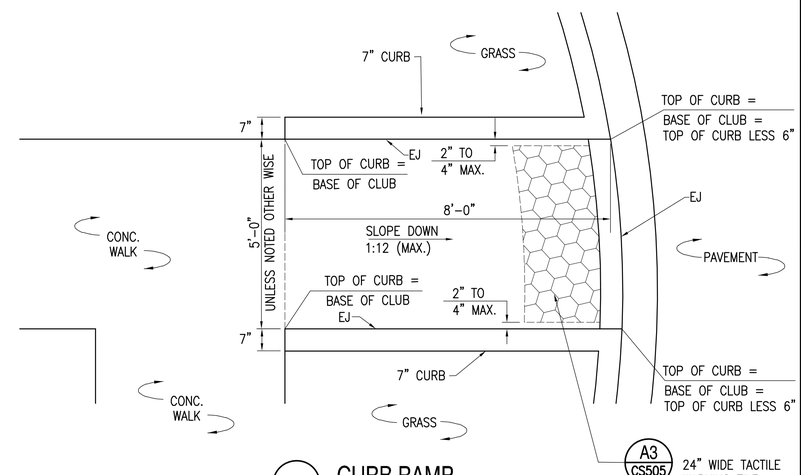

A4 CURB RAMP
(TYPE 4)
N.T.S.

SYM	DESCRIPTION	DATE	APPR
MOD P00006 AND MOD P00007		10/2025	
MOD P00005		05/2023	

NAVFAC

SOUTH CAROLINA
No. 23067
01/13/23
SEAL

BAMFORTH
ENGINEERS + SURVEYORS

A/E INFO

APPROVED
FOR COMMANDER NAVFAC

ACTIVITY
Approved by J. Scott Roberts, Asset Management Branch Head & Supervisory Facility Planner, PWD Beaufort, SC via email.

SATISFACTORY TO DATE 12/15/2022

DES	CAB	DRW	CAD	CHK	ALB

PM/DM	KTB/RLH
BRANCH MANAGER	DLB
CHIEF ENG/ARCH	EJA
FIRE PROTECTION	DSN

DEPARTMENT OF THE NAVY
NAVAL FACILITIES ENGINEERING SYSTEMS COMMAND
NAVAL FACILITIES ENGINEERING SYSTEMS COMMAND - MID-ATLANTIC
NORFOLK, VA
DC CORE
MCAS BEAUFORT
BEAUFORT, SC
P-475 AIRCRAFT MAINTENANCE HANGAR - VOLUME 1 (BASE BID WITH OPTIONS)
DETAILS

SCALE: NONE
EPROJECT NO.: 1363603
CONSTR. CONTR. NO.
NAVFAC DRAWING NO. 12859251
SHEET 79 OF 1412

CS505

DRAWFORM REVISION: 25 AUGUST 2020

FILE NAME: K:\jobs\20021\BJASA 10-02-25\BLDG-P475-1363603-CS505.dwg LAYOUT NAME: CS505 PLOTTED: Thursday, November 06, 2025 - 2:19pm USER: mlw

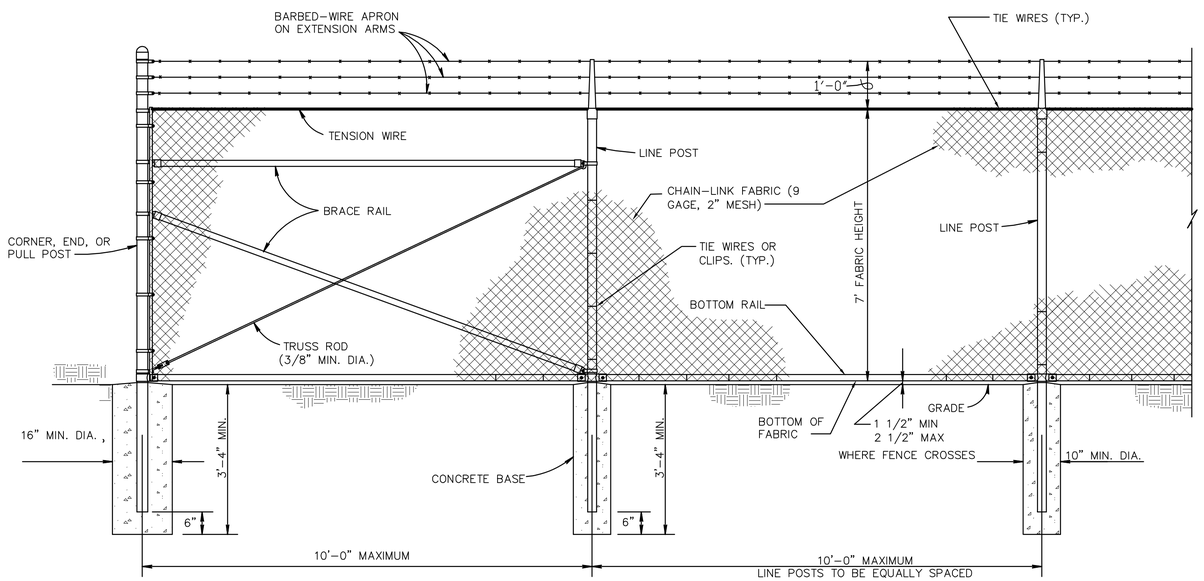

C1 CHAIN-LINK RESTRICTED AREA SECURITY FENCE DETAIL

SCALE: NTS

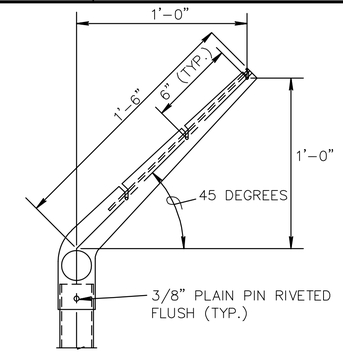

LINE POST

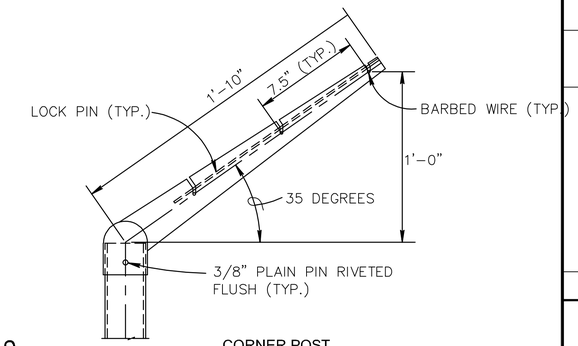

CORNER POST

C3 EXTENSION ARM DETAILS

SCALE: NTS

NOTE: FOR THIS PROJECT CORNER POST SHALL BE VERTICAL AS SHOWN ON PEDESTRIAN GATE IN PHOTO IMG0611 SHOWN ON SHEET CV801.

STEEL POST SCHEDULE	
USE AND SECTION	MINIMUM OUTSIDE DIMENSIONS (NOMINAL) FABRIC HEIGHT 84"
CORNER, END & PULL POSTS	
TUBULAR – ROUND	2.875" O.D.
TUBULAR – SQUARE	2.50" SQ.
C-SECTION (ROLL-FORMED)	3.50" X 3.50"
LINE POSTS	
TUBULAR – ROUND	2.375" O.D.
H-SECTION	2.25" X 1.70"
C-SECTION (ROLL-FORMED)	2.25" X 1.70"
TOP, BOTTOM & BRACE RAILS	
TUBULAR – ROUND	1.66" O.D.
TUBULAR – SQUARE	1.50" SQ.
H-SECTION	1.625" X 1.50"
C-SECTION (ROLL-FORMED)	1.625" X 1.25"

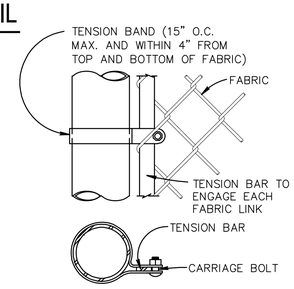

END OR GATE POST DETAIL

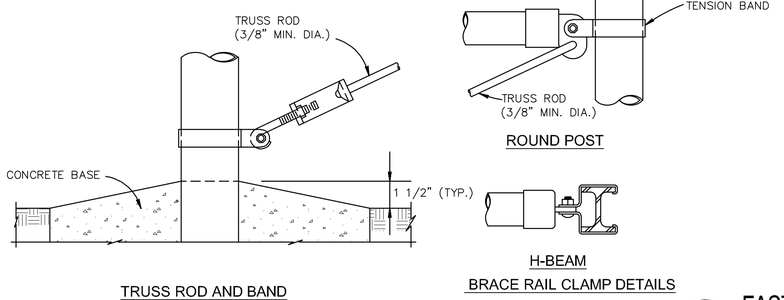

TRUSS ROD AND BAND

ROUND POST

BRACE RAIL CLAMP DETAILS

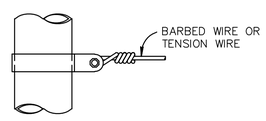

TENSION BAND DETAIL

B1 FASTENING DETAILS

SCALE: NTS

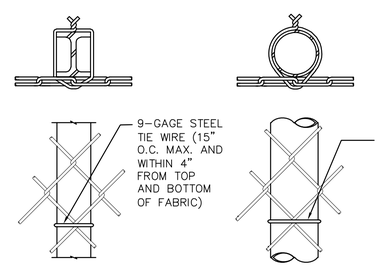

H-BEAM

ROUND POST

B2 LINE POST ATTACHMENTS

SCALE: NTS

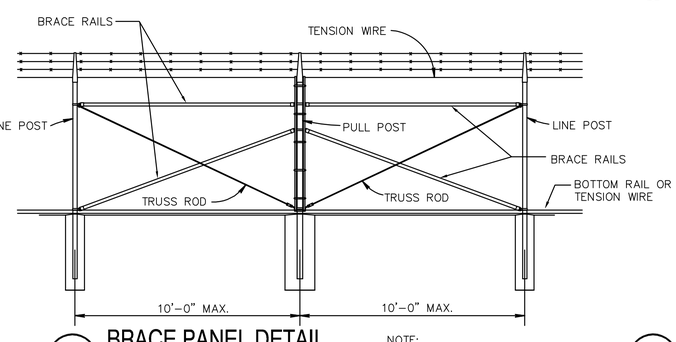

A1 BRACE PANEL DETAIL

SCALE: NTS

NOTE:
PROVIDE BRACE PANEL WHENEVER STRAIGHT RUNS EXCEED 500 FEET.

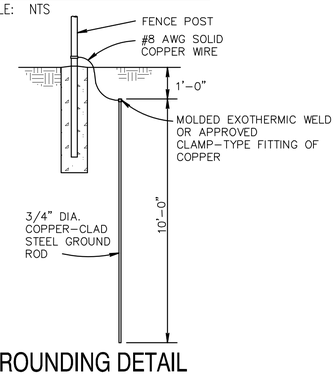

A2 GROUNDING DETAIL

SCALE: NTS

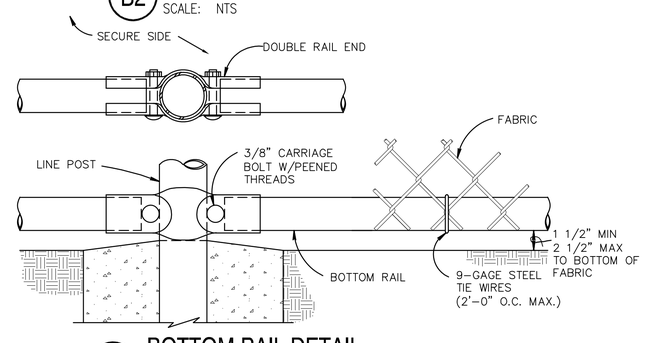

A4 BOTTOM RAIL DETAIL

SCALE: NTS

NOTES:

1. DETAILS SHOWN ARE TO CLARIFY REQUIREMENTS AND ARE NOT INTENDED TO LIMIT OTHER TYPES OF FENCE SECTIONS AND METHODS OF INSTALLATION THAT COMPLY WITH THE SPECIFICATIONS.
2. WIRE TIES, RAILS, POSTS, AND BRACES MUST BE CONSTRUCTED ON THE SECURE SIDE OF THE FENCE ALIGNMENT. CHAIN-LINK FABRIC MUST BE PLACED ON THE SIDE OPPOSITE THE SECURE AREA.
3. C-SECTION POSTS MUST BE INSTALLED SO THAT THE VOID INSIDE THE POST IS COMPLETELY FILLED WITH CONCRETE UP TO THE TOP OF THE FOUNDATION.
4. BOTTOM RAIL MUST BE ATTACHED TO DOUBLE RAIL ENDS USING 3/8" CARRIAGE BOLTS AS SHOWN.
5. PEEN THREADED FASTENERS INSIDE THE RESTRICTED AREA.
6. GROUND FENCES ON EACH SIDE OF ALL GATES.

FENCE LEGEND:

UNLESS OTHERWISE NOTED ON THE PLANS, RESTRICTED AREA FENCE IS:

CHAIN-LINK SECURITY FENCE WITH BARBED-WIRE ON SINGLE OUTRIGGER, TOP TENSION WIRE AND BOTTOM RAIL, AND FENCE FABRIC HEIGHT OF 84 INCHES. FENCE FABRIC, POLES, TENSION WIRE RAILS, AND COMPONENTS MUST BE VINYL COATED, BLACK.

SYM	DESCRIPTION	DATE	APPR.
	MOD P00006 AND MOD P00007	10/2025	
	MOD P00005	05/2023	

NAVFAC

SOUTH CAROLINA PROFESSIONAL ENGINEER No. 23067 01/13/23 BAMFORTH

SEAL

BAMFORTH ENGINEERS + SURVEYORS

A/E INFO

APPROVED

FOR COMMANDER NAVFAC

ACTIVITY

Approved by J. Scott Roberts, Asset Management Branch Head & Supervisory Facility Planner, PWD Beaufort, SC via email.

SATISFACTORY TO DATE 12/15/2022

DES	CAB	DRW	CAD	CHK	ALB
PM/DM	KTB/RLH				
BRANCH MANAGER	DLB				
CHIEF ENG/ARCH	EJA				
FIRE PROTECTION	DSN				

DEPARTMENT OF THE NAVY
NAVAL FACILITIES ENGINEERING SYSTEMS COMMAND
NAVAL FACILITIES ENGINEERING SYSTEMS COMMAND - MID-ATLANTIC
NORFOLK, VA
DC-CORE
MCAS BEAUFORT
BEAUFORT, SC

P-475 AIRCRAFT MAINTENANCE HANGAR - VOLUME 1 (BASE BID WITH OPTIONS)

DETAILS – RESTRICTED AREA FENCING

SCALE: NONE

EPROJECT NO.: 1363603

CONSTR. CONTR. NO.

NAVFAC DRAWING NO. 12859252

SHEET 80 OF 1412

CS506

DRAWFORM REVISION: 25 AUGUST 2020

FILE NAME: K:\jobs\20021\BUMSA 10-02-25\BLDG-P475-1363603-CS506.dwg LAYOUT NAME: CS506 PLOTTED: Wednesday, November 12, 2025 - 1:31pm USER: mtw

POST AND MOUNTING SHALL BE AS SHOWN IN DETAIL C1 / C504

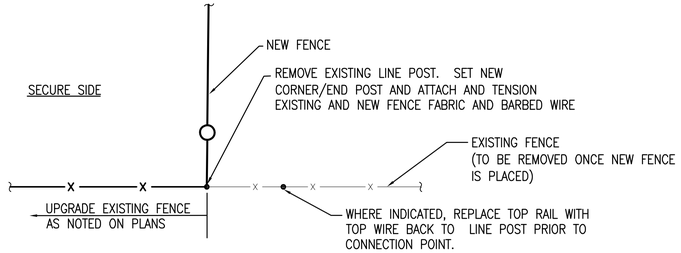

FENCE CONNECTION AT EXISTING LINE POST (C2)

SCALE: NTS

POST AND MOUNTING SHALL BE AS SHOWN IN DETAIL C1 / C504

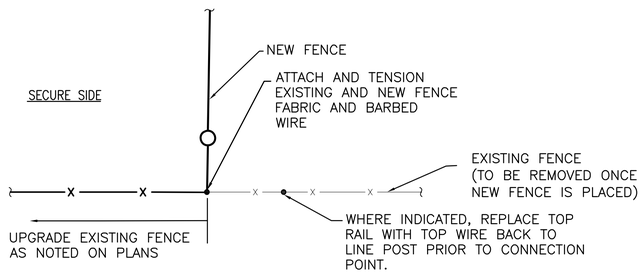

FENCE CONNECTION AT EXISTING CORNER POST (B2)

SCALE: NTS

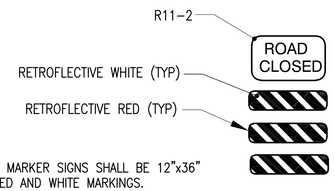

NOTES:

1. REFLECTIVE OBJECT MARKER SIGNS SHALL BE 12"x36" WITH REFLECTIVE RED AND WHITE MARKINGS.
2. ROAD CLOSED SIGN AND REFLECTIVE MARKERS SHALL BE PLACED ON BOTH SIDES OF GATE.

ROAD CLOSED SIGN DETAIL (C5)

SCALE: NTS

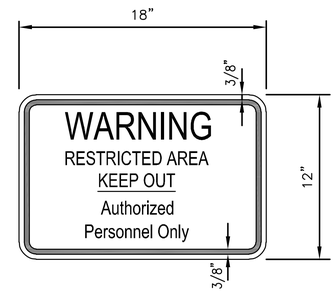

LETTERS AND BORDER: BLACK
BACKGROUND: WHITE
BORDER WIDTH: 3/8"
BORDER RADIUS: 1 1/2"

NOTES:

1. ALL WORDS EXCEPT "WARNING" TO BE IN BLACK AND 1 1/2" HEIGHT. THE WORD "WARNING" MUST BE IN RED AND 2 1/2" HEIGHT.
2. INSTALL SIGNS AT INTERVALS NOT TO EXCEED 100 FEET ON ALL NEW FENCE AND ALL NEW UPGRADED FENCE.
3. INSTALL SIGNS 48" ABOVE GRADE.
4. ANCHOR WITH A MINIMUM OF ONE WIRE TIE AT EACH CORNER.
5. FENCE SIGNS MUST BE ALUMINUM, 80 MIL THICKNESS. NO REFLECTIVITY REQUIRED.
6. SIGN MUST BE PLACED ON OUTSIDE OF FENCE FOR VISIBILITY.
7. REFER TO SHEET CV802/A1 FOR PHOTO OF EXISTING SIGN WHICH EXEMPLIFIES REQUIRED SIGN.

FENCE SIGN DETAIL (A5)

SCALE: NTS

STM	DESCRIPTION	DATE	APPR.
	MOD P00006 AND MOD P00007	10/2025	
	MOD P00005	05/2023	

NAVFAC

SOUTH CAROLINA No. 23067 01/13/23 BAMFORTH

SEAL

BAMFORTH ENGINEERS + SURVEYORS

A/E INFO

APPROVED

FOR COMMANDER NAVFAC

ACTIVITY

Approved by J. Scott Roberts, Asset Management Branch Head & Supervisory Facility Planner, PWD Beaufort, SC via email.

SATISFACTORY TO DATE 12/15/2022

DES	CAB	DRW	CAD	CHK	ALB
PM/DM	KTB/RLH				
BRANCH MANAGER	DLB				
CHIEF ENG/ARCH	EJA				
FIRE PROTECTION	DSN				

DEPARTMENT OF THE NAVY
NAVAL FACILITIES ENGINEERING SYSTEMS COMMAND
NAVAL FACILITIES ENGINEERING SYSTEMS COMMAND - MID-ATLANTIC
NORFOLK, VA
DC CORE
MCAS BEAUFORT
BEAUFORT, SC
P-475 AIRCRAFT MAINTENANCE HANGAR - VOLUME 1 (BASE BID WITH OPTIONS)
DETAILS – RESTRICTED AREA FENCING

SCALE: NONE
EPROJECT NO.: 1363603
CONSTR. CONTR. NO.
NAVFAC DRAWING NO. 12859253
SHEET 81 OF 1412
CS507

DRAWFORM REVISION: 25 AUGUST 2020

FILE NAME: K:\Jobs\20021\BJMSA 10-02-25\BLDG-P475-1363603-CS507.dwg LAYOUT NAME: CS507 PLOTTED: Thursday, November 06, 2025 - 2:19pm USER: mtk

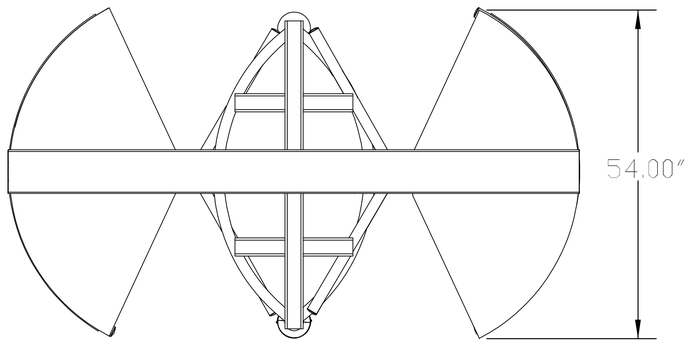

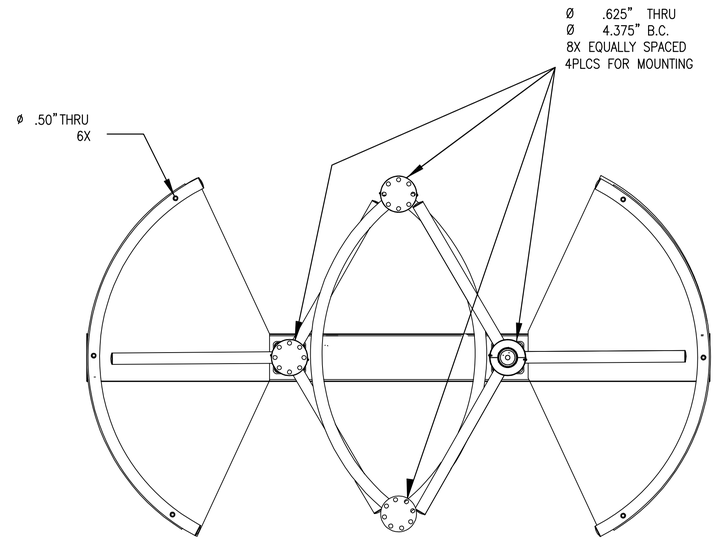

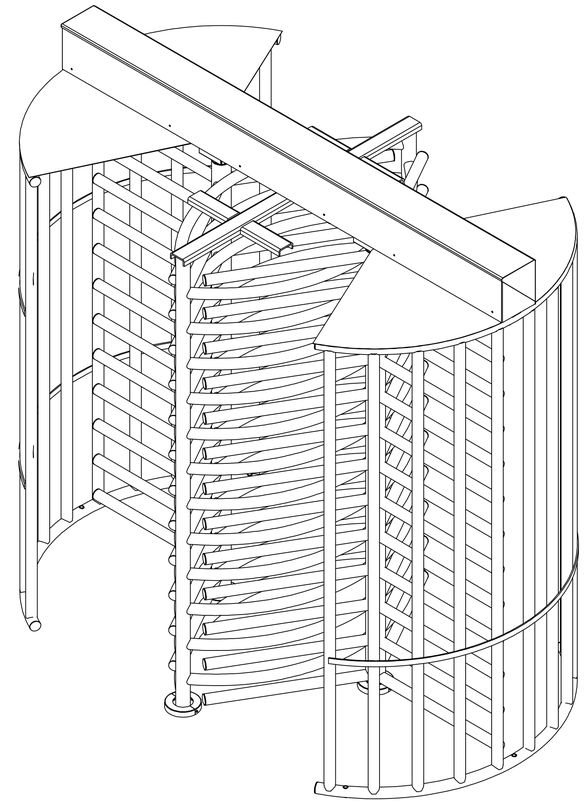

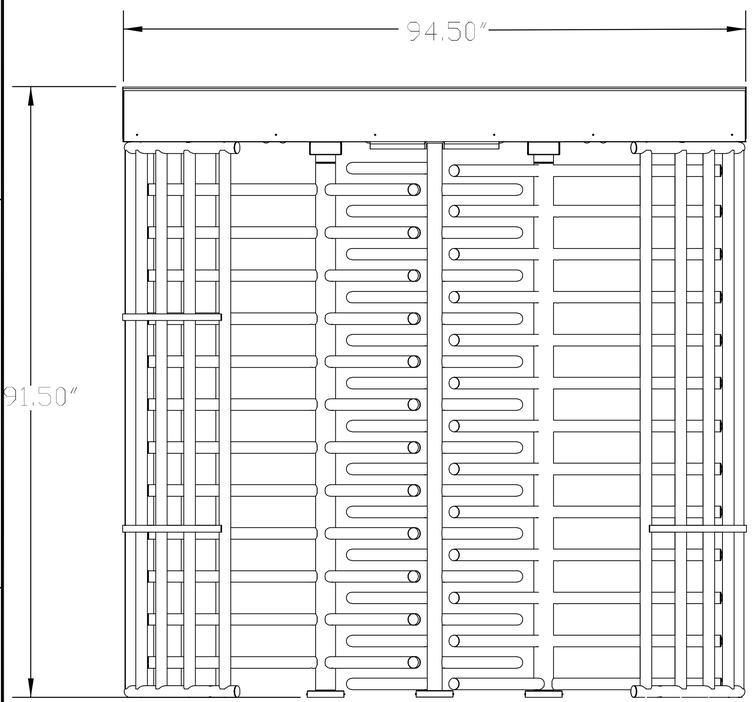

TANDEM TURNSTILE

SCALE: NTS

A1

TURNSTILE NOTES:

1. TURNSTILE SHALL BE COMPOSED OF CARBON STEEL. ALL MATERIALS SHALL BE HOT-DIPPED GALVANIZED.
2. TURNSTILE SHALL HAVE BI-DIRECTIONAL CONTROLS: IN THE CASE OF A POWER FAILURE, OUTBOUND TRAFFIC SHALL BE SET TO "FAIL SAFE"; THE INBOUND TRAFFIC WILL HAVE A "FAIL LOCK" MECHANISM (UNLESS OTHERWISE DIRECTED BY THE ACTIVITY VIA THE CONTRACTING OFFICER).
3. PROVIDE CARD READER MOUNTING PLATES FOR BOTH SIDES (INBOUND & OUTBOUND) OF TURNSTILE. CARD READER WILL BE INSTALLED BY NWIC.
4. BRACE BARRIER POST AT TOP TO ADJACENT VERTICAL SURFACE.
5. ALLOW 5 INCH CLEARANCE ABOVE TOP OF TURNSTILE TO REMOVE LIFT-OFF TYPE TOP COVER.
6. CONCRETE MOUNTING SLAB MUST BE LEVEL WITHIN 1/4". SEE DETAILS ON SHEET CS509 FOR CONCRETE MOUNTING PAD.
7. CONTRACTOR SHALL PROVIDE AN ELECTRICAL 3-ROTOR FULL HEIGHT TURNSTILE.
8. TURNSTILE SHALL HAVE POWDER COATED BLACK FINISH TO MATCH FENCE.
9. CAC CARD READERS WILL BE PROVIDED BY NWIC UNDER SEPARATE CONTRACT. PROVIDE CARD READER BRACKETS OF SAME MATERIAL AND FINISH AS TURNSTILE.
10. ALL DIMENSIONS PROVIDED ARE APPROXIMATE.

PEDESTRIAN GATE SIGN NOTES:

1. PROVIDE ONE SET OF 3 SIGNS SHOWN IN IMAGE 0696 SHEET CV801 AT EACH TURNSTILE (2 SETS AT DOUBLE TURNSTILE).
2. DURING DEMOLITION OPERATIONS SALVAGE SIGNS FOR USE AS TEMPLATES FOR NEW SIGNS.
3. ANCHOR WITH A MINIMUM OF ONE WIRE TIE AT EACH CORNER.
4. FENCE SIGNS MUST BE ALUMINUM, 80 MIL THICKNESS. NO REFLECTIVITY REQUIRED.
5. SIGN MUST BE PLACED ON OUTSIDE OF FENCE FOR VISIBILITY.
6. CONFIRM EXACT LOCATION OF SIGN PLACEMENTWITH CONTRACTING OFFICER.

SYM	DESCRIPTION	DATE	APPR.
	MOD P00006 AND MOD P00007	10/2025	
	MOD P00005	05/2023	

NAVFAC

SOUTH CAROLINA PROFESSIONAL ENGINEER No. 23067 01/13/23 BAMFORTH

SEAL

BAMFORTH ENGINEERS + SURVEYORS

A/E INFO

APPROVED

FOR COMMANDER NAVFAC

ACTIVITY

Approved by J. Scott Roberts, Asset Management Branch Head & Supervisory Facility Planner, PWD Beaufort, SC via email.

SATISFACTORY TO DATE 12/15/2022

DES	CAB	DRW	CAD	CHK	ALB

PM/DM	KTB/RLH
BRANCH MANAGER	DLB
CHIEF ENG/ARCH	EJA
FIRE PROTECTION	DSN

DEPARTMENT OF THE NAVY
NAVAL FACILITIES ENGINEERING SYSTEMS COMMAND
NAVAL FACILITIES ENGINEERING SYSTEMS COMMAND - MID-ATLANTIC NORFOLK, VA
DC-CORE
MCAS BEAUFORT
BEAUFORT, SC

P-475 AIRCRAFT MAINTENANCE HANGAR - VOLUME 1 (BASE BID WITH OPTIONS)

DETAILS – RESTRICTED AREA FENCING

SCALE: NONE

EPROJECT NO.: 1363603

CONSTR. CONTR. NO.

NAVFAC DRAWING NO.
12859254

SHEET 82 OF 1412

CS508

DRAWFORM REVISION: 25 AUGUST 2020

FILE NAME: K:\Jobs\20021\BMSA 10-02-25\BLDG-P475-1363603-CS508.dwg LAYOUT NAME: CS508 PLOTTED: Thursday, November 06, 2025 - 5:03pm USER: mtw

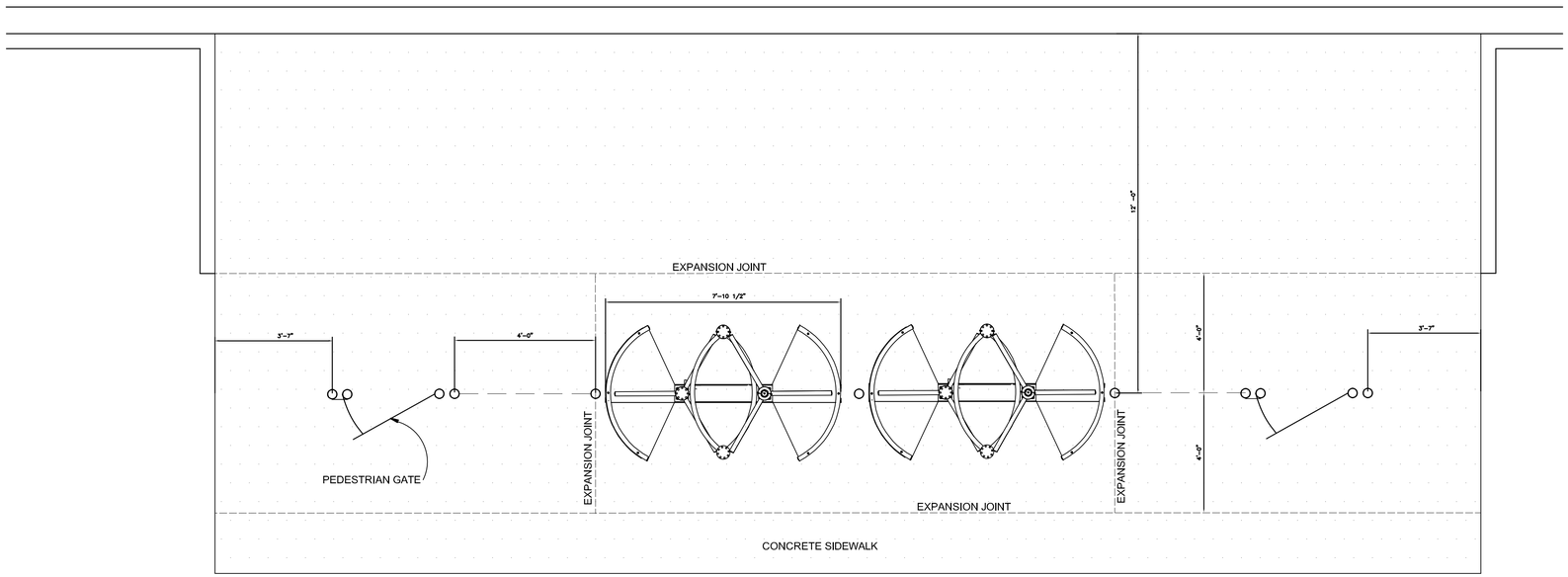

B2 TYP. DOUBLE TANDEM TURNSTILE ECP
PLAN VIEW SCALE: NTS

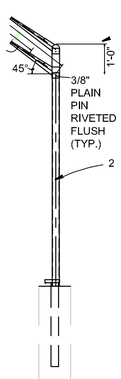

POST DETAIL

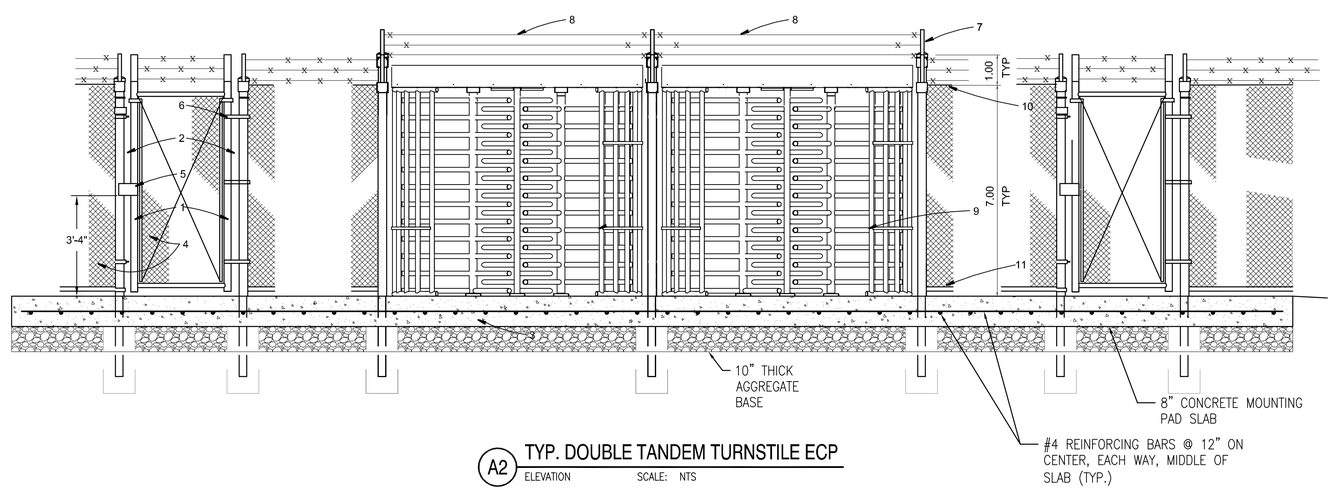

A2 TYP. DOUBLE TANDEM TURNSTILE ECP
ELEVATION SCALE: NTS

MARK	DESCRIPTION	NOTES:
1	GATE FRAME	BLACK
2	FENCE POST	BLACK
3	8" THICK SLAB	
4	CHAIN LINK FABRIC	PVC COATED-BLACK
5	ELECTRIC LOCK	CAC ACTIVATED
6	SELF CLOSING ADJ GATE HINGE	3 REQUIRED
7	FENCE POST W/ DBL "Y" TOP	AT TURNSTILES ONLY
8	BARBED WIRE TOP	6 STRANDS
9	TURNSTILE	BLACK
10	TOP TENSION WIRE	PVC COATED-BLACK
11	BOTTOM TENSION RAIL	BLACK

NOTES:

1. FOR NON-SENSORED FENCES, DETAILS SHOWN ARE TO CLARIFY REQUIREMENTS AND ARE NOT INTENDED TO LIMIT OTHER TYPE OF FENCE SECTIONS AND METHODS OF INSTALLATION THAT COMPLY WITH THE SPECIFICATIONS.
2. SWING GATES MUST BE CONSTRUCTED AS NOTED. A MINIMUM CLEAR OPENING OF 36" IS REQUIRED.
3. ALL GATE FRAMES MUST MEET THE MINIMUM REQUIREMENTS OF ASTM F900 1.90" NOMINAL (ROUND) OR 2.00" NOMINAL (SQUARE). GATE FRAMES MUST BE OF WELDED CONSTRUCTION OR MUST BE ASSEMBLED USING HEAVY FITTINGS. AT CONTRACTOR'S OPTION A WELDED HORIZONTAL BRACE MAY BE USED IN LIEU OF TRUSS RODS TO BRACE ALL-WELDED GATE FRAMES. THE CONTRACTOR MUST BE RESPONSIBLE FOR THE PROPER RIGID CONSTRUCTION OF ALL GATES SUPPLIED.
4. GATES MUST BE DESIGNATED AS FOLLOWS:
   FENCE TYPE – RESTRICTED AREA
   FENCE HEIGHT – 8 FEET
   OPENING – 3 FEET MINIMUM CLEAR OPENING
5. PROVIDE BRACE RAILS AND TRUSS RODS AS REQUIRED.
6. ON EACH SIDE OF GATE, PROVIDE POST FOR JUNCTION FOR GATE OPERATOR OFFSET FROM GATE OPENING FOR ADA COMPLIANCE.
7. GATE MUST UTILIZE AN ELECTRIC STRIKE LOCKING SYSTEM.
8. REFER TO CS101 FOR LAYOUT INFORMATION.
9. PROVIDE EXTENSION ARM TRANSITION TO VERTICAL AS SHOWN ON PEDESTRAIN GATE IN PHOTO IMG0611 SHOWN ON SHEET CV801.

PEDESTRIAN GATE SIGN NOTES:

1. PROVIDE ONE SET OF 3 SIGNS SHOWN IN IMAGE 0696 SHEET CV802 AT EACH TURNSTILE (2 SETS AT DOUBLE TURNSTILE).
2. DURING DEMOLITION OPERATIONS SALVAGE SIGNS FOR USE AS TEMPLATES FOR NEW SIGNS.
3. ANCHOR WITH A MINIMUM OF ONE WIRE TIE AT EACH CORNER.
4. FENCE SIGNS MUST BE ALUMINUM, 80 MIL THICKNESS. NO REFLECTIVITY REQUIRED.
5. SIGN MUST BE PLACED ON OUTSIDE OF FENCE FOR VISIBILITY.
6. CONFIRM EXACT LOCATION OF SIGN PLACEMENTWITH CONTRACTING OFFICER.

SYM	DESCRIPTION	DATE	APPR
	MOD P00006 AND MOD P00007	10/2025	
	MOD P00005	05/2023	

NAVFAC

SOUTH CAROLINA PROFESSIONAL ENGINEER No. 23067 01/13/23 BAMFORTH SEAL

BAMFORTH ENGINEERS + SURVEYORS

A/E INFO

APPROVED
FOR COMMANDER NAVFAC

ACTIVITY
Approved by J. Scott Roberts, Asset Management Branch Head & Supervisory Facility Planner, PWD Beaufort, SC via email.

SATISFACTORY TO DATE 12/15/2022

DES	CAB	DRW	CAD	CHK	ALB

PM/DM KTB/RLH
BRANCH MANAGER DLB
CHIEF ENG/ARCH EJA
FIRE PROTECTION DSN

DEPARTMENT OF THE NAVY
NAVAL FACILITIES ENGINEERING SYSTEMS COMMAND
DC CODE
MCAS BEAUFORT
NAVAL FACILITIES ENGINEERING SYSTEMS COMMAND - MID-ATLANTIC
NORFOLK, VA
BEAUFORT, SC
P-475 AIRCRAFT MAINTENANCE HANGAR - VOLUME 1 (BASE BID WITH OPTIONS)
DETAILS – RESTRICTED AREA FENCING

SCALE: NONE
EPROJECT NO.: 1363603
CONSTR. CONTR. NO.
NAVFAC DRAWING NO. 12859255
SHEET 83 OF 1412
CS509

DRAWFORM REVISION: 25 AUGUST 2020

FILE NAME: K:\jobs\200211\BJMSA 10-02-25\BLDG-P475-1363603-CS509.dwg LAYOUT NAME: CS507 PLOTTED: Thursday, November 06, 2025 – 5:05pm USER: mtw

CHAIN LINK GATE POST

GATE LEAF WIDTH	GATE POST (O.D.)	FABRIC HEIGHT	"A" DIA.	"B" DEPTH	"C" POST EMBED.
3' TO 6'	2.785"	6' TO 9'	14"	42"	40"

CHAIN LINK LINE AND TERMINAL POSTS

FABRIC HEIGHT	TYPE POST	"A" DIA.	"B" DEPTH	"C" POST EMBEDMENT
7'-0"	LINE	12"	38"	36"
	TERMINAL	12"	38"	36"

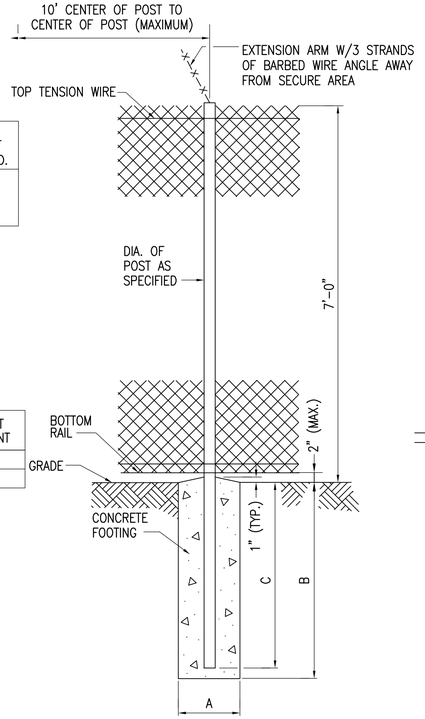

NOTE:
TERMINAL POSTS INCLUDE END, CORNER AND PULL POSTS.

C1 CHAIN LINK FENCE & GATE FOUNDATION
N.T.S.

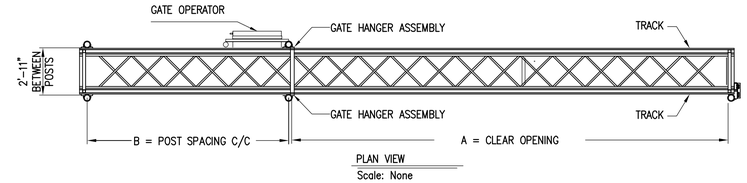

PLAN VIEW
Scale: None

CRITICAL DIMENSION CHART

MARK	DESCRIPTION	FORMULA	DIM.
A	CLEAR OPENING	A	50'-0"
B	COUNTERBALANCE POST SPACING C/C	(A/2)-11"	24'-1"
C	OVERALL GATE LENGTH	A x 1.5	75'-0"
D	COUNTERBALANCE LENGTH	A x 0.5	25"-0"
E	NOMINAL GATE HEIGHT	E	7'-0"
F	POST HEIGHT (W BARB ARMS)	E + 1'-6"	8"-6"

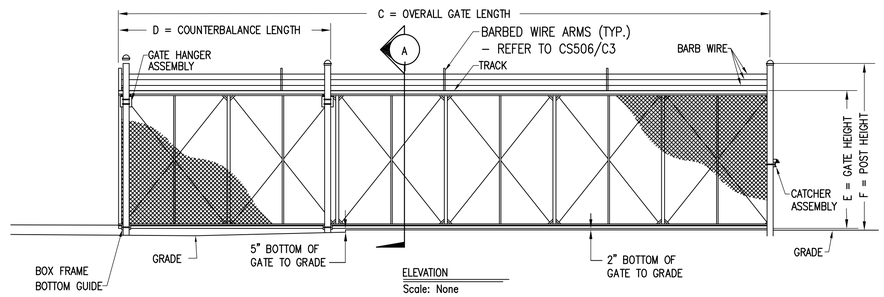

ELEVATION
Scale: None

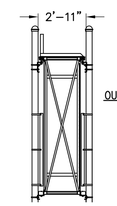

A SECTION A
Scale: None

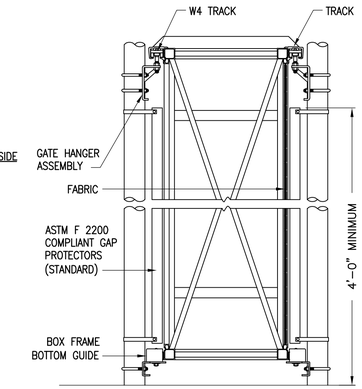

A ENLARGED SECTION A
Scale: None

NOTES:

1. PROVIDE FITTINGS FOR POSTS.
2. PROVIDE BARBED WIRE ARMS (10 FEET MAXIMUM ON CENTER)
3. GATE OPERATOR MUST BE LOCATED ON THE SECURE SIDE OF THE GATE.
4. REFER TO DETAIL A3, THIS SHEET, FOR ADDITIONAL INFORMATION

BOX FRAME CANTILEVER SLIDE GATE FOR RESTRICTED AREA
C4
N.T.S.

GENERAL FENCING NOTES

1. FOOTING DESIGNS BASED ON SOIL BEARING CAPACITY OF 1000 PSF.
2. EXCAVATIONS FOR ALL FOOTINGS MAY BE DONE BY AUGERING, TAKING CARE TO AVOID EXISTING UTILITIES.
3. ALL CONCRETE WORK MUST BE IN ACCORDANCE WITH ACI 318. CONCRETE MUST HAVE A MINIMUM 28-DAY COMPRESSIVE STRENGTH OF 4000 PSI. THE MINIMUM CONCRETE COVER MUST BE 3 INCHES, UNLESS OTHERWISE NOTED.
4. GROUND FENCES ON EACH SIDE OF ALL GATES.
5. REFER TO SITE PLANS ON CIVIL SHEETS FOR GRADES.

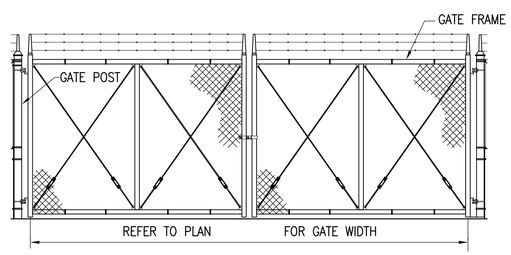

B3 DOUBLE LEAF GATE
N.T.S.

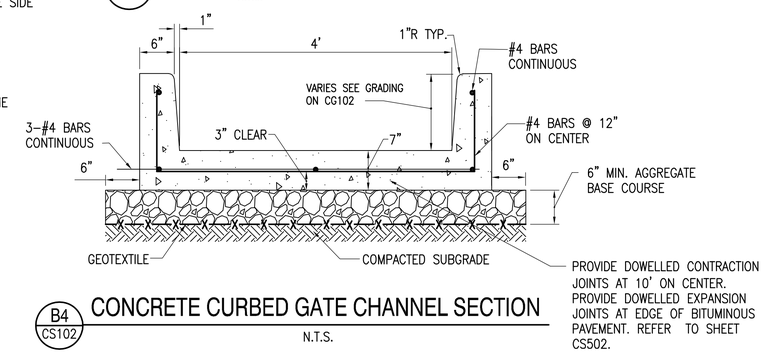

B4 CS102 CONCRETE CURBED GATE CHANNEL SECTION
N.T.S.

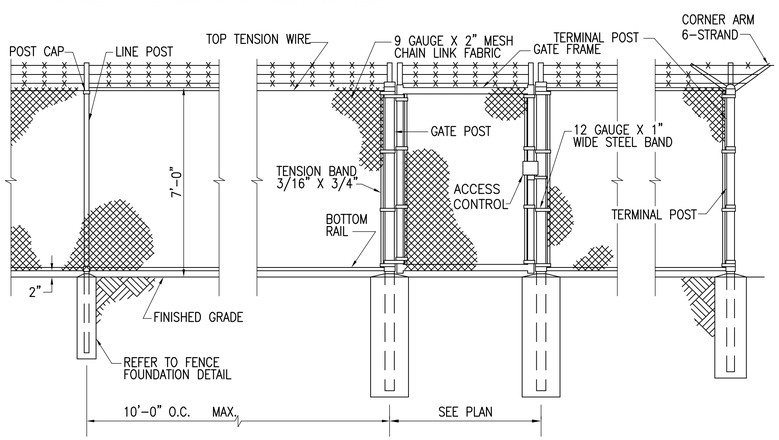

A1 SINGLE LEAF GATE
N.T.S.

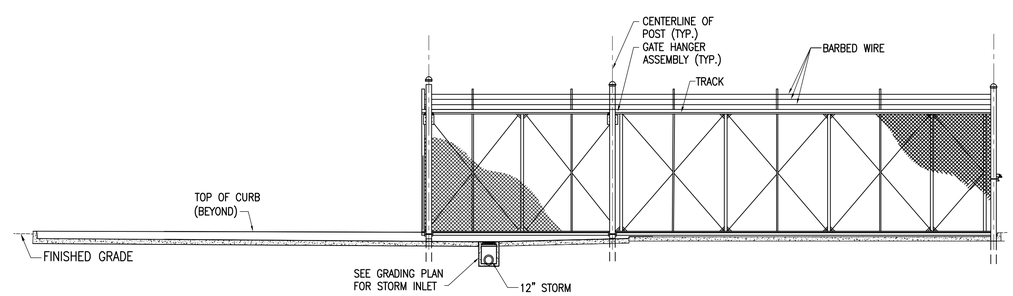

A3 CS102 BOX FRAME CANTILEVER SLIDE GATE SECTION
N.T.S.

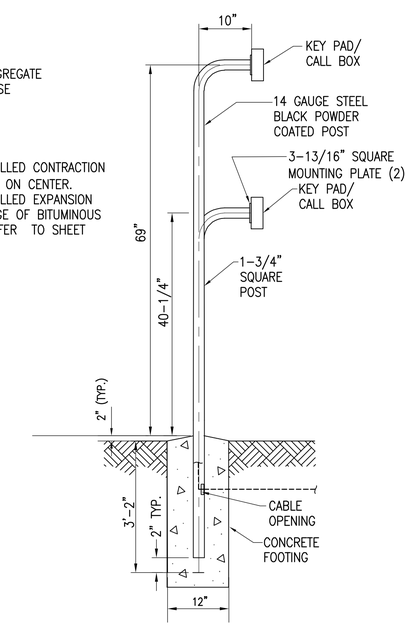

A5 KEY PAD/CARD READER PEDESTAL
N.T.S.

SYM	DESCRIPTION	DATE	APPR.
	MOD P00006 AND MOD P00007	10/2025	
	MOD P00005	05/2023	

NAVFAC

SOUTH CAROLINA PROFESSIONAL ENGINEER No. 23067 01/13/23 ANTHONY L. BAMFORTH SEAL

BAMFORTH ENGINEERS + SURVEYORS

A/E INFO

APPROVED FOR COMMANDER NAVFAC

ACTIVITY
Approved by J. Scott Roberts, Asset Management Branch Head & Supervisory Facility Planner, PWD Beaufort, SC via email.

SATISFACTORY TO DATE 12/15/2022

DES	CAB	DRW	CAD	CHK	ALB
PM/DM	KTB/RLH				
BRANCH MANAGER	DLB				
CHIEF ENG/ARCH	EJA				
FIRE PROTECTION	DSN				

DEPARTMENT OF THE NAVY
NAVAL FACILITIES ENGINEERING SYSTEMS COMMAND
DC-DORE
MCAS BEAUFORT

NAVAL FACILITIES ENGINEERING SYSTEMS COMMAND - MID-ATLANTIC NORFOLK, VA

BEAUFORT, SC

P-475 AIRCRAFT MAINTENANCE HANGAR - VOLUME 1 (BASE BID WITH OPTIONS)

DETAILS – FENCING AND GATES

SCALE: NONE
EPROJECT NO.: 1363603
CONSTR. CONTR. NO.
NAVFAC DRAWING NO. 12859256
SHEET 84 OF 1412

CS510

DRAWFORM REVISION: 25 AUGUST 2020

FILE NAME: K:\jobs\20021\BUMSA 10-02-25\BLDG-P475-1363603-CS510.dwg LAYOUT NAME: CS510 PLOTTED: Tuesday, November 11, 2025 - 1:57pm USER: mlw

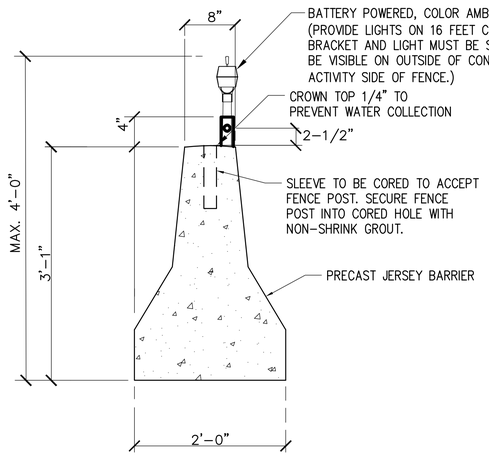

TYPICAL SECTION (WITHOUT FENCE POST SHOWN)

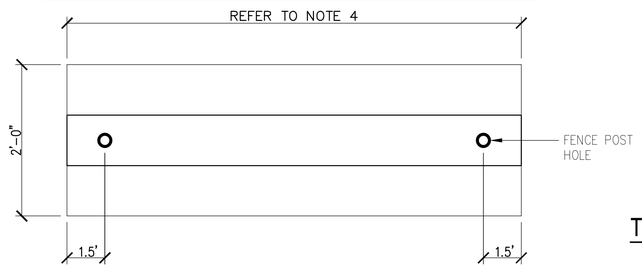

TYPICAL JERSEY BARRIER FENCE PLAN

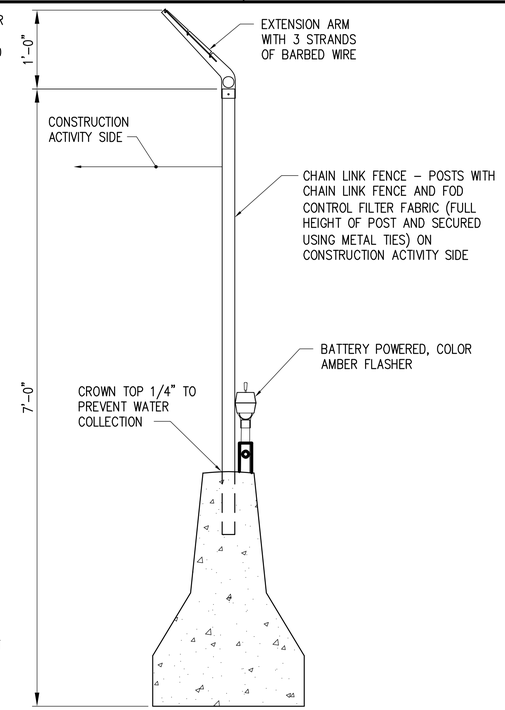

TYPICAL SECTION (WITH FENCE POSTS SHOWN)

NOTES:

1. THE JERSEY BARRIER SERVERS AS BOTH A FOD CONTROL BARRIER AND A RESTRICTED AREA SECURITY FENCE.
2. CONTRACTOR MUST PROVIDE HOLES AND BRACKETS, BOLTS, NUTS AND BRACKETS AS NEEDED TO SECURE CONTRACTOR PROVIDED LIGHTS, FENCE POSTS AND WIRE FENCE FABRIC TO JERSEY BARRIER.
3. PROVIDE 8" WIDE ALTERNATING PAINTED WHITE AND INTERNATIONAL ORANGE STRIPES ON BOTH FRONT AND BACK OF BARRIER. STRIPES MUST BE AT 45' ANGLE.
4. INDIVIDUAL BARRIER LENGTH MUST BE 8'-0".
5. PROVIDE TWO FORKLIFT OPENINGS AT THEIR BASES FOR EACH BARRIER. OPENINGS MUST BE 12" WIDE AND 3" HIGH. OPENINGS MUST BE 3'-4" APART MEASURED CENTERLINE TO CENTERLINE UNLESS OTHERWISE APPROVED BY THE CONTRACTING OFFICER.
6. PROVIDE PLUGS FOR FORKLIFT OPENINGS AT ALL TIMES WHEN BARRIER IS IN USE. PLUGS MUST BE APPROVED BY CONTRACTING OFFICER. PLUGS MAY BE BOLTED PLYWOOD OR FILTER FABRIC.
7. PROVIDE AND SECURE FILTER FABRIC ON BARRIER SIDE FACING CONSTRUCTION TO SEAL GAPS WITHIN AND BETWEEN BARRIERS.
8. CONTRACTOR TO PROVIDE LIGHTS AND BATTERIES, AS NEEDED, FOR LIGHTS THROUGHOUT CONSTRUCTION.
9. THE CONTRACTOR MUST MAINTAIN ALL BARRIERS IN GOOD CONDITION AND SHOULD REPLACE ANY BARRIERS DAMAGED DUE TO CONTRACTOR ACTIVITY AT NO ADDITIONAL EXPENSE TO THE GOVERNMENT.
10. THE CONTRACTOR MUST INSTALL, RE-ARRANGE AND MAINTAIN ALL BARRIERS THROUGHOUT THE PROJECT DURATION AND REMOVE THE BARRIERS AT CONCLUSION OF WORK.
11. CONTRACTOR MUST FIX, REPAIR, AND MAINTAIN LIGHTS (FLASHER UNITS) ON ALL BARRIERS USED ON THE PROJECT.

B1 JERSEY BARRIER (JB DETAIL)

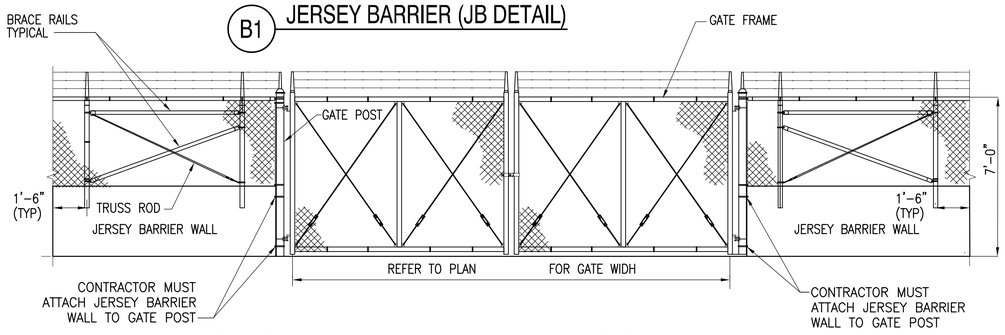

NOTE: THE CONTRACTOR MUST PROVIDE ADDITIONAL SUPPORTS AND BRACING AS NEEDED TO PROVIDE AND MAINTAIN THE GATE THROUGHOUT CONSTRUCTION. THE ADDITIONAL SUPPORTS/BRACING MUST NOT DAMAGE THE APRON PAVEMENT. ALL GATES MUST MEET THE APPROVAL OF AIR OPS AND THE CONTRACTING OFFICER.

A1 TEMPORARY DOUBLE LEAF GATE

N.T.S.

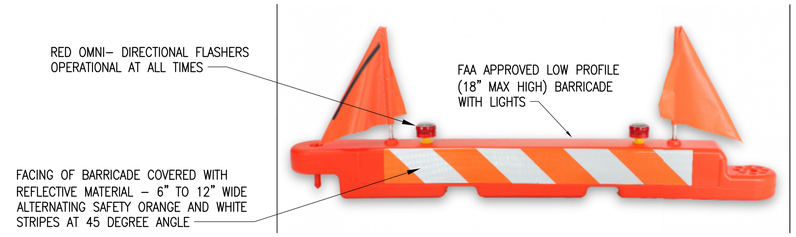

NOTES:

1. PROVIDE BARRIERS WITH LIGHTS (FLAGS ARE NOT REQUIRED) AND MAINTAIN THEM THROUGHOUT CONSTRUCTION. CHECK BARRIER LIGHTING DAILY.
2. THE BARRIER MUST BE WEIGHTED USING PLASTIC LINED BURLAP SANDBAGS AND MEET THE APPROVAL OF AIR OPS.
3. SPACE BARRIERS TO PROVIDE A GAP BETWEEN BARRIERS NO GREATER THAN 10 FEET.
4. LIGHTING MUST BE SPACED NO GREATER THAN 10' APART AND MUST BE STEADY BURNING RED.
5. CONTRACTOR MUST HAVE A PERSON ON CALL 24 HOURS A DAY FOR EMERGENCY MAINTENANCE OF THE BARRIERS. THE PERSON MUST RESPOND TO THE SITE WITHIN ONE HOUR OF BEING NOTIFIED. FILE THE NAME WITH THE CONTRACTING OFFICER AND AIROP.
6. VERIFY EXACT PLACEMENT OF BARRIERS WITH AIR OPS PRIOR TO PLACING.

C5 LOW PROFILE BARRIER (LPB) DETAIL

N.T.S.

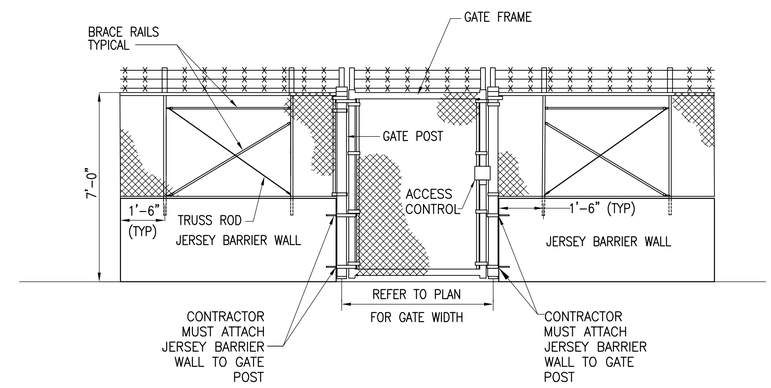

NOTE: THE CONTRACTOR MUST PROVIDE ADDITIONAL SUPPORTS AND BRACING AS NEEDED TO PROVIDE AND MAINTAIN THE GATE THROUGHOUT CONSTRUCTION. THE ADDITIONAL SUPPORTS/BRACING MUST NOT DAMAGE THE APRON PAVEMENT. ALL GATES MUST MEET THE APPROVAL OF AIR OPS AND THE CONTRACTING OFFICER.

A4 TEMPORARY SINGLE LEAF GATE

N.T.S.

SYM	DESCRIPTION	DATE	APPR
	MOD P00006 AND MOD P00007	10/2025	
	MOD P00005	05/2023	

NAVFAC

SOUTH CAROLINA REGISTERED PROFESSIONAL ENGINEER No. 23067 01/13/23 BAMFORTH

SEAL

BAMFORTH ENGINEERS + SURVEYORS

A/E INFO

APPROVED

FOR COMMANDER NAVFAC

ACTIVITY

Approved by J. Scott Roberts, Asset Management Branch Head & Supervisory Facility Planner, PWD Beaufort, SC via email.

SATISFACTORY TO DATE 12/15/2022

DES	CAB	DRW CAD	CHK ALB
PM/DM	KTB/RLH		
BRANCH MANAGER	DLB		
CHIEF ENG/ARCH	EJA		
FIRE PROTECTION	DSN		

DEPARTMENT OF THE NAVY
NAVAL FACILITIES ENGINEERING SYSTEMS COMMAND
DC CORE
MCAS BEAUFORT

NAVAL FACILITIES ENGINEERING SYSTEMS COMMAND - MID-ATLANTIC
NORFOLK, VA

BEAUFORT, SC

P-475 AIRCRAFT MAINTENANCE HANGAR - VOLUME 1 (BASE BID WITH OPTIONS)

DETAILS – TEMPORARY FENCING

SCALE: NONE

EPROJECT NO.: 1363603

CONSTR. CONTR. NO.

NAV/FAC DRAWING NO. 12859257

SHEET 85 OF 1412

CS511

DRAWFORM REVISION: 25 AUGUST 2020

FILE NAME: K:\Jobs\20021\BJWSA 10-02-25\BLDG-P475-1363603-CS511.dwg LAYOUT NAME: CS511 PLOTTED: Thursday, November 06, 2025 - 2:19pm USER: mtw

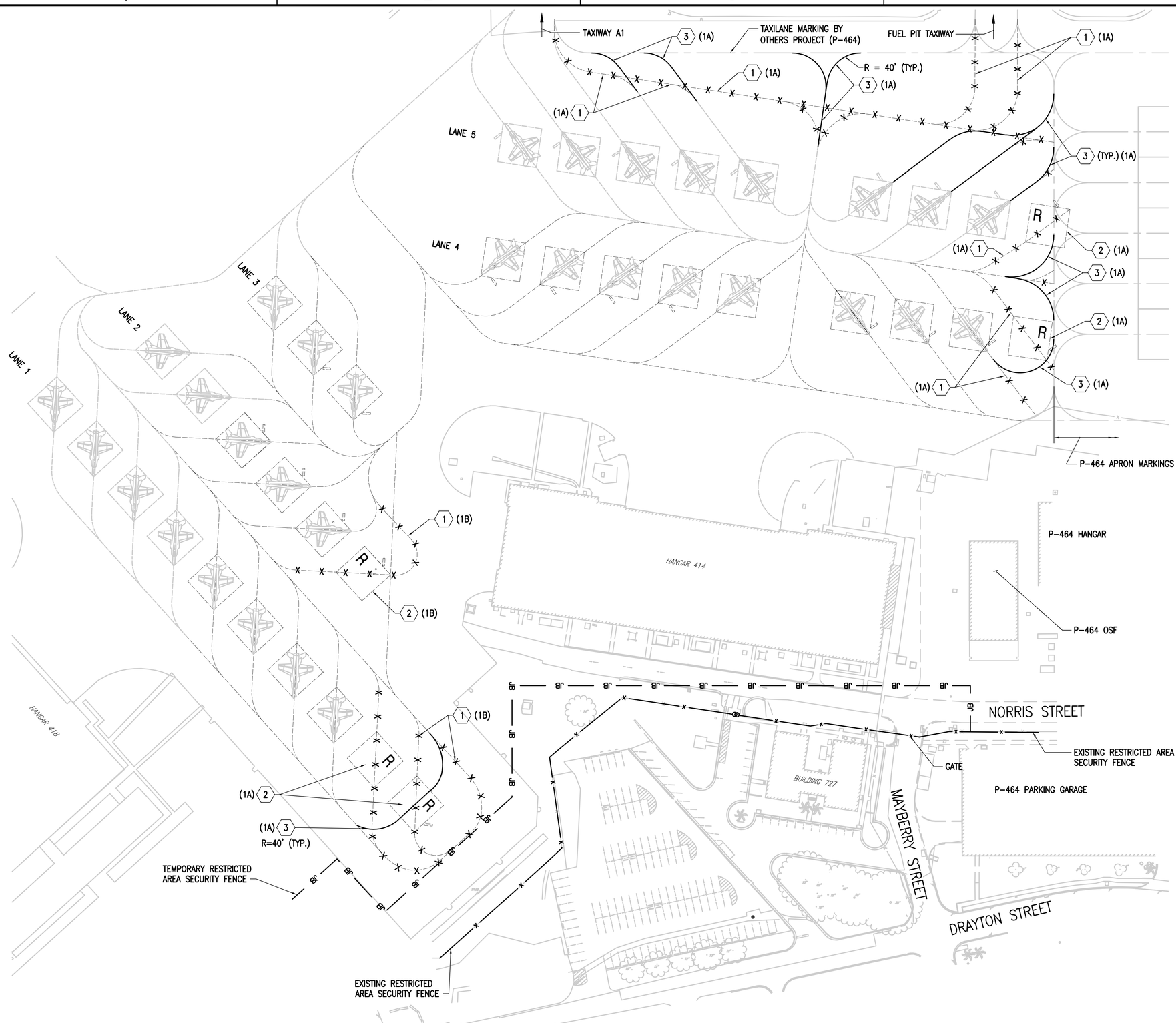

WORK KEY NOTES (THIS SHEET ONLY)

1. REMOVE CENTERLINE MARKING INDICATED BY "X".
2. REMOVE EXISTING AIRCRAFT PARKING SPOT MARKINGS (APPROX. 47' X 47' BOX WITH 12" WIDE YELLOW LINES) AND ASSOCIATED NOSE GEAR AND WHITE RECTANGULAR BOX MARKINGS INDICATED BY "R". REFER TO EXISTING AIRCRAFT PARKING SPOT MARKING DETAIL THIS SHEET.
3. PROVIDE CENTERLINE PAINT MARKING (REFER TO TO SHEET CP501/D1). TIE INTO EXISTING MARKING.

WORK GENERAL NOTES

1. PERMANENTLY REMOVE MARKINGS INDICATED BY "X" AND "R".
2. WORK INDICATED INSIDE THE RESTRICTED AREA SECURITY FENCE MUST BE PERFORMED WITH A CONTRACT EMPLOYEE WITH LEVEL II AVIOC CREDENTIAL WITHIN A 2 WEEK PERIOD. COORDINATE TIME PERIOD WITH THE CONTRACTING OFFICER AND AIR OPS.
3. ALL EXISTING STATIC GROUND MARKINGS MUST REMAIN.
4. EXISTING MARKINGS ARE 6" WIDE RETRO-REFLECTIVE PAINT, UNLESS NOTED OTHERWISE.
5. WORK IS TO COINCIDE WITH CONSTRUCTION PHASE 1A AND 1B AS INDICATED BY (1A) AND (1B) WORK KEY NOTE SUFFIX (REFER TO SHEET C-007 AND C-008). WORK MUST BE PERFORMED IMMEDIATELY PRIOR TO ESTABLISHING THE RESTRICTED AREA SECURITY FENCE AND BARRIERS INDICATED ON SHEET C-007 AND C-008.

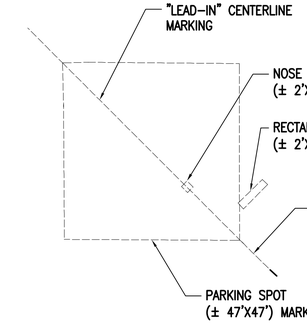

EXISTING AIRCRAFT PARKING SPOT MARKING DETAIL

N.T.S

SOUTH CAROLINA STATE PLANE

GRAPHIC SCALE

1" = 60' 0 60' 120' 180' 240'

SYM	DESCRIPTION	DATE	APPR.
	MOD P00006 AND MOD P00007	10/2025	
	MOD P00005	05/2023	

NAVFAC

SOUTH CAROLINA No. 23067 01/13/23 BAMFORTH

SEAL

BAMFORTH ENGINEERS + SURVEYORS

A/E INFO

APPROVED

FOR COMMANDER NAVFAC

ACTIVITY

Approved by J. Scott Roberts, Asset Management Branch Head & Supervisory Facility Planner, PWD Beaufort, SC via email.

SATISFACTORY TO DATE 12/15/2022

DES	CAB	DRW CAD	CHK ALB
PM/DM	KTB/RLH		
BRANCH MANAGER	DLB		
CHIEF ENG/ARCH	EJA		
FIRE PROTECTION	DSN		

DEPARTMENT OF THE NAVY
NAVAL FACILITIES ENGINEERING SYSTEMS COMMAND
NAVAL FACILITIES ENGINEERING SYSTEMS COMMAND - MID-ATLANTIC
NORFOLK, VA
DC CORE
MCAS BEAUFORT
BEAUFORT, SC
P-475 AIRCRAFT MAINTENANCE HANGAR - VOLUME 1 (BASE BID WITH OPTIONS)
APRON MARKING DEMOLITION PLAN – PHASE 1

SCALE: GRAPHIC
EPROJECT NO.: 1363603
CONSTR. CONTR. NO.
NAVFAC DRAWING NO. 12859258
SHEET 86 OF 1412

CP101

DRAWFORM REVISION: 25 AUGUST 2020

FILE NAME: K:\Jobs\20021\BMSA 10-02-25\BLDG-P475-1363603-CP101.dwg LAYOUT NAME: CP101 PLOTTED: Thursday, November 06, 2025 - 5:08pm USER: mlw

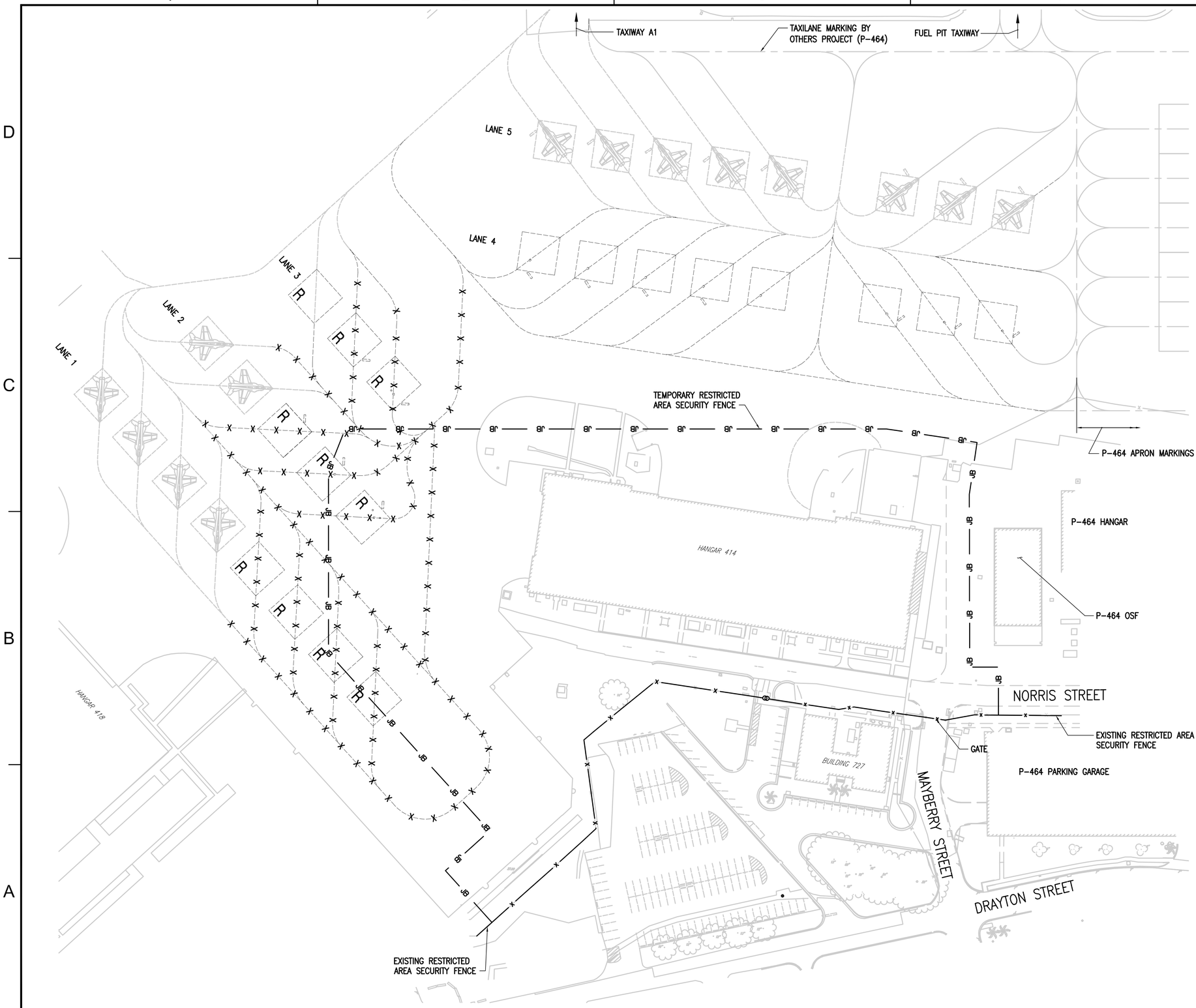

WORK KEY NOTES (THIS SHEET ONLY)

1. REMOVE CENTERLINE MARKING INDICATED BY "X".
2. REMOVE EXISTING AIRCRAFT PARKING SPOT MARKINGS (APPROX. 47' X 47' BOX WITH 12" WIDE YELLOW LINES) AND ASSOCIATED NOSE GEAR AND WHITE RECTANGULAR BOX MARKINGS INDICATED BY "R" (10 TOTAL). REFER TO EXISTING AIRCRAFT PARKING SPOT MARKING DETAIL THIS SHEET.

WORK GENERAL NOTES

1. PERMANENTLY REMOVE MARKINGS INDICATED BY "X" AND "R".
2. WORK INDICATED INSIDE THE RESTRICTED AREA SECURITY FENCE MUST BE PERFORMED WITH A GOVERNMENT ESCORT WITHIN A 2 WEEK PERIOD. COORDINATE TIME PERIOD WITH THE CONTRACTING OFFICER AND AIR OPS.
3. ALL EXISTING STATIC GROUND MARKINGS MUST REMAIN.
4. EXISTING MARKINGS ARE 6" WIDE RETRO-REFLECTIVE PAINT, UNLESS NOTED OTHERWISE.
5. PROVIDE PAVEMENT MARKINGS INDICATED IN MARKING IMPROVEMENT PLAN – PHASE 2 (SHEET CP103) AT THE SAME TIME AS WORK SHOWN ON THIS SHEET.
6. WORK IS TO COINCIDE WITH CONSTRUCTION PHASE 1B (REFER TO SHEET C-008) AND MUST BE PERFORMED IMMEDIATELY PRIOR TO ESTABLISHING THE RESTRICTED AREA SECURITY FENCE AND BARRIERS INDICATED ON SHEET C-009 (CONSTRUCTION PHASE 2).

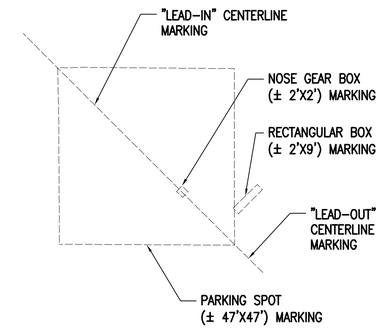

EXISTING AIRCRAFT PARKING SPOT MARKING DETAIL

N.T.S

SOUTH CAROLINA STATE PLANE

N

GRAPHIC SCALE

1" = 60' 0 60' 120' 180' 240'

SYM	DESCRIPTION	DATE	APPR.
	MOD P00006 AND MOD P00007	10/2025	
	MOD P00005	05/2023	

NAVFAC

SOUTH CAROLINA PROFESSIONAL ENGINEER No. 23067 01/13/23 BAMFORTH

SEAL

BAMFORTH ENGINEERS + SURVEYORS

A/E INFO:

APPROVED

FOR COMMANDER NAVFAC

ACTIVITY

Approved by J. Scott Roberts, Asset Management Branch Head & Supervisory Facility Planner, PWD Beaufort, SC via email.

SATISFACTORY TO DATE 12/15/2022

DES	CAB	DRW CAD	CHK ALB
PM/DM	KTB/RLH		
BRANCH MANAGER	DLB		
CHIEF ENG/ARCH	EJA		
FIRE PROTECTION	DSN		

DEPARTMENT OF THE NAVY
NAVAL FACILITIES ENGINEERING SYSTEMS COMMAND
DC:CORE
NAVAL FACILITIES ENGINEERING SYSTEMS COMMAND - MID-ATLANTIC
NORFOLK, VA
MCAS BEAUFORT
BEAUFORT, SC

P-475 AIRCRAFT MAINTENANCE HANGAR - VOLUME 1 (BASE BID WITH OPTIONS)

APRON MARKING DEMOLITION PLAN – PHASE 2

SCALE: GRAPHIC

EPROJECT NO.: 1363603

CONSTR. CONTR. NO.

NAVFAC DRAWING NO. 12859259

SHEET 87 OF 1412

CP102

DRAWFORM REVISION: 25 AUGUST 2020

FILE NAME: K:\Jobs\20021\BUMSA 10-02-25\BLDG-P475-1363603-CP102.dwg LAYOUT NAME: CP102 PLOTTED: Thursday, November 06, 2025 - 5:07pm USER: mtw

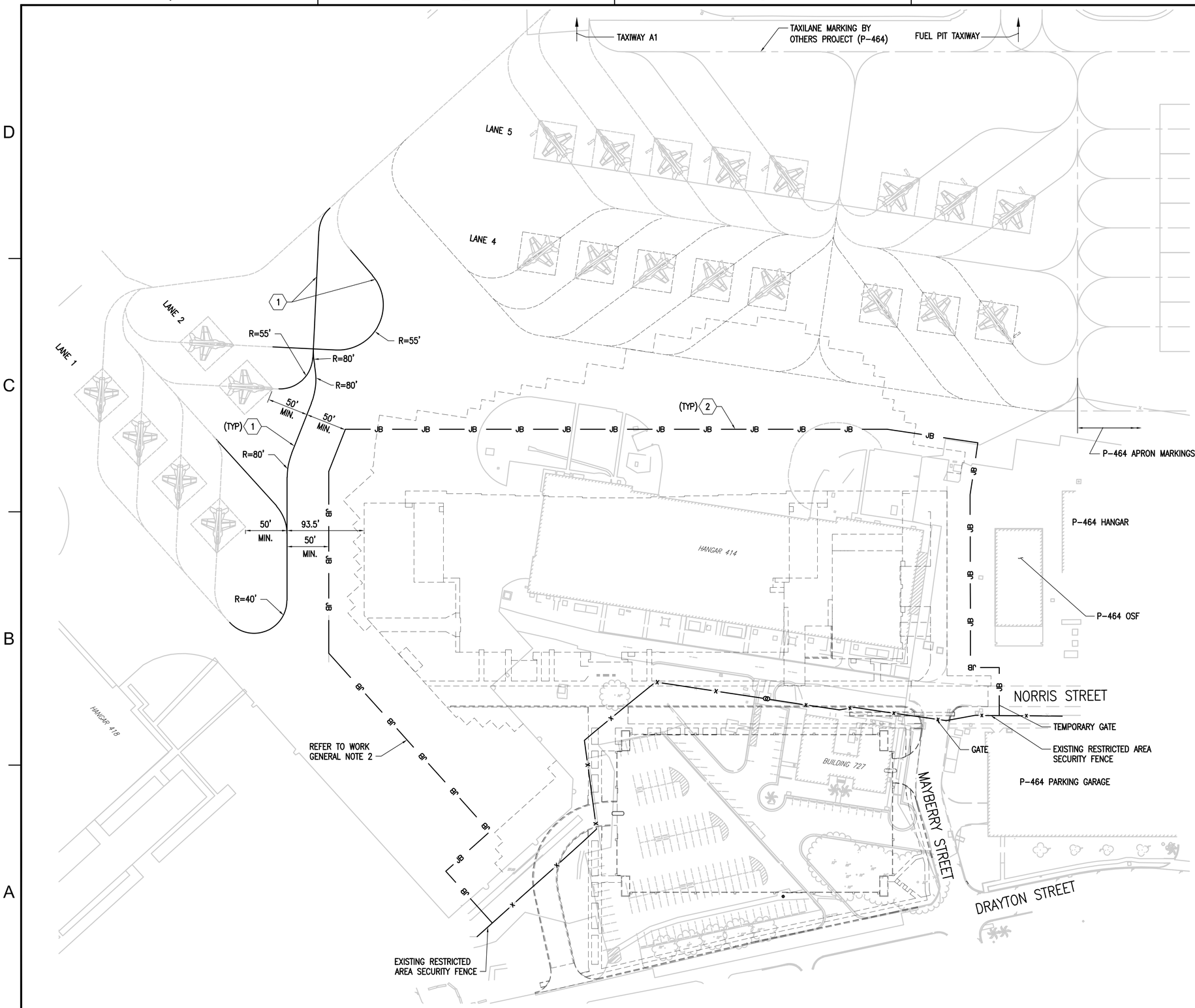

WORK KEY NOTES (THIS SHEET ONLY)

1. PROVIDE CENTERLINE PAINT MARKING. (REFER TO SHEET CP501/D1). TIE INTO EXISTING MARKING.
2. TEMPORARY RESTRICTED AREA SECURITY FENCE

WORK GENERAL NOTES

1. PHASE 2 MARKINGS MUST BE PROVIDED AT THE SAME TIME AS WORK INDICATED ON SHEET CP102.
2. THE JERSEY BARRIER FENCE DEPICTED IS THE SAME AS SHOWN ON SHEET C-009 AND IS SHOWN TO INDICATE MINIMUM STAND-OFF DIMENSIONS FOR THE TAXILANE CENTERLINE MARKINGS.

GRAPHIC SCALE

1" = 60' 0 60' 120' 180' 240'

SYM	DESCRIPTION	DATE	APPR
	MOD P00006 AND MOD P00007	10/2025	
	MOD P00005	05/2023	

NAVFAC

SOUTH CAROLINA No. 23067 01/13/23 ANTHONY L. BAMFORTH REGISTERED PROFESSIONAL ENGINEER

SEAL

BAMFORTH ENGINEERS + SURVEYORS

A/E INFO

APPROVED

FOR COMMANDER NAVFAC

ACTIVITY

Approved by J. Scott Roberts, Asset Management Branch Head & Superintory Facility Planner, PWD Beaufort, SC via email.

SATISFACTORY TO DATE 12/15/2022

DES	CAB	DRW	CAD	CHK	ALB

PM/DM KTB/RLH

BRANCH MANAGER DLB

CHIEF ENGIARCH EJA

FIRE PROTECTION DSN

DEPARTMENT OF THE NAVY
NAVAL FACILITIES ENGINEERING SYSTEMS COMMAND
NAVAL FACILITIES ENGINEERING SYSTEMS COMMAND - MID-ATLANTIC
NORFOLK, VA

DC CODE
MCAS BEAUFORT
BEAUFORT, SC

P-475 AIRCRAFT MAINTENANCE HANGAR - VOLUME 1 (BASE BID WITH OPTIONS)

APRON MARKING IMPROVEMENT PLAN – PHASE 2

SCALE: GRAPHIC

EPROJECT NO.: 1363603

CONSTR. CONTR. NO.

NAVFAC DRAWING NO.
12859260

SHEET 88 OF 1412

CP103

DRAWFORM REVISION: 25 AUGUST 2020

FILE NAME: K:\jobs\20021\BJWSA 10-02-25\BLDG-P475-1363603-CP103.dwg LAYOUT NAME: CP103 PLOTTED: Thursday, November 06, 2025 - 5:08pm USER: mtw

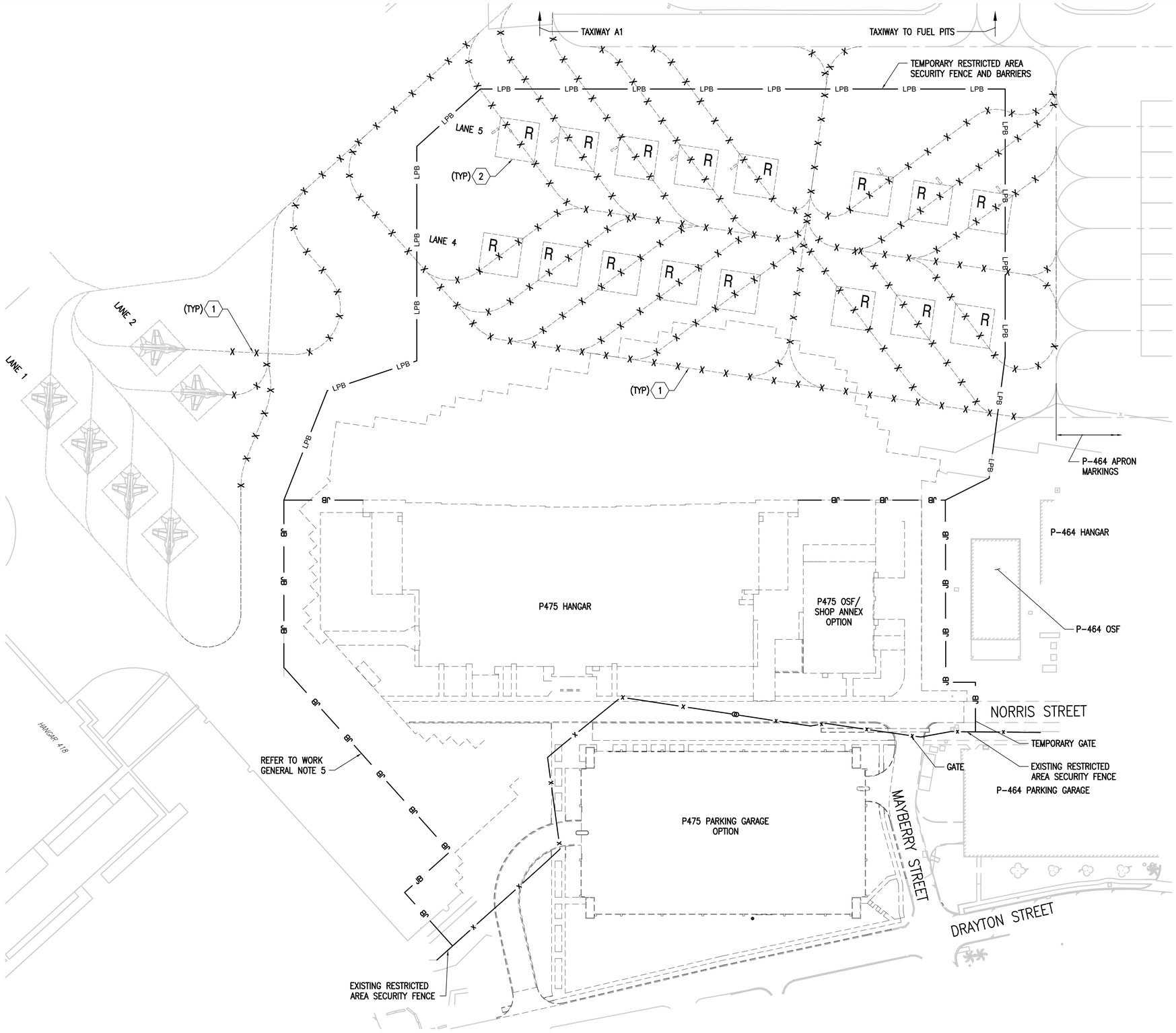

WORK KEY NOTES (THIS SHEET ONLY)

1. REMOVE TAXILANE CENTERLINE MARKING INDICATED BY "X".
2. REMOVE EXISTING AIRCRAFT PARKING SPOT MARKINGS (APPROX. 47' X 47' BOX WITH 12" WIDE YELLOW LINES) AND ASSOCIATED NOSE GEAR AND WHITE RECTANGULAR BOX MARKINGS INDICATED BY "R" (16 TOTAL). (REFER TO EXISTING AIRCRAFT PARKING SPOT MARKING DETAIL SHEET CP101).

WORK GENERAL NOTES

1. PERMANENTLY REMOVE MARKINGS INDICATED BY "X" AND "R".
2. EXISTING MARKINGS ARE 6" WIDE RETRO-REFLECTIVE PAINT, UNLESS NOTED OTHERWISE.
3. ALL EXISTING STATIC GROUND MARKINGS MUST REMAIN.
4. MARKING DEMOLITION AND IMPROVEMENT WORK PHASE D WORK MUST COINCIDE WITH CONSTRUCTION PHASE 3 (REFER TO SHEET C-010).
5. THE JERSEY BARRIER FENCE DEPICTED IS THE SAME AS SHOWN ON SHEET C-010 AND IS SHOWN TO INDICATE MINIMUM STAND-OFF DIMENSIONS FOR THE TAXILANE CENTERLINE MARKINGS.

GRAPHIC SCALE

1" = 60' 0 60' 120' 180' 240'

SYM	DESCRIPTION	DATE	APPR.
	MOD P00006 AND MOD P00007	10/2025	
	MOD P00005	05/2023	

NAVFAC

SOUTH CAROLINA No. 23067 01/13/23 PROFESSIONAL ENGINEER

SEAL

BAMFORTH ENGINEERS + SURVEYORS

A/E INFO

APPROVED:

FOR COMMANDER NAVFAC

ACTIVITY

Approved by J. Scott Roberts, Asset Management Branch Head & Supervisory Facility Planner, PWD Beaufort, SC via email.

SATISFACTORY TO DATE 12/15/2022

DES CAB DRW CAD CHK ALB

PM/DM KTB/RLH

BRANCH MANAGER DLB

CHIEF ENG/ARCH EJA

FIRE PROTECTION DSN

DEPARTMENT OF THE NAVY
NAVAL FACILITIES ENGINEERING SYSTEMS COMMAND
NAVAL FACILITIES ENGINEERING SYSTEMS COMMAND - MID-ATLANTIC
NORFOLK, VA
DC-CORE
MCAS BEAUFORT
BEAUFORT, SC

P-475 AIRCRAFT MAINTENANCE HANGAR - VOLUME 1 (BASE BID WITH OPTIONS)

APRON MARKING DEMOLITION PLAN – PHASE 3

SCALE: GRAPHIC

EPROJECT NO.: 1363603

CONSTR. CONTR. NO.

NAVFAC DRAWING NO. 12859261

SHEET 89 OF 1412

CP104

DRAWFORM REVISION: 25 AUGUST 2020

FILE NAME: K:\jobs\20021\BUMSA 10-02-25\BLDG-P475-1363603-CP104.dwg LAYOUT NAME: CP104 PLOTTED: Thursday, November 06, 2025 - 2:20pm USER: mlw

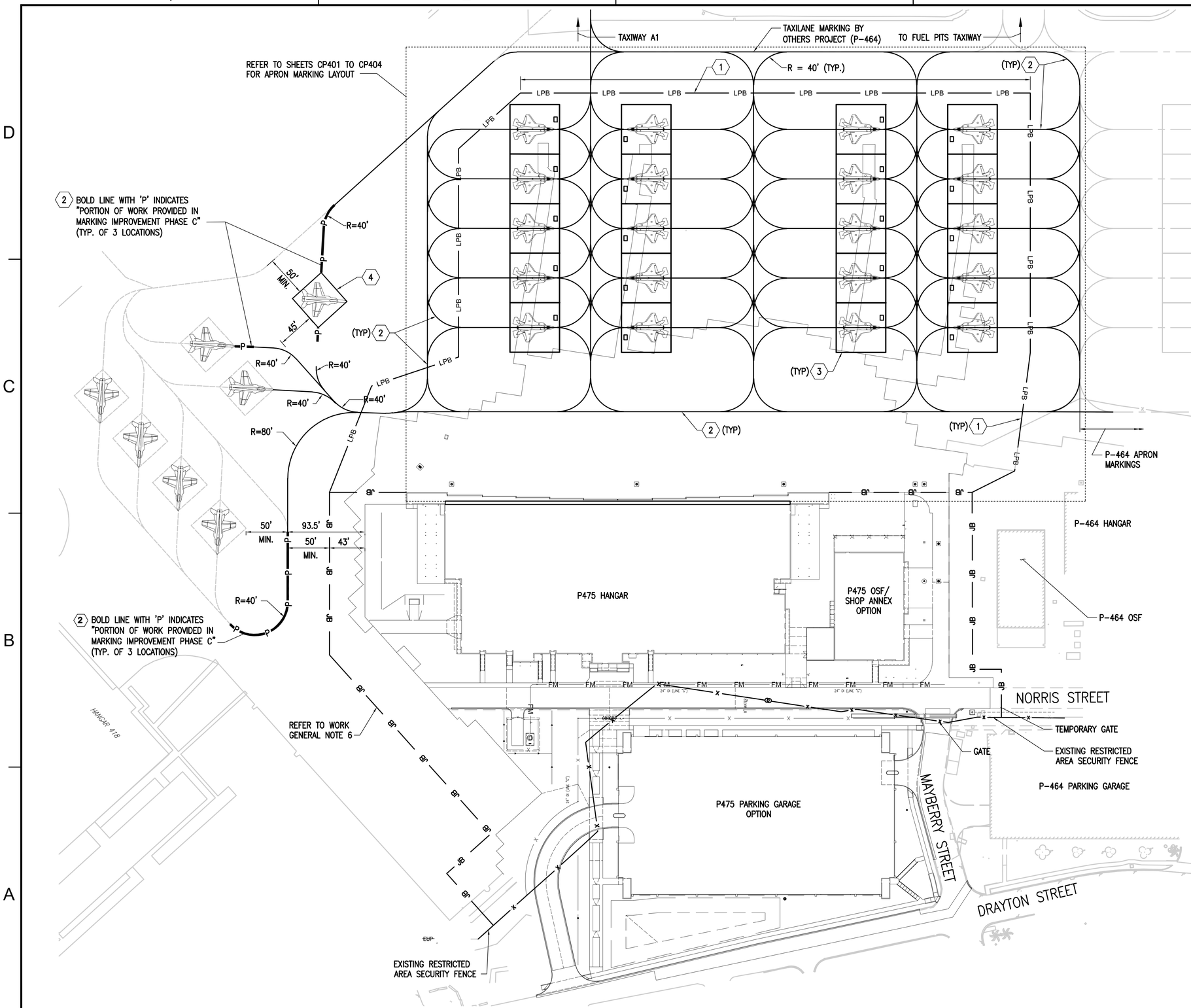

WORK KEY NOTES (THIS SHEET ONLY)

1. PROVIDE TEMPORARY RESTRICTED AREA SECURITY FENCE AND LOW PROFILE BARRIERS (LPB).
2. PROVIDE CENTERLINE PAINT MARKING. (REFER TO DETAIL CP501/D1). TIE INTO EXISTING MARKING.
3. PROVIDE SUNSHADE MARKINGS (20 TOTAL). REFER TO DETAIL CP501/A1.
4. RE-ESTABLISH AIRCRAFT PARKING SPOT MARKINGS. INCLUDING NOSE GEAR AND RECTANGULAR BOX FOR LATITUDE/ LONGITUDE/ ELEVATION. REFER TO EXISTING AIRCRAFT PARKING SPOT MARKING DETAIL SHEET CP101. NOSE GEAR AND LATITUDE/ LONGITUDE/ ELEVATION MARKINGS TO BE SIMILAR TO THOSE INDICATED IN DETAIL CP501/A1.

WORK GENERAL NOTES (THIS SHEET ONLY)

1. PERMANENTLY REMOVE MARKINGS INDICATED BY "X" AND "R".
2. WORK INDICATED BEYOND THE RESTRICTED AREA SECURITY FENCE MUST BE PERFORMED WITH A GOVERNMENT ESCORT WITHIN A 2 WEEK PERIOD. COORDINATE TIME PERIOD WITH THE CONTRACTING OFFICER AND AIR OPS.
3. ALL EXISTING STATIC GROUND MARKINGS MUST REMAIN.
4. EXISTING MARKINGS ARE 6" WIDE RETRO-REFLECTIVE PAAIT, UNLESS NOTED OTHERWISE.
5. THE MARKING IMPROVEMENT PHASE 3 WORK MUST BE PROVIDED DURING CONSTRUCTION PHASE 3 (REFER TO SHEET C-010). ALL LINE REMOVAL AND NEW WORK WEST OF THE NEW AIRCRAFT SHELTERS AND BEYOND THE SECURED AREA MUST BE PERFORMED AT THE BEGINNING OF THE CONSTRUCTION PHASE,
6. THE JERSEY BARRIER FENCE DEPICTED IS THE SAME AS SHOWN ON SHEET C-010 AND IS SHOWN TO INDICATE MINIMUM STAND-OFF DIMENSIONS FOR THE TAXILANE CENTERLINE MARKINGS.

GRAPHIC SCALE

1" = 60' 0 60' 120' 180' 240'

SYM	DESCRIPTION	DATE	APPR.
	MOD P00006 AND MOD P00007	10/2025	
	MOD P00005	05/2023	

NAVFAC

SOUTH CAROLINA REGISTERED PROFESSIONAL ENGINEER No. 23067 01/13/23 ANTHONY T. BAMFORTH

SEAL

BAMFORTH ENGINEERS + SURVEYORS

A/E INFO

APPROVED

FOR COMMANDER NAVFAC

ACTIVITY

Approved by J. Scott Roberts, Asset Management Branch Head & Supervisory Facility Planner, PWD Beaufort, SC via email.

SATISFACTORY TO DATE 12/15/2022

DES	CAB	DRW	CAD	CHK	ALB
PM/DM	KTB/RLH				
BRANCH MANAGER	DLB				
CHIEF ENG/ARCH	EJA				
FIRE PROTECTION	DSN				

DEPARTMENT OF THE NAVY
NAVAL FACILITIES ENGINEERING SYSTEMS COMMAND
DC CORE
NAVAL FACILITIES ENGINEERING SYSTEMS COMMAND - MID-ATLANTIC
NORFOLK, VA
MCAS BEAUFORT
BEAUFORT, SC

P-475 AIRCRAFT MAINTENANCE HANGAR - VOLUME 1 (BASE BID WITH OPTIONS)

APRON MARKING IMPROVEMENT PLAN – PHASE 3

SCALE: GRAPHIC
EPROJECT NO.: 1363603
CONSTR. CONTR. NO.
NAVFAC DRAWING NO. 12859262
SHEET 90 OF 1412

CP105

DRAWFORM REVISION: 25 AUGUST 2020

FILE NAME: K:\jobs\20021\BURSA 10-02-25\BLDG-P475-1363603-CP105.dwg LAYOUT NAME: CP105 PLOTTED: Thursday, November 06, 2025 - 2:20pm USER: mlw

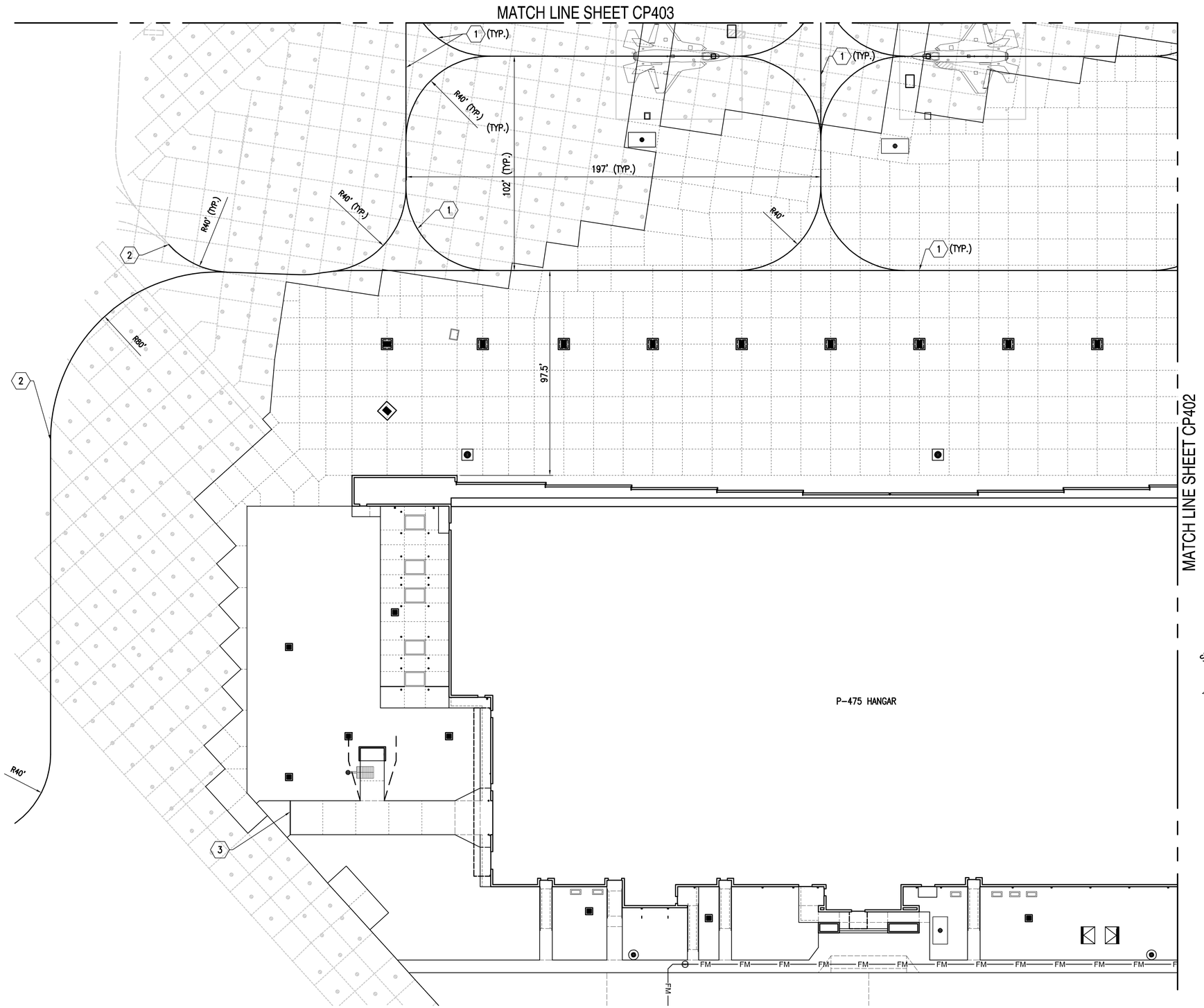

SITE IMPROVEMENT KEY NOTES (THIS SHEET ONLY)

1. TAXIWAY CENTERLINE MARKING (REFER TO SHEET CP501/D1)
2. TIE TO EXISTING MARKING.

SITE IMPROVEMENT GENERAL NOTES

1. PROVIDE MARKINGS INDICATED.
2. DIMENSIONS INDICATED ARE FROM CENTERLINE OF MARKING.

SHEET NOTES

1. REFER TO C-005 FOR OVERALL SITE PLAN

SOUTH CAROLINA STATE PLANE

N

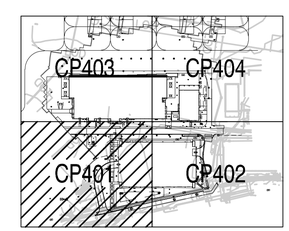

KEY PLAN

GRAPHIC SCALE

1" = 25' 0 25' 50' 75' 100'

SYM	DESCRIPTION	DATE	APPR
	MOD P00006 AND MOD P00007	10/2025	
	MOD P00005	05/2023	

NAVFAC

SOUTH CAROLINA No. 23067 01/13/23 BAMFORTH

SEAL

BAMFORTH ENGINEERS + SURVEYORS

A/E INFO

APPROVED

FOR COMMANDER NAVFAC

ACTIVITY

Approved by J. Scott Roberts, Asset Management Branch Head & Supervisory Facility Planner, PWD Beaufort, SC via email.

SATISFACTORY TO DATE 12/15/2022

DES	CAB	DRW CAD	CHK ALB
PM/DM	KTB/RLH		
BRANCH MANAGER	DLB		
CHIEF ENG/ARCH	EJA		
FIRE PROTECTION	DSN		

DEPARTMENT OF THE NAVY
NAVAL FACILITIES ENGINEERING SYSTEMS COMMAND
NAVAL FACILITIES ENGINEERING SYSTEMS COMMAND - MID-ATLANTIC
NORFOLK, VA
DC CORE
MCAS BEAUFORT
BEAUFORT, SC

P-475 AIRCRAFT MAINTENANCE HANGAR - VOLUME 1 (BASE BID WITH OPTIONS)

ENLARGED APRON MARKING PLAN

SCALE: GRAPHIC
EPROJECT NO.: 1363603
CONSTR. CONTR. NO.
NAVFAC DRAWING NO. 12859263
SHEET 91 OF 1412

CP401

DRAWFORM REVISION: 25 AUGUST 2020

FILE NAME: K:\Jobs\2022\BJWSA 10-02-25\BLDG-P475-1363603-CP401.dwg LAYOUT NAME: CP401 PLOTTED: Thursday, November 06, 2025 - 2:20pm USER: mtw

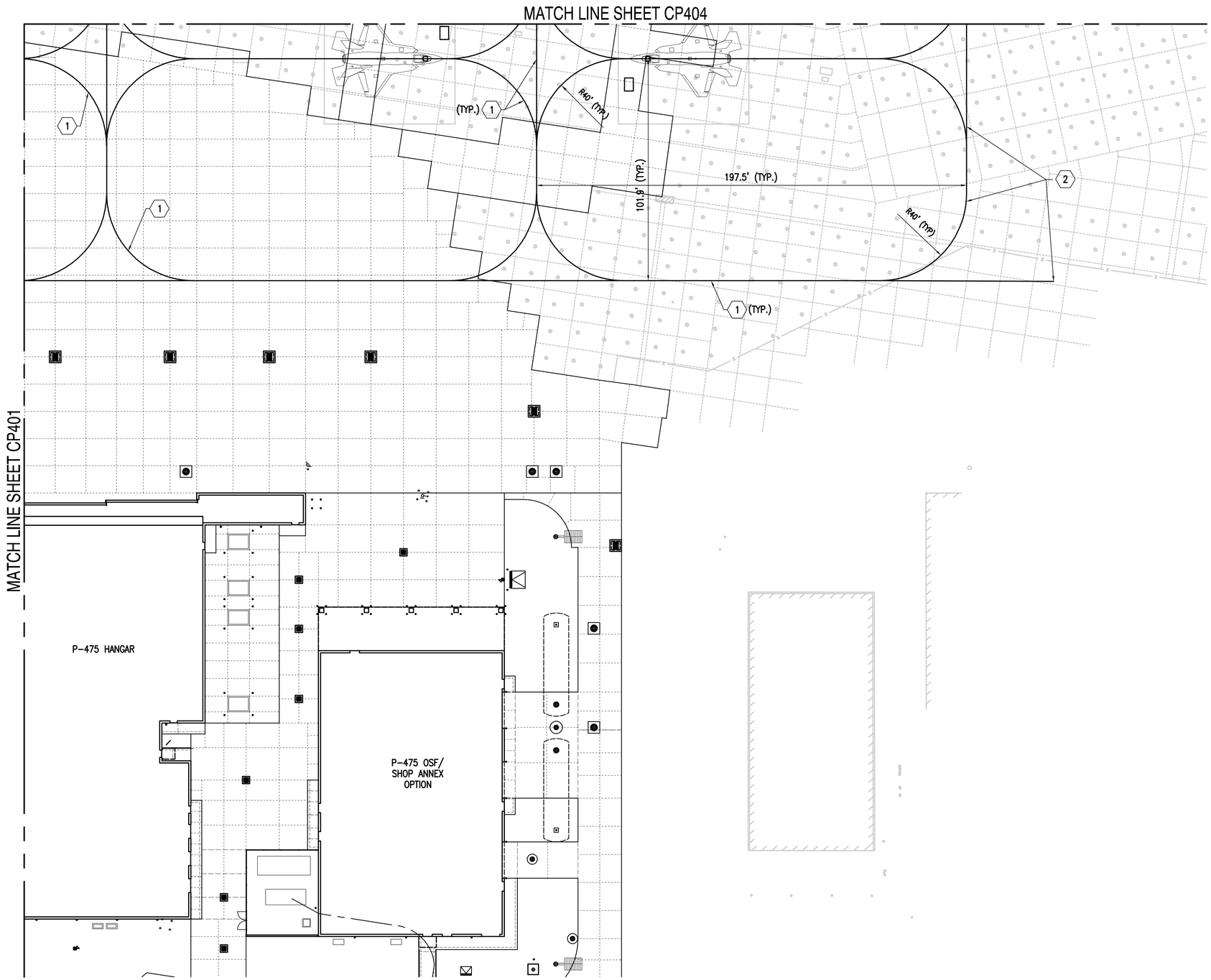

SITE IMPROVEMENT KEY NOTES (THIS SHEET ONLY)

1. TAXIWAY CENTERLINE MARKING – REFER TO SHEET CP501/D1
2. TIE TO EXISTING MARKING.

SITE IMPROVEMENT GENERAL NOTES

1. PROVIDE MARKINGS INDICATED.
2. DIMENSIONS INDICATED ARE FROM CENTERLINE OF MARKING.

SHEET NOTES

1. REFER TO C-005 FOR OVERALL SITE PLAN

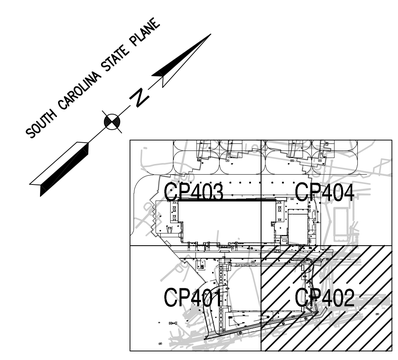

KEY PLAN

GRAPHIC SCALE

1" = 25' 0 25' 50' 75' 100'

SYM	DESCRIPTION	DATE	APPR
	MOD P00006 AND MOD P00007	10/2025	
	MOD P00005	05/2023	

NAVFAC

SOUTH CAROLINA No. 23067 01/13/23 ANTHONY L. BAMFORTH

SEAL

BAMFORTH ENGINEERS + SURVEYORS

A/E INFO:

APPROVED

FOR COMMANDER NAVFAC

ACTIVITY

Approved by J. Scott Roberts, Asset Management Branch Head & Supervisory Facility Planner, PWD Beaufort, SC via email.

SATISFACTORY TO DATE 12/15/2022

DES	CAB	DRW	CAD	CHK	ALB

PM/DM	KTB/RLH
BRANCH MANAGER	DLB
CHIEF ENG/ARCH	EJA
FIRE PROTECTION	DSN

DEPARTMENT OF THE NAVY
NAVAL FACILITIES ENGINEERING SYSTEMS COMMAND
DC CORE
NAVAL FACILITIES ENGINEERING SYSTEMS COMMAND - MID-ATLANTIC
NORFOLK, VA
MCAS BEAUFORT
BEAUFORT, SC

P-475 AIRCRAFT MAINTENANCE HANGAR - VOLUME 1 (BASE BID WITH OPTIONS)

ENLARGED APRON MARKING PLAN

SCALE: GRAPHIC
EPROJECT NO.: 1363603
CONSTR. CONTR. NO.
NAVFAC DRAWING NO. 12859264
SHEET 92 OF 1412

CP402

DRAWFORM REVISION: 25 AUGUST 2020

FILE NAME: K:\Jobs\2022\BJMSA 10-02-25\BLDG-P475-1363603-CP402.dwg LAYOUT NAME: CP402 PLOTTED: Thursday, November 06, 2025 - 2:20pm USER: mlw

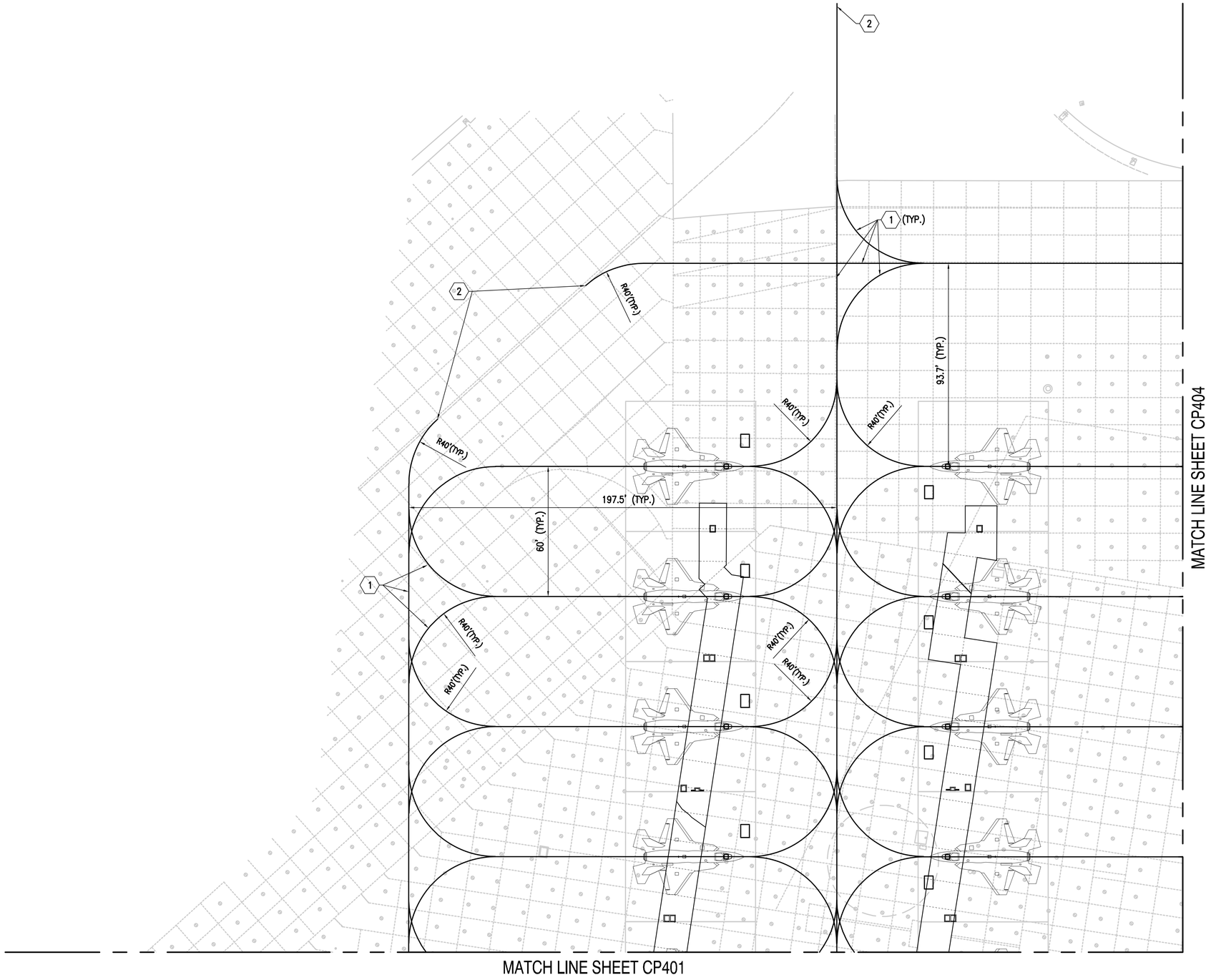

SITE IMPROVEMENT KEY NOTES (THIS SHEET ONLY)

1. TAXIWAY CENTERLINE MARKING – REFER TO SHEET CP501/D1
2. TIE TO EXISTING MARKING.

SITE IMPROVEMENT GENERAL NOTES

1. PROVIDE MARKINGS INDICATED.
2. DIMENSIONS INDICATED ARE FROM CENTERLINE OF MARKING.

SHEET NOTES

1. REFER TO C-005 FOR OVERALL SITE PLAN

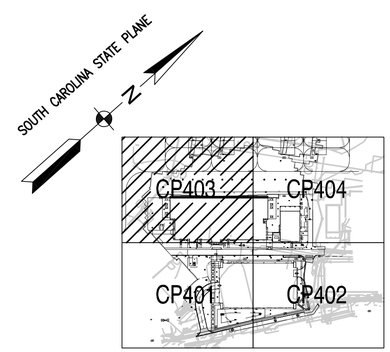

KEY PLAN

GRAPHIC SCALE

1" = 25' 0 25' 50' 75' 100'

SYM	DESCRIPTION	DATE	APPR
	MOD P00006 AND MOD P00007	10/2025	
	MOD P00005	05/2023	

NAVFAC

SOUTH CAROLINA No. 23067 01/13/23 LANDON T. BAMFORTH

SEAL

BAMFORTH ENGINEERS + SURVEYORS

A/E INFO

APPROVED

FOR COMMANDER NAVFAC

ACTIVITY

Approved by J. Scott Roberts, Asset Management Branch Head & Supervisory Facility Planner, PWD Beaufort, SC via email.

SATISFACTORY TO DATE 12/15/2022

DES	CAB	DRW	CAD	CHK	ALB

PM/DM KTB/RLH

BRANCH MANAGER DLB

CHIEF ENGIARCH EJA

FIRE PROTECTION DSN

DEPARTMENT OF THE NAVY
NAVAL FACILITIES ENGINEERING SYSTEMS COMMAND
NAVAL FACILITIES ENGINEERING SYSTEMS COMMAND - MID-ATLANTIC
NORFOLK, VA

DC CODE

MCAS BEAUFORT
BEAUFORT, SC

P-475 AIRCRAFT MAINTENANCE HANGAR - VOLUME 1 (BASE BID WITH OPTIONS)

ENLARGED APRON MARKING PLAN

SCALE: GRAPHIC

EPROJECT NO.: 1363603

CONSTR. CONTR. NO.

NAVFAC DRAWING NO. 12859265

SHEET 93 OF 1412

CP403

DRAWFORM REVISION: 25 AUGUST 2020

FILE NAME: K:\jobs\20021\BMSA 10-02-25\BLDG-P475-1363603-CP403.dwg LAYOUT NAME: CP403 PLOTTED: Thursday, November 06, 2025 - 2:20pm USER: mtw

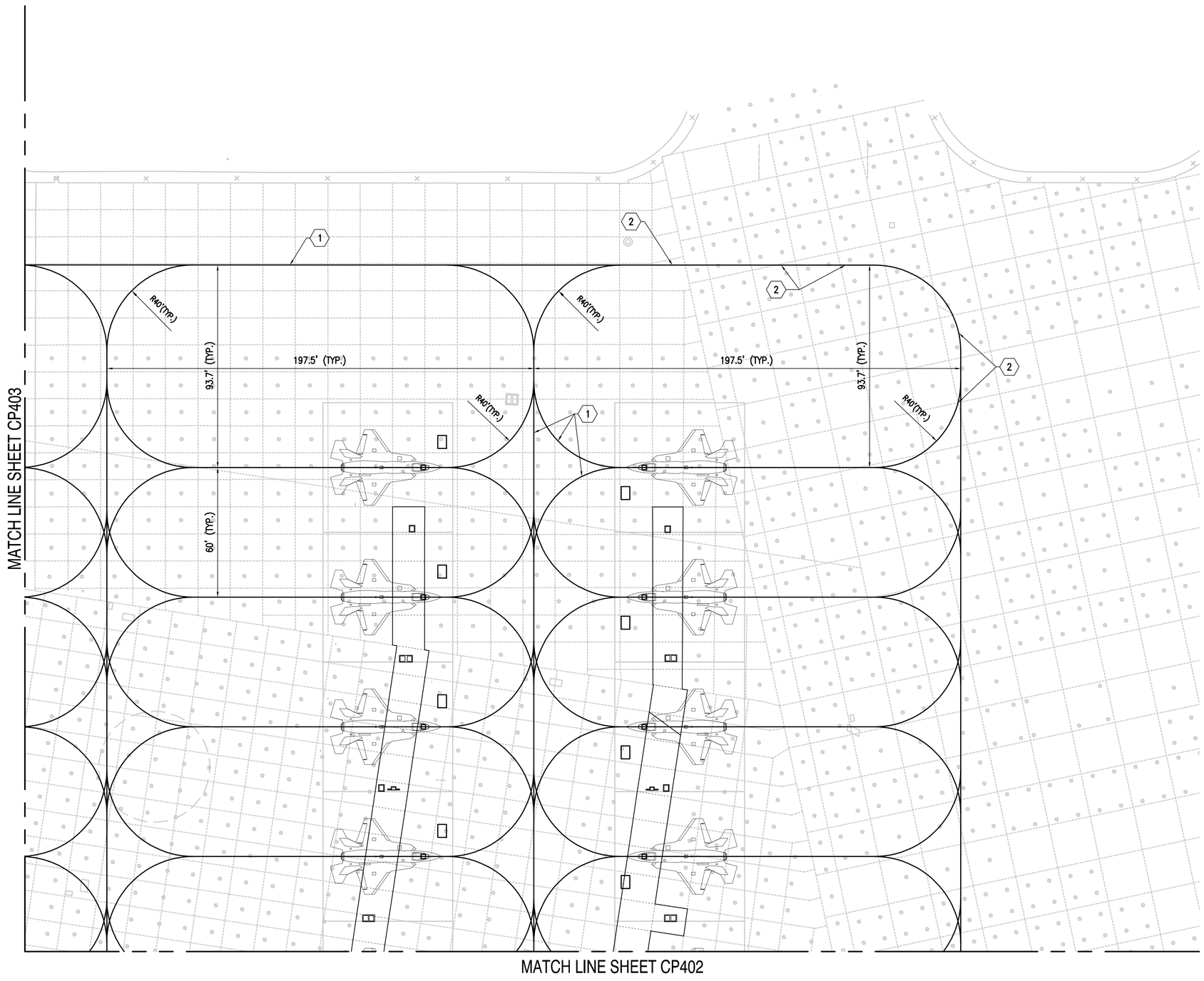

SITE IMPROVEMENT KEY NOTES (THIS SHEET ONLY)

1. TAXIWAY CENTERLINE MARKING – REFER TO SHEET CP501/D1
2. TIE TO EXISTING MARKING.

SITE IMPROVEMENT GENERAL NOTES

1. PROVIDE MARKINGS INDICATED.
2. DIMENSIONS INDICATED ARE FROM CENTERLINE OF MARKING.

SHEET NOTES

1. REFER TO C-005 FOR OVERALL SITE PLAN

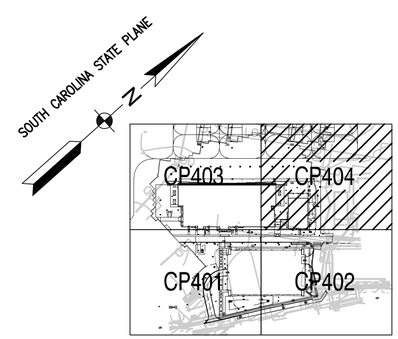

KEY PLAN

GRAPHIC SCALE

1" = 25' 0 25' 50' 75' 100'

STM	DESCRIPTION	DATE	APPR.
	MOD P00006 AND MOD P00007	10/2025	
	MOD P00005	05/2023	

NAVFAC

SOUTH CAROLINA No. 23067 01/13/23 BAMFORTH

SEAL

BAMFORTH ENGINEERS + SURVEYORS

A/E INFO

APPROVED

FOR COMMANDER NAVFAC

ACTIVITY

Approved by J. Scott Roberts, Asset Management Branch Head & Supervisory Facility Planner, PWD Beaufort, SC via email.

SATISFACTORY TO DATE 12/15/2022

DES CAB | DRW CAD | CHK ALB

PM/DM KTB/RLH

BRANCH MANAGER DLB

CHIEF ENG/ARCH EJA

FIRE PROTECTION DSN

DEPARTMENT OF THE NAVY
NAVAL FACILITIES ENGINEERING SYSTEMS COMMAND
DC CODE
NAVAL FACILITIES ENGINEERING SYSTEMS COMMAND - MID-ATLANTIC
NORFOLK, VA
MCAS BEAUFORT
BEAUFORT, SC

P-475 AIRCRAFT MAINTENANCE HANGAR - VOLUME 1 (BASE BID WITH OPTIONS)

ENLARGED APRON MARKING PLAN

SCALE: GRAPHIC

EPROJECT NO.: 1363603

CONSTR. CONTR. NO.

NAVFAC DRAWING NO. 12859266

SHEET 94 OF 1412

CP404

DRAWFORM REVISION: 25 AUGUST 2020

FILE NAME: K:\Jobs\20021\BJMSA 10-02-25\BLDG-P475-1363603-CP404.dwg LAYOUT NAME: CP404 PLOTTED: Thursday, November 06, 2025 - 2:21pm USER: mtw

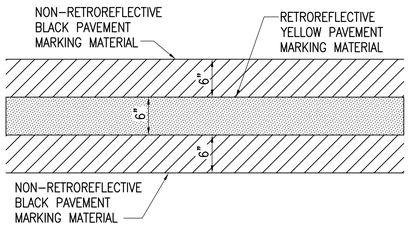

D1 TAXILANE CENTERLINE MARKING

N.T.S.

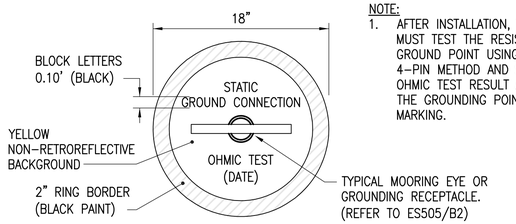

NOTE:
1. AFTER INSTALLATION, THE CONTRACTOR MUST TEST THE RESISTANCE OF THE GROUND POINT USING THE WENNER 4-PIN METHOD AND STENCIL THE OHMIC TEST RESULT AND DATE ONTO THE GROUNDING POINT PAVEMENT MARKING.

C1 GROUNDING POINT MARKING DETAIL

NOT TO SCALE

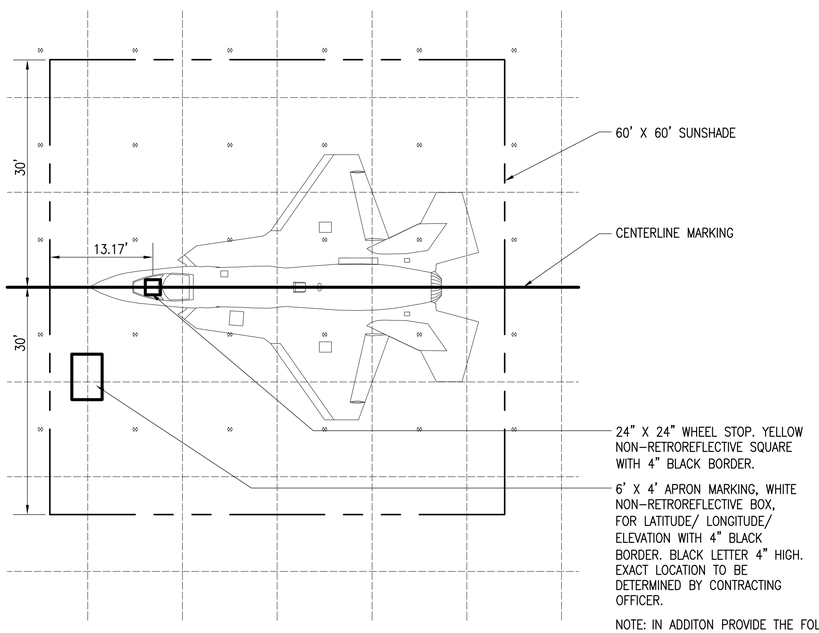

A1 SUNSHADE PAVEMENT MARKING DETAIL

SCALE: 1" = 60'

NOTE: IN ADDITON PROVIDE THE FOLLOWING FOR EACH SUNSHADE:
1. 4 GROUNDING POINTS (COORDINATE LOCATION WITH CONTRACTING OFFICER)
2. 4 MOORING POINTS (COORDINATE LOCATION WITH CONTRACTING OFFICER)
3. COMMUNICATIONS/DATA PORT
4. 110V SHORE POWER
5. STAINLESS STEEL KIOSK
6. LED LIGHTING WITH SWITCH AND TIMER
7. LATITUDE AND LONGITUDE LOCATION PRINTED ON SUNSHADE FABRIC
8. 270V AIRCRAFT POWER (ONE UNIT PER TWO SUNSHADES)

REFER TO ARCHITECTURAL, ELECTRICAL AND TELECOMMUNICATION PLANS.

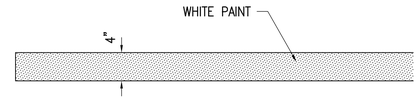

D3 4" WHITE PAINT LINE

N.T.S.

APRON PAVEMENT MARKING GENERAL NOTES

1. THE CONTRACTOR MUST AT ALL TIMES DURING CONSTRUCTION ON AIRFIELD PAVEMENT, MAINTAIN RADIO COMMUNICATION WITH THE AIRFIELD CONTROL TOWER AND HAVE A MOBILE TELEPHONE AVAILABLE AT THE WORK SITE. ALL VEHICLES AND EQUIPMENT ENTERING AND EXITING THE AIRFIELD OPERATIONS AREA (AOA) MUST HAVE A VISIBLE CONTRACTOR REPRESENTATIVE.
2. SCHEDULING OF APRON MARKING WORK MUST BE SUCH THAT THE EXISTING AIRCRAFT PARKING SPOTS MAY BE USED BY AIRCRAFT AS LONG AS POSSIBLE. WORK MUST BE SCHEDULED AND COORDINATED WITH AIR OPERATIONS VIA THE CONTRACTING OFFICER.
3. COORDINATE THE REMOVAL OR MOVEMENT OF AIRCRAFT TO A TEMPORARY LOCATION DURING RESTRIPING WITH THE CONTRACTING OFFICER.
4. THE CONTRACTOR MUST PROVIDE A VACUUM AND POWER BROOM AT THE SITE AT ALL TIMES. ANY DEBRIS ON THE AIRFIELD OPERATIONS AREA RESULTING FROM THE CONSTRUCTION PROCESS MUST BE REMOVED IMMEDIATELY.
5. PLACE WARNING SIGNS NEAR THE BEGINNING OF THE WORK AREA AND WELL AHEAD OF THE WORK AREA FOR ALERTING APPROACHING PEDESTRIAN TRAFFIC FROM BOTH DIRECTIONS. PLACE SMALL MARKERS ALONG NEWLY PAINTED LINES TO CONTROL TRAFFIC AND PREVENT DAMAGE TO NEWLY PAINTED SURFACES. MARK PAINTING EQUIPMENT WITH LARGE WARNING SIGNS INDICATING PAINTING EQUIPMENT IN OPERATION.
6. ALL RESIDUES FROM REMOVAL OPERATION MUST BE COLLECTED FROM THE PAVEMENT SURFACE USING SELF-RECOVERING EQUIPMENT. THE CONTRACTOR MUST BE RESPONSIBLE FOR PROVIDING MEASURES TO PREVENT RESIDUE FROM REACHING STORM INLETS OR TURF AREAS.
7. THE AIRFIELD MUST REMAIN IN OPERATION DURING CONSTRUCTION. BASE BIDS ON AIRCRAFT MOVEMENT AREAS BEING ON ALL PAVED SURFACES ADJACENT TO WORK AREAS.
8. BASE BIDS ON IN ADDITION TO THE WORK INDICATED ON SHEETS CP401 TO CP404:
   A. REMOVE 500 LF OF 6" WIDE MARKING, THE EXACT LOCATION TO BE DETERMINED BY THE CONTRACTING OFFICER DURING WORK.
   B. PROVIDE 500 LF OF 6" WIDE RETRO-REFLECTIVE MARKING, THE EXACT LOCATION AND COLOR TO BE DETERMINED BY THE CONTRACTING OFFICER DURING WORK.
9. ALL MARKINGS MUST BE NON-RETROREFLECTIVE, U.N.O.
10. ALL LAYOUT POINTS INDICATED IN PLAN ARE TO THE CENTER OF THE PAINT LINE.

GRAPHIC SCALE

1" = 60' 0 60' 120' 180' 240'

SYM	DESCRIPTION	DATE	APPR
	MOD P00006 AND MOD P00007	10/2025	
	MOD P00005	05/2023	

NAVFAC

SOUTH CAROLINA No. 23067 01/13/23 BAMFORTH

SEAL

BAMFORTH ENGINEERS + SURVEYORS

A/E INFO

APPROVED

FOR COMMANDER NAVFAC

ACTIVITY

Approved by J. Scott Roberts, Asset Management Branch Head & Supervisory Facility Planner, PWD Beaufort, SC via email.

SATISFACTORY TO DATE 12/15/2022

DES	CAB	DRW CAD	CHK ALB
PM/DM	KTB/RLH		
BRANCH MANAGER	DLB		
CHIEF ENG/ARCH	EJA		
FIRE PROTECTION	DSN		

DEPARTMENT OF THE NAVY
NAVAL FACILITIES ENGINEERING SYSTEMS COMMAND
NAVAL FACILITIES ENGINEERING SYSTEMS COMMAND - MID-ATLANTIC
NORFOLK, VA

DC-CORE
MCAS BEAUFORT
BEAUFORT, SC

P-475 AIRCRAFT MAINTENANCE HANGAR - VOLUME 1 (BASE BID WITH OPTIONS)

APRON PAVEMENT MARKING DETAILS & NOTES

SCALE: GRAPHIC

EPROJECT NO.: 1363603

CONSTR. CONTR. NO.

NAVFAC DRAWING NO.
12859267

SHEET 95 OF 1412

CP501

DRAWFORM REVISION: 25 AUGUST 2020

FILE NAME: K:\Jobs\20021\BJWSA 10-02-25\BLDG-P475-1363603-CP501.dwg LAYOUT NAME: CP501 PLOTTED: Tuesday, November 11, 2025 - 3:23pm USER: mtlw

STORM STRUCTURE DATA

STRUCTURE NO.	STRUCTURE DETAILS	LOCATION
1	C.B. RIM = 26.00 INV. 15" (NE) = 21.35 INV. 15" (SE) = 21.35	N: 230862.48 E: 2084107.40
2	C.B. RIM = 25.50 INV. 15" (NW) = 21.19 INV. 15" (N) = 21.19 INV. 15" (E) = 21.19	N: 230821.35 E: 2084153.61
3	SCDOT TYPE 16 RIM = 25.84 INV. 15" (NW) = 20.89 INV. 15" (SW) = 20.89	N: 230849.49 E: 2084336.82
4	SCDOT TYPE 16 (NOTE 2) RIM = 25.66 INV. 15" (W) = 20.79 INV. 15" (NE) = 20.79	N: 230820.98 E: 2084311.44
5	SCDOT TYPE 16 RIM = 25.50 INV. 15" (NW) = 19.02 INV. 18" (NE) = 18.77	N: 230892.06 E: 2084374.71
6	SCDOT TYPE 16 RIM = 25.50 INV. 18" (SW) = 18.46 INV. 15" (NW) = 19.05 INV. 24" (NE) = 17.96	N: 231005.85 E: 2084476.01
7	C.B. RIM = 27.11 INV. 15" (SW) = 20.86	N: 231337.11 E: 2084457.05
8	C.B. RIM = 27.20 INV. 15" (NE) = 20.71 INV. 6" (NE) = 21.79 INV. 6" (W) = 23.85 INV. 15" (SE) = 20.71	N: 231292.90 E: 2084434.50
9	C.B. RIM = 27.18 INV. 15" (NW) = 20.64 INV. 15" (SE) = 20.64	N: 231277.88 E: 2084451.36
10	C.B. RIM = 27.16 INV. 15" (NW) = 20.55 INV. 6" (W) = 23.14 INV. 15" (S) = 20.55	N: 231256.47 E: 2084475.42
11	C.B. RIM = 26.98 INV. 15" (N) = 20.41 INV. 6" (W) = 23.66 INV. 15" (SE) = 20.41	N: 231213.58 E: 2084487.13
12	C.B. RIM = 27.16 INV. 15" (NW) = 20.25 INV. 18" (SE) = 20.00	N: 231170.16 E: 2084520.56
13	C.B. RIM = 26.93 INV. 18" (NW) = 19.93 INV. 6" (SW) = 21.20 INV. 18" (SE) = 19.93	N: 231154.54 E: 2084538.12
14	SCDOT TYPE 16 RIM = 25.50 INV. 18" (NW) = 19.77 INV. 24" (SW) = 17.66 INV. 30" (NE) = 17.46	N: 231119.65 E: 2084577.31
15	24" CATCH BASIN RIM = 24.78 INV. 12" (NW) = 21.75	N: 231206.65 E: 2084666.81
16	SCDOT TYPE 16 RIM = 25.64 INV. 30" (SW) = 16.96 INV. 6" (NW) = 21.53 INV. 12" (SE) = 21.55 INV. 30" (NE) = 16.96	N: 231212.64 E: 2084660.08

STORM STRUCTURE DATA

STRUCTURE NO.	STRUCTURE DETAILS	LOCATION
17	S. MH. RIM = 25.55 INV. 30" (SW) = 16.93 INV. 30" (SE) = 16.93	N: 231215.47 E: 2084667.87
18	S. MH (GRATE TOP) RIM = 25.18 INV. 30" (NW) = 16.46 INV. 30" (SE) = 16.46	N: 231136.34 E: 2084756.76
19	SCDOT TYPE 16 RIM = 23.75 INV. 15" (W) = 17.63	N: 231121.89 E: 2084821.10
20	S. MH. (108" DIA.) (NOTE 3) RIM = 24.87 INV. 30" (NW) = 16.29 INV. 15" (E) = 17.54 INV. 60" (SE) = 13.79	N: 231113.86 E: 2084789.95
21	S. MH. (108" DIA.) RIM = 22.25 INV. 60" (NW) = 13.54 INV. 60" (SW) = 13.54	N: 231036.70 E: 2084848.82
22	SCDOT TYPE 16 RIM = 22.93 INV. 15" (SE) = 17.08	N: 230954.94 E: 2084792.84
23	S. MH. (108" DIA.) RIM = 22.80 INV. 15" (NW) = 17.05 INV. 60" (NE) = 13.30 INV. 60" (SW) = 13.30	N: 230950.40 E: 2084801.07
24	HYDRODYNAMIC MANUFACTURED TREATMENT DEVICE (NOTE 5) RIM = 25.20 INV. 18" (SE) = 20.20	N: 230963.86 E: 2084755.03
25	C.B. RIM = 23.64 INV. 18" (NW) = 20.15 INV. 18" (SW) = 20.15	N: 230953.55 E: 2084766.61
26	F.E.S. INV. 18" (NE) = 20.00	N: 230922.39 E: 2084738.87
27	C.B. RIM = 26.02 INV. 15" (SE) = 20.31	N: 230913.12 E: 2084441.55
28	C.B. RIM = 25.72 INV. 15" (NW) = 20.22 INV. 15" (SE) = 20.22	N: 230894.24 E: 2084462.75
29	S. MH. (NOTE 6) RIM = 26.32 INV. 18" (SE) = 20.03	N: 230901.58 E: 2084478.58
30	C.B. RIM = 26.34 INV. 18" (NW) = 19.95 INV. 18" (SW) = 19.95	N: 230886.95 E: 2084495.02
31	C.B. RIM = 25.72 INV. 15" (NW) = 20.14 INV. 18" (NE) = 19.89 INV. 24" (SE) = 19.39	N: 230875.00 E: 2084484.38
32	C.B. RIM = 26.02 INV. 24" (NW) = 19.21 INV. 24" (SE) = 19.21	N: 230814.54 E: 2084552.29

STORM STRUCTURE DATA

STRUCTURE NO.	STRUCTURE DETAILS	LOCATION
33	C.B. RIM = 25.72 INV. 24" (NW) = 19.13 INV. 24" (SE) = 19.13	N: 230789.45 E: 2084580.48
34	SCDOT TYPE 16 RIM = 25.27 INV. 15" (NE) = 20.04	N: 230728.57 E: 2084539.87
35	SCDOT TYPE 16 RIM = 25.27 INV. 15" (SW) = 19.97 INV. 15" (E) = 19.97	N: 230753.89 E: 2084554.02
36	S. MH. (GRATE TOP) RIM = 24.90 INV. 15" (W) = 19.88 INV. 15" (NE) = 19.88	N: 230751.78 E: 2084589.70
37	C.B. RIM = 25.15 INV. 15" (NW) = 19.92	N: 230740.78 E: 2084635.15
38	C.B. RIM = 25.72 INV. 15" (SE) = 19.82 INV. 24" (NW) = 19.07 INV. 15" (SW) = 19.82 INV. 24" (NE) = 19.07	N: 230768.22 E: 2084604.33
39	F.E.S. INV. 24" (SW) = 19.00	N: 230795.11 E: 2084628.27
40	OUTLET STRUCTURE RIM = 22.80 INV. 24" (SE) = 16.94	N: 230803.14 E: 2084677.84
41	S. MH. (108" DIA.) (NOTE 7) RIM = 24.30 INV. 60" (NE) = 12.83 INV. 24" (NW) = 16.83	N: 230786.34 E: 2084708.91
42	AIRFIELD CATCH BASIN RIM = 27.59 INV. 15" (NE) = 21.99	N: 231277.28 E: 2084283.67
43	AIRFIELD CATCH BASIN RIM = 27.61 INV. 15" (SW) = 21.86 INV. 15" (NE) = 21.86	N: 231316.66 E: 2084318.72
44	AIRFIELD CATCH BASIN RIM = 27.44 INV. 15" (SW) = 21.74 INV. 15" (NE) = 21.74	N: 231350.71 E: 2084349.03
45	AIRFIELD CATCH BASIN RIM = 27.36 INV. 15" (SW) = 21.51 INV. 15" (NE) = 21.51	N: 231385.56 E: 2084380.06
46	AIRFIELD CATCH BASIN RIM = 27.20 INV. 15" (SW) = 20.76 INV. 15" (E) = 20.76	N: 231424.96 E: 2084448.60
47	AIRFIELD CATCH BASIN (NOTE 8) RIM = 26.14 INV. 15" (W) = 20.06	N: 231412.00 E: 2084519.61
48	AIRFIELD CATCH BASIN RIM = 27.56 INV. 15" (SW) = 22.81	N: 231245.68 E: 2084255.54

STORM STRUCTURE DATA

STRUCTURE NO.	STRUCTURE DETAILS	LOCATION
49	AIRFIELD CATCH BASIN RIM = 27.53 INV. 15" (NE) = 22.70 INV. 15" (SW) = 22.70	N: 231214.08 E: 2084227.41
50	AIRFIELD CATCH BASIN RIM = 27.51 INV. 15" (NE) = 22.58 INV. 18" (SW) = 22.33	N: 231182.48 E: 2084199.28
51	AIRFIELD CATCH BASIN RIM = 27.48 INV. 18" (NE) = 22.20 INV. 24" (SW) = 21.70	N: 231150.87 E: 2084171.14
52	AIRFIELD CATCH BASIN RIM = 27.45 INV. 24" (NE) = 21.62 INV. 24" (SW) = 21.62	N: 231119.27 E: 2084143.01
53	AIRFIELD CATCH BASIN RIM = 27.42 INV. 24" (NE) = 21.53 INV. 30" (SW) = 21.03	N: 231087.67 E: 2084114.88
54	AIRFIELD CATCH BASIN RIM = 27.39 INV. 30" (NE) = 20.95 INV. 30" (SW) = 20.95	N: 231056.07 E: 2084086.75
55	AIRFIELD CATCH BASIN RIM = 27.36 INV. 30" (NE) = 20.87 INV. 30" (SW) = 20.87	N: 231027.23 E: 2084061.08
56	AIRFIELD CATCH BASIN RIM = 27.29 INV. 15" (SE) = 21.99	N: 230993.18 E: 2084030.77
57	AIRFIELD S. MH. (NOTE 9) RIM = 27.77 INV. 15" (NW) = 21.91	N: 230972.07 E: 2084054.47
EX22	E. C.B. (NOTE 4) RIM = 27.53 INV. 30" (NE) = 20.80	N: 231020.07 E: 2084048.63
RD1	PIPE CONNECTION INV. 6" (SE) = 22.88	N: 230954.12 E: 2084108.10
RD2	S. CO. INV. 6" (NW) = 22.42 INV. 6" (SW) = 22.42	N: 230924.93 E: 2084140.90
RD3	PIPE CONNECTION INV. 6" (SE) = 22.69	N: 230940.30 E: 2084095.80
RD4	C.B. RIM = 27.43 INV. 6" (NE) = 22.23 INV. 6" (NW) = 22.23 INV. 15" (SW) = 21.48	N: 230911.11 E: 2084128.60
RD5	PIPE CONNECTION INV. 6" (S) = 22.91	N: 230909.97 E: 2084188.51
RD6	PIPE CONNECTION INV. 3" (SW) = 23.32	N: 230910.89 E: 2084189.88

STORM STRUCTURE DATA

STRUCTURE NO.	STRUCTURE DETAILS	LOCATION
RD7	3" X 6" WYE INV. 6" (N) = 22.88 INV. 3" (NE) = 23.00 INV. 6" (S) = 22.88	N: 230909.35 E: 2084188.51
RD8	PIPE CONNECTION INV. 3" (SW) = 23.25	N: 230858.43 E: 2084249.27
RD9	3" X 6" C.O. INV. 3" (NE) = 23.09 INV. 6" (NW) = 22.84	N: 230847.12 E: 2084239.20
RD10	PIPE CONNECTION INV. 3" (SW) = 23.64	N: 230871.07 E: 2084235.08
RD11	3" X 6" WYE INV. 6" (SE) = 22.64 INV. 3" (NE) = 22.77 INV. 6" (NW) = 22.64	N: 230859.76 E: 2084225.01
RD12	PIPE CONNECTION INV. 3" (SW) = 23.19	N: 230890.63 E: 2084213.10
RD13	3" X 6" WYE INV. 6" (SE) = 22.34 INV. 3" (NE) = 22.47 INV. 6" (NW) = 22.34	N: 230879.32 E: 2084203.04
RD14	C.B. RIM = 26.85 INV. 6" (SE) = 22.15 INV. 6" (N) = 22.15 INV. 15" (SW) = 21.40	N: 230891.15 E: 2084189.75
RD15	C.B. RIM = 26.40 INV. 15" (NE) = 21.28 INV. 15" (S) = 21.28	N: 230855.42 E: 2084157.94
RD16	C.B. (NOTE 1) RIM = 27.37 INV. 15" (SE) = 21.04	N: 230885.62 E: 2084296.29
RD17	S. CO. INV. 6" (NE) = 24.10	N: 230902.11 E: 2084315.42
RD18	6" WYE INV. 6" (SW) = 23.58 INV. 6" (NE) = 23.58	N: 230911.44 E: 2084323.73
RD19	PIPE CONNECTION INV. 6" (SE) = 24.10	N: 230927.56 E: 2084324.69
RD20	6" WYE INV. 6" (SW) = 23.05 INV. 6" (NW) = 23.05 INV. 6" (NE) = 23.05	N: 230920.91 E: 2084332.16
RD21	PIPE CONNECTION INV. 6" (S) = 24.31	N: 230967.89 E: 2084360.59
RD22	PIPE CONNECTION INV. 6" (SE) = 24.17	N: 230962.66 E: 2084355.93

STORM STRUCTURE DATA

STRUCTURE NO.	STRUCTURE DETAILS	LOCATION
RD23	6" WYE INV. 6" (NW) = 24.10 INV. 6" (N) = 24.10 INV. 6" (S) = 24.10	N: 230958.00 E: 2084361.17
RD24	S. CO. INV. 6" (N) = 24.02 INV. 6" (SW) = 24.02	N: 230953.78 E: 2084361.41
RD25	PIPE CONNECTION INV. 6" (SE) = 23.66	N: 230951.72 E: 2084346.19
RD26	6" WYE INV. 6" (NE) = 23.55 INV. 6" (NW) = 23.55 INV. 6" (SW) = 23.55	N: 230945.07 E: 2084353.66
RD27	C.B. RIM = 27.15 INV. 6" (SW) = 22.77 INV. 6" (NE) = 22.53 INV. 15" (SE) = 19.15	N: 230925.94 E: 2084336.64
RD28	PIPE CONNECTION INV. 6" (SE) = 25.26	N: 231006.55 E: 2084395.00
RD29	S. CO. INV. 6" (NW) = 25.24 INV. 6" (NE) = 25.24	N: 231005.55 E: 2084396.12
RD30	PIPE CONNECTION INV. 6" (SE) = 25.00	N: 231015.23 E: 2084402.73
RD31	6" WYE INV. 6" (SW) = 24.99 INV. 6" (NW) = 24.99 INV. 6" (NE) = 24.99	N: 231014.23 E: 2084403.85
RD32	S. CO. INV. 6" (SW) = 24.29 INV. 6" (E) = 24.29	N: 231037.79 E: 2084424.82
RD33	PIPE CONNECTION INV. 6" (SE) = 24.26	N: 231040.62 E: 2084425.33
RD34	6" WYE INV. 6" (W) = 24.22 INV. 6" (NW) = 24.22 INV. 6" (E) = 24.22	N: 231037.99 E: 2084428.29
RD35	PIPE CONNECTION INV. 6" (SE) = 24.10	N: 231095.90 E: 2084474.54
RD36	S. CO. INV. 6" (NW) = 23.88 INV. 6" (SW) = 23.88	N: 231088.92 E: 2084482.39
RD37	PIPE CONNECTION INV. 6" (SE) = 24.10	N: 231082.08 E: 2084462.24
RD38	6" WYE INV. 6" (NE) = 23.11 INV. 6" (NW) = 23.11 INV. 6" (SW) = 23.11	N: 231075.10 E: 2084470.09

NOTES:

1. REFER TO SHEET CG002 FOR NOTES.

SYM	DESCRIPTION	DATE	APPR
	MOD P00006 AND MOD P00007	10/2025	
	MOD P00005	05/2023	

NAVFAC

SOUTH CAROLINA PROFESSIONAL ENGINEER No. 23067 01/13/23 BAMFORTH

SEAL

BAMFORTH ENGINEERS + SURVEYORS

A/E INFO

APPROVED

FOR COMMANDER NAVFAC

ACTIVITY

Approved by J. Scott Roberts, Asset Management Branch Head & Supervisory Facility Planner, PWD Beaufort, SC via email.

SATISFACTORY TO DATE 12/15/2022

DES	CAB	DRW	CAD	CHK	ALB

PM/DM	KTB/RLH
BRANCH MANAGER	DLB
CHIEF ENG/ARCH	EJA
FIRE PROTECTION	DSN

DEPARTMENT OF THE NAVY
NAVAL FACILITIES ENGINEERING SYSTEMS COMMAND
NAVAL FACILITIES ENGINEERING SYSTEMS COMMAND - MID-ATLANTIC
NORFOLK, VA
DO CODE
MCAS BEAUFORT
BEAUFORT, SC

P-475 AIRCRAFT MAINTENANCE HANGAR - VOLUME 1 (BASE BID WITH OPTIONS)

STORM SCHEDULE

SCALE: NONE

EPROJECT NO.: 1363603

CONSTR. CONTR. NO.

NAVFAC DRAWING NO.
12859268

SHEET 96 OF 1412

CG001

DRAWFORM REVISION: 25 AUGUST 2020

FILE NAME: K:\Jobs\2022\BMSA 10-02-25\BLDG-P475-1363603-CG001.dwg LAYOUT NAME: CG001 PLOTTED: Thursday, November 06, 2025 - 2:21pm USER: mlw

STORM STRUCTURE DATA

STRUCTURE NO.	STRUCTURE DETAILS	LOCATION
RD39	PIPE CONNECTION INV. 6" (SE) = 24.10	N: 231068.26 E: 2084449.94
RD40	6" WYE INV. 6" (NE) = 22.34 INV. 6" (NW) = 22.34 INV. 6" (SW) = 22.34	N: 231061.28 E: 2084457.78
RD41	S. CO. INV. 6" (S) = 24.10	N: 231054.45 E: 2084437.64
RD42	C.B. RIM = 27.22 INV. 6" (NE) = 21.18 INV. 6" (N) = 23.82 INV. 6" (W) = 24.02 INV. 15" (SE) = 19.32	N: 231039.74 E: 2084437.94
RD43	PIPE CONNECTION INV. 6" (NW) = 23.80	N: 231357.23 E: 2084501.92
RD44	S. CO. INV. 6" (SE) = 23.72 INV. 6" (SW) = 23.72	N: 231362.27 E: 2084496.26
RD45	PIPE CONNECTION INV. 6" (NW) = 23.80	N: 231326.46 E: 2084474.53
RD46	6" WYE INV. 6" (NE) = 22.86 INV. 6" (SE) = 22.86 INV. 6" (SW) = 22.86	N: 231331.50 E: 2084468.87
RD47	PIPE CONNECTION INV. 6" (NW) = 23.80	N: 231295.70 E: 2084447.14
RD48	6" WYE INV. 6" (NE) = 22.01 INV. 6" (SE) = 22.01 INV. 6" (SW) = 22.01	N: 231300.74 E: 2084441.48
RD49	S. CO. INV. 6" (E) = 24.10	N: 231292.23 E: 2084409.08
RD50	PIPE CONNECTION INV. 6" (SE) = 24.10	N: 231278.41 E: 2084396.78
RD51	S. CO. INV. 6" (NW) = 23.56 INV. 6" (E) = 23.56	N: 231244.02 E: 2084435.42
RD52	S. CO. W/ 3" X 6" WYE INV. 6" (NE) = 24.21	N: 231199.68 E: 2084450.45
RD53	PIPE CONNECTION INV. 6" (E) = 24.19	N: 231203.32 E: 2084449.67
RD54	WYE INV. 6" (SW) = 24.14 INV. 6" (W) = 24.14 INV. 6" (NE) = 24.14	N: 231203.56 E: 2084453.90

STORM STRUCTURE DATA

STRUCTURE NO.	STRUCTURE DETAILS	LOCATION
RD55	S. CO. INV. 6" (SW) = 24.01 INV. 6" (E) = 24.01	N: 231210.84 E: 2084460.38
RD56	PIPE CONNECTION INV. 6" (SE) = 24.10	N: 231109.72 E: 2084486.84
RD57	S. CO. INV. 6" (NW) = 23.92 INV. 6" (NE) = 23.92	N: 231104.07 E: 2084493.19
RD58	PIPE CONNECTION INV. 6" (SE) = 24.10	N: 231123.54 E: 2084499.14
RD59	6" WYE INV. 6" (SW) = 23.15 INV. 6" (NW) = 23.15 INV. 6" (NE) = 23.15	N: 231117.89 E: 2084505.49
RD60	PIPE CONNECTION INV. 6" (SE) = 24.10	N: 231137.37 E: 2084511.46
RD61	6" WYE INV. 6" (SW) = 22.38 INV. 6" (NW) = 22.38 INV. 6" (NE) = 22.38	N: 231131.72 E: 2084517.81
RD62	PIPE CONNECTION INV. 6" (SE) = 23.86	N: 231199.77 E: 2084577.63
RD63	S. CO. INV. 6" (NW) = 23.69 INV. 6" (NE) = 23.69	N: 231188.77 E: 2084589.97
RD64	PIPE CONNECTION INV. 6" (SE) = 23.89	N: 231217.40 E: 2084593.33
RD65	6" WYE INV. 6" (SW) = 23.20 INV. 6" (NW) = 23.20 INV. 6" (NE) = 23.20	N: 231206.41 E: 2084605.68
RD66	PIPE CONNECTION INV. 6" (E) = 23.14	N: 231242.84 E: 2084610.06
RD68	S. CO. INV. 6" (W) = 22.56 INV. 6" (SE) = 22.56	N: 231243.72 E: 2084625.17
RD69	6" WYE INV. 6" (SW) = 22.35 INV. 6" (NW) = 22.35 INV. 6" (SE) = 22.35	N: 231236.91 E: 2084632.82

STORM STRUCTURE DATA NOTES:

1. CONNECT 10" PIPE, INV. = 22.30
2. CONNECT TO EXISTING 15" PIPE, INV. = 20.79
3. CONNECT TO EXISTING 60" PIPE, INV. = 13.79±
4. CONNECT TO EXISTING STRUCTURE
   INV. 24" (NE) = 21.89
   INV. 6" (E) = 21.98
   INV. 36" (SE) = 20.30; UNDETERMINED
   INV. (SW) = 20.88; UNDETERMINED
   INV. 30" (NW) = 20.26; UNDETERMINED
5. CONNECT 12" PIPE, INV. = 23.10
6. CONNECT 16" PIPE, INV. = 23.10
7. CONNECT TO EXISTING 60" PIPE, INV. = 12.83
8. CONNECT TO EXISTING 15" PIPE, INV. = 20.05
9. CONNECT TO EXISTING 36" PIPE, INV. 20.16±

STORM STRUCTURE DETAIL NOTES:

CATCH BASIN (C.B.) – REFER TO DETAIL CG505/A1

SCDOT TYPE 16 – REFER TO DETAILS ON SHEETS CG501 – CG504

STORM (S.) MANHOLE (MH.) – REFER TO SHEETS CG508 – CG511

HYDRODYNAMIC MANUFACTURED TREATMENT DEVICE – REFER TO CG507/A1

OUTLET STRUCTURE – REFER TO CG507/A4

AIRFIELD CATCH BASIN – REFER TO DETAIL CG506/A1

FLARED END SECTION (F.E.S.) – REFER TO DETAIL CG505/A3

STORM (S.) CLEANOUT (CO.) – REFER TO DETAIL CG505/B5

REFER TO SHEET CG513 FOR ROOF DRAIN (RD) PIPE CONNECTIONS

REFER TO SHEET LP401 FOR SUBDRAINAGE CONNECTIONS.

STORM PIPE DATA

PIPE CONNECTION	PIPE DETAILS	
1 – 2	62' – 15" S. @ 0.25%	CLASS III
2 – 4	158' – 15" S. @ 0.25%	
3 – 4	38' – 15" S. @ 0.25%	
5 – 6	152' – 18" S. @ 0.20%	CLASS III
6 – 14	152' – 24" S. @ 0.20%	CLASS III
7 – 8	50' – 15" S. @ 0.30%	CLASS III
8 – 9	23' – 15" S. @ 0.30%	
9 – 10	32' – 15" S. @ 0.30%	
10 – 11	44' – 15" S. @ 0.30%	
11 – 12	55' – 15" S. @ 0.30%	
12 – 13	24' – 18" S. @ 0.30%	
13 – 14	54' – 18" S. @ 0.30%	
14 – 16	124' – 30" S. @ 0.40%	
15 – 16	6' – 12" S. @ 3.19%	CLASS III
16 – 17	7' – 30" S. @ 0.40%	
17 – 18	119' – 30" S. @ 0.40%	CLASS III
18 – 20	40' – 30" S. @ 0.40%	
19 – 20	30' – 15" S. @ 0.30%	
20 – 21	97' – 60" S. @ 0.25%	
21 – 23	99' – 60" S. @ 0.25%	
22 – 23	9' – 15" S. @ 0.30%	
23 – 41	188' – 60" S. @ 0.25%	CLASS III
24 – 25	15' – 18" S. @ 0.35%	CLASS III
25 – 26	42' – 18" S. @ 0.35%	CLASS III
27 – 28	28' – 15" S. @ 0.30%	CLASS III
28 – 31	29' – 15" S. @ 0.30%	CLASS III
29 – 30	22' – 18" S. @ 0.35%	CLASS III
30 – 31	16' – 18" S. @ 0.35%	
31 – 32	91' – 24" S. @ 0.20%	CLASS III
32 – 33	38' – 24" S. @ 0.20%	CLASS III
33 – 38	32' – 24" S. @ 0.20%	
34 – 35	29' – 15" S. @ 0.25%	CLASS III
35 – 36	35' – 15" S. @ 0.25%	CLASS III
36 – 38	22' – 15" S. @ 0.25%	CLASS III
37 – 38	41' – 15" S. @ 0.25%	CLASS III
38 – 39	36' – 24" S. @ 0.20%	CLASS III
40 – 41	35' – 24" S. @ 0.30%	CLASS III
42 – 43	53' – 15" S. @ 0.25%	
43 – 44	46' – 15" S. @ 0.25%	
44 – 45	47' – 15" S. @ 0.50%	
45 – 46	76' – 15" S. @ 1.00%	
46 – 47	69' – 15" S. @ 1.00%	
48 – 49	42' – 15" S. @ 0.25%	
49 – 50	42' – 15" S. @ 0.30%	
50 – 51	42' – 18" S. @ 0.30%	

STORM PIPE DATA

PIPE CONNECTION	PIPE DETAILS	
51 – 52	42' – 24" S. @ 0.20%	
52 – 53	42' – 24" S. @ 0.20%	
53 – 54	42' – 30" S. @ 0.20%	
54 – 55	39' – 30" S. @ 0.20%	
55 – EX22	14' – 30" S. @ 0.50%	
56 – 57	31' – 15" S. @ 0.25%	
RD1 – RD2	44' – 6" S. @ 1.04%	
RD2 – RD4	18' – 6" S. @ 1.04%	
RD3 – RD4	44' – 6" S. @ 1.04%	
RD4 – 1	53' – 15" S. @ 0.25%	CLASS III
RD5 – RD7	1' – 6" S. @ 4.17%	
RD6 – RD7	2' – 3" S. @ 15.29%	
RD7 – RD14	18' – 6" S. @ 4.17%	
RD8 – RD9	15' – 3" S. @ 1.04%	
RD9 – RD11	19' – 6" S. @ 1.04%	
RD10 – RD11	15' – 3" S. @ 5.75%	
RD11 – RD13	29' – 6" S. @ 1.04%	
RD12 – RD13	15' – 3" S. @ 4.76%	
RD13 – RD14	18' – 6" S. @ 1.04%	
RD14 – RD15	48' – 15" S. @ 0.25%	CLASS III
RD15 – 2	35' – 15" S. @ 0.25%	CLASS III
RD16 – 3	54' – 15" S. @ 0.28%	
RD17 – RD18	12' – 6" S. @ 4.17%	
RD18 – RD20	13' – 6" S. @ 4.17%	
RD19 – RD20	10' – 6" S. @ 10.50%	
RD20 – RD27	7' – 6" S. @ 4.17%	
RD21 – RD23	10' – 6" S. @ 2.08%	
RD22 – RD23	7' – 6" S. @ 1.04%	
RD23 – RD24	4' – 6" S. @ 2.00%	
RD24 – RD26	12' – 6" S. @ 4.00%	
RD25 – RD26	10' – 6" S. @ 1.04%	
RD26 – RD27	26' – 6" S. @ 4.00%	
RD27 – 5	54' – 15" S. @ 0.25%	
RD28 – RD29	2' – 6" S. @ 1.04%	
RD29 – RD31	12' – 6" S. @ 2.20%	
RD30 – RD31	2' – 6" S. @ 1.04%	
RD31 – RD32	32' – 6" S. @ 2.20%	
RD32 – RD34	3' – 6" S. @ 2.20%	
RD33 – RD34	4' – 6" S. @ 1.04%	
RD34 – RD42	9' – 6" S. @ 2.20%	
RD35 – RD36	11' – 6" S. @ 2.08%	
RD36 – RD38	19' – 6" S. @ 4.17%	
RD37 – RD38	11' – 6" S. @ 9.42%	
RD38 – RD40	18' – 6" S. @ 4.17%	
RD39 – RD40	11' – 6" S. @ 16.76%	

STORM PIPE DATA

PIPE CONNECTION	PIPE DETAILS
RD40 – RD42	28' – 6" S. @ 4.17%
RD41 – RD42	13' – 6" S. @ 2.08%
RD42 – 6	54' – 15" S. @ 0.50%
RD43 – RD44	8' – 6" S. @ 1.04%
RD44 – RD46	41' – 6" S. @ 2.08%
RD45 – RD46	8' – 6" S. @ 12.35%
RD46 – RD48	41' – 6" S. @ 2.08%
RD47 – RD48	8' – 6" S. @ 23.66%
RD48 – 8	10' – 6" S. @ 2.08%
RD49 – 8	24' – 6" S. @ 1.04%
RD50 – RD51	52' – 6" S. @ 1.04%
RD51 – 10	41' – 6" S. @ 1.04%
RD52 – RD54	5' – 6" S. @ 1.35%
RD53 – RD54	4' – 6" S. @ 1.04%
RD54 – RD55	10' – 6" S. @ 1.35%
RD55 – 11	26' – 6" S. @ 1.35%
RD56 – RD57	8' – 6" S. @ 2.08%
RD57 – RD59	19' – 6" S. @ 4.17%
RD58 – RD59	8' – 6" S. @ 11.15%
RD59 – RD61	19' – 6" S. @ 4.17%
RD60 – RD61	8' – 6" S. @ 20.25%
RD61 – 13	31' – 6" S. @ 3.85%
RD62 – RD63	17' – 6" S. @ 1.04%
RD63 – RD65	24' – 6" S. @ 2.08%
RD64 – RD65	17' – 6" S. @ 4.20%
RD65 – RD69	41' – 6" S. @ 2.08%
RD66 – RD68	15' – 6" S. @ 3.78%
RD68 – RD69	10' – 6" S. @ 2.08%
RD69 – 16	39' – 6" S. @ 2.08%

STORM PIPE DATA NOTES:

ALL STORM PIPE 15" AND LARGER TO BE RCP CLASS V UNLESS NOTED OTHERWISE.

ALL STORM PIPE 12" AND SMALLER TO BE PVC, SDR 35.

REFER TO DETAIL CG506/A4 FOR PIPE TRENCH BEDDING DETAIL.

STM	DESCRIPTION	DATE	APPR
	MOD P00006 AND MOD P00007	10/2025	
	MOD P00005	05/2023	

NAVFAC

SOUTH CAROLINA PROFESSIONAL ENGINEER No. 23067 01/13/23 ANITA J. BAMFORTH

SEAL

BAMFORTH ENGINEERS + SURVEYORS

A/E INFO

APPROVED

FOR COMMANDER NAVFAC

ACTIVITY

Approved by J. Scott Roberts, Asset Management Branch Head & Supervisory Facility Planner, PWD Beaufort, SC via email.

SATISFACTORY TO DATE 12/15/2022

DES CAB	DRW CAD	CHK ALB	
PM/DM	KTB/RLH		
BRANCH MANAGER	DLB		
CHIEF ENG/ARCH	EJA		
FIRE PROTECTION	DSN		

DEPARTMENT OF THE NAVY
NAVAL FACILITIES ENGINEERING SYSTEMS COMMAND
NAVAL FACILITIES ENGINEERING SYSTEMS COMMAND - MID-ATLANTIC
NORFOLK, VA
DC-CORE
MCAS BEAUFORT
BEAUFORT, SC

P-475 AIRCRAFT MAINTENANCE HANGAR - VOLUME 1 (BASE BID WITH OPTIONS)

STORM SCHEDULE

SCALE: NONE

EPROJECT NO.: 1363603

CONSTR. CONTR. NO.

NAVFAC DRAWING NO. 12859269

SHEET 97 OF 1412

CG002

DRAWFORM REVISION: 25 AUGUST 2020

FILE NAME: K:\jobs\20021\BUMSA 10-02-25\BLDG-P475-1363603-CG002.dwg LAYOUT NAME: CG002 PLOTTED: Thursday, November 06, 2025 - 2:22pm USER: mlw

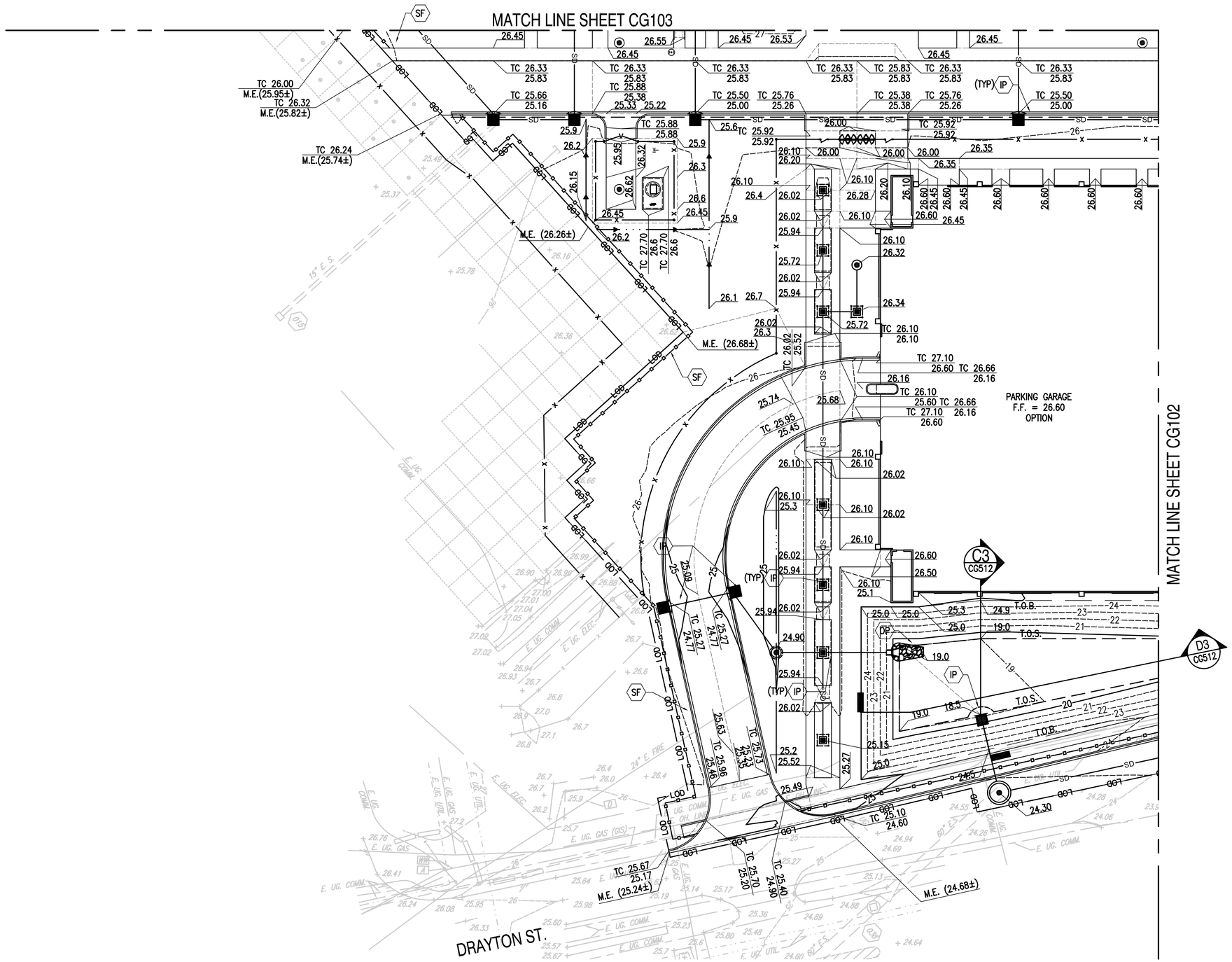

REFER TO VOLUME 6 FOR BASE BID

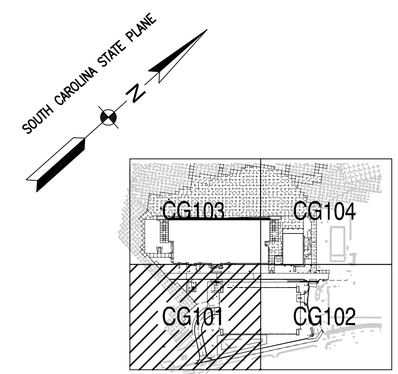

KEY PLAN

GRAPHIC SCALE

1" = 25' 0 25' 50' 75' 100'

E & S CONTROL MEASURE KEY NOTES

IP – INLET PROTECTION (REFER TO SHEETS C-503, C-504)

SF – SILT FENCE (REFER TO DETAIL C-506/B1)

OP – OUTLET PROTECTION (REFER TO DETAIL C-505/A1)

SHEET NOTES:

1. REFER TO SHEETS CG105 TO CG108 FOR STORMWATER DRAINAGE PLANS AND KEY NOTES.
2. REFER TO C-501 FOR GENERAL EROSION CONTROL NOTES.
3. REFER TO SHEET C-012 AND C-013 FOR SPECIFIC EROSION AND SEDIMENT CONTROL MEASURES AND LEGEND.

SYM	DESCRIPTION	DATE	APPR.
	MOD P00006 AND MOD P00007	10/2025	
	MOD P00005	05/2023	

NAVFAC

SOUTH CAROLINA No. 23067 01/13/23 BAMFORTH

SEAL

BAMFORTH ENGINEERS + SURVEYORS

A/E INFO

APPROVED

FOR COMMANDER NAVFAC

ACTIVITY

Approved by J. Scott Roberts, Asset Management Branch Head & Supervisory Facility Planner, PWD Beaufort, SC via email.

SATISFACTORY TO DATE 12/15/2022

DES	CAB	DRW CAD	CHK ALB
PM/DM	KTB/RLH		
BRANCH MANAGER	DLB		
CHIEF ENG/ARCH	EJA		
FIRE PROTECTION	DSN		

DEPARTMENT OF THE NAVY
NAVAL FACILITIES ENGINEERING SYSTEMS COMMAND
DC CORE

NAVAL FACILITIES ENGINEERING SYSTEMS COMMAND - MID-ATLANTIC
NORFOLK, VA

MCAS BEAUFORT
BEAUFORT, SC

P-475 AIRCRAFT MAINTENANCE HANGAR - VOLUME 1 (BASE BID WITH OPTIONS)

GRADING AND EROSION CONTROL PLAN

SCALE: GRAPHIC

EPROJECT NO.: 1363603

CONSTR. CONTR. NO.

NAVFAC DRAWING NO. 12859270

SHEET 98 OF 1412

CG101

DRAWFORM REVISION: 25 AUGUST 2020

FILE NAME: K:\jobs\20021\BJMSA 10-02-25\BL00-P475-1363603-CG101.dwg LAYOUT NAME: CG101 PLOTTED: Thursday, November 06, 2025 - 2:22pm USER: mtw

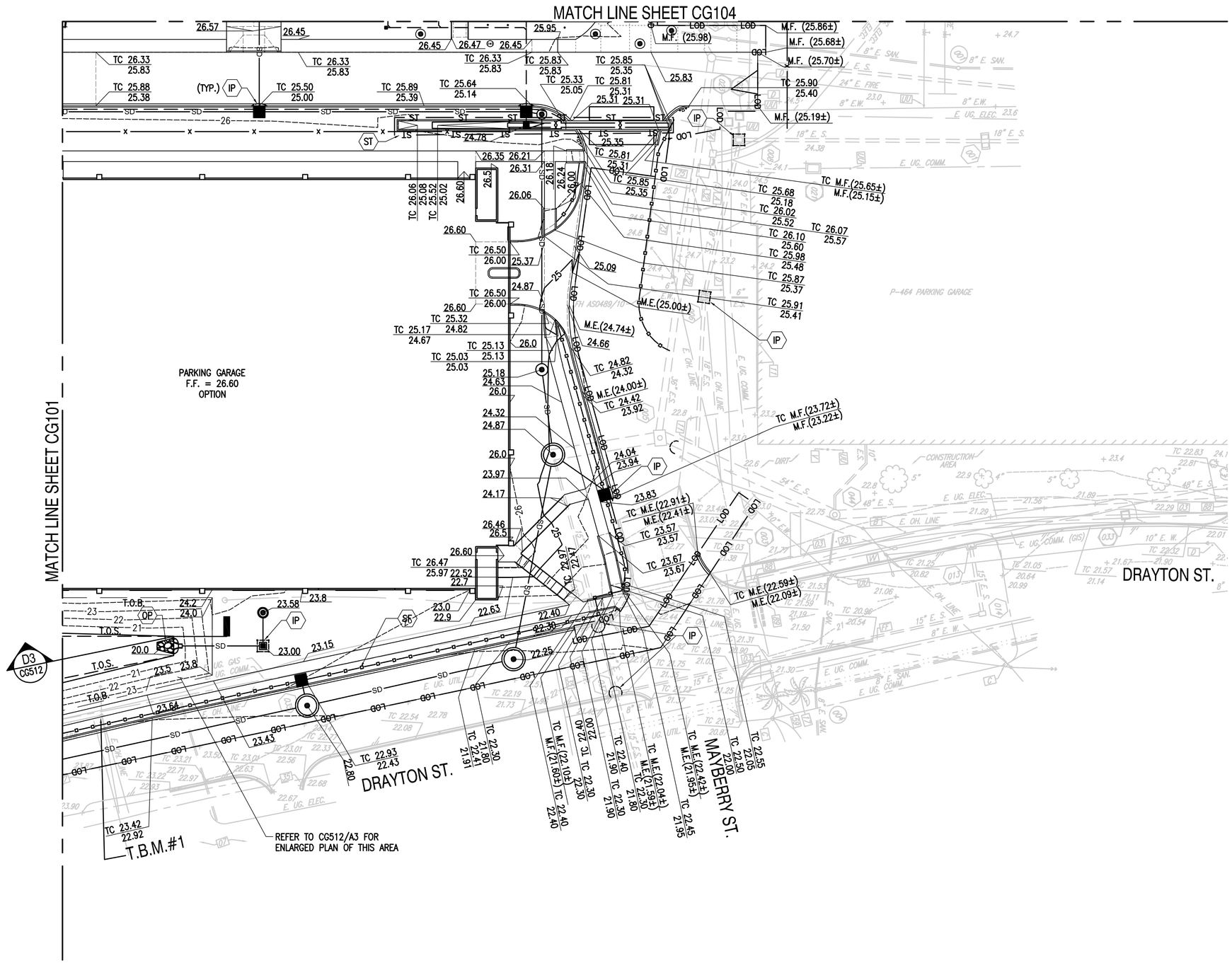

E & S CONTROL MEASURE KEY NOTES

IP – INLET PROTECTION (REFER TO SHEETS C-503, C-504)

SF – SILT FENCE (REFER TO DETAIL C-506/B1)

OP – OUTLET PROTECTION (REFER TO DETAIL C-505/A1)

ST – SEDIMENT TUBE (REFER TO DETAIL C-502/A4)

SHEET NOTES:

1. REFER TO SHEETS CG105 TO CG108 FOR STORMWATER DRAINAGE PLANS AND KEY NOTES.
2. REFER TO C-501 FOR GENERAL EROSION CONTROL NOTES.
3. REFER TO SHEET C-012 AND C-013 FOR SPECIFIC EROSION AND SEDIMENT CONTROL MEASURES AND LEGEND.

REFER TO VOLUME 6 FOR BASE BID

SOUTH CAROLINA STATE PLANE

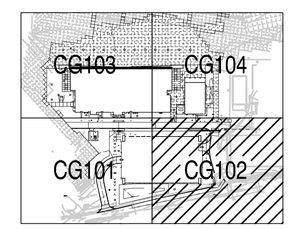

KEY PLAN

GRAPHIC SCALE

1" = 25' 0 25' 50' 75' 100'

SYM	DESCRIPTION	DATE	APPR.
	MOD P00006 AND MOD P00007	10/2025	
	MOD P00005	05/2023	

NAVFAC

SOUTH CAROLINA No. 23067 01/13/23 SEAL

BAMFORTH ENGINEERS + SURVEYORS

A/E INFO

APPROVED FOR COMMANDER NAVFAC

ACTIVITY

Approved by J. Scott Roberts, Asset Management Branch Head & Supervisory Facility Planner, PWD Beaufort, SC via email.

SATISFACTORY TO	DATE	12/15/2022	
DES CAB	DRW CAD	CHK ALB	
PM/DM	KTB/RLH		
BRANCH MANAGER	DLB		
CHIEF ENG/ARCH	EJA		
FIRE PROTECTION	DSN		

DEPARTMENT OF THE NAVY
NAVAL FACILITIES ENGINEERING SYSTEMS COMMAND
NAVAL FACILITIES ENGINEERING SYSTEMS COMMAND - MID-ATLANTIC
DC CORE
NORFOLK, VA
MCAS BEAUFORT
BEAUFORT, SC

P-475 AIRCRAFT MAINTENANCE HANGAR - VOLUME 1 (BASE BID WITH OPTIONS)

GRADING AND EROSION CONTROL PLAN

SCALE:	GRAPHIC
EPROJECT NO.:	1363603
CONSTR. CONTR. NO.	
NAVFAC DRAWING NO.	12859271
SHEET	99 OF 1412

CG102

DRAWFORM REVISION: 25 AUGUST 2020

FILE NAME: K:\jobs\20021\BUMSA 10-02-25\BLDG-P475-1363603-CG102.dwg LAYOUT NAME: CG102 PLOTTED: Thursday, November 06, 2025 - 2:22pm USER: mlw

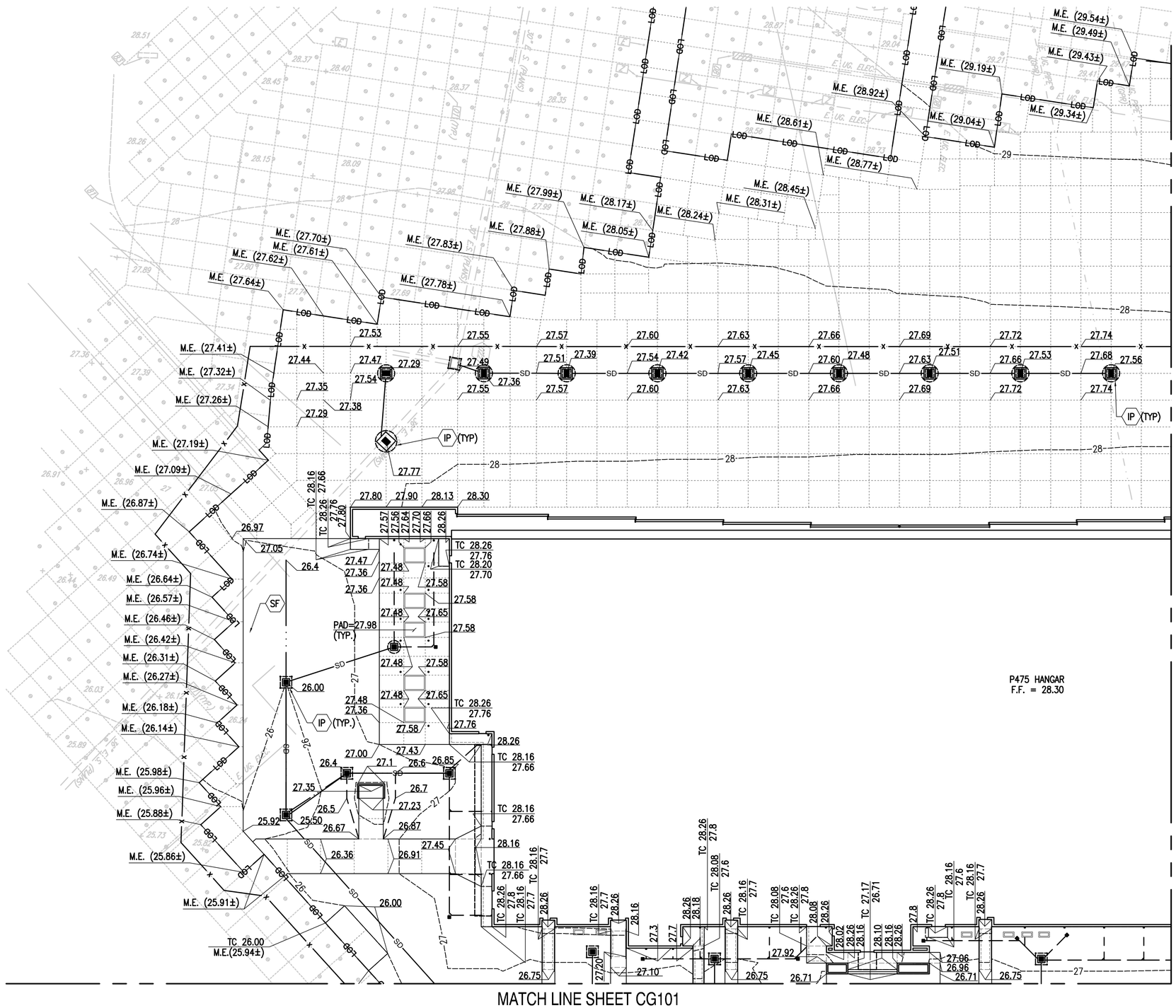

E & S CONTROL MEASURE KEY NOTES

IP – INLET PROTECTION (REFER TO SHEETS C-503, C-504)

SF – SILT FENCE (REFER TO DETAIL C-506/B1)

SHEET NOTES:

1. REFER TO SHEETS CG105 TO CG108 FOR STORMWATER DRAINAGE PLANS AND KEY NOTES.
2. REFER TO C-501 FOR GENERAL EROSION CONTROL NOTES AND EROSION CONTROL AND GRADING FOR OFFSITE UTILITY TRENCHES NOTES.
3. REFER TO TELECOMMUNICATION AND ELECTRICAL SITE PLAN SHEETS FOR OFFSITE UTILITY LOCATION.
4. REFER TO SHEET C-012 AND C-013 FOR SPECIFIC EROSION AND SEDIMENT CONTROL MEASURES AND LEGEND.

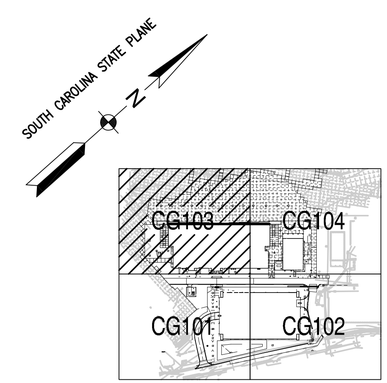

KEY PLAN

GRAPHIC SCALE

1" = 25' 0 25' 50' 75' 100'

SYM	DESCRIPTION	DATE	APPR.
	MOD P00006 AND MOD P00007	10/2025	
	MOD P00005	05/2023	

NAVFAC

SOUTH CAROLINA No. 23067 01/13/23 PROFESSIONAL ENGINEER

SEAL

BAMFORTH ENGINEERS + SURVEYORS

A/E INFO:

APPROVED

FOR COMMANDER NAVFAC

ACTIVITY

Approved by J. Scott Roberts, Asset Management Branch Head & Supervisory Facility Planner, PWD Beaufort, SC via email.

SATISFACTORY TO DATE 12/15/2022

DES	CAB	DRW CAD	CHK ALB
PM/DM	KTB/RLH		
BRANCH MANAGER	DLB		
CHIEF ENG/ARCH	EJA		
FIRE PROTECTION	DSN		

DEPARTMENT OF THE NAVY
NAVAL FACILITIES ENGINEERING SYSTEMS COMMAND
NAVAL FACILITIES ENGINEERING SYSTEMS COMMAND - MID-ATLANTIC
NORFOLK, VA
DC CORE
MCAS BEAUFORT

BEAUFORT, SC

P-475 AIRCRAFT MAINTENANCE HANGAR - VOLUME 1 (BASE BID WITH OPTIONS)

GRADING AND EROSION CONTROL PLAN

SCALE: GRAPHIC

EPROJECT NO.: 1363603

CONSTR. CONTR. NO.

NAVFAC DRAWING NO. 12859272

SHEET 100 OF 1412

CG103

DRAWFORM REVISION: 25 AUGUST 2020

FILE NAME: K:\Jobs\20021\BMSA 10-02-23\BLDG-P475-1363603-CG103.dwg LAYOUT NAME: CG103 PLOTTED: Thursday, November 06, 2025 - 2:22pm USER: mtw

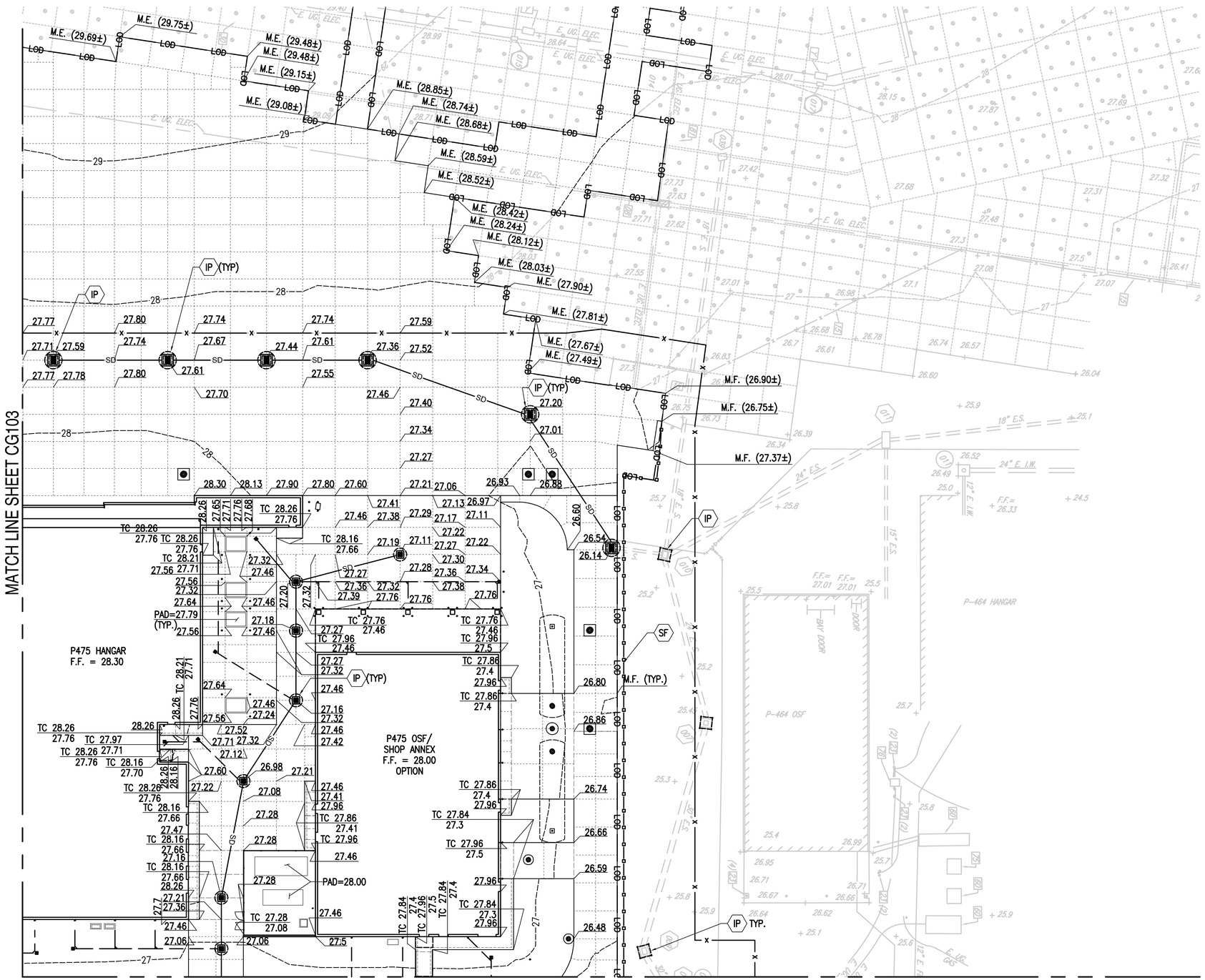

E & S CONTROL MEASURE KEY NOTES

IP – INLET PROTECTION (REFER TO SHEETS C-503 AND C-504)

SF – SILT FENCE (REFER TO DETAIL C-506/B1)

SHEET NOTES:

1. REFER TO SHEETS CG105 TO CG108 FOR STORMWATER DRAINAGE PLANS AND KEY NOTES.
2. REFER TO C-501 FOR GENERAL EROSION CONTROL NOTES AND EROSION CONTROL AND GRADING FOR OFFSITE UTILITY TRENCHES NOTES.
3. REFER TO TELECOMMUNICATION AND ELECTRICAL SITE PLAN SHEETS FOR OFFSITE UTILITY LOCATION.
4. REFER TO SHEET C-012 AND C-013 FOR SPECIFIC EROSION AND SEDIMENT CONTROL MEASURES AND LEGEND.

REFER TO VOLUME 6 FOR BASE BID

SOUTH CAROLINA STATE PLANE

N

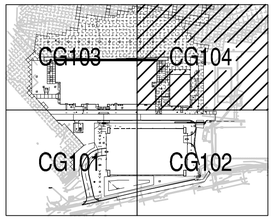

KEY PLAN

GRAPHIC SCALE

1" = 25' 0 25' 50' 75' 100'

SYM	DESCRIPTION	DATE	APPR
	MOD P00006 AND MOD P00007	10/2025	
	MOD P00005	05/2023	

NAVFAC

SOUTH CAROLINA No. 23067 01/13/23 SEAL

BAMFORTH ENGINEERS + SURVEYORS

A/E INFO

APPROVED

FOR COMMANDER NAVFAC

ACTIVITY

Approved by J. Scott Roberts, Asset Management Branch Head & Supervisory Facility Planner, PWD Beaufort, SC via email.

SATISFACTORY TO | DATE 12/15/2022

DES CAB | DRW CAD | CHK ALB

PM/DM KTB/RLH

BRANCH MANAGER DLB

CHIEF ENG/ARCH EJA

FIRE PROTECTION DSN

DEPARTMENT OF THE NAVY
NAVAL FACILITIES ENGINEERING SYSTEMS COMMAND
NAVAL FACILITIES ENGINEERING SYSTEMS COMMAND - MID-ATLANTIC
NORFOLK, VA
DC CODE
MCAS BEAUFORT
BEAUFORT, SC

P-475 AIRCRAFT MAINTENANCE HANGAR - VOLUME 1 (BASE BID WITH OPTIONS)

GRADING AND EROSION CONTROL PLAN

SCALE: GRAPHIC

EPROJECT NO.: 1363603

CONSTR. CONTR. NO.

NAVFAC DRAWING NO.
12859273

SHEET 101 OF 1412

CG104

DRAWFORM REVISION: 25 AUGUST 2020

FILE NAME: K:\Jobs\20021\BAMSA 10-02-25\BLDG-P475-1363603-CG104.dwg LAYOUT NAME: CG104 PLOTTED: Thursday, November 06, 2025 - 2:23pm USER: mtw

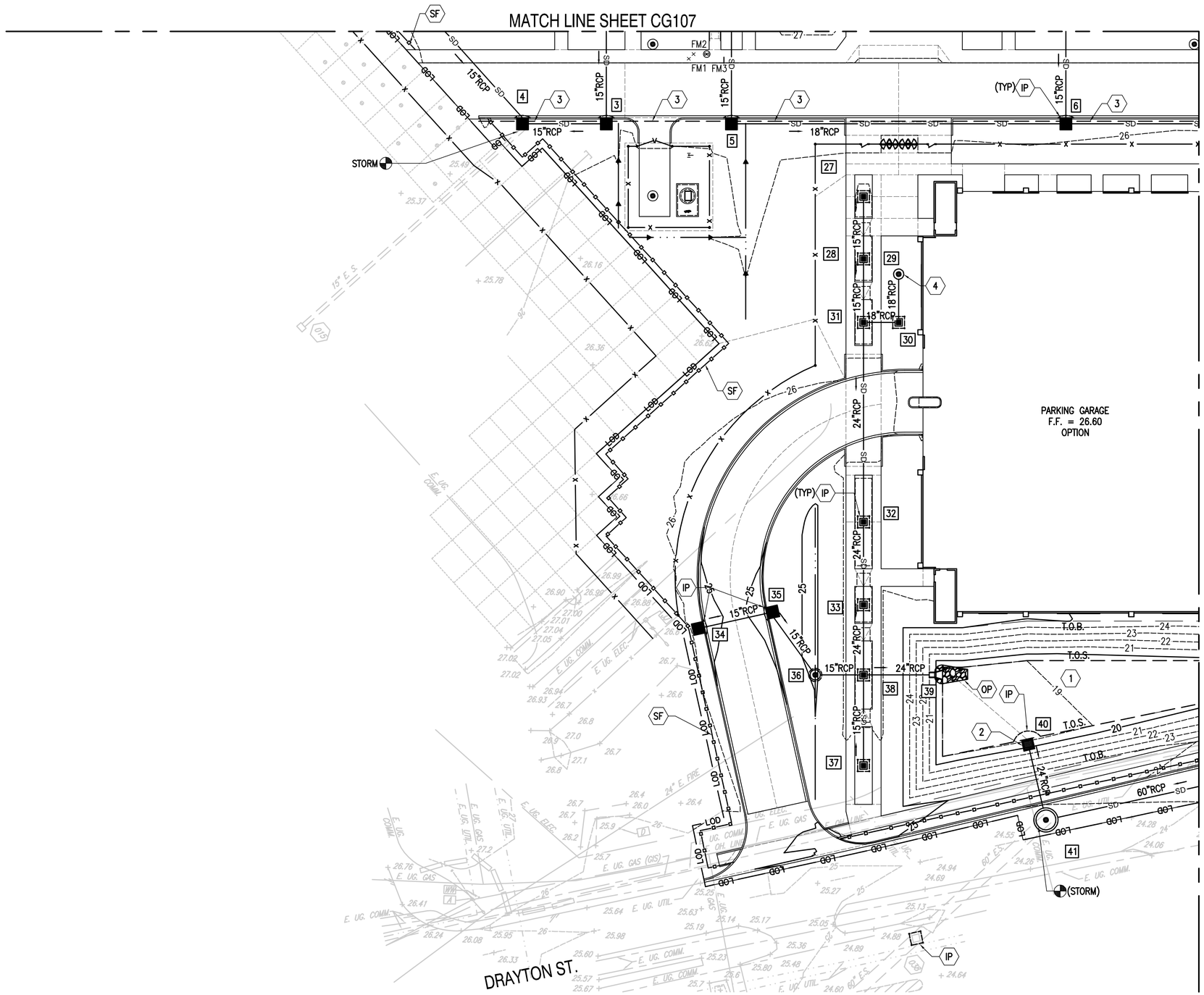

STORMWATER KEY NOTES (THIS SHEET ONLY)

1. DRY DETENTION AREA (REFER TO CG512)
2. DETENTION AREA OUTLET STRUCTURE (REFER TO CG507/A4)
3. 6-INCH SUBDRAINAGE PIPE (REFER TO DETAIL CS501/A3)
4. ROOF DRAIN CONNECTION (REFER TO PLUMBING PLANS)

SHEET NOTES:

1. REFER TO SHEETS CG001 AND CG002 FOR STORM SCHEDULES AND STRUCTURE DETAILS.
2. REFER TO CG702 FOR OVERALL DRAINAGE PLAN.
3. REFER TO C-501 FOR GENERAL EROSION CONTROL NOTES.
4. REFER TO CG101 TO CG104 FOR EROSION CONTROL MEASURE KEY NOTES.
5. REFER TO SHEET C-012 AND C-013 FOR SPECIFIC EROSION AND SEDIMENT CONTROL MEASURES AND LEGEND.

REFER TO VOLUME 6 FOR BASE BID

SOUTH CAROLINA STATE PLANE

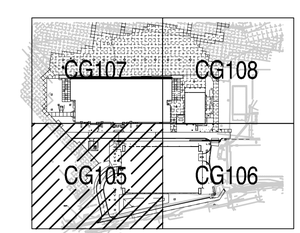

KEY PLAN

GRAPHIC SCALE

1" = 25' 0 25' 50' 75' 100'

SYM	DESCRIPTION	DATE	APPR.
	MOD P00006 AND MOD P00007	10/2025	
	MOD P00005	05/2023	

NAVFAC

SOUTH CAROLINA No. 23067 01/13/23 BAMFORTH

SEAL

BAMFORTH ENGINEERS + SURVEYORS

A/E INFO

APPROVED

FOR COMMANDER NAVFAC

ACTIVITY

Approved by J. Scott Roberts, Asset Management Branch Head & Supervisory Facility Planner, PWD Beaufort, SC via email.

SATISFACTORY TO DATE 12/15/2022

DES	CAB	DRW CAD	CHK ALB
PM/DM	KTB/RLH		
BRANCH MANAGER	DLB		
CHIEF ENG/ARCH	EJA		
FIRE PROTECTION	DSN		

DEPARTMENT OF THE NAVY
NAVAL FACILITIES ENGINEERING SYSTEMS COMMAND
DC CORE
NAVAL FACILITIES ENGINEERING SYSTEMS COMMAND - MID-ATLANTIC
NORFOLK, VA

MCAS BEAUFORT
BEAUFORT, SC

P-475 AIRCRAFT MAINTENANCE HANGAR - VOLUME 1 (BASE BID WITH OPTIONS)

STORM DRAINAGE PLAN

SCALE: GRAPHIC
EPROJECT NO.: 1363603
CONSTR. CONTR. NO.
NAVFAC DRAWING NO. 12859274
SHEET 102 OF 1412

CG105

DRAWFORM REVISION: 25 AUGUST 2020

FILE NAME: K:\Jobs\20021\BMSA 10-02-23\BLDG-P475-1363603-CG105.dwg LAYOUT NAME: CG105 PLOTTED: Thursday, November 06, 2025 - 2:23pm USER: mtw

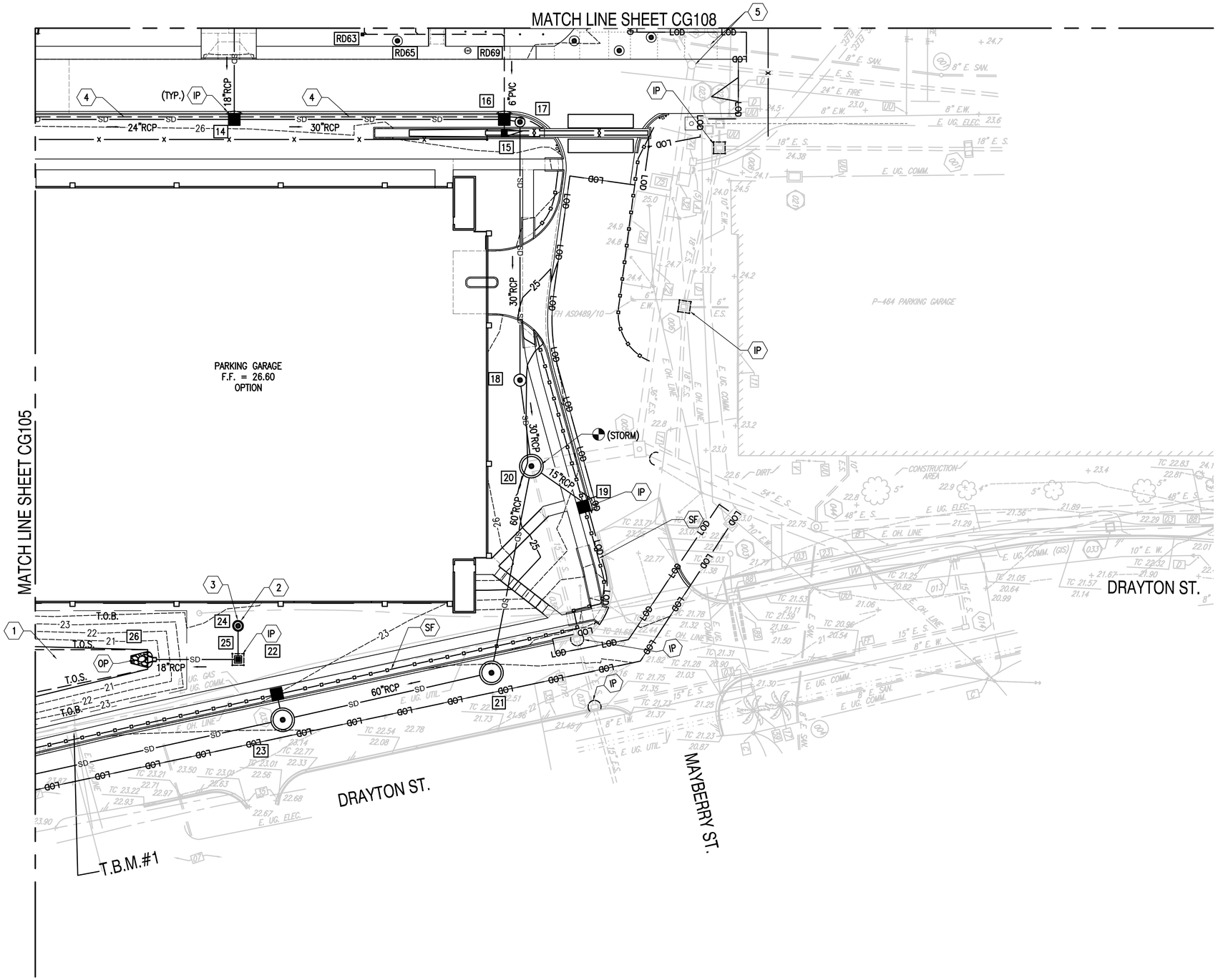

STORMWATER KEY NOTES (THIS SHEET ONLY)

1. DRY DETENTION AREA (REFER TO CG512)
2. HYDRODYNAMIC MANUFACTURED TREATMENT DEVICE (MTD) (REFER TO DETAIL CG507/A1)
3. ROOF DRAIN CONNECTION (REFER TO PLUMBING PLANS)
4. 6-INCH SUBDRAINAGE PIPE (REFER TO DETAIL CS501/A3)
5. ADJUST RIM TO FINISH GRADE

SHEET NOTES:

1. REFER TO SHEETS CG001 AND CG002 FOR STORM SCHEDULES AND STRUCTURE DETAILS.
2. REFER TO CG702 FOR OVERALL DRAINAGE PLAN.
3. REFER TO C-501 FOR GENERAL EROSION CONTROL NOTES.
4. REFER TO CG101 TO CG104 FOR EROSION CONTROL MEASURE KEY NOTES.
5. REFER TO SHEET C-012 AND C-013 FOR SPECIFIC EROSION AND SEDIMENT CONTROL MEASURES AND LEGEND.

REFER TO VOLUME 6 FOR BASE BID

SOUTH CAROLINA STATE PLANE

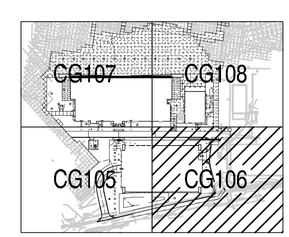

KEY PLAN

GRAPHIC SCALE

1" = 25' 0 25' 50' 75' 100'

SYM	DESCRIPTION	DATE	APPR.
	MOD P00006 AND MOD P00007	10/2025	
	MOD P00005	05/2023	

NAVFAC

SOUTH CAROLINA No. 23067 01/13/23 BAMFORTH

SEAL

BAMFORTH ENGINEERS + SURVEYORS

A/E INFO

APPROVED

FOR COMMANDER NAVFAC

ACTIVITY

Approved by J. Scott Roberts, Asset Management Branch Head & Supervisory Facility Planner, PWD Beaufort, SC via email.

SATISFACTORY TO DATE 12/15/2022

DES	CAB	DRW CAD	CHK ALB
PM/DM	KTB/RLH		
BRANCH MANAGER	DLB		
CHIEF ENG/ARCH	EJA		
FIRE PROTECTION	DSN		

DEPARTMENT OF THE NAVY
NAVAL FACILITIES ENGINEERING SYSTEMS COMMAND
DC CORE
NAVAL FACILITIES ENGINEERING SYSTEMS COMMAND - MID-ATLANTIC NORFOLK, VA
MCAS BEAUFORT
BEAUFORT, SC

P-475 AIRCRAFT MAINTENANCE HANGAR - VOLUME 1 (BASE BID WITH OPTIONS)

STORM DRAINAGE PLAN

SCALE: GRAPHIC
EPROJECT NO.: 1363603
CONSTR. CONTR. NO.
NAVFAC DRAWING NO. 12859275
SHEET 103 OF 1412

CG106

DRAWFORM REVISION: 25 AUGUST 2020

FILE NAME: K:\Jobs\20021\BMSA 10-02-23\BLDG-P475-1363603-CG106.dwg LAYOUT NAME: CG106 PLOTTED: Thursday, November 06, 2025 - 2:23pm USER: mtw

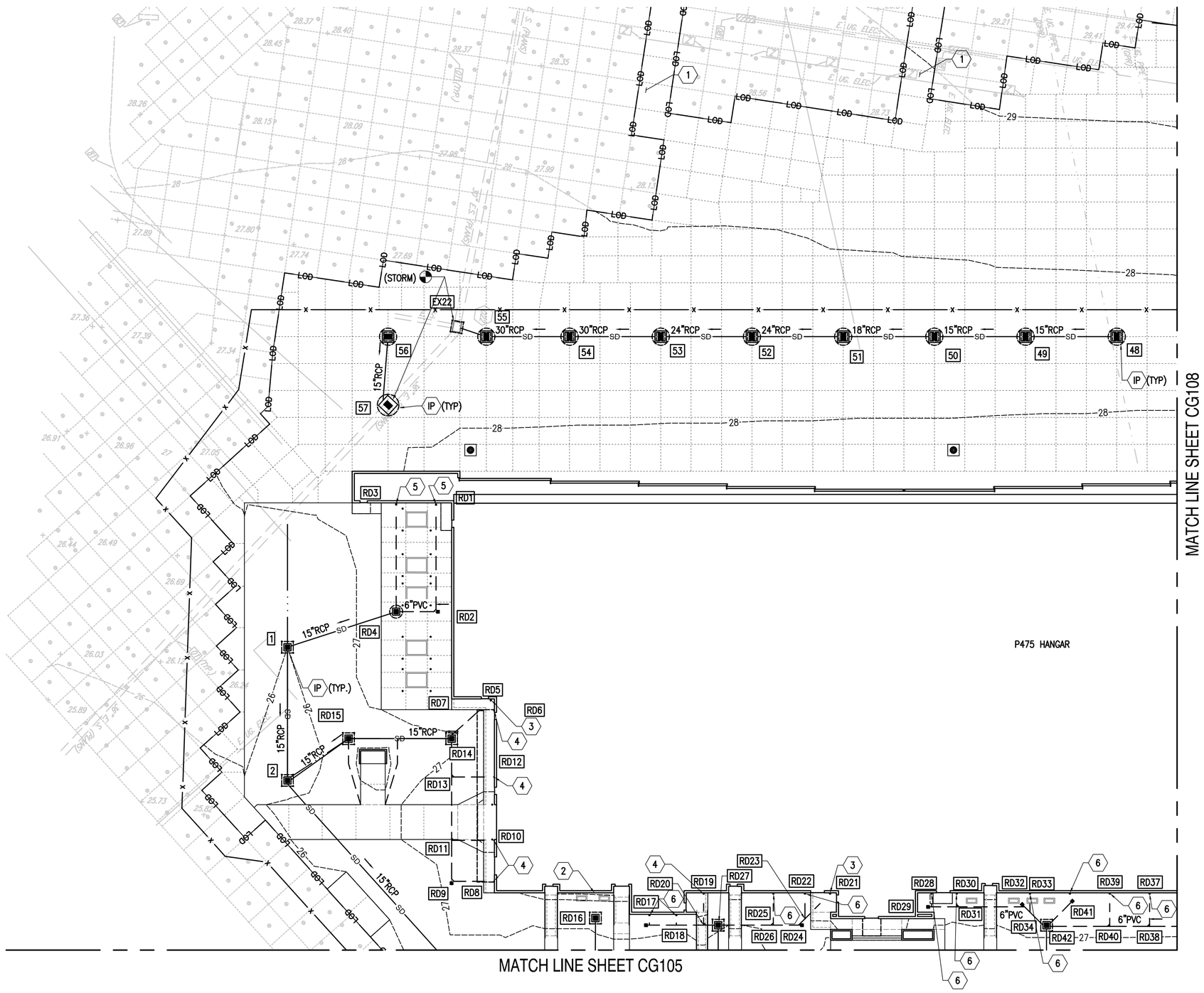

STORMWATER KEY NOTES (THIS SHEET ONLY)

1. REFER TO ELECTRICAL AND TELECOMMUNICATION PLANS FOR OFFSITE UTILITY LOCATION.
2. ROOF DRAIN CONNECTION (REFER TO PLUMBING PLANS.)
3. DOWNSPOUT BOOT OFFSET – CONCRETE SIDEWALK (REFER TO DETAIL CG513/C1)
4. DOWNSPOUT BOOT 45 DEGREE – CONCRETE SIDEWALK (REFER TO DETAIL CG513/C3)
5. DOWNSPOUT BOOT 45 DEGREE – CONCRETE SIDEWALK (REFER TO DETAIL CG513/A1)
6. DOWNSPOUT BOOT 45 DEGREE – GROUND (REFER TO DETAIL CG513/A3)

SHEET NOTES:

1. REFER TO SHEETS CG001 AND CG002 FOR STORM SCHEDULES AND STRUCTURE DETAILS.
2. REFER TO CG702 FOR OVERALL DRAINAGE PLAN.
3. REFER TO C-501 FOR GENERAL EROSION CONTROL NOTES AND EROSION CONTROL AND GRADING FOR OFFSITE UTILITY TRENCHES NOTES.
4. REFER TO CG101 TO CG104 FOR EROSION CONTROL MEASURE KEY NOTES.
5. REFER TO SHEET C-012 AND C-013 FOR SPECIFIC EROSION AND SEDIMENT CONTROL MEASURES AND LEGEND.

SOUTH CAROLINA STATE PLANE

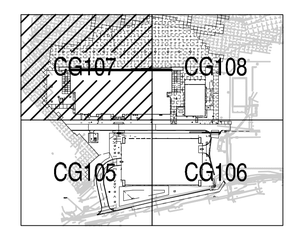

KEY PLAN

GRAPHIC SCALE

1" = 25' 0 25' 50' 75' 100'

SYM	DESCRIPTION	DATE	APPR
	MOD P00006 AND MOD P00007	10/2025	
	MOD P00005	05/2023	

NAVFAC

SOUTH CAROLINA No. 23067 01/13/23 BAMFORTH

BAMFORTH ENGINEERS + SURVEYORS

A/E INFO

APPROVED

FOR COMMANDER NAVFAC

ACTIVITY

Approved by J. Scott Roberts, Asset Management Branch Head & Supervisory Facility Planner, PWD Beaufort, SC via email.

SATISFACTORY TO DATE 12/15/2022

DES	CAB	DRW CAD	CHK ALB
PM/DM	KTB/RLH		
BRANCH MANAGER	DLB		
CHIEF ENG/ARCH	EJA		
FIRE PROTECTION	DSN		

DEPARTMENT OF THE NAVY
NAVAL FACILITIES ENGINEERING SYSTEMS COMMAND
NAVAL FACILITIES ENGINEERING SYSTEMS COMMAND - MID-ATLANTIC NORFOLK, VA
DC CORE
MCAS BEAUFORT
BEAUFORT, SC

P-475 AIRCRAFT MAINTENANCE HANGAR - VOLUME 1 (BASE BID WITH OPTIONS)

STORM DRAINAGE PLAN

SCALE: GRAPHIC
EPROJECT NO.: 1363603
CONSTR. CONTR. NO.
NAVFAC DRAWING NO. 12859276
SHEET 104 OF 1412

CG107

DRAWFORM REVISION: 25 AUGUST 2020

FILE NAME: K:\Jobs\20021\BJMSA 10-02-25\BLDG-P475-1363603-CG107.dwg LAYOUT NAME: CG107 PLOTTED: Thursday, November 06, 2025 - 2:23pm USER: mlw

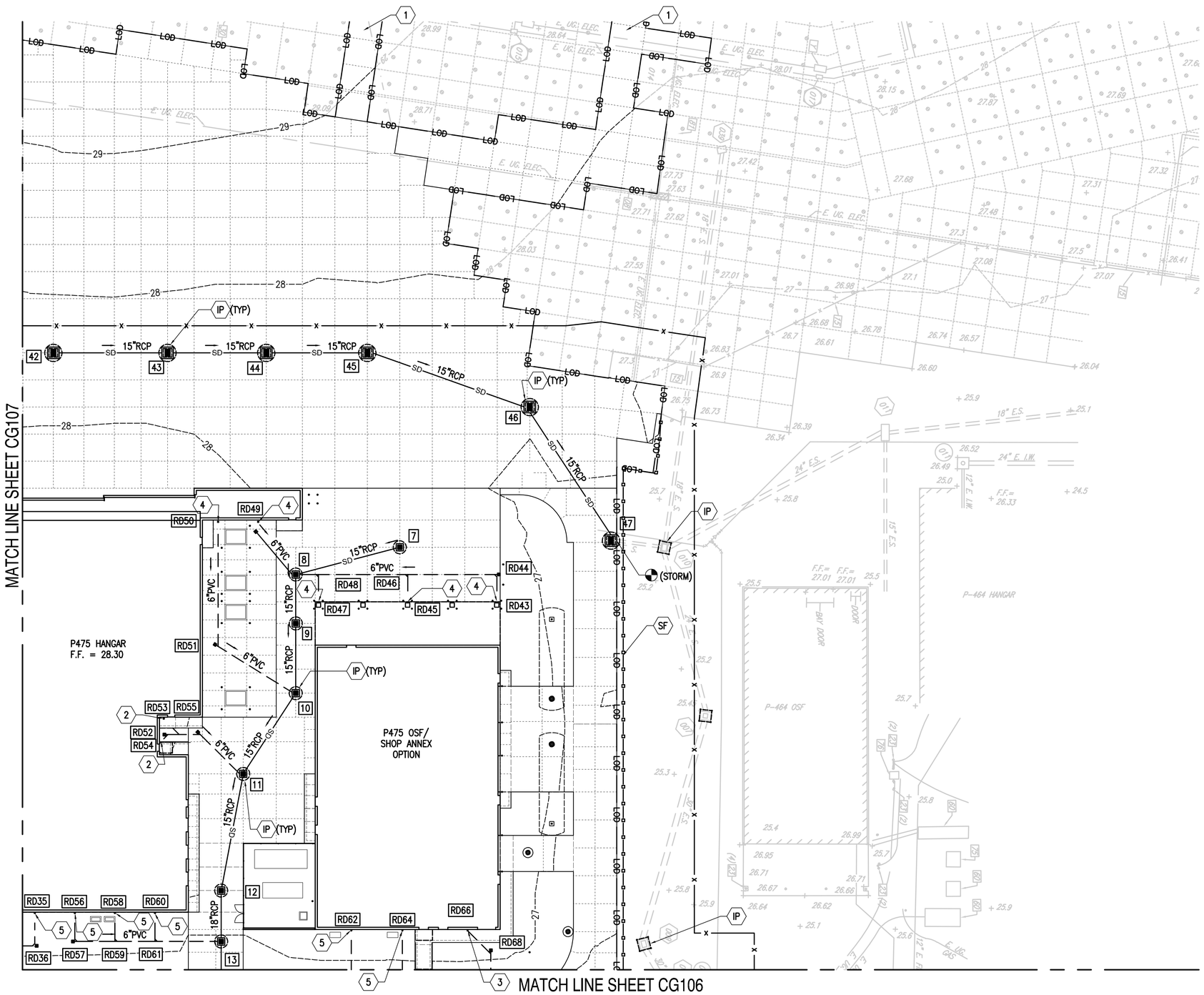

STORMWATER KEY NOTES (THIS SHEET ONLY)

1. REFER TO ELECTRICAL AND TELECOMMUNICATION SHEETS FOR OFFSITE UTILITY LOCATION.
2. DOWNSPOUT BOOT OFFSET – CONCRETE SIDEWALK (REFER TO DETAIL CG513/C1)
3. DOWNSPOUT BOOT 45 DEGREE – CONCRETE SIDEWALK (REFER TO DETAIL CG513/C3)
4. DOWNSPOUT BOOT 45 DEGREE – CONCRETE SIDEWALK (REFER TO DETAIL CG513/A1)
5. DOWNSPOUT BOOT 45 DEGREE – GROUND (REFER TO DETAIL CG513/A3)

SHEET NOTES:

1. REFER TO SHEETS CG001 AND CG002 FOR STORM SCHEDULES AND STRUCTURE DETAILS.
2. REFER TO CG702 FOR OVERALL DRAINAGE PLAN.
3. REFER TO C-501 FOR GENERAL EROSION CONTROL NOTES AND EROSION CONTROL AND GRADING FOR OFFSITE UTILITY TRENCHES NOTES.
4. REFER TO CG101 TO CG104 FOR EROSION CONTROL MEASURE KEY NOTES.
5. REFER TO SHEET C-012 AND C-013 FOR SPECIFIC EROSION AND SEDIMENT CONTROL MEASURES AND LEGEND.

REFER TO VOLUME 6 FOR BASE BID

SOUTH CAROLINA STATE PLANE

N

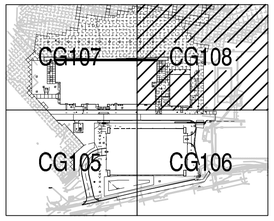

KEY PLAN

GRAPHIC SCALE

1" = 25' 0 25' 50' 75' 100'

STM	DESCRIPTION	DATE	APPR.
	MOD P00006 AND MOD P00007	10/2025	
	MOD P00005	05/2023	

NAVFAC

SOUTH CAROLINA No. 23067 01/13/23 BAMFORTH

SEAL

BAMFORTH ENGINEERS + SURVEYORS

A/E INFO

APPROVED:

FOR COMMANDER NAVFAC

ACTIVITY

Approved by J. Scott Roberts, Asset Management Branch Head & Supervisory Facility Planner, PWD Beaufort, SC via email.

SATISFACTORY TO DATE 12/15/2022

DES	CAB	DRW CAD	CHK ALB
PM/DM	KTB/RLH		
BRANCH MANAGER	DLB		
CHIEF ENG/ARCH	EJA		
FIRE PROTECTION	DSN		

DEPARTMENT OF THE NAVY
NAVAL FACILITIES ENGINEERING SYSTEMS COMMAND
DC CORE

NAVAL FACILITIES ENGINEERING SYSTEMS COMMAND - MID-ATLANTIC
NORFOLK, VA

MCAS BEAUFORT

BEAUFORT, SC

P-475 AIRCRAFT MAINTENANCE HANGAR - VOLUME 1 (BASE BID WITH OPTIONS)

STORM DRAINAGE PLAN

SCALE: GRAPHIC

EPROJECT NO.: 1363603

CONSTR. CONTR. NO.

NAVFAC DRAWING NO. 12859277

SHEET 105 OF 1412

CG108

DRAWFORM REVISION: 25 AUGUST 2020

FILE NAME: K:\jobs\20021\BJMSA 10-02-25\BJ06-P475-1363603-CG108.dwg LAYOUT NAME: CG108 PLOTTED: Thursday, November 06, 2025 - 2:24pm USER: mtw

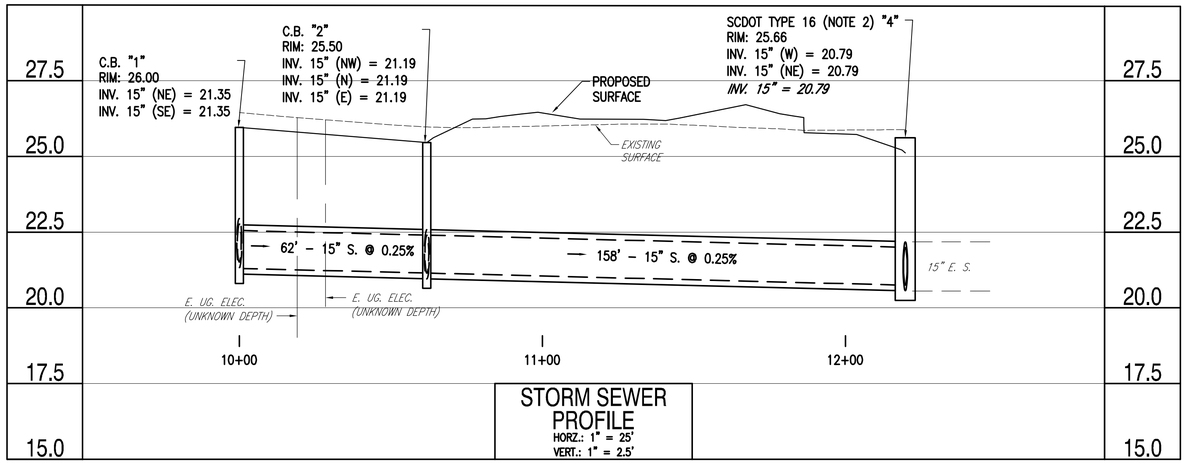

STORM SEWER PROFILE
HORZ.: 1" = 25'
VERT.: 1" = 2.5'

CG105, CG107

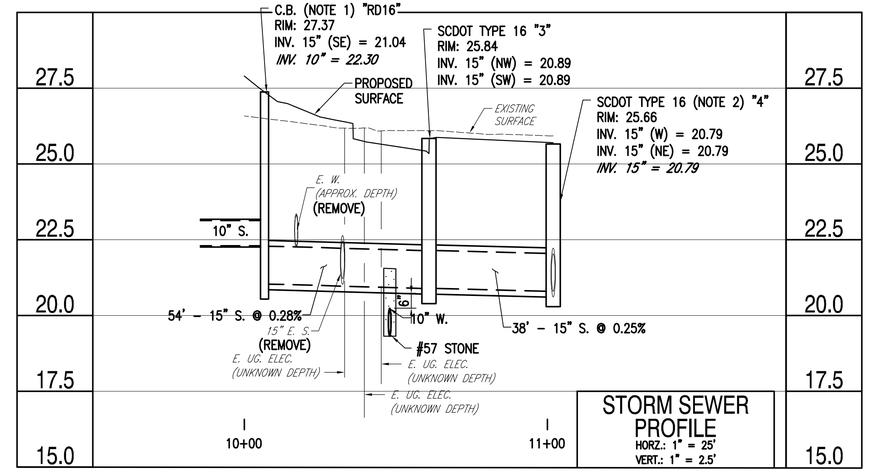

STORM SEWER PROFILE
HORZ.: 1" = 25'
VERT.: 1" = 2.5'

CG105, CG107

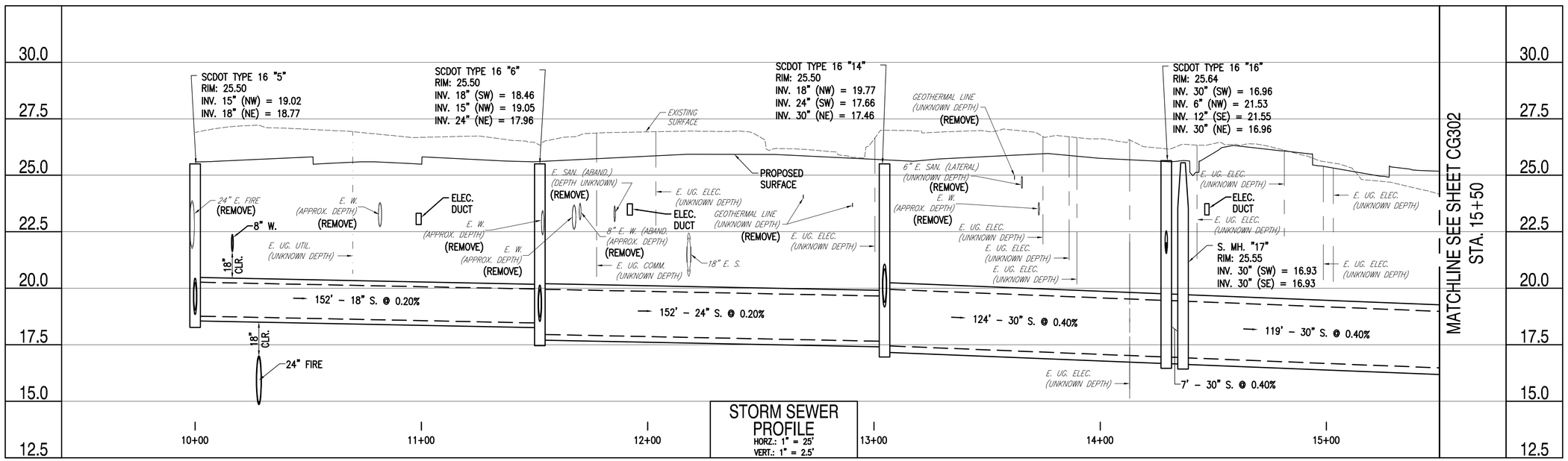

STORM SEWER PROFILE
HORZ.: 1" = 25'
VERT.: 1" = 2.5'

CG105, CG106

MATCHLINE SEE SHEET CG302
STA. 15+50

NOTES:

1. REFER TO SHEET CG002 FOR STORM STRUCTURE DATA NOTES.

GRAPHIC SCALE

HORZIONTAL 1" = 25' — 0 25 50' 75' 100'

VERTICAL 1" = 2.5' — 0 2.5' 5.0' 7.5' 10.0'

SYM	DESCRIPTION	DATE	APPR.
MOD	P00006 AND MOD P00007	10/2025	
MOD	P00005	05/2023	

NAVFAC

SOUTH CAROLINA PROFESSIONAL ENGINEER No. 23067 01/13/23 BAMFORTH

SEAL

BAMFORTH ENGINEERS + SURVEYORS

A/E INFO

APPROVED

FOR COMMANDER NAVFAC

ACTIVITY

Approved by J. Scott Roberts, Asset Management Branch Head & Supervisory Facility Planner, PWD Beaufort, SC via email.

SATISFACTORY TO DATE 12/15/2022

DES	CAB	DRW	CAD	CHK	ALB

PM/DM	KTB/RLH
BRANCH MANAGER	DLB
CHIEF ENGIARCH	EJA
FIRE PROTECTION	DSN

DEPARTMENT OF THE NAVY
NAVAL FACILITIES ENGINEERING SYSTEMS COMMAND
NAVAL FACILITIES ENGINEERING SYSTEMS COMMAND - MID-ATLANTIC
NORFOLK, VA
DC CODE
MCAS BEAUFORT
BEAUFORT, SC

P-475 AIRCRAFT MAINTENANCE HANGAR - VOLUME 1 (BASE BID WITH OPTIONS)

STORM SEWER PROFILES

SCALE: GRAPHIC
EPROJECT NO.: 1363603
CONSTR. CONTR. NO.
NAVFAC DRAWING NO. 12859278
SHEET 106 OF 1412

CG301

DRAWFORM REVISION: 25 AUGUST 2020

FILE NAME: K:\jobs\20021\BAMSA 10-02-25\BLDG-P475-1363603-CG301.dwg LAYOUT NAME: CG301 PLOTTED: Thursday, November 06, 2025 - 5:22pm USER: mtw

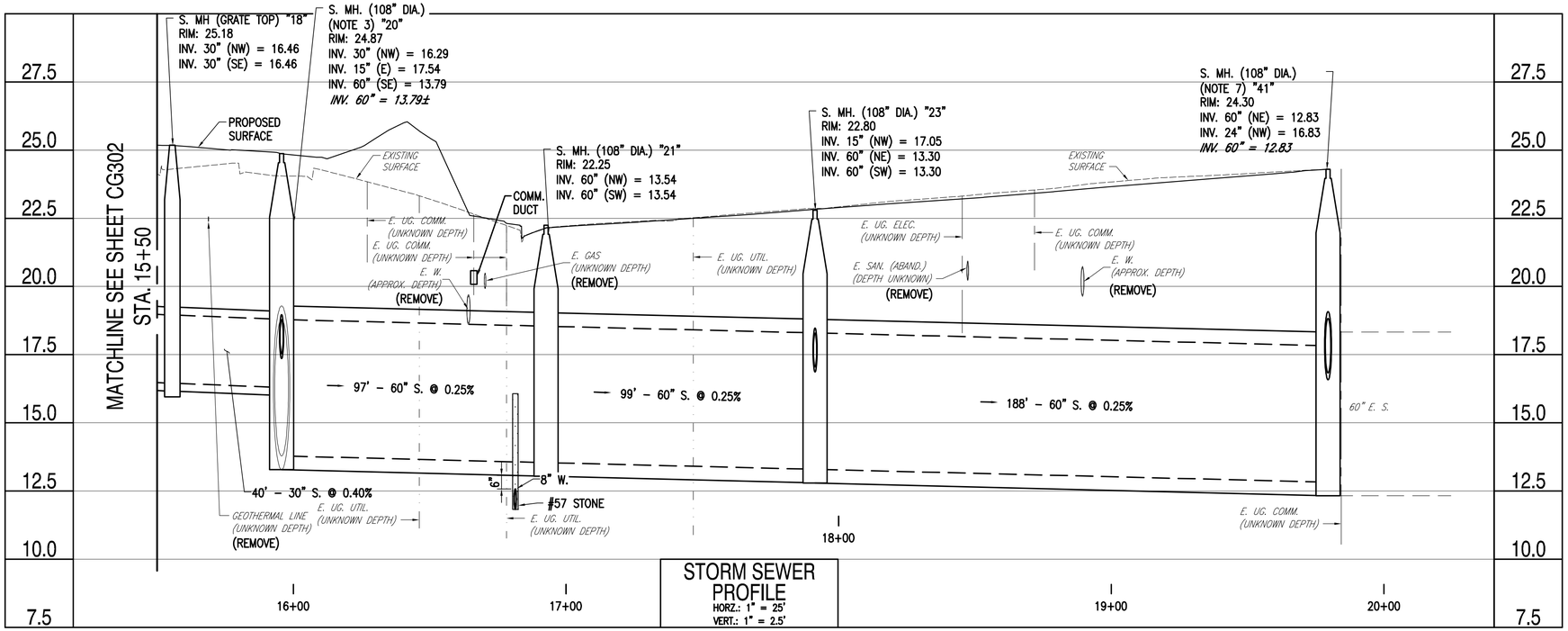

STORM SEWER PROFILE

HORZ.: 1" = 25'
VERT.: 1" = 2.5'

CG105, CG106

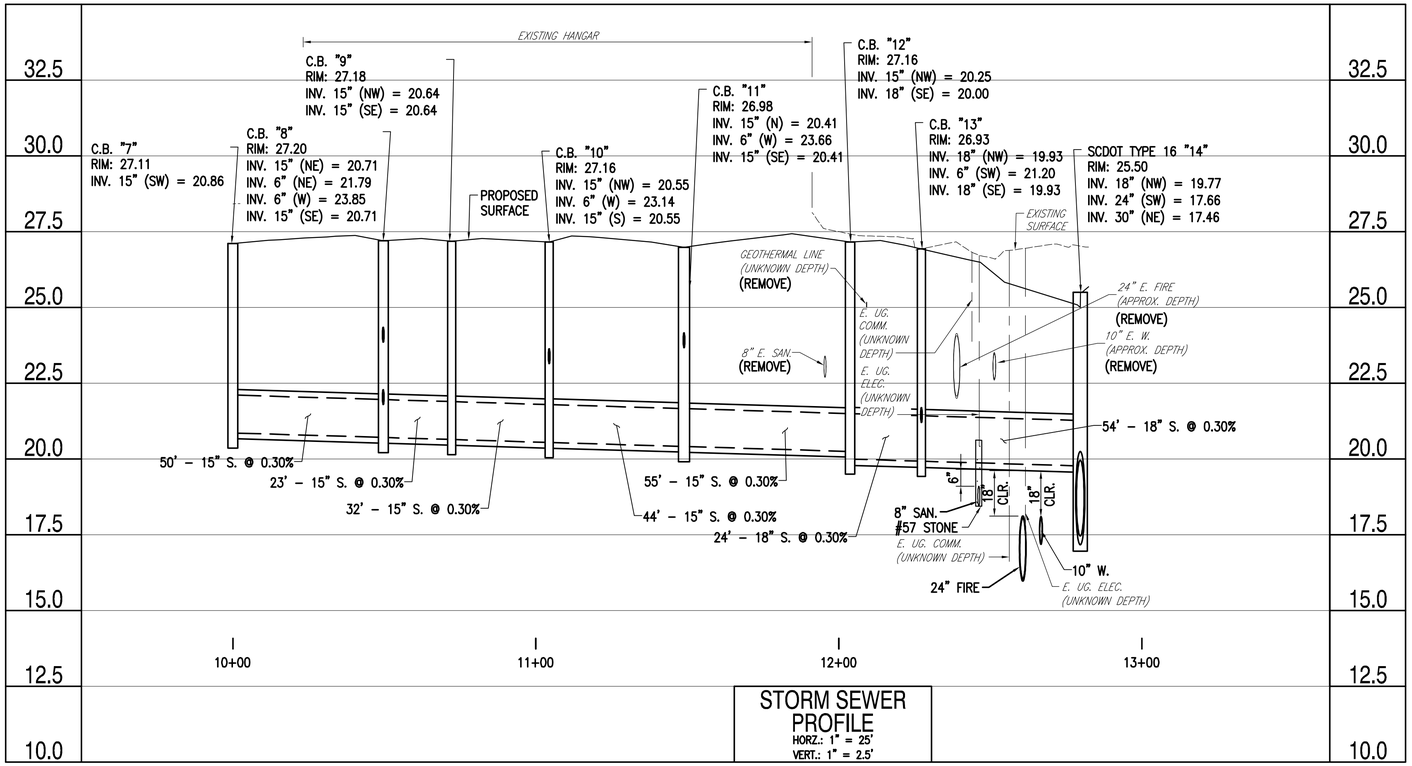

STORM SEWER PROFILE

HORZ.: 1" = 25'
VERT.: 1" = 2.5'

CG106, CG108

NOTES:

1. REFER TO SHEET CG002 FOR STORM STRUCTURE DATA NOTES.

GRAPHIC SCALE

HORZIONTAL 1" = 25' — 0 25 50' 75' 100'

VERTICAL 1" = 2.5' — 0 2.5' 5.0' 7.5' 10.0'

STM	DESCRIPTION	DATE	APPR.
	MOD P00006 AND MOD P00007	10/2025	
	MOD P00005	05/2023	

NAVFAC

SOUTH CAROLINA LICENSED PROFESSIONAL ENGINEER No. 23067 01/13/23 ANTHONY T. BAMFORTH

SEAL

BAMFORTH ENGINEERS + SURVEYORS

A/E INFO

APPROVED

FOR COMMANDER NAVFAC

ACTIVITY

Approved by J. Scott Roberts, Asset Management Branch Head & Supervisory Facility Planner, PWD Beaufort, SC via email.

SATISFACTORY TO DATE 12/15/2022

DES	CAB	DRW CAD	CHK ALB
PM/DM	KTB/RLH		
BRANCH MANAGER	DLB		
CHIEF ENG/ARCH	EJA		
FIRE PROTECTION	DSN		

DEPARTMENT OF THE NAVY
NAVAL FACILITIES ENGINEERING SYSTEMS COMMAND
NAVAL FACILITIES ENGINEERING SYSTEMS COMMAND - MID-ATLANTIC
NORFOLK, VA
DC CORE
MCAS BEAUFORT
BEAUFORT, SC

P-475 AIRCRAFT MAINTENANCE HANGAR - VOLUME 1 (BASE BID WITH OPTIONS)

STORM SEWER PROFILES

SCALE: GRAPHIC
EPROJECT NO.: 1363603
CONSTR. CONTR. NO.
NAVFAC DRAWING NO. 12859279
SHEET 107 OF 1412

CG302

DRAWFORM REVISION: 25 AUGUST 2020

FILE NAME: K:\Jobs\20021\BMSA 10-02-25\BLDG-P475-1363603-CG302.dwg LAYOUT NAME: CG302 PLOTTED: Thursday, November 06, 2025 - 5:21pm USER: mtw

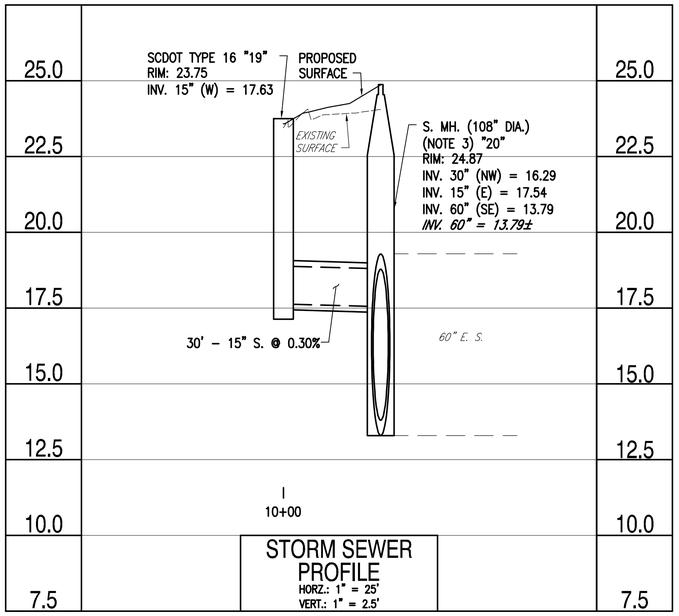

STORM SEWER PROFILE
HORZ.: 1" = 25'
VERT.: 1" = 2.5'

CG106

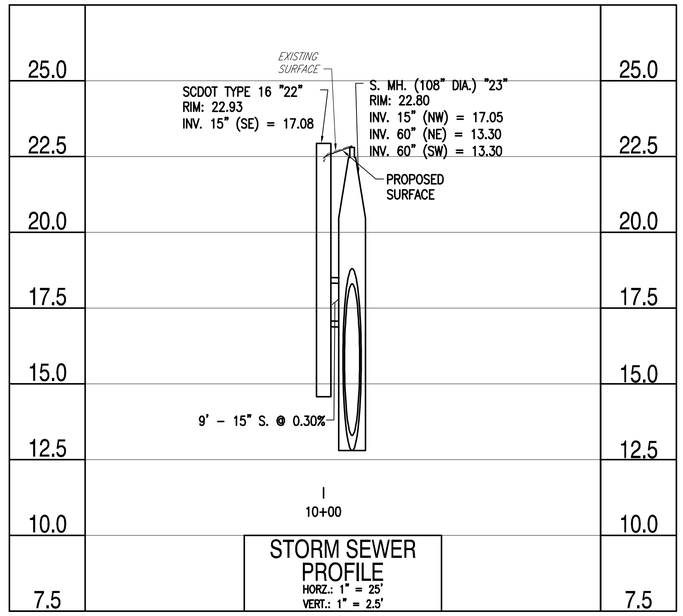

STORM SEWER PROFILE
HORZ.: 1" = 25'
VERT.: 1" = 2.5'

CG106

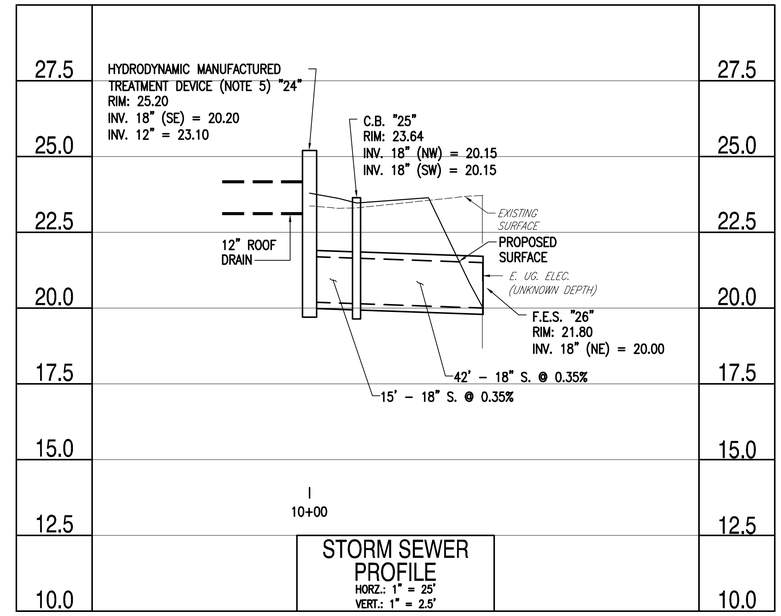

STORM SEWER PROFILE
HORZ.: 1" = 25'
VERT.: 1" = 2.5'

CG106

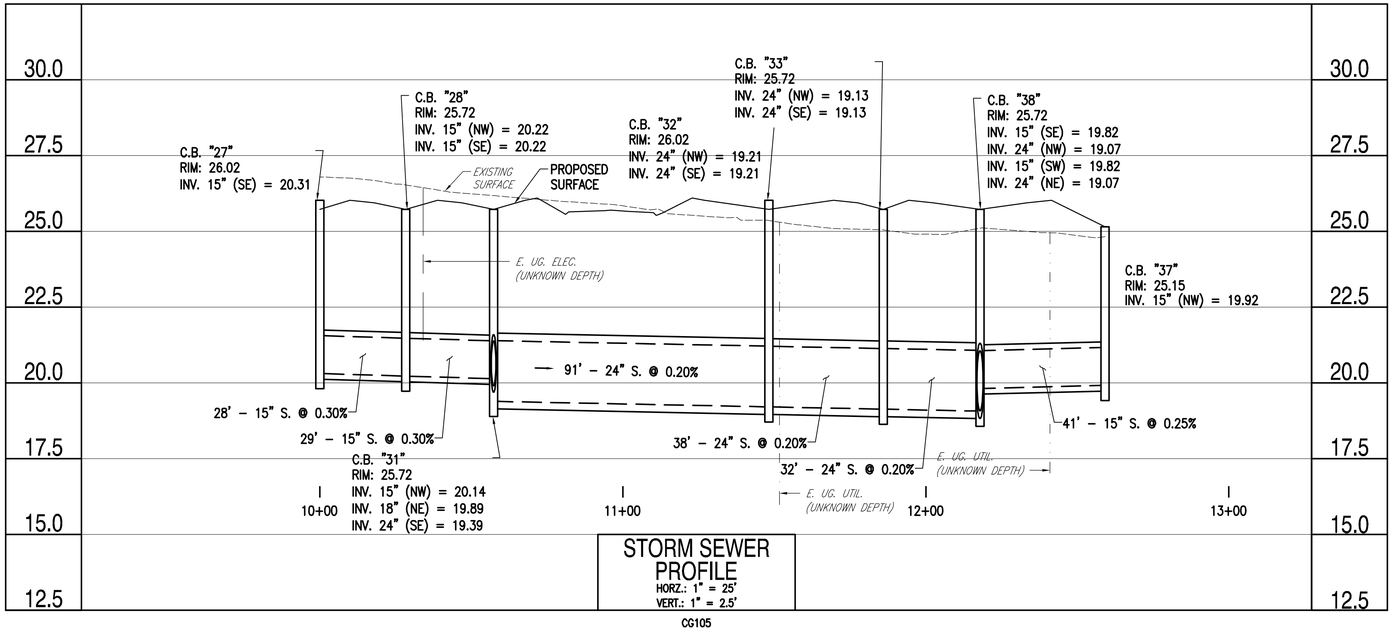

STORM SEWER PROFILE
HORZ.: 1" = 25'
VERT.: 1" = 2.5'

CG105

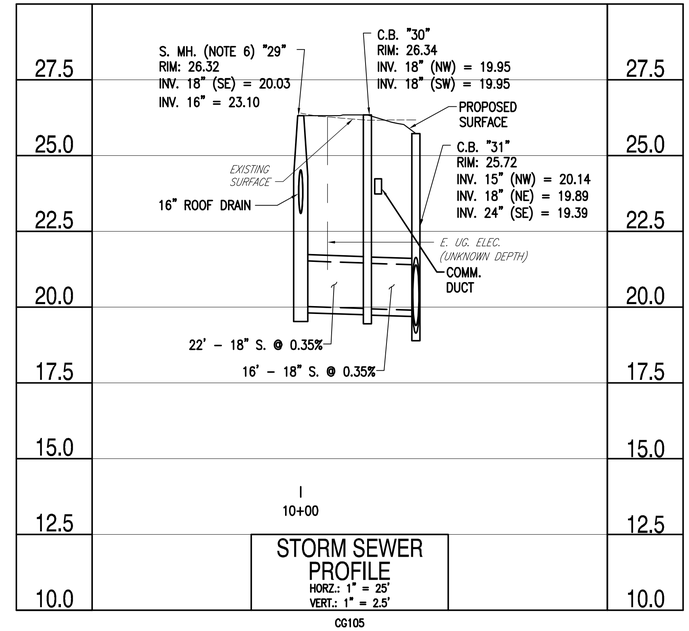

STORM SEWER PROFILE
HORZ.: 1" = 25'
VERT.: 1" = 2.5'

CG105

NOTES:

1. REFER TO SHEET CG002 FOR STORM STRUCTURE DATA NOTES.

GRAPHIC SCALE

HORZIONTAL 1" = 25' — 0 25 50' 75' 100'

VERTICAL 1" = 2.5' — 0 2.5' 5.0' 7.5' 10.0'

SYM	DESCRIPTION	DATE	APPR.
MOD P00006 AND MOD P00007		10/2025	
MOD P00005		05/2023	

NAVFAC

SOUTH CAROLINA PROFESSIONAL ENGINEER No. 23067 01/13/23 BAMFORTH

SEAL

BAMFORTH ENGINEERS + SURVEYORS

A/E INFO

APPROVED

FOR COMMANDER NAVFAC

ACTIVITY

Approved by J. Scott Roberts, Asset Management Branch Head & Supervisory Facility Planner, PWD Beaufort, SC via email.

SATISFACTORY TO DATE 12/15/2022

DES	CAB	DRW	CAD	CHK	ALB
PM/DM	KTB/RLH				
BRANCH MANAGER	DLB				
CHIEF ENG/ARCH	EJA				
FIRE PROTECTION	DSN				

DEPARTMENT OF THE NAVY
NAVAL FACILITIES ENGINEERING SYSTEMS COMMAND
DC CORE
NAVAL FACILITIES ENGINEERING SYSTEMS COMMAND - MID-ATLANTIC
NORFOLK, VA
MCAS BEAUFORT
BEAUFORT, SC

P-475 AIRCRAFT MAINTENANCE HANGAR - VOLUME 1 (BASE BID WITH OPTIONS)

STORM SEWER PROFILES

SCALE: GRAPHIC

EPROJECT NO.: 1363603

CONSTR. CONTR. NO.

NAVFAC DRAWING NO. 12859280

SHEET 108 OF 1412

CG303

DRAWFORM REVISION: 25 AUGUST 2020

FILE NAME: K:\jobs\20021\BURSA 10-02-25\BLDG-P475-1363603-CG303.dwg LAYOUT NAME: CG303 PLOTTED: Thursday, November 06, 2025 - 5:19pm USER: mlw

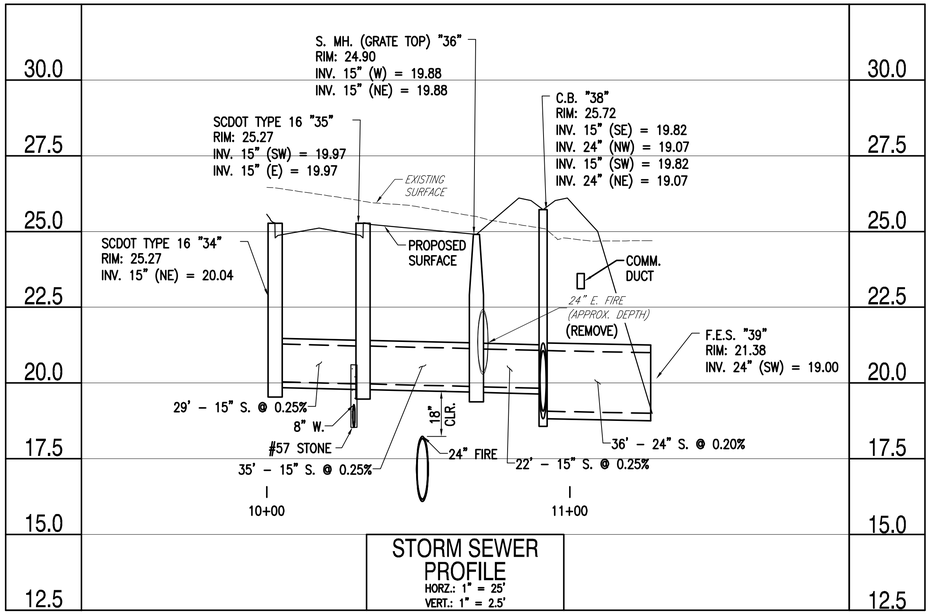

STORM SEWER PROFILE
HORZ.: 1" = 25'
VERT.: 1" = 2.5'

CG105

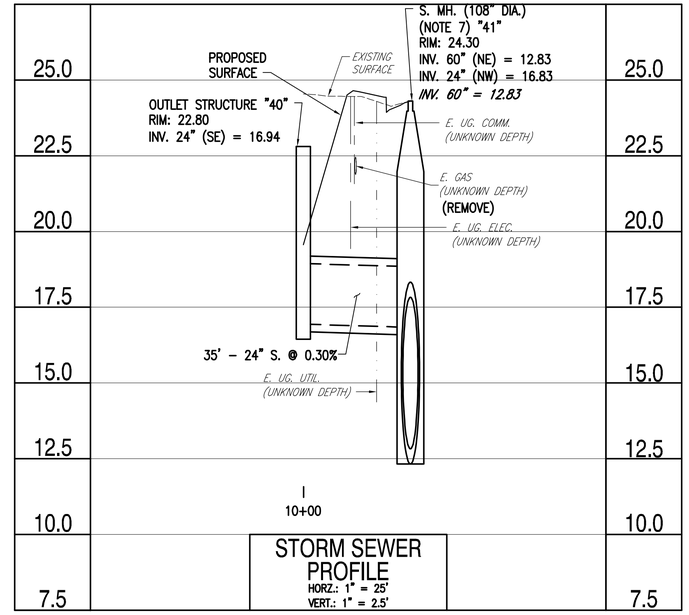

STORM SEWER PROFILE
HORZ.: 1" = 25'
VERT.: 1" = 2.5'

CG105

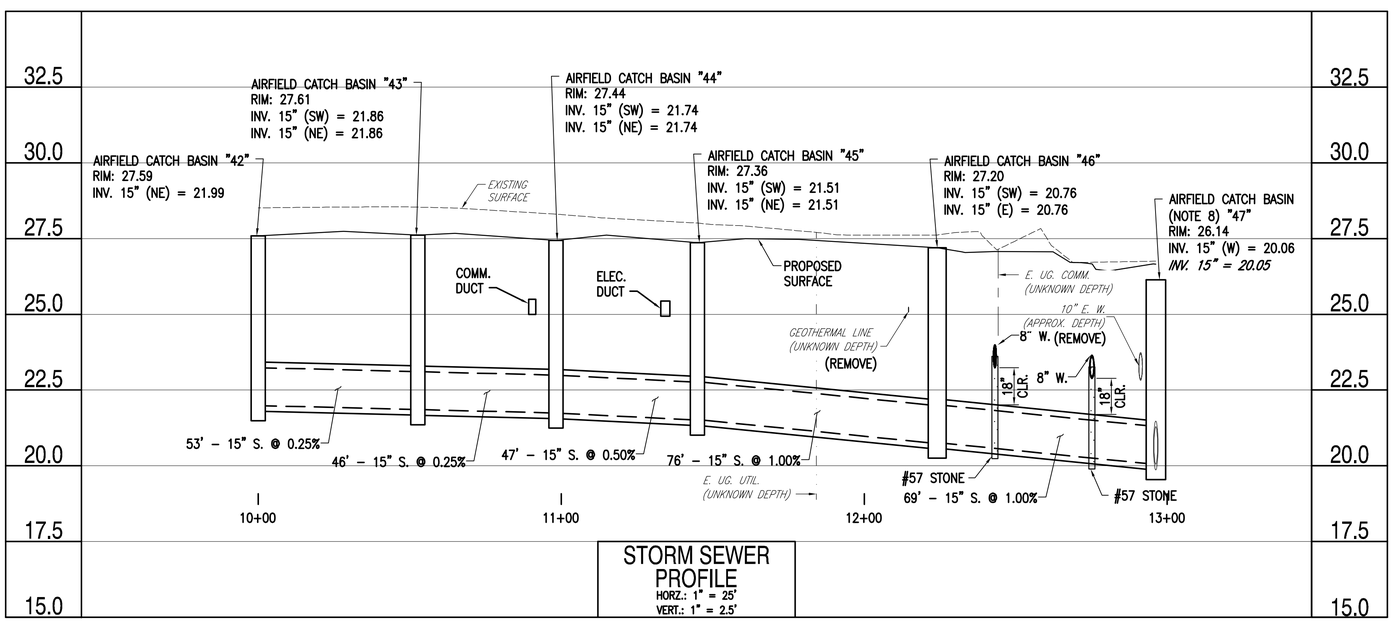

STORM SEWER PROFILE
HORZ.: 1" = 25'
VERT.: 1" = 2.5'

CG106

NOTES:

1. REFER TO SHEET CG002 FOR STORM STRUCTURE DATA NOTES.

GRAPHIC SCALE

HORZIONTAL 1" = 25' — 0 25 50' 75' 100'

VERTICAL 1" = 2.5' — 0 2.5' 5.0' 7.5' 10.0'

SYM	DESCRIPTION	DATE	APPR.
	MOD P00006 AND MOD P00007	10/2025	
	MOD P00005	05/2023	

NAVFAC

SOUTH CAROLINA PROFESSIONAL ENGINEER No. 23067 01/13/23 BAMFORTH

SEAL

BAMFORTH ENGINEERS + SURVEYORS

A/E INFO

APPROVED:

FOR COMMANDER NAVFAC

ACTIVITY

Approved by J. Scott Roberts, Asset Management Branch Head & Supervisory Facility Planner, PWD Beaufort, SC via email.

SATISFACTORY TO DATE 12/15/2022

DES CAB | DRW CAD | CHK ALB

PM/DM KTB/RLH

BRANCH MANAGER DLB

CHIEF ENG/ARCH EJA

FIRE PROTECTION DSN

DEPARTMENT OF THE NAVY
NAVAL FACILITIES ENGINEERING SYSTEMS COMMAND
NAVAL FACILITIES ENGINEERING SYSTEMS COMMAND - MID-ATLANTIC
NORFOLK, VA
DC CORE
MCAS BEAUFORT
BEAUFORT, SC

P-475 AIRCRAFT MAINTENANCE HANGAR - VOLUME 1 (BASE BID WITH OPTIONS)

STORM SEWER PROFILES

SCALE: GRAPHIC

EPROJECT NO.: 1363603

CONSTR. CONTR. NO.

NAVFAC DRAWING NO. 12859281

SHEET 109 OF 1412

CG304

DRAWFORM REVISION: 25 AUGUST 2020

FILE NAME: K:\jobs\20021\BUMSA 10-02-25\BL06-P475-1363603-CG304.dwg LAYOUT NAME: CG304 PLOTTED: Thursday, November 06, 2025 - 5:18pm USER: mtw

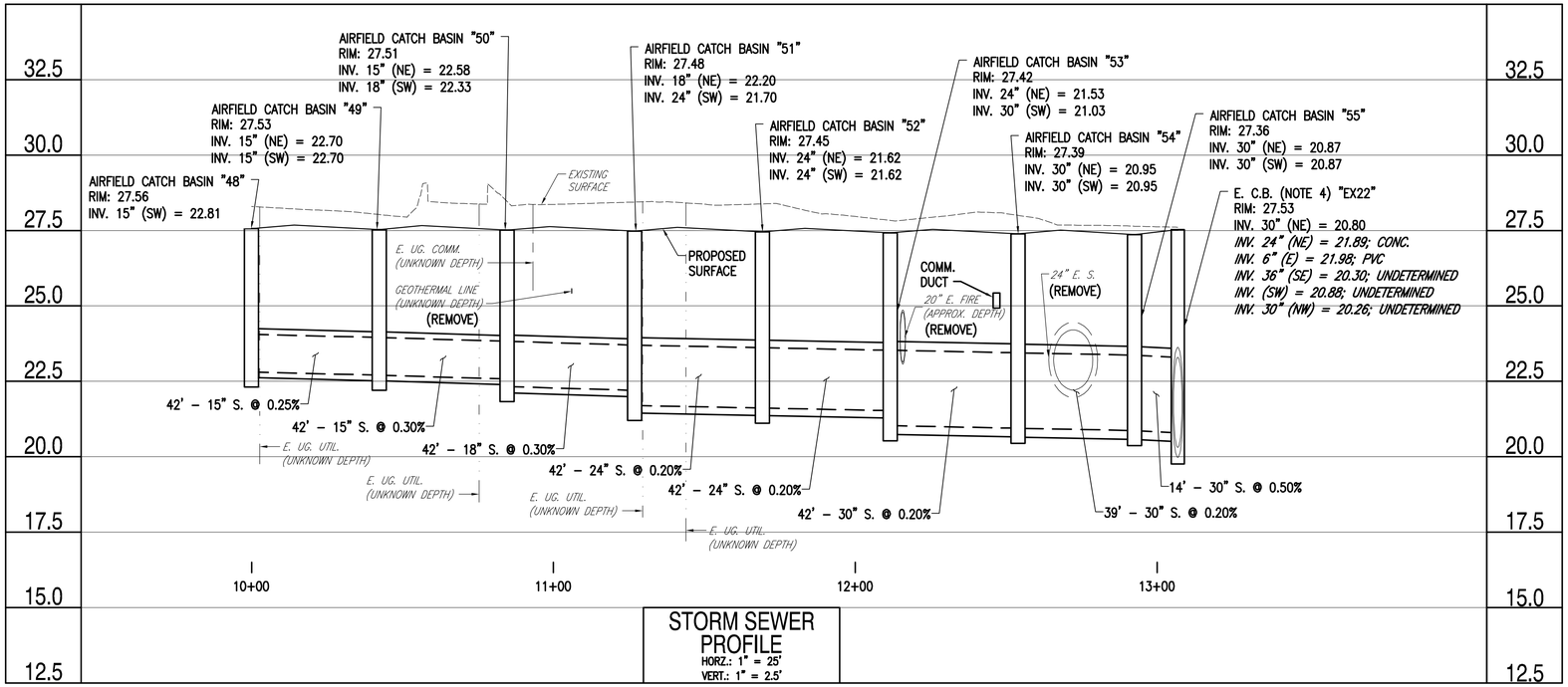

STORM SEWER PROFILE
HORZ.: 1" = 25'
VERT.: 1" = 2.5'

CG107

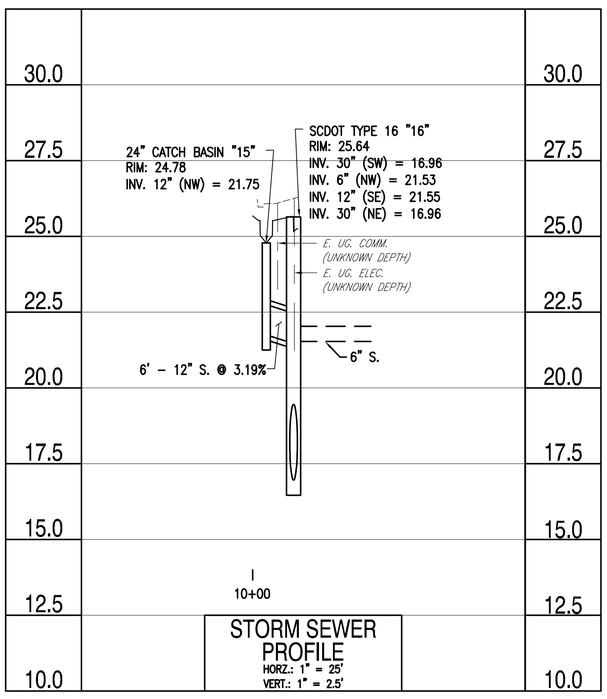

STORM SEWER PROFILE
HORZ.: 1" = 25'
VERT.: 1" = 2.5'

CG106

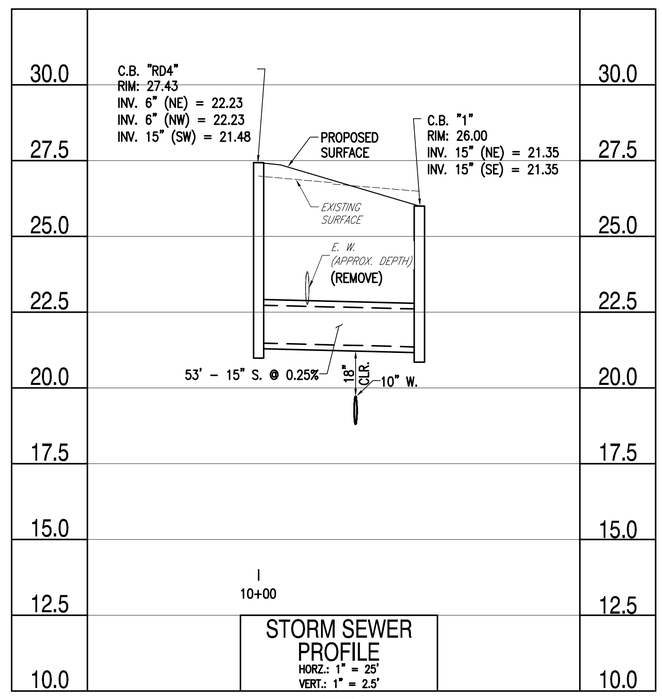

STORM SEWER PROFILE
HORZ.: 1" = 25'
VERT.: 1" = 2.5'

CG107

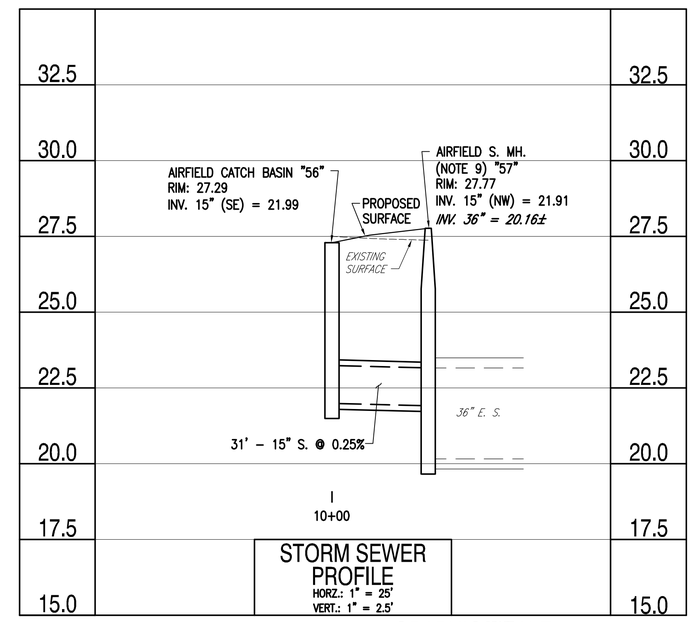

STORM SEWER PROFILE
HORZ.: 1" = 25'
VERT.: 1" = 2.5'

CG107

NOTES:

1. REFER TO SHEET CG002 FOR STORM STRUCTURE DATA NOTES.

GRAPHIC SCALE

HORZIONTAL 1" = 25' — 0, 25, 50', 75', 100'

VERTICAL 1" = 2.5' — 0, 2.5', 5.0', 7.5', 10.0'

APPR.	DATE	SYM	DESCRIPTION
	10/2025		MOD P00006 AND MOD P00007
	05/2023		MOD P00005

NAVFAC

SOUTH CAROLINA PROFESSIONAL ENGINEER No. 23067 01/13/23 JAMES T. BAMFORTH

SEAL

BAMFORTH ENGINEERS + SURVEYORS

A/E INFO

APPROVED

FOR COMMANDER NAVFAC

ACTIVITY

Approved by J. Scott Roberts, Asset Management Branch Head & Supervisory Facility Planner, PWD Beaufort, SC via email.

SATISFACTORY TO DATE 12/15/2022

DES	CAB	DRW CAD	CHK ALB
PM/DM	KTB/RLH		
BRANCH MANAGER	DLB		
CHIEF ENG/ARCH	EJA		
FIRE PROTECTION	DSN		

DEPARTMENT OF THE NAVY
NAVAL FACILITIES ENGINEERING SYSTEMS COMMAND
NAVAL FACILITIES ENGINEERING SYSTEMS COMMAND - MID-ATLANTIC
NORFOLK, VA

DC CORE
MCAS BEAUFORT

BEAUFORT, SC

P-475 AIRCRAFT MAINTENANCE HANGAR - VOLUME 1 (BASE BID WITH OPTIONS)

STORM SEWER PROFILES

SCALE: GRAPHIC

EPROJECT NO.: 1363603

CONSTR. CONTR. NO.

NAVFAC DRAWING NO. 12859282

SHEET 110 OF 1412

CG305

DRAWFORM REVISION: 25 AUGUST 2020

FILE NAME: K:\Jobs\20021\BMSA 10-02-25\BLDG-P475-1363603-CG305.dwg LAYOUT NAME: CG305 PLOTTED: Thursday, November 06, 2025 - 5:18pm USER: mtw

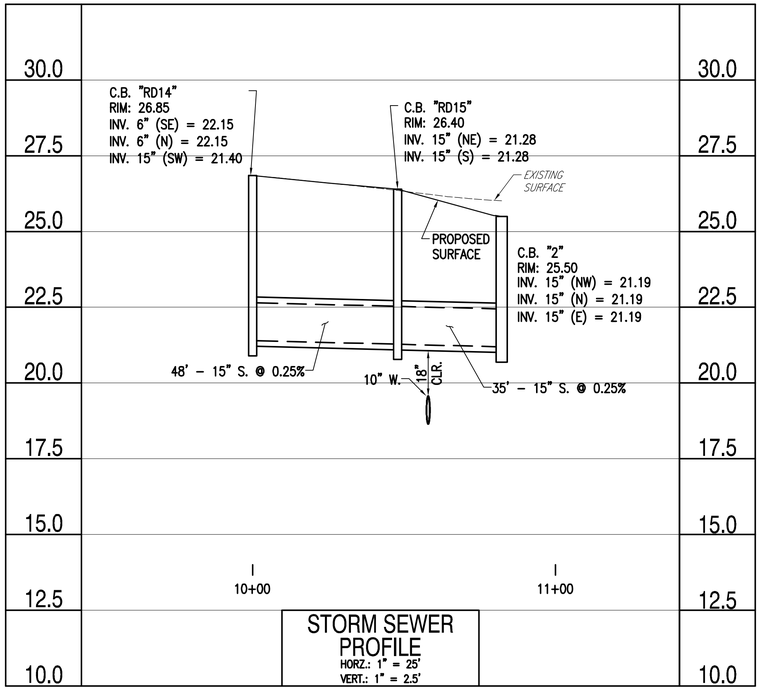

STORM SEWER PROFILE
HORZ.: 1" = 25'
VERT.: 1" = 2.5'

CG107

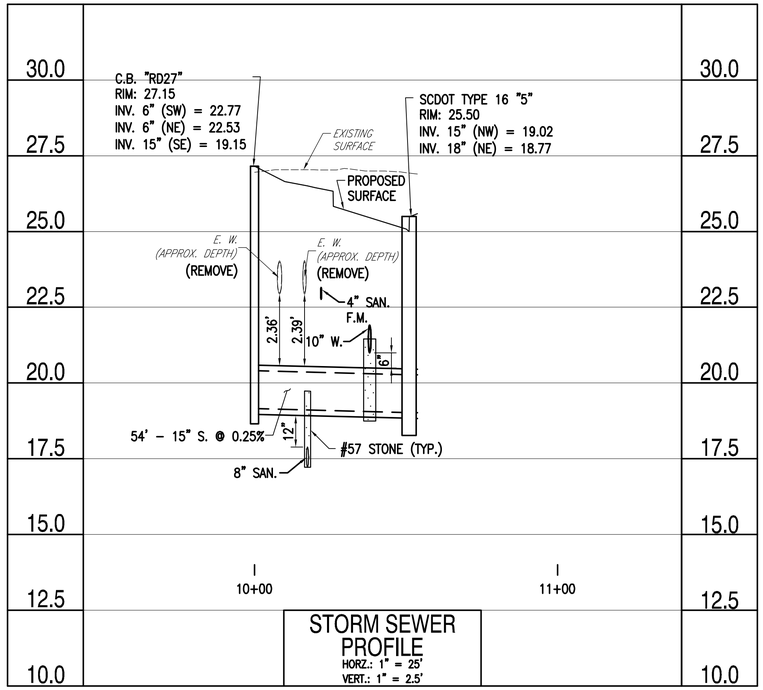

STORM SEWER PROFILE
HORZ.: 1" = 25'
VERT.: 1" = 2.5'

CG107

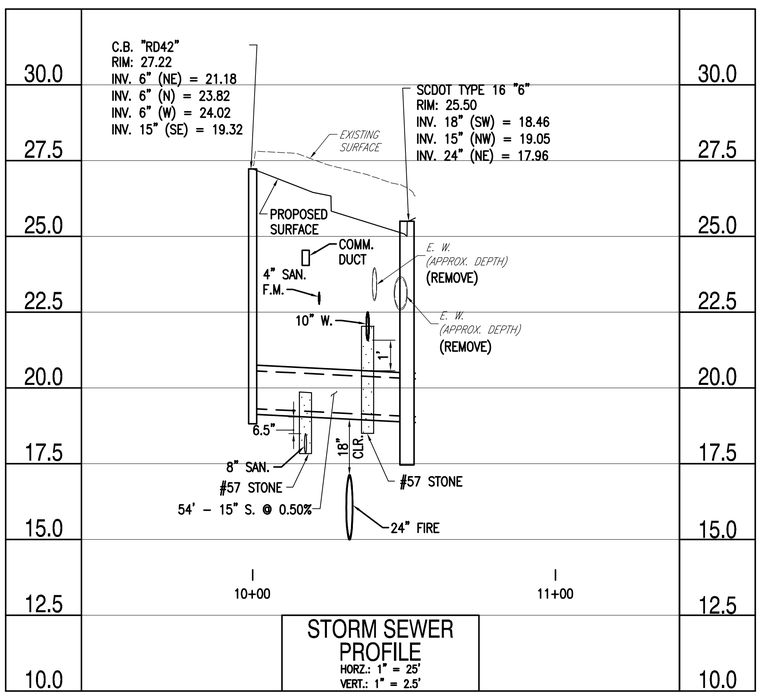

STORM SEWER PROFILE
HORZ.: 1" = 25'
VERT.: 1" = 2.5'

CG107

NOTES:

1. REFER TO SHEET CG002 FOR NOTES.

GRAPHIC SCALE

HORZIONTAL 1" = 25' — 0, 25, 50', 75', 100'

VERTICAL 1" = 2.5' — 0, 2.5', 5.0', 7.5', 10.0'

SYM.	DESCRIPTION	DATE	APPR.
	MOD P00006 AND MOD P00007	10/2025	
	MOD P00005	05/2023	

NAVFAC

SOUTH CAROLINA PROFESSIONAL ENGINEER No. 23067 01/13/23 BAMFORTH

SEAL

BAMFORTH ENGINEERS + SURVEYORS

A/E INFO

APPROVED

FOR COMMANDER NAVFAC

ACTIVITY

Approved by J. Scott Roberts, Asset Management Branch Head & Supervisory Facility Planner, PWD Beaufort, SC via email.

SATISFACTORY TO DATE 12/15/2022

DES	CAB	DRW	CAD	CHK	ALB

PM/DM	KTB/RLH
BRANCH MANAGER	DLB
CHIEF ENG/ARCH	EJA
FIRE PROTECTION	DSN

DEPARTMENT OF THE NAVY
NAVAL FACILITIES ENGINEERING SYSTEMS COMMAND
NAVAL FACILITIES ENGINEERING SYSTEMS COMMAND - MID-ATLANTIC
NORFOLK, VA
DC CORE
MCAS BEAUFORT

BEAUFORT, SC

P-475 AIRCRAFT MAINTENANCE HANGAR - VOLUME 1 (BASE BID WITH OPTIONS)

STORM SEWER PROFILES

SCALE: GRAPHIC

EPROJECT NO.: 1363603

CONSTR. CONTR. NO.

NAVFAC DRAWING NO. 12859283

SHEET 111 OF 1412

CG306

DRAWFORM REVISION: 25 AUGUST 2020

FILE NAME: K:\Jobs\20021\BMSA 10-02-25\BLDG-P475-1363603-CG306.dwg LAYOUT NAME: CG306 PLOTTED: Thursday, November 06, 2025 - 5:16pm USER: mtw