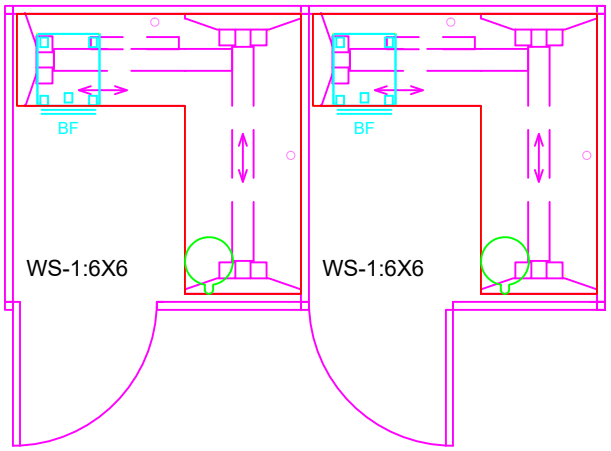

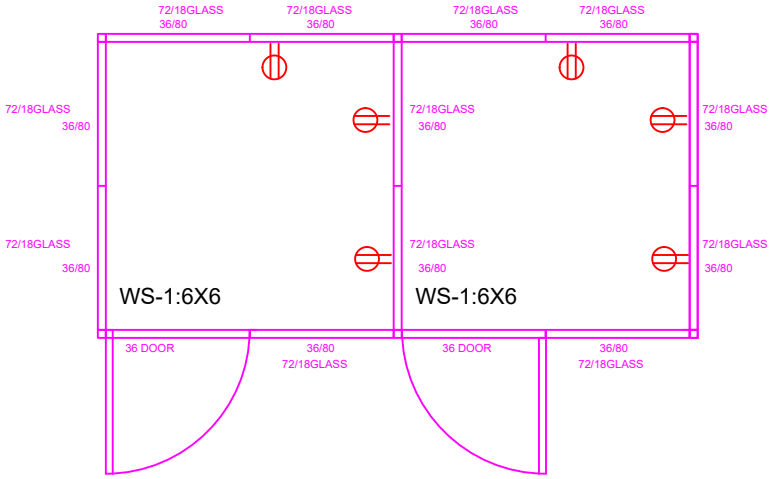

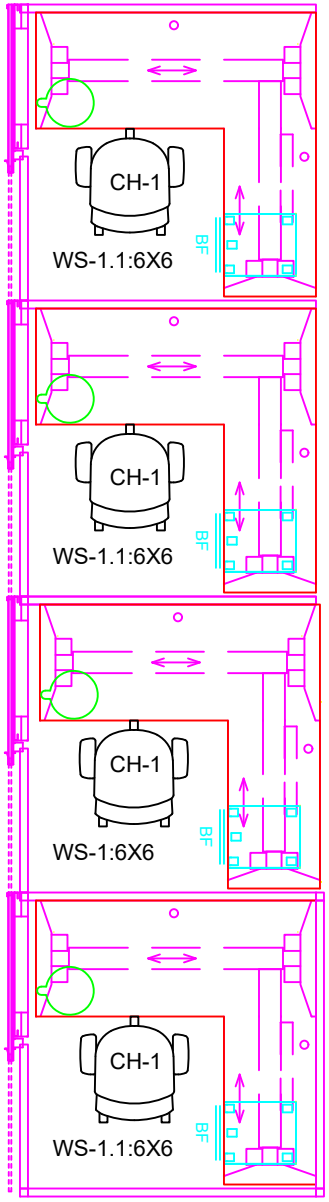

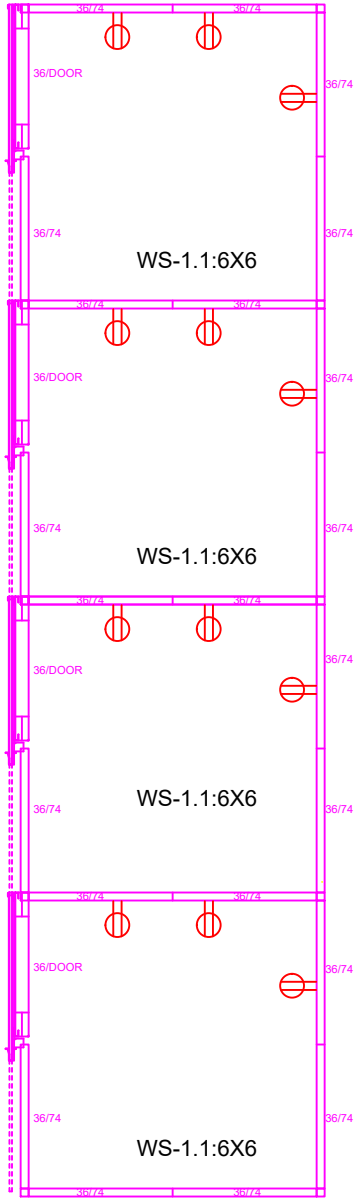

CHIEF-ENG. CONST.			CHIEF-ENG. SECTION			COORDINATOR		
DATE	NO	REVISION	BY	DATE	NO	REVISION	BY	
xx/xx/xx	xx	xx						

WPAFB

WRIGHT-PATTERSON AIR FORCE BASE

F20553 FURNITURE

PROJECT NO. 2025SH172

PANEL PLAN. 1

DESIGNED	DRAWN	CHECKED	DATE
SDH	SDH	xxx	03/18/2026

ID-4