ANNUAL MAINTENANCE EXAMINATION

Systems shall be maintained at regular intervals, not more than one year apart, or when specifically indicated by an inspection. **Exception:** Tank pressure and agent quantity shall be checked every six months per NFPA 2001.

Maintenance is a "thorough check" of the system. It is intended to give maximum assurance that a system will operate effectively and safely. It includes a thorough examination and any necessary repair, recharge, or replacement. It will reveal if there is a need for hydrostatic testing of the tank. The procedures listed in this section are the minimum that are necessary to maintain a system. If circumstances warrant them, a more thorough procedure should be followed to assure system performance. Make certain that all people affected by the maintenance are informed before you start. This may include the owner, security personnel, the local Fire Department, and possibly local workers that may be affected by equipment shutdown or start up.

NOTICE

If the system includes an ANSUL AUTOMAN II-C releasing device, before proceeding with annual maintenance examination, insert lock pin in ANSUL AUTOMAN II-C release and remove nitrogen cartridge. Install safety shipping cap on cartridge.

1. Survey the hazard to make certain it has not changed from what the system was designed to protect. While surveying the hazard, look for different fuels, loss of hazard integrity, new hazards, etc.
2. Check all nozzles to make certain they are in place. Check the condition of the nozzle for corrosion or damage and make certain it is not obstructed internally or externally.
3. Check the condition of the piping to make certain that it is properly secured in the hangers and that all fittings are connected tightly.
4. Check all warning nameplates (signs) throughout the area. Make certain they are in place, mounted securely, readable, and are not damaged.
5. Check all tank bracketing. Make certain all tanks are secured in the brackets. Check for corrosion, damage, or missing components.
6. Check the condition of all tanks. Look for signs of damage or corrosion, and check the tank's last hydro date. (NFPA 2001 states "Cylinders continuously in service without discharging shall be given a complete external visual inspection every five years or more frequently if required. The visual inspection shall be in accordance with Compressed Gas Association Pamphlet C-6, Section 3; except that the cylinders need not be emptied or stamped while under pressure.") Refer to NFPA 2001, Chapter 4 Inspection, Maintenance, Testing, and Training, for hydro requirements.
7. Check condition of all tank discharge hoses. Look for signs of structural problems like abrasions or weather checking. Make certain all hoses are connected properly. All hoses must be tested every 5 years. Refer to NFPA 2001, Chapter 4 Inspection, Maintenance, Testing, and Training, for detailed testing requirements.
8. Check condition of all actuators by completing the following:
   - Remove all actuators from the tank valves (electric, manual, and pneumatic) and leave them off until the final step in Maintenance Section.
   - For pneumatic actuators, check the condition of each actuator to make certain they operate freely. When finished, reset the pin in the up position. **Do not install on tank valves.**
   - For electric actuators, make certain all wires are properly connected. **Do not install on tank valves.**

NOTICE

Before proceeding with Step No. 9, make certain all electric actuators have been removed from all valves and that the nitrogen cartridge has been removed from the ANSUL AUTOMAN II-C release and that the locking pin in the release mechanism has also been removed.

Maintenance

ANNUAL MAINTENANCE EXAMINATION (Continued)

9. Tank Weighing – Option 1

Tanks must be weighed (without liquid level indicator) to determine agent quantity. The weighing procedure is as follows:

- Remove all manual controls, actuators and actuation pipe or tubing and flexible electrical connectors.
- Disconnect and remove discharge piping/discharge hoses from tank valves.
- Install Safety Outlet Caps onto tank valves.
- Remove tanks from bracketing and weigh tanks. Any tank showing more than the maximum allowable weight loss must be recharged by a qualified recharge agent.
- Record weight of tank on record tag.
- Replace tanks in bracketing and remove Safety Outlet Caps.
- Reconnect discharge piping/discharge hoses and all control heads, pressure actuators, pressure actuation pipe or tubing and flexible electric connectors.

9a. Tank Weighing – Option 2

Determine agent quantity using liquid level indicator. The liquid level indicator is used to determine the liquid level in 280, 390, 450 and 850 lb. tanks. During a maintenance examination, the indicator will enable a service representative to convert a linear measurement to agent weight in order to determine if the tank has any weight loss. This measurement is accomplished without removing the tank from the fire suppression system.

To measure the liquid agent level:

a. Remove the protective cap from the measuring device housing.

b. Lift the measuring tape to the end (or approximately 3 in. above the expected level). Slowly lower the tape until a magnetic interlock is felt. See Figure 1.

Replace hose every 5 Years
SS Braided hose Also

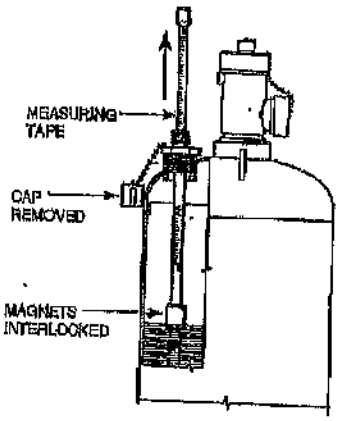

FIGURE 1

c. Read the measurement on the tape directly at the top of the plastic sleeve in the measuring device housing (see Figure 2). Record this measurement and note the temperature of the tank module.

NOTICE

The tank module temperature can be determined by measuring the ambient temperature at the tank location. The tank must be stored at this temperature for at least 24 hours to obtain an accurate liquid level reading.

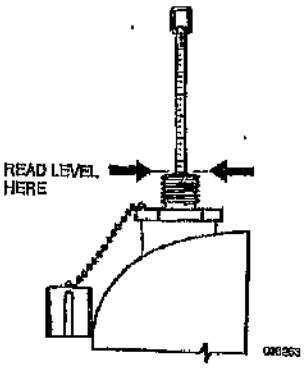

FIGURE 2

d. To reinstall tape, quickly pull on the tape to disengage the magnetic interlock. Then slide the tape into the housing and replace the protective cap.

Maintenance

ANNUAL MAINTENANCE EXAMINATION (Continued)

e. Using the Agent Quantity Table(s) located in this section, determine the weight of charge as follows:

- Find the liquid level reading along the left hand vertical line of the table.
- From that point, follow the horizontal line to the point where it intersects with the temperature column (using the tank temperature noted in Step c).
- Read the weight of Novec 1230 agent at the level/temperature column intersection.

f. Compare the weight from the table to the weight of charge stamped on the tank nameplate. If the measurement shows a net weight loss of more than 5%, the tank must be weighed to verify the liquid level measurement. If the weight loss still exceeds 5% of the weight of charge, the tank requires recharging.

10. Check condition of control panel for tampering, corrosion, or damage. Test panel at this point by referring to the appropriate AUTOPULSE Control System manual. Note: If system includes an ANSUL AUTOMAN II-C release, make certain cartridge is removed, release is cocked, and locking pin is not in place before each test.

11. Check all detectors. Make certain they are in place, clean, and not damaged. If required, check the sensitivity of each per the instructions of the detector manufacturer. See appropriate AUTOPULSE Control System manual for detailed instructions.

12. Check all pull stations. Make certain they are in place, that they are not blocked or damaged. Operate each pull station to make certain that they operate the control panel. Reset each pull station.

13. While checking the detectors and electric pull stations, inspect each alarm device. Check the alarm's condition and verify that they operate properly when energized. Reset the alarm circuit after each test.

14. If the system includes an ANSUL AUTOMAN, check release by completing the following:

- Make certain locking pin is not in place, and manually test release by operating the "STRIKE" button on the release mechanism.
- Cock ANSUL AUTOMAN II-C release using cocking lever, Part No. 26310, and install locking pin.
- Remove gasket from cartridge receiver in ANSUL AUTOMAN II-C release mechanism. Check gasket for elasticity or cuts and replace if necessary. Clean and coat gasket lightly with a good grade of extreme temperature grease such as Dow Corning No. 4. Reinstall gasket into cartridge receiver. **Do not install cartridge at this time.**

15. When all tests are complete, reset control panel and all accessory electrical equipment.

16. Make certain all electric and pneumatic actuators are reset.

17. Install all electric and pneumatic actuators on tank valves. Hand tighten.

18. Install nitrogen cartridge in ANSUL AUTOMAN II-C release by completing the following:

- Make certain release mechanism is cocked and locking bar is in place.
- Remove shipping cap and weigh nitrogen cartridge. Replace if weight is 1/2 oz. (14.2 g), or more, below the weight stamped on the cartridge.
- Screw cartridge into release mechanism, hand tighten.
- Remove locking pin.
- Close cover on enclosure, install locking pin through "STRIKE" button, and secure with visual seal, Part No. 197.

19. Record annual maintenance date on tag attached to unit and/or in a permanent file.

20. Inform proper personnel that the system is back in service.