EHRM INFRASTRUCTURE UPGRADES

950 CAMPBELL AVENUE, WEST HAVEN, CT 06516-2770

PROJECT #: 689-22-700

VOLUME 3 - ARCHITECTURAL SHEETS

BUILDINGS WITHIN THE SCOPE OF THIS PROJECT

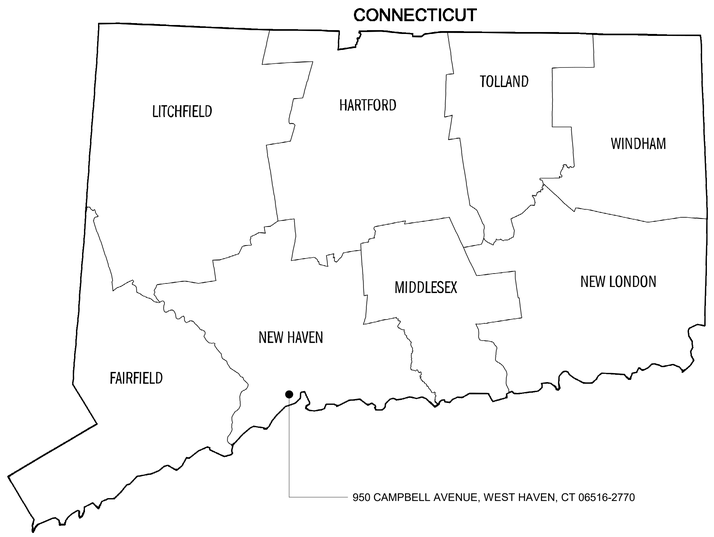

1 LOCATION MAP
1" = 30'-0"

2 SITE PLAN
1" = 150'-0"

SIGNATURE LINE

COR

PROJECT INFORMATION

CODE ANALYSIS

STATE: CONNECTICUT
COUNTY: NEW HAVEN
JURISDICTION: WEST HAVEN

OWNER: DEPARTMENT OF VETERANS AFFAIRS

ICRA CLASS REQUIREMENTS

REQUIREMENTS DEPENDENT ON EACH INDIVIDUAL ROOM LOCATION.

APPLICABLE BUILDING

BUILDING 1, 2, 2B, 3, 4, 5, 6, 11, 11A, 12, 12A, 14A, 15, 15A, 16, 16A, 21, 22, 24, 27-34, 35, 35A, 36, 36A, 41 (DATA CENTER), 42 (GENERATOR ENCLOSURE, FUEL YARD)

PROJECT DESCRIPTION

THE PROPOSED DESIGN SHALL IMPROVE, RECONFIGURE, EXPAND AND RENOVATE EXISTING SPACES FOR NEW TELECOMMUNICATION ROOMS, DATA CENTER, GENERATOR ENCLOSURE, AND FUEL YARD.

DESIGN TEAM

CIVIL
WSP USA, INC.
33301 9TH AVENUE SOUTH
FEDERAL WAY, WA 98003-2600
PHONE: (206) 431-2300

MECHANICAL
SPEES DESIGN BUILD
23830 PACIFIC HIGHWAY S. SUITE 300
KENT, WA 98032
PHONE: (206) 590-2118

ARCHITECTURAL
SPEES DESIGN BUILD
23830 PACIFIC HIGHWAY S. SUITE 300
KENT, WA 98032
PHONE: (206) 590-2118

PLUMBING
SPEES DESIGN BUILD
23830 PACIFIC HIGHWAY S. SUITE 300
KENT, WA 98032
PHONE: (206) 590-2118

STRUCTURAL
WSP USA, INC.
33301 9TH AVENUE SOUTH
FEDERAL WAY, WA 98003-2600
PHONE: (206) 431-2300

ELECTRICAL
SPEES DESIGN BUILD
23830 PACIFIC HIGHWAY S. SUITE 300
KENT, WA 98032
PHONE: (206) 590-2118

FIRE PROTECTION
SPEES DESIGN BUILD
23830 PACIFIC HIGHWAY S. SUITE 300
KENT, WA 98032
PHONE: (206) 590-2118

BUILDING TYPES

BUILDING 01 - HEALTHCARE
BUILDING 02 - HEALTHCARE
BUILDING 2B - ADMIN
BUILDING 03 - HEALTHCARE
BUILDING 04 - ADMIN
BUILDING 05 - HEALTHCARE
BUILDING 06 - ADMIN
BUILDING 11 - ADMIN
BUILDING 11A - ADMIN
BUILDING 12 - ADMIN
BUILDING 12A - ADMIN
BUILDING 14A - ADMIN
BUILDING 15 - ADMIN
BUILDING 15A - ADMIN
BUILDING 16 - ADMIN
BUILDING 16A - ADMIN
BUILDING 21 - ADMIN
BUILDING 22 - ADMIN
BUILDING 24 - ADMIN
BUILDING 27-34 - ADMIN
BUILDING 35 - ADMIN
BUILDING 35A - ADMIN
BUILDING 36 - HEALTHCARE
BUILDING 36A - ADMIN
41 (DATA CENTER) - ADMIN
42 (GENERATOR ENCLOSURE) - ADMIN

GENERAL NOTES

1. COORDINATE WORK WITH ALL CONTRACT DOCUMENTS, INCLUDING BUT NOT LIMITED TO DRAWINGS & SPECIFICATIONS.
2. SPECIFICATIONS SHALL SUPERSEDE DRAWINGS IN THE CASE OF ANY CONFLICTING INFORMATION. BRING TO THE AWARENESS OF AND VERIFY WITH VA COR PRIOR TO PROCEEDING.
3. THE CONTRACTOR AND ANY SUB CONTRACTORS SHALL FAMILIARIZE THEMSELVES WITH EXISTING CONDITIONS AND PROJECT REQUIREMENTS PRIOR TO SUBMITTING A BID OR BEGINNING WORK. NO ALLOWANCES WILL BE MADE ON BEHALF OF THE CONTRACTOR OR SUB-CONTRACTORS FOR FAILURE TO VISIT THE SITE.
4. THE CONTRACTOR SHALL FIELD VERIFY ALL EXISTING CONDITIONS BEFORE BEGINNING WORK. ANY CONFLICTS BETWEEN EXISTING CONDITIONS AND THE CONTRACT DOCUMENTS SHALL BE BROUGHT IMMEDIATELY TO THE ATTENTION OF THE COR.
5. ALL WORK SHALL BE PERFORMED WITH A HIGH-LEVEL OF WORKMANSHIP.
6. THE CONTRACTOR SHALL VERIFY ALL PRODUCT TYPES AND QUANTITIES DURING SITE WALKTHROUGH, PRIOR TO PURCHASING ANY MATERIALS, EQUIPMENT, PRODUCTS OR LABOR.
7. THE CONTRACTOR SHALL VERIFY AND COORDINATE WITH ALL INSTALLERS TO ENSURE COMPLIANCE WITH THE CONTRACT DOCUMENTS.

Revisions: | Date:

CONSULTANT/ DISCIPLINE
DISCIPLINE:

ARCHITECT/ ENGINEER OF RECORD
A/E:
SPEES DESIGN BUILD
23830 PACIFIC HIGHWAY S. SUITE 300
KENT, WA 98032
SPEESDESIGNBUILD

STAMP
10000 REGISTERED ARCHITECT JAMES M. KING STATE OF WASHINGTON

Office of Construction and Facilities Management
VA U.S. Department of Veterans Affairs

Drawing Title: COVER PAGE
Approved:
Phase: 100% CONSTRUCTION DOCUMENTS
Project Title: EHRM INFRASTRUCTURE UPGRADES - WEST HAVEN
Project Number: 689-22-700
Building Number:
Location: VA CT WEST HAVEN, 950 CAMPBELL AVENUE, WEST HAVEN, CT 06516
Drawing Number: G-001
Issue Date: 04/20/2026 | Checked: JS/JRS | Drawn: JRS

ARCHITECTURAL SYMBOLS

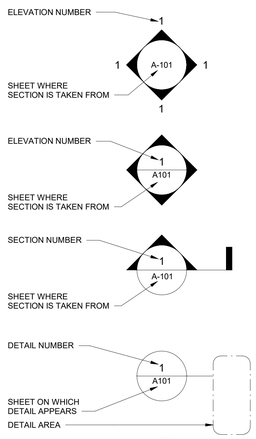

ELEVATION

BUILDING ELEVATION

BUILDING SECTION FLAG

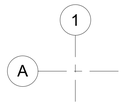

GRID LINES

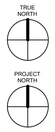

TRUE NORTH ARROW

PROJECT NORTH ARROW

ELEVATION MARKER

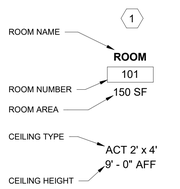

KEYNOTE

ROOM TAG (AREA OPTIONAL)

CEILING TAG

01a — WALL TAG

F01 — FLOOR TAG

R01 — ROOF TAG

101.1 — DOOR TAG

W01 — WINDOW TAG

A5175 — EQUIPMENT TAG

IN-03.01-01 — SIGNAGE TAG

EXISTING WALL TO DEMOLISH

EXISTING WALL TO REMAIN

TO DEMOLISH

EXISTING DOOR TO REMAIN

EXISTING DOOR TO DEMOLISH

NEW DOOR

NEW WALL

FIRE WALL (2 HOUR MIN.)

2 HOUR FIRE BARRIER

1 HOUR FIRE BARRIER

SMOKE PARTITION

SMOKE BARRIER

FEC — FIRE EXTINGUISHER CABINET

XFEC — EXISTING FIRE EXTINGUISHER CABINET

BATT INSULATION

RIGID INSULATION

GYPSUM BOARD, TYPE X

ACOUSTICAL CEILING TILE, 2' x 2'

ACOUSTICAL CEILING TILE, 2' x 4'

CONCRETE

STEEL

PLYWOOD

EARTH

ARCHITECTURAL ABBREVIATIONS

&	AND
∠	ANGLE
@	AT
℄	CENTERLINE
°	DEGREES
#	NUMBER
A.B.	ANCHOR BOLT
ABA	ARCHITECTURAL BARRIERS ACT
ABV.	ABOVE
A.C.T.	ACOUSTICAL CEILING TILE
A.C.M.	ASBESTOS CONTAINING MATERIAL
A.W.	ACOUSTICAL WALL
ADA	AMERICANS W/ DISABILITIES ACT
ADJ.	ADJACENT
A/E	ARCHITECT/ENGINEER
A.F.	ACCESS FLOOR
A.F.F.	ABOVE FINISH FLOOR
AGG.	AGGREGATE
ALT.	ALTERNATE
ALUM.	ALUMINUM
APPROX.	APPROXIMATELY
ARCH	ARCHITECT OR ARCHITECTURAL
ASPH.	ASPHALT
A/V	AUDIO / VIDEO
BARR.	BARRIER
BATH	BATHROOM
B.B.	BACKER BOARD
BLDG.	BUILDING
BLK.	BLOCK
BLKG.	BLOCKING
BLW.	BELOW
BM.	BEAM
B.M.T.U.	BONE MARROW TRANSPLANT UNIT
B.C.	BOTTOM OF CONCRETE
B.O.	BOTTOM OF
B.O.C.	BOTTOM OF CURB
B.O.S.	BOTTOM OF SLAB
BRC	BRACE, BRACING
BRKT.	BRACKET
BRNG.	BEARING
BTTM.	BOTTOM
BTWN.	BETWEEN
CAB.	CABINET
C.F.C.I	CONTRACTOR FURN. CONTR. INST.
CD	CONSTRUCTION OR CONTRACT DOCUMENTS
C.J.	CONTROL JOINT
CLG.	CEILING
CLR.	CLEAR(ANCE)
CMU	CONCRETE MASONRY UNIT
C.O.	CONTRACTING OFFICER
COL.	COLUMN
COMP.	COMPOSITION
CONC.	CONCRETE
CONN.	CONNECTION
CONST.	CONSTRUCTION
CONT.	CONTINUOUS
CONTR.	CONTRACTOR
COORD.	COORDINATE
C.O.R.	CONTRACTING OFFICER REPRESENTATIVE
CORR.	CORRIDOR
C.S.	CONCRETE SEALER
C.T.	CERAMIC TILE
CTR.	CENTER
C.F.V.I	CONTRACTOR FURN. VA INSTALLED
DBL.	DOUBLE
D.C.	DIRECT CURRENT
D.D.	DESIGN DEVELOPMENT
DEMO.	DEMOLISH OR DEMOLISION
DEPT.	DEPARTMENT
D.G.	DESIGN GUIDE
DTL.	DETAIL
DIA.	DIAMETER
DIM.	DIMENSION
DN.	DOWN
DR.	DOOR
DTL.	DETAIL
DWG.	DRAWING(S)
E.	EAST
EA.	EACH
E.J.	EXPANSION JOINT
ELEC.	ELECTRIC OR ELCTRICAL
ELEV.	ELEVATION
ELV.	ELEVATOR
ENG.	ENGINEER OR ENGINEERING
E.O.C.	EDGE OF CURB
E.O.P.	EDGE OF PAVEMENT
EPDM	ETHYLENE PROPYLENE DIENE TERPOLYMER
EQ.	EQUAL
EQUIP.	EQUIPMENT
E.S.	EACH SIDE
E.T.S.	EXPOSED TO STRUCTURE
EXIST.	EXISTING
EXP.	EXPANSION
EXT.	EXTERIOR
F.A.	FIRE ALARM
F.D.	FLOOR DRAIN
F.E.C.	FIRE EXTINGUISHER OR W/ CABINET
F.F.	FACTORY FINISH
F.F.B.	FINISH FLOOR BREAK
F.F.L.	FINISH FLOOR LINE
FIN.	FINISH OR FINISHED
FLSH.	FLASH OR FLASHING
FLR.	FLOOR OR FLOORING
FLRSNT.	FLUORESCENT
FNDN.	FOUNDATION
F.O.C.	FACE OF CONCRETE
F.O.F.	FACE OF FINISH
F.O.S.	FACE OF STUDS
F.P.	FIRE PROOF
F.R.	FIRE RATED
FRM.	FRAME
FT.	FOOT OR FEET
FTG.	FOOTING
FUR.	FURRING
FURN.	FURNISHED
GA.	GAUGE
GALV.	GALVANIZED
G.E.	GENERAL ELECTRIC
G.W.B.	GYPSUM WALL BOARD
G.C.	GENERAL CONTRACTOR
G.L.	GRID LINE
G.L.B.	GLUE LAMINATED BEAM
G.M.U.	GLASS MASONRY UNIT
GOVT.	GOVERNMENT
GYP.	GYPSUM WALL BOARD
HDR.	HEADER
HDWE.	HARDWARE
H.M.	HOLLOW METAL
HORIZ.	HORIZONTAL
H.P.D.L.	HIGH PRESSURE DECORATIVE LAM
HR	HOUR
HGHT.	HEIGHT
HVAC	HEATING, VENTILATION & AIR CONDITIONING
ICRA	INFECTIOUS CONTROL RISK ASSESSMENT
I.D.	INSIDE DIAMETER
I.L.S.M.	INTERIM LIFE SAFETY MEASURES
INCL.	INCLUDE OR INCLUDING
INST.	INSTALL
INSUL.	INSULATION
INT.	INTERIOR
JNT.	JOINT
KV	KILOVOLT
LAM.	LAMINATE(D)
LAV.	LAVATORY
L.C.M.	LEAD CONTAINING MATERIAL(S)
LT.	LIGHT
MAT.	MATERIAL OR MATERIALS
MAX.	MAXIMUM
MDF	MEDIUM-DENSITY FIBREBOARD
MECH	MECHANIC(AL)
MEP	MECHANICAL, ELECTRICAL, PLUMBING
MFR.	MANUFACTURE OR MANUFACTURER
MIN	MINIMUM
MISC.	MISCELLANEOUS
MOD.	MODIFIED
MTL.	METAL
N.	NORTH
N/A	NOT APPLICABLE
NEG	NEGATIVE
NO.	NUMBER
NOM	NOMINAL
NTS	NOT TO SCALE
O.C.	ON CENTER(S)
OPNG	OPENING
OPP	OPPOSITE
OPT.	OPTION OR OPTIONAL
OVHD.	OVERHEAD
PNT.	PAINT
P.C.	PRECAST CONCRETE
PCRA	PRE-CONSTRUCTION RISK ASSESSMENT
PL.	PLATE
PLAM.	PLASTIC LAMINATE
PLWD.	PLYWOOD
PNL.	PANEL
PR.	PAIR
PRFB.	PREFABRICATE(D)
PLSTC.	PLASTIC
P.T.	PRESSURE TREATED
PTN.(S)	PARTITION(S)
PVMT.	PAVEMENT
QUAL.	QUALITY
QUANT.	QUANTITY
RAD.	RADIUS
R.C.P.	REFLECTED CEILING PLAN
REF.	REFERENCE
REINF.	REINFORCE(D,ING)
REP.	REPRESENTATIVE
REQ.D.	REQUIRED OR REQUIREMENT
RESIL.	RESILIENT
REV.	REVERSE
R.F.	RADIO FREQUENCY
RF.	ROOF
RM.	ROOM
RMV.	REMOVE
R.O.	ROUGH OPENING
S.	SOUTH
SCT.	SECTION
SCHED.	SCHEDULE
SD	SCHEMATIC DESIGN
SECT.	SECTION
S.F.	SQUARE FEET
S.F.R.M.	SPRAY APPLIED FIRE-RESISTIVE MATERIAL
SHG.	SHINGLES
SHT.	SHEET
SHTH.	SHEATHING
SGN.	SIGN
SIM.	SIMILAR
SM.	SEAM
S.O.W.	SCOPE OF WORK
SPEC.	SPECIFICATION
SQ.	SQUARE
ST.STL.	STAINLESS STEEL
ST.	STAIN
STNDG.	STANDING
STL.	STEEL
STOR.	STORAGE
STRUCT.	STRUCTURAL
SUSP.	SUSPENDED
S.V.	SHEET VINYL
SYS.	SYSTEM
TEMP.	TEMPORARY
T&G	TONGUE AND GROOVE
THK.	THICK(NESS)
THRESH.	THRESHOLD
T.C.	TOP OF CONCRETE
T.O.C.	TABLE OF CONTENTS
T.O.S.	TOP OF SLAB
T.P.H.	TOILET PAPER HOLDER
TRANS.	TRANSITION
T.S.	TUBE STEEL
TYP.	TYPICAL
U.N.O.	UNLESS NOTED OTHERWISE
VA	VETERANS AFFAIRS
VAR.	VARIES OR VARIED
V.B.	VAPOR BARRIER
V.F.C.I.	VA FURNISHED & CONTRACTOR INSTALLED
VERT.	VERTICAL
V.I.F.	VERIFY IN FIELD
V.F.V.I.	VA FURNISHED, VA INSTALLED
W.	WEST
W/	WITH
WD.	WOOD
WIN.	WINDOW
WGHT.	WEIGHT
W/O	WITHOUT
W.R.	WATER RESISTANT

Revisions:	Date:

CONSULTANT/ DISCIPLINE

DISCIPLINE:

ARCHITECT/ ENGINEER OF RECORD

A/E:
SPEES DESIGN BUILD
23830 PACIFIC HIGHWAY S. SUITE 300
KENT, WA 98032

SPEESDESIGNBUILD

STAMP

10000 REGISTERED ARCHITECT JAMES M. KING STATE OF WASHINGTON

Office of Construction and Facilities Management

VA U.S. Department of Veterans Affairs

Drawing Title: ARCHITECTURAL SYMBOLS & ABBREVIATIONS

Phase: 100% CONSTRUCTION DOCUMENTS

Project Title: EHRM INFRASTRUCTURE UPGRADES - WEST HAVEN

Project Number: 689-22-700

Building Number:

Approved:

Location: VA CT WEST HAVEN, 950 CAMPBELL AVENUE, WEST HAVEN, CT 06516

Drawing Number: A-001

Issue Date: 04/20/2026 | Checked: JS/JRS | Drawn: JRS

APPLICABLE CODES

- AS AN AGENCY OF THE FEDERAL GOVERNMENT, THE VA IS NOT SUBJECT TO LOCAL IMPOSITIONS OF CODE ENFORCEMENT PROCEDURES (DRAWING REVIEWS, BUILDING PERMITS, INSPECTIONS, FEES, ETC). THE VA SHALL FUNCTION AS THE AUTHORITY HAVING JURISTICTION (AHJ).
- VA DIRECTIVES, DESIGN MANUALS, MASTER SPECIFICATIONS, VA NATIONAL CAD STANDARD APPLICATION GUIDE AND OTHER GUIDANCE ON THE TECHNICAL INFORMATION LIBRARY (TIL).
- INTERNATIONAL BUILDING CODE (IBC) 2018.
-
- INTERNATIONAL EXISTING BUILDING CODE (IEBC) 2018.
- NATIONAL FIRE PROTECTION AGENCY (NFPA) 101 LIFE SAFETY CODE. NFPA 101 TAKES PRECEDENCE OVER IBC.
- NFPA NATIONAL FIRE CODES, WITH THE EXCEPTION OF NFPA 5000 AND NFPA 900.
- OCCUPATIONAL, SAFETY AND HEALTH ADMINISTRATION (OSHA) STANDARDS.
- VA SEISMIC DESIGN REQUIREMENTS, H-18-8.
- NATIONAL ELECTRICAL CODE (NEC)
- INTERNATIONAL PLUMBING CODE (IPC).
- SAFETY CODE FOR ELEVATORS AND ESCALATORS, AMERICAN SOCIETY OF MECHANICAL ENGINEERS (ASME) A 17.1.
- ASME BOILER AND PRESSURE VESSEL CODE.
- ASME CODE FOR PRESSURE PIPING.
- ARCHITECTURAL BARRIER ACT ACCESSIBILITY STANDARDS (ABAAS), INCLUDING VA SUPPLEMENT BARRIER FREE DESIGN GUIDE (PG-18-3).
- BUILDING CODE REQUIREMENTS FOR REINFORCED CONCRETE, AMERICAN CONCRETE INSTITUE AND COMMENTARY (ACI 318).
- MANUAL OF STEEL CONSTRUCTION , LOAD AND RESISTANCE FACTOR DESIGN SPECIFICATIONS FOR STRUCTURAL STEEL BUILDINGS, AMERICAN INSTITUTE OF STEEL CONSTRUCTION (AISC).
- ENERGY POLICY ACT OF 2005 (EPACT).
- DOE INTERIM FINAL RULE: ENERGY CONSERVATION STANDARDS FOR NEW FEDERAL, COMMERCIAL AND MULTI-FAMILY HIGH-RISE RESIDENTIAL BUILDINGS AND NEW LOW-RISE RESIDENTIAL BUILDINGS, 10 CFR PARTS 433,434 AND 435.

APPLICABLE VA OR GOVT. PUBLICATIONS & STANDARDS

- FEDERAL LEADERSHIP IN HIGH PERFORMANCE AND SUSTAINABLE BUILDINGS: MEMORANDUM OF UNDERSTANDING (MOU).
- EXECUTIVE ORDER 13423: STRENGTHENING FEDERAL ENVIRONMENTAL, ENERGY AND TRANSPORTATON MANAGEMENT.
- THE PROVISIONS FOR CONSTRUCTION AND SAFETY SIGNS. STATED IN THE GENERAL REQUIREMENTS SECTION 01 01 0 OF THE VA MASTER CONSTRUCTION SPECIFICATION.
- VENTILATION FOR ACCEPTABLE INDOOR AIR QUALITY - ASHRAE STANDARD 62.1 - 2004.
- SAFETY STANDARD FOR REFRIDERATION SYSTEMS - ASHRAE STANDARD 15 - 2007.
- VAMC APPROVED HARDWARE LOCKING STANDARDS.
- AMERICAN NATIONAL STANDARDS INSTITUTE (ANSI).
- AMERICAN SOCIETY FOR TESTING MATERIALS (ASTM).
- FEDERAL COMMUNICATIONS COMMISSION (FCC), ALL REGULATIONS, PROCEDURES AND STANDARDS FOR TWO-WAY RADIO EQUIPMENT, SYSTEMS AND OPERATION.
- ILLUMINATING ENGINEERING SOCIETY OF NORTH AMERICA (IESNA).
- INSTITUTE OF ELECTRICAL AND ELECTRONIC ENGINEERS (IEEE).
- INTERNATIONAL ORGANIZATION FOR STANDARDIZATION (ISO), STANDARDS FOR PROTOCOLS AND INTERFACES THAT INCLUDE OPEN SYSTEM INTERCONNECTIONS (OSI).
- JOINT COMMISSION ON ACCREDITATION OF HEALTHCARE ORGANIZATIONS (JACHO), ENVIRONMENT OF CARE GUIDELINES AND STANDARDS.
- FACILITIES GUIDELINES INSTITUTE (FGI): 2010 , OR MOST CURRENT ISSUE, GUIDELINES FOR THE DESIGN AND CONSTRUCTION OF HEALTH CARE FACILITIES.
- THE AMERICAN INSTITUTE OF ARCHITECTS (AIA) AND NATIONAL SOCIETY OF PROFESSIONAL ENGINEERS(NSPE) RECENT ADDITIONS TO THEIR PROFESSIONAL CODES OF ETHICS ENCOURAGING "ENVIRONMENTALLY RESPONSIBLE DESIGN".

ARCHITECTURAL GENERAL NOTES

1. ALL WORK DONE BY THE CONTRACTOR OR SUB-CONTRACTORS SHALL BE PERFORMED WITH A HIGH LEVEL OF WORKMANSHIP.
2. MAINTAIN A SAFE, CLEAN CONSTRUCTION ZONE AT ALL TIMES.
3. DO NOT SCALE DRAWINGS.
4. DIMENSIONS ARE NOT ADJUSTABLE UNLESS NOTED WITH A +/- SYMBOL. ONLY NORMAL INDUSTRY STANDARD TOLERANCES ARE ACCEPTABLE DEVIATIONS FROM DIMENSIONS INDICATED.
5. ALL DIMENSIONS NOTED AS CLEAR SHALL MAINTAIN THE FULL SPACE INDICATED WITHOUT ENCROACHMENTS.
6. FURNISH ALL MATERIALS & PRODUCTS TO COMPLY WITH THE CONTRACT DOCUMENTS.
7. ALL VERTICAL HEIGHTS INDICATED ARE FROM THE FINISH FLOOR ELEVATION, UON.
8. ANY AND ALL WALL MOUNTED EQUIPMENT SHALL HAVE BLOCKING IN WALL BEHIND, THIS INCLUDES BACKING FOR WALL MOUNTED DOOR STOPS. ENSURE THAT ALL REQUIRED BACKING IS INSTALLED IN WALLS PRIOR TO INSTALLING DRYWALL.
9. IN TOILET ROOMS PROVIDE STAINLESS STEEL FILLER BEHIND ANY MIRRORS AND OTHER WALL MOUNTED ACCESSORIES WHEN ITEM IS INSTALLED PARTIALLY OVER CERAMIC TILE.
10. MOVE AND STORE ALL FURNITURE, FIXTURES, AND EQUIPMENT (FFE) AS NEEDED. FFE WILL BE COVERED WITH PLASTIC BEFORE BEING MOVED. FFE WILL BE MOVED BACK TO THE SAME LOCATION IT WAS ORIGINALLY LOCATED WHEN CONTRACTORS WORK IS COMPLETE. IF EQUIPMENT NEEDS TO BE MOVED OUTSIDE THE ROOM IT IS THE CONTRACTOR'S RESPONSIBILITY TO COVER ALL COSTS ASSOCIATED WITH MOVING, STORING, AND REINSTALLING FFE. MOVING, REMOVING ANY RETURN OF FURTNITURE WILL BE THE RESPONSIBILITY OF THE VA.
11. WHEN THE CONTRACTOR MOVES FFE, THE CONTRACTOR IS RESPONSIBLE FOR UNPLUGGING ALL EQUIPMENT FROM WALLS APPROPRIATELY. DURING REINSTALLATION OF FFE, IT IS THE CONTRACTOR'S RESPONSIBILITY TO RECONNECT POWER PLUGS. THE VA WILL RECONNECT ALL DATA TO THE NEW CAT 6A DATA PORTS.
12. WHILE CONSTRUCTION WORK TAKES PLACE, TEMPORARY SPRINKLERS MUST PROVIDE FULL COVERAGE TO AREAS IMPACTED BY WORK, INCLUDING THE INSTALLATION OF TEMPORARY ICRA BARRIERS. PROPOSED SPRINKLER WORK MUST ALSO BE COORDINATED TO HAPPEN CONCURRENTLY WITH THE REMOVAL OF THE TR CEILING.

    TEMPORARY ICRA BARRIERS ARE STILL REQUIRED PER NFPA 241. HOWEVER, THEY ARE NOT REQUIRED TO BE 1HR RATED SINCE SPRINKLER COVERAGE IS MAINTAINED VIA TEMPORARY SPRINKLERS.
13. REINSTALL CEILING TILES AT THE END OF EVERY WORK SHIFT.
14. IF FLOOR OR RATED WALL PENETRATIONS CANNOT BE FIRESTOPPED AT THE END OF THE WORK SHIFT DUE TO THE NEED TO PULL ADDITIONAL CABLES, TEMPORARY FIRE STOPPING COMPOSED OF MINERAL WOOL SHOULD BE INSTALLED IN THE PENETRATION TO PROVIDE PROTECTION AGAINST FIRE/SMOKE SPREAD THROUGH THE UNSEALED PENETRATION.
15. ANY EXISTING FIRE EXTINGUISHER REPLACED AS PART OF THIS PROJECT WILL BE CLEAN AGENT TYPE EXTINGUISHERS THAT MATCH OR EXCEED THE EXISTING EXTINGUISHER IN ABC RATING AND SIZE.
16. THE CONTRACTOR SHALL PROVIDE EVIDENCE THAT ALL PRODUCTS INSTALLS OR BROUGHT ONTO THE PREMISIS DO NOT CONTAIN ASBESTOS. AT THE TIME OF SUBMISSION THE CONTRACTOR SHALL PROVIDE A CERTIFIED LETTER FROM THE PRODUCT MANUFACTURER THAT THE PRODUCTS DO NOT CONTAIN ASBESTOS.
17. CONTRACTOR SHALL PROVIDE PITTSBURG PAINT COLOR SELECTION PER VA SPECIFICATIONS. VENDOR SHALL SUBMIT SUPPLY MIX FORMULAS.
18. PAINTS SELECTED FOR INTERIOR USE SHALL BE LOW ODOR.
19. EVALUATE EXISTING FLOOR HEIGHTS WHEN EXISTING INTERIOR WALLS ARE REMOVED. ADJACENT ROOMS MAY NOT BE AT THE SAME ELEVATION DUE TO VARIED EXISTING TOPPING SLAB ELEVATIONS. WHEN TOPPING SLAB ELEVATIONS ARE INCONSISTENT, CONTRACTOR TO PROVIDE NEW TOPPING SLAB, RAISING THE LOWER PORTIONS TO MATCH THE HEIGHT OF THE ROOM WITH THE TALLEST TOPPING SLAB. TOPPING SLAB WILL ALSO BE REQURIED IN PLACE OF THE EXISTING WALLS WHERE EXISTING WALLS ARE DEMO'D. ALL NEW / MODIFIED ROOMS WILL EACH BE AT A CONSISTENT ELEVATION.
20. DURING CONSTRUCTION, ELEVATOR ACCESS WILL BE COORDINATED BETWEEN THE CONTRACTOR AND THE COR.
21. CONTRACTOR TO COORDINATE FINAL LOCATION OF DUMPSTER WITH COR PRIOR TO CONSTRUCTION.
22. CONTRACTOR TO COORDINATE PARKING AND EQUIPMENT STAGING WITH COR PRIOR TO CONSTRUCTION.
23. CONTRACTOR TO COORDINATE BUILDING ACCESS WITH CHIEF ENGINEER, LOCK SHOP, AND OIT.

Revisions:	Date:

CONSULTANT/ DISCIPLINE

DISCIPLINE:

ARCHITECT/ ENGINEER OF RECORD

A/E:
SPEES DESIGN BUILD
23830 PACIFIC HIGHWAY S. SUITE 300
KENT, WA 98032

SDB SPEESDESIGNBUILD

STAMP

10000 REGISTERED ARCHITECT JAMES M. KING STATE OF WASHINGTON

Office of Construction and Facilities Management

VA U.S. Department of Veterans Affairs

Drawing Title: APPLICABLE CODES/ STANDARDS, ARCHITECTURAL GENERAL NOTES

Phase: 100% CONSTRUCTION DOCUMENTS

Project Title: EHRM INFRASTRUCTURE UPGRADES - WEST HAVEN

Project Number: 689-22-700

Building Number:

Approved:

Location: VA CT WEST HAVEN, 950 CAMPBELL AVENUE, WEST HAVEN, CT 06516

Issue Date: 04/20/2026 | Checked: JS/JRS | Drawn: JRS

Drawing Number: A-002

VA FORM 08 - 6231

08/05/2026 7:15:42 am

Autodesk Docs://689-22-700 VA CT West Haven EHRM II/VAWH_GEN SHEETS_SDB.rvt

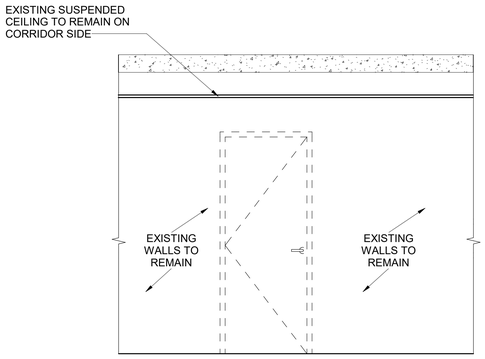

1 ICRA CLASS I DETAIL
1/2" = 1'-0"

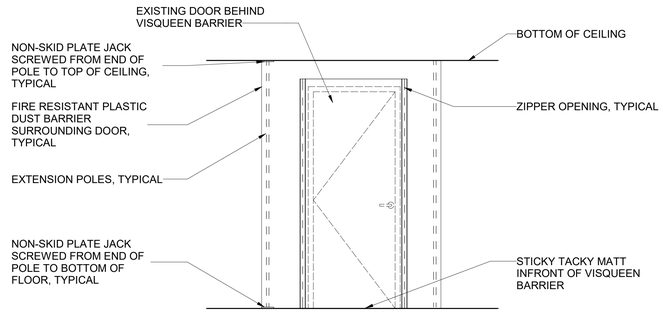

2 ICRA CLASS II DETAIL
1/2" = 1'-0"

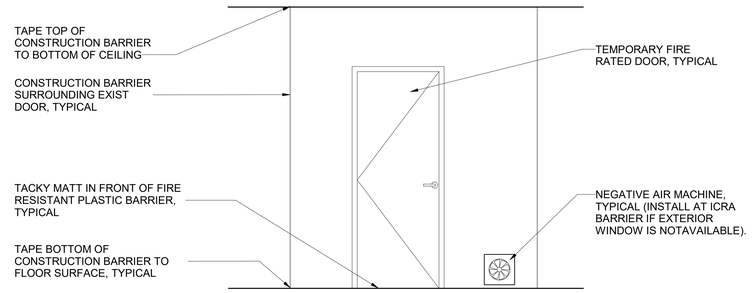

3 ICRA CLASS III DETAIL
1/2" = 1'-0"

ICRA DETAILS KEY

- (+) PRESSURE
- CONSTRUCTION ZONE, (- -) PRESSURE
- ANTE ROOM, (-) PRESSURE
- TEMPORARY ICRA BARRIER
- TEMPORARY ICRA DOOR
- CONSTRUCTION TACKY MATT
- NEGATIVE AIR MACHINE

ICRA DETAIL KEY NOTES

1. INSTALL TEMPORARY 1 HR CONSTRUCTION ICRA BARRIER TO SEPARATE CONSTRUCTION AREA FROM OCCUPIED SPACE.
2. INSTALL TEMPORARY POLY. FIRE RESISTANT, DUST BARRIER. MAY ONLY BE DURING NON FUNCTIONAL MEDICAL CENTER HOURS.
3. INSTALL FIRE RESISTANT TEMPORARY DOOR AT OPENING & MATCH RATING OF ICRA BARRIER, TYP.
4. PLACE TACKY CONSTRUCTION WALK-OFF MATS AT ENTRANCE & EXIT SIDE OF CONSTRUCTION ACTIVITY AREAS, TYPICAL.
5. FOR CLASS III, NEGATIVE PRESSURE AIR MACHINE IS REQ. & SHALL BE LOCATED EITHER AT THE ICRA BARRIER OR AT AN EXTERIOR WINDOW. COORDINATE WITH VA INFECTIOUS PREVENTION TEAM & THE VA's COR.

ICRA GENERAL NOTES

1. PROJECT SHALL CONFORM TO CLASS I, II, III & IV ICRA LEVEL OF INFECTION CONTROL BY PRECAUTION PER *ICRA-(VHA 2-23-1.0- TABLE 4 LEVEL ICRA & CONTROL PRECAUTIONS & TABLE 5 REQ. ICRA BY LEVEL OF PRECAUTIONS)*, OR AS DIRECTED BY THE VA.
2. CONTRACTOR IS RESPONSIBLE FOR COMPLYING WITH ALL REQUIREMENTS LISTED IN THE INFECTION CONTROL SECTION OF SPECIFICATION 01 35 26 - SAFETY REQUIREMENTS.
3. CONTRACTOR IS RESPONSIBLE FOR MAINTAINING ALL ICRA REQUIREMENTS. AT ANY TIME, THE VA's COR MAY HALT WORK UNTIL ALL REQUIREMENTS ARE COMPLIANT.
4. CONTRACTOR IS TO REMOVE OR ISOLATE EXIST. HVAC SYSTEMS WITHIN CONSTRUCTION AREA TO PREVENT DUST CONTAMINATION.
5. CONTRACTOR IS TO CONTAIN ALL CONSTRUCTION WASTE BEFORE TRANSPORT IN TIGHTLY COVERED CONTAINERS. WHEN POSSIBLE, REMOVE CONSTRUCTION DEBRIS WHEN AREA IS IN ACTIVE ISOLATION. CONTRACTOR IS RESPONSIBLE FOR THE REMEDIATION OF ANY HAZARDOUS MATERIALS IN ACCORD WITH VA, LOCAL, STATE OR FEDERAL TRANSPORT & DISPOSAL REQUIREMENTS.
6. CONSTRUCTION ZONE ENTRANCES & EXITS SHALL BE LOCKED AT ALL TIMES, UNLESS IN USE BY THE CONTRACTOR. WHEN IN USE, ACCESS WILL BE CONTROLLED & MONITORED BY THE CONTRACTOR.
7. ADHESIVE WALK-OFF CONSTRUCTION MATS ARE TO BE USED AT ALL CONSTRUCTION ZONES & ANTE ROOM ENTRANCES & EXITS.
8. TEMPORARY BARRIERS & DOORS MAY ONLY BE DEMOLISHED ONCE GIVEN FINAL APPROVAL BY THE VA's COR.
9. SEAL OFF ANY EXIST., UNUSED DOORS WITH TAPE DURING CONSTRUCTION, TYP.
10. DURING WORK IN AREAS DISTURBED BY CONSTRUCTION, CLASS I, II, III, & IV ICRA BARRIERS ARE TO CONFORM TO THE REQUIREMENTS OF THE PROJECT SPECIFICATIONS & THE *ICRA-(VHA 2023-1.0- TABLE 5- REQUIRED INFECTION PREVENTION & CONTROL MEASURES, BY LEVEL OF PRECAUTIONS.)*- SEE SHEET AS102.
11. PRIOR TO, & IN ORDER TO SATISFY COMPLETION OF WORK, ANY SPACE DESIGNATED WITH A CLASS I, II, III, & IV ICRA BARRIER, ON THESE DOCUMENTS OR AS DIRECTED BY THE VA, IS TO CONFORM TO THE REQUIREMENTS OF THE PROJECT SPECIFICATIONS & THE *ICRA-(VHA 2023-1.0- TABLE 6- MIN. INFECTION PREVENTION & CONTROL MEASURES REQUIRED UPON COMPLETION) & ICRA-(VHA 2023-1.0- INFECTION PREVENTION & CONTROL CONSTRUCTION/ RENOVATION/ MAINTENANCE PERMIT*- SEE SHEET AS102.

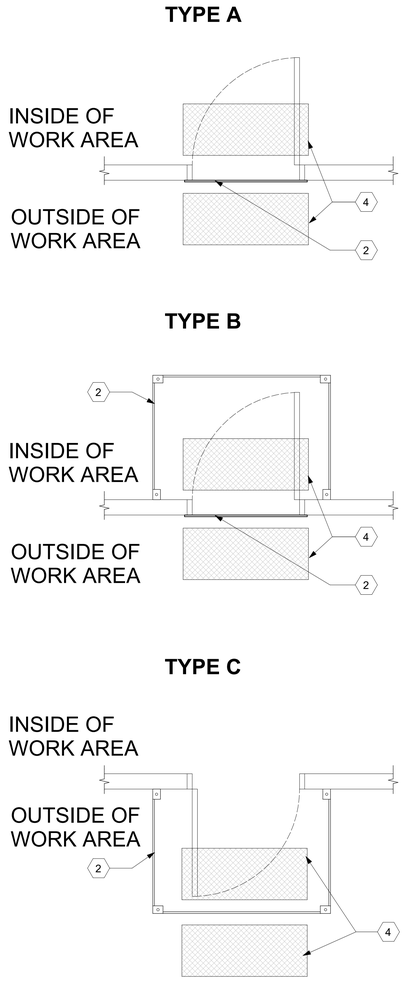

4 TYPICAL ICRA CLASS II BARRIER - PLAN VIEW
1/2" = 1'-0"

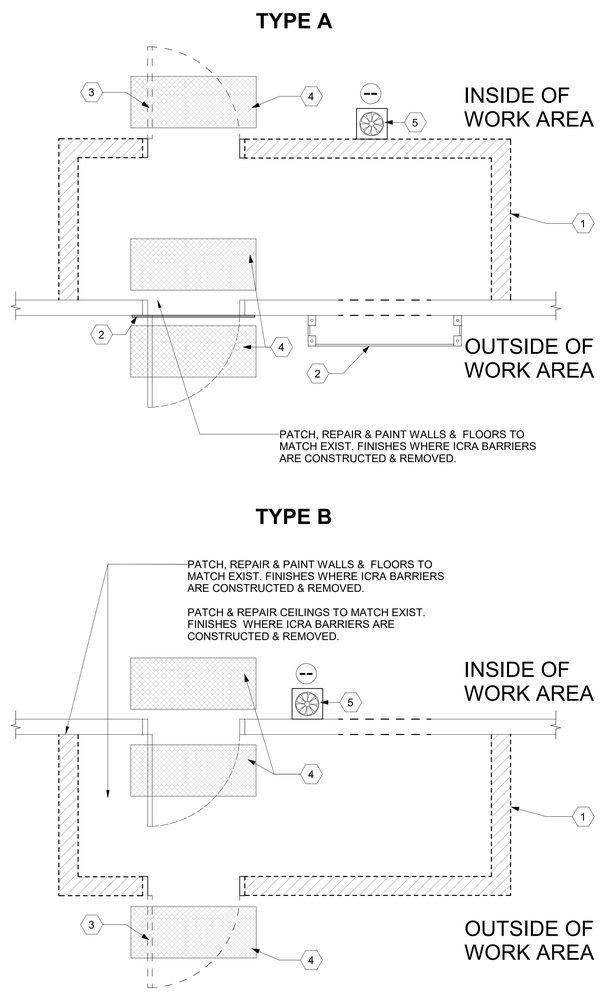

5 TYPICAL ICRA CLASS III BARRIER - PLAN VIEW
1/2" = 1'-0"

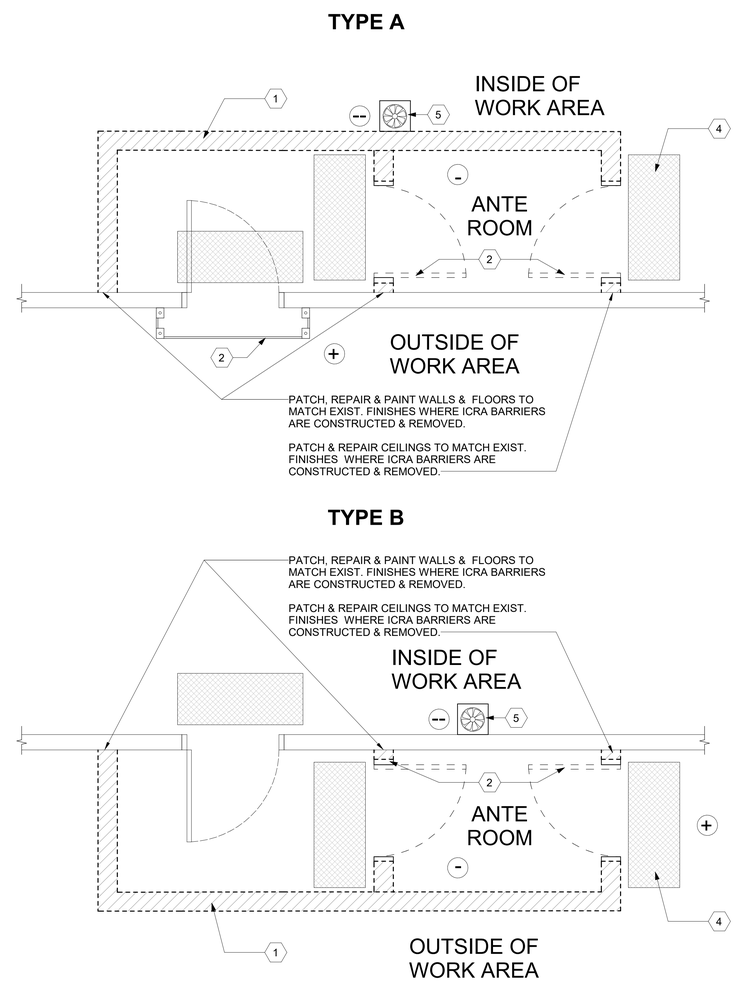

6 TYPICAL ICRA CLASS IV BARRIER - PLAN VIEW
1/2" = 1'-0"

Revisions:	Date:

CONSULTANT/ DISCIPLINE
DISCIPLINE:

ARCHITECT/ ENGINEER OF RECORD
A/E:
SPEES DESIGN BUILD
23830 PACIFIC HIGHWAY S. SUITE 300
KENT, WA 98032
SPEESDESIGNBUILD

STAMP
10000 REGISTERED ARCHITECT JAMES M. KING STATE OF WASHINGTON

Office of Construction and Facilities Management
VA U.S. Department of Veterans Affairs

Drawing Title: ICRA DETAILS
Approved:
Phase: 100% CONSTRUCTION DOCUMENTS
Project Title: EHRM INFRASTRUCTURE UPGRADES - WEST HAVEN
Project Number: 689-22-700
Building Number:
Location: VA CT WEST HAVEN, 950 CAMPBELL AVENUE, WEST HAVEN, CT 06516
Drawing Number: AS101
Issue Date: 04/20/2026
Checked: JS/JRS
Drawn: ME

VHA Infection Control Risk Assessment for Construction, Renovation and Maintenance

Introductory Information and Instructions

Use this template as a baseline for performing facility Infection Control Risk Assessments (ICRAs) for construction, renovation, and maintenance work (referred to as the "activity" in this document). The template provides minimum requirements for categorizing activity types and patient risk to determine the level of precautions needed to prevent infection risks. Facilities may customize this template to incorporate site-specific information and/or to add more stringent criteria.

This VHA ICRA template pertains specifically to infection prevention. It must be used if required by the VHA Pre-Construction Risk Assessment (PCRA) for the activity. *NOTE: The PCRA addresses other activity-related safety concerns (e.g., vibration, noise, hazardous materials) outside the scope of the ICRA.*

To complete the template:

1. Use **Table 1** to identify the category of the construction, renovation and/or maintenance activity.
2. Use **Table 2** to identify the areas affected by the activity.
3. Use **Table 3** to identify the overall patient risk category that will be affected by the activity.
4. Use **Table 4** to determine the level of infection prevention and control precautions needed for the activity.

Once all 4 steps above are completed: Refer to **Table 5** for the minimum required control measures for the level of infection prevention and control precautions needed for the activity. Refer to **Table 6** for the minimum infection prevention and control measures required on completion of the activity.

PERMIT: See the last page of this document for a fillable permit form to be used for posting at the activity site as needed.

Table 1 - Construction, Renovation, and/or Maintenance Activity Category

NOTE: *If any of the bulleted criteria in a higher activity category pertains to the work that will be done (even if the other criteria are in a lower category), use the higher activity category for the VHA ICRA.*

Activity Category determined from Table 1 (*A, B, C, or D*): A

Category A	**Inspection and/or facility upkeep generally defined as follows**: • Work can be completed in a single shift, not to exceed 10 hours. • Patients and/or employees may be in the area depending on the activity. • Work that does not create dust or debris. • Removal of ceiling tile or access to mechanical or electrical chase for visual inspection limited to 1 tile per 50 square feet with limited exposure time (not to exceed an hour for each tile) within the shift. • Minor interior updates (e.g., replacing floor or ceiling tiles, carpentry work to include hanging signage, and painting without sanding) that do not create dust or debris. • Limited building system maintenance such as basic plumbing on potable systems (e.g., faucet replacement) or basic electrical work such as replacement of light bulbs, receptacles, or switches.
Category B	**General maintenance and repair work generally defined as follows:** • Prolonged inspection and work that may take longer than a single shift but not exceeding a week. • Patients and employees are not to be in the area until activity is completed. • Work that creates minimal dust and debris.

VHA Infection Control Risk Assessment for Construction, Renovation and Maintenance

	• Interior finish or surface repairs, updates, or modifications such as repair of firewalls and barriers, and new flooring that produces minimal dust and debris. Controlled sanding activities (e.g., wet or dry sanding) that produce minimal dust and debris. • Plumbing work such as installation or replacement of a single fixture or piping for a single fixture. Any work on sanitary plumbing including snaking of drains. • Electrical work such as installation of cabling/wiring/conduit for a single device, installation of new device such as a light fixture that produces minimal dust and debris. • Air Handler and/or fan shutdown/startup and HVAC work such as replacement of a single diffuser, single terminal unit or a single device that produces minimal dust and debris.
Category C	**Small-scale construction, renovation, or maintenance generally defined as follows**: • Work requiring longer than a single week to complete but not exceeding 6 months. • Patients and employees are not to be in the area until activity is completed. • Demolition/removal of preexisting floor covering, casework, lay-in ceiling, or other architectural elements. • Demolition/removal of more than 32 ft^2 of drywall/framing, hard ceilings, and doors/framing and minimal infrastructure such as electrical circuits and branch piping. • Installation of new walls, ceilings and doors including framing, drywall/plaster and associated work. • Plumbing work such as the installation of new sinks, showers and toilets and associated plumbing. • Shut down of sections of potable water systems. • Electrical work such as installation of conduit and wire for lighting, receptacles and switches for an area, the installation of conduit and wire for new devices such as terminal units, fans etc. • Modification of existing fire alarm and suppression systems. • Mechanical work such as the installation of ductwork, diffusers, and terminal units for an area.

Category D	**Large-scale construction, renovation, or maintenance generally defined as follows**:
	• Work exceeding 6 months in duration.
	• Patients and employees are not to be in the area until activity is completed.
	• Large-scale demolition of building components and infrastructure including removal of multiple doors, walls, framing, ceilings, flooring, piping, electrical and HVAC.
	• The installation building components such as new walls, ceilings and doors including framing, drywall and associated plaster work.
	• Plumbing work such as the installation of:
	  o new medical gas systems,
	  o steam/heating hot water, condensate systems,
	  o multiple sinks, showers and toilets including associated plumbing.
	• Shutdown of potable water, steam/heating hot water, condensate, and medical gas systems.
	• Electrical work such as installation of electrical feeders, distribution panels, conduit and wire for lighting, receptacles and switches for an area, the installation of conduit and wire for new devices such as terminal units, fans etc.
	• Installation of fire alarm and suppression systems.
	• Electrical shutdown of multiple panels.
	• Mechanical work such as the installation of air handling equipment, associated ductwork, diffusers, heat exchangers, terminal units and controls.

VHA Infection Control Risk Assessment for Construction, Renovation and Maintenance

Table 2 - Affected Area Assessment

Identify the areas and associated patients that will be affected by the construction/renovation/maintenance activity (see the Figure for a visual representation of adjacent affected areas).

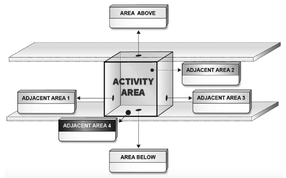

Figure: Isometric drawing of affected area assessment

Area	Service(s)/Type(s) of Area(s) *(e.g., OR, Unit/Ward, Sterile Processing, Administrative, etc.)**	Point of Contact (POC)	POC Contact Information
Activity Area**			
Area Above			
Area Below			
Adjacent Area 1			
Adjacent Area 2			
Adjacent Area 3			
Adjacent Area 4			

* There may be more than one Service/type of area for each row. List all.

** List the area(s) in which the construction/renovation/maintenance activity will occur. ***NOTE: When the Activity Category is B, C, or D, the control measures are determined by the Patient Risk in the adjacent affected areas.***

VHA Infection Control Risk Assessment for Construction, Renovation and Maintenance

Table 3 - Patient Risk Category

Using Table 3, identify the patient risk category for each area listed in Table 2. Of the patient risk categories identified, select the one with the greatest risk as the overall Patient Risk Category for the activity.

Overall Patient Risk Category determined from Table 3 (*Low, Medium, High, or Highest*): Low

Low Risk	Medium Risk	High Risk	Highest Risk
Non-patient care areas such as:	Patient care support areas such as:	Patient care areas such as:	Procedural, invasive, sterile support and highly compromised patient care areas such as:
• Public hallways and gathering areas not in clinical areas • Office areas not in clinical areas • Breakrooms not in clinical areas • Bathrooms or locker rooms not in clinical areas • Mechanical/electrical rooms not in clinical areas	• Waiting areas • Clinical engineering (biomedical) • Materials management • Sterile processing department – dirty side • Kitchen, cafeteria, gift shop, coffee shop, and food kiosks	• Patient care rooms and areas, including spinal cord injury units • All acute care units, including mental health • All outpatient units and clinics • Emergency department • Community Living Centers, domiciliaries, and transitional residences • Employee health • Pharmacy – general work zone • Medication rooms and clean utility rooms • Imaging suites – diagnostic imaging • Laboratory	• All transplant units • All intensive care units • All oncology units and chemotherapy/infusion centers • OR theaters and restricted areas • Hemodialysis units • Procedural rooms* • Pharmacy compounding area • Sterile processing department – clean side • Transfusion services • Imaging suites – interventional imaging • Dedicated isolation wards/units for infectious diseases

* Procedural Rooms are designated for the performance of patient care activities that may require high-level disinfected or sterile instruments and some environmental controls but is not required to be performed with the environmental controls of an operating room (OR). The room is intended for procedures that are performed in an aseptic surgical field and penetrates the protective surfaces of a patient's body (e.g., subcutaneous tissue, mucous membranes, cornea) or entry into or opening of a sterile body cavity. Examples of these spaces include, and are not limited to, Cardiac Catheterization Suites, Electrophysiology Suites, Endovascular/GI Suites, Angio Suites and other spaces which may have high risk patient populations.

VHA Infection Control Risk Assessment for Construction, Renovation and Maintenance

Table 4 - Level of Infection Prevention and Control Precautions

Match the Overall Patient Risk Category (*Low, Medium, High, Highest*) determined from Table 3 with the planned Construction/Renovation/Maintenance Activity Category (*A, B, C, D*) from Table 1 to determine the minimum Level of Infection Prevention and Control Precautions (*I, II, III, or IV*) using Table 4 below.

Level of Precautions determined from Table 4 (*I, II, III, or IV*): I

Patient Risk Category	Activity Category A	B	C	D
Low Risk	I	II	II	III
Medium Risk	I	II	III	IV
High Risk	I	II	IV	IV
Highest Risk	II	III	IV	IV

An infection prevention and control permit is required for Level III and Level IV. Consult with Infection Prevention and Control for Level I and Level II.

Table 5 - Required Infection Prevention and Control Measures, by Level of Precautions

Controls defined below for the Level of Precautions identified for the activity must be in place before the activity begins and maintained until work is completed and the area is activated. Control measures for each Precaution Level must also include the control measures in the preceding Level(s).

As the activity progresses, a full re-evaluation of remaining activity type and patient risk is required prior to downgrading the Level of Precautions.

Level of Precautions	Control Measures
Level I	1. Perform work activity in a manner that does not create dust. 2. Immediately replace any ceiling tile, close access panels, etc., upon completion of work. 3. Any materials and equipment being brought into the facility must be free of contaminants and loose material.
Level II	**All control measures in Level I and the following:** 1. Provide active means to control airborne dust from dispersing into occupied areas and/or water mist surface to control dust (e.g., Mobile Dust Containment Cart or some other system). 2. Ensure worker clothing is clean and free of visible dust before leaving the work area. 3. Remove or isolate air diffusers (supply and return) to protect the HVAC system from dust and reduce air turbulence. Rebalance system to address diffuser isolation.

VHA Infection Control Risk Assessment for Construction, Renovation and Maintenance

	4. When the work involves or impacts potable water systems including stagnation due to reduced usage, the piping shall be flushed twice a week or isolated from the main system. 5. Seal doors to prevent dust migration. 6. Contain all trash and debris in the work area. Perform daily cleaning and disposal of trash (covered) from work area using an identified exit route. 7. Any equipment, tools, or materials removed from the work area must be in sealed containers and/or cleaned of dust and debris prior to removal from the area. 8. Nonporous/smooth and cleanable containers (with a hard lid) must be used to transport trash and debris from the construction areas. These containers must be damp-wiped cleaned and free of visible dust/debris before leaving the contained work area. 9. Install a sticky (dust collection) mat at entrance of contained work area based on facility policy. Sticky mats must be changed routinely and when visibly soiled. 10. Maintain clean surroundings when area is not contained by damp mopping or HEPA vacuuming surfaces at least daily.
Level III	**All control measures in Levels I and II and the following:** 1. Ensure availability of equipment for cleaning hands. 2. Construct and complete critical barriers meeting NFPA 241 requirements. Barriers must extend to the ceiling or if ceiling tile is removed, to the deck above. 3. All (plastic or hard) barrier construction activities must be completed in a manner that prevents dust release. Plastic barriers must be effectively affixed to floor and ceiling (or floor/roof deck above) and secure from movement or damage. 4. Seal all penetrations in containment barriers, including floors and ceiling, using approved materials (UL schedule firestop if applicable for barrier type). 5. Maintain .01 inches /water gauge negative pressurization of the entire workspace by use of HEPA exhaust air systems directed outdoors, or comply with the alternative method outlined in Appendix A of this document. These control measures must be maintained continuously 24/7 for the duration of the project. HEPA filtered exhaust if discharged directly to the outdoors must be at a distance of 25 feet or greater from entrances, air intakes and operable windows. Exhausting discharged air into shared or recirculating HVAC systems, or other shared exhaust systems (e.g., bathroom exhaust) is prohibited. 6. Install a differential pressure sensing device (e.g., magnehelic, manometer, or digital monitoring) on exterior of work containment to continually monitor and document negative pressurization. The "ball in the wall" or similar apparatus are not acceptable.
Level IV	**All control measures in Levels I, II and III and the following:** 1. Barriers must be hard barriers unless temporary to install final barrier. 2. Containment must include an anteroom to ensure pressure control. Anteroom must be large enough for equipment staging, cart cleaning, workers' PPE and cleaning. 3. Worker clothing and/or PPE must be removed or clean and free of visible dust before leaving the work area anteroom. HEPA vacuuming of clothing or use of cover suits is acceptable. 4. Workers must wear shoe covers or have a method to clean shoes in anteroom. Shoe covers must be removed prior to exiting the anteroom to the occupied space (non-work area). Damaged shoe covers must be changed immediately.

VHA Infection Control Risk Assessment for Construction, Renovation and Maintenance

Table 6 - Minimum Infection Prevention and Control Measures Required Upon Completion of the Activity

Controls defined below shall be completed upon completion of the activity and inspected prior to terminating measures defined in Table 5.

Level of Precautions	Measures
Levels I - II	**Cleaning:** 1. Clean work areas including all environmental surfaces, high horizontal surfaces and flooring materials. 2. Check all supply and return air registers for dust accumulation on upper surfaces as well as air diffuser surfaces. **HVAC Systems:** 1. Remove isolation of HVAC system in areas where work is being performed. Verify that HVAC systems are clean and operational. 2. Verify the HVAC systems meet original airflow and air exchange design specifications. **Water systems:** 1. Until the potable water system is activated and in use, flushing shall continue at least twice per week in accordance with VHA Directive 1061.

Levels III - IV	Construction areas must be inspected by an infection preventionist and engineering representative (and others as determined by the facility) for final activity/project close out and removal of infection prevention and control measures.
	
	Work Area Cleaning:
	1. Clean work areas including all environmental surfaces, high horizontal surfaces and flooring materials.
	2. Check all supply and return air registers for dust accumulation on upper surfaces as well as air diffuser surfaces.
	Removal of Critical Barriers:
	1. Critical barriers must remain in place during all work involving drywall removal, creation of dust and activities beyond simple touch-up work. The barrier may NOT be removed until a work area cleaning has been performed. Additional cleaning may be needed after removal of barrier.
	2. All (plastic or hard) barrier removal activities must be completed in a manner that prevents dust release. Use the following precautions when removing hard barriers:
	  i. Carefully remove screws and painter tape.
	  ii. If dust will be generated during screw removal, use hand-held HEPA vacuum.
	  iii. Drywall cutting is prohibited during removal process.
	  iv. Clean all stud tracks with HEPA vacuum before removing outer hard barrier.
	  v. Use a plastic barrier to enclose area if dust could be generated.
	Negative Air Requirements:
	1. The use of negative air must be designed to remove contaminants from the work area.
	2. Negative air devices (fans, filters, monitoring and documentation equipment) must remain operational at all times and in place for a period after completion of dust creating activities to remove contaminants from the work area and before removal of critical barriers.
	HVAC systems:
	1. Upon removal of critical barriers, remove isolation of HVAC system in areas where work is being performed.
	2. Verify that HVAC systems are clean and operational.
	3. Verify and document through a TAB the HVAC systems meets original airflow and air exchange design specifications.
	Water systems:
	1. Until the potable water system is activated and in use, flushing shall continue at least twice per week in accordance with VHA Directive 1061.

Infection Prevention and Control Construction/Renovation/Maintenance Permit

This page must be posted at the entrance to the project area for Level III and Level IV activities.

Unique permit number:			
Location of construction/renovation/maintenance			
Project manager		Project start date	
Contact phone number		Completion date	
Contractor		Permit expiration date	

Activity Category (*A, B, C, or D*)	A	Overall Patient Risk Category (*Low, Medium, High, or Highest*)	Low	Level of Infection Prevention and Control Precautions (*I, II, III, or IV*)	I

Level of Precautions	Control measures to be in place for the duration of the activity *(Check the box for the activity's Level of Precautions to indicate the Control Measures)*
Level I ☐	1. Perform work activity in a manner that does not create dust. 2. Immediately replace any ceiling tile, close access panels, etc., upon completion of work. 3. Any materials and equipment being brought into the facility must be free of contaminants and loose material.
Level II ☐	**All control measures in Level I and the following:** 1. Provide active means to control airborne dust from dispersing into occupied areas and/or water mist surface to control dust (e.g., Mobile Dust Containment Cart or some other system). 2. Ensure worker clothing is clean and free of visible dust before leaving the work area. 3. Remove or isolate air diffusers (supply and return) to protect the HVAC system from dust and reduce air turbulence. Rebalance system to address diffuser isolation. 4. When the work involves or impacts potable water systems including stagnation due to reduced usage, the piping shall be flushed twice a week or isolated from the main system 5. Seal doors, to prevent dust migration. 6. Contain all trash and debris in the work area. Perform daily cleaning and disposal of trash (covered) from work area using an identified exit route. 7. Any equipment, tools, or materials removed from the work area must be in sealed containers and/or cleaned of dust and debris prior to removal from the area. 8. Nonporous/smooth and cleanable containers (with a hard lid) must be used to transport trash and debris from the construction areas. These containers must be damp-wiped cleaned and free of visible dust/debris before leaving the contained work area. 9. Install a sticky (dust collection) mat at entrance of contained work area based on facility policy. Sticky mats must be changed routinely and when visibly soiled. 10. Maintain clean surroundings when area is not contained by damp mopping or HEPA vacuuming surfaces at least daily.
Level III ☐	**All control measures in Levels I and II and the following:** 1. Ensure availability of equipment for cleaning hands. 2. Construct and complete critical barriers meeting NFPA 241 requirements. Barriers must extend to the ceiling or if ceiling tile is removed, to the deck above. 3. All (plastic or hard) barrier construction activities must be completed in a manner that prevents dust release. Plastic barriers must be effectively affixed to floor and ceiling (or floor/roof deck above) and secure from movement or damage. 4. Seal all penetrations in containment barriers, including floors and ceiling, using approved materials (UL schedule firestop if applicable for barrier type). 5. Maintain .01 inches /water gauge negative pressurization of the entire workspace by use of HEPA exhaust air systems directed outdoors, or comply with the alternative method outline in Appendix A of the VHA ICRA template. These control measures must be maintained continuously 24/7 for the duration of the project. Exhausting discharged air into shared or recirculating HVAC systems, or other shared exhaust systems (e.g., bathroom exhaust) is prohibited. **Check box to indicate exhaust method:** Exterior ☐ Alternative Interior Method ☐ 6. Install a differential pressure sensing device (e.g., magnehelic, manometer, or digital monitoring) on exterior of work containment to continually monitor and document negative pressurization. The "ball in the wall" or similar apparatus are not acceptable.
Level IV ☐	**All control measures in Levels I, II and III and the following:** 1. Barriers must be hard barriers unless temporary to install final barrier. 2. Containment must include an anteroom to ensure pressure control. Anteroom must be large enough for equipment staging, cart cleaning, workers' PPE and cleaning. 3. Worker clothing and/or PPE must be removed or clean and free of visible dust before leaving the work area anteroom. HEPA vacuuming of clothing or use of cover suits is acceptable. 4. Workers must wear shoe covers or have a method to clean shoes in anteroom Shoe covers must be removed prior to exiting the anteroom to the occupied space (non-work area). Damaged shoe covers must be changed immediately.

Additional requirements:			
Project Manager signature		Date	
Infection Preventionist signature		Date	

Appendix A: Alternative To Outdoor Exhaust Requirements

This Appendix provides an equivalent ICRA control measure to requirements detailed in this VHA ICRA template (Table 5 Level III, item 5) that would allow interior construction space exhaust.

Interior Construction Space Exhaust:

If the facility is not able to exhaust to the building exterior, the Healthcare Environment and Facilities program office has identified an alternate industry-recognized standard interior exhaust procedure that is accepted as providing an equivalent level of infection prevention and control (IPC), and safety. The alternate interior exhaust procedure is implemented by completing the following:

a. If exhaust is directed indoors, then the system must be HEPA filtered. Prior to start of work, including assembly of the ICRA barriers, initial baseline air sampling measurements for particulate levels must be taken in the planned area of discharge. Once containment is erected and completed, HEPA filtration must then be verified by particulate measurement, using a particle counter with multi-channel capabilities to measure down to 0.3 microns, to confirm that the discharge of the HEPA unit does not exceed the baseline particulate count of the area to which the exhaust is directed. Verification must continue at least three times per day (once every 8 hours), 7 days per week, during the use of the negative air machine and HEPA filter. Any exceedance must trigger a work stoppage and an immediate response and resolution. All particulate measurements, including the baseline measurement, must be documented and retrievable.
b. To accommodate the sampling, the negative air pressure machine must be fitted with a 2 ft section of rigid ductwork at the discharge. The sample port for monitoring must be in the rigid ductwork section.
c. Vapor generating processes must be assessed and appropriate filtration must be installed to mitigate transmission to the facility.
d. Engineering must do a complete flow and pressure analysis and document the area to which the air is being discharged to ensure the flow and pressure relationships in that area are not being adversely impacted by the additional flow. Ideally, this is done as part of the construction package to ensure the design is implementable and no additional HVAC changes are required to accommodate the exhaust from the negative air equipment.
e. Install device on exterior of work containment to continually monitor negative pressurization. To ensure proper pressure is continuously maintained, the device(s) shall have a visual pressure indicator, data collection and alarm.
f. Exhaust must be directed to Low Risk areas as defined in Table 3 in this VHA ICRA template. Ideally this discharge must be located so as not to impinge on high traffic areas or create a nuisance with noise or excessive airflow.

NOTE: *Exhaust into shared or recirculating HVAC systems, or other shared exhaust systems (e.g., bathroom exhaust) is not acceptable.*

Revisions:	Date:

CONSULTANT/ DISCIPLINE

DISCIPLINE:

ARCHITECT/ ENGINEER OF RECORD

A/E:
SPEES DESIGN BUILD
23830 PACIFIC HIGHWAY S. SUITE 300
KENT, WA 98032

SPEESDESIGNBUILD

STAMP

REGISTERED ARCHITECT 10000 JAMES M. KING STATE OF WASHINGTON

Office of Construction and Facilities Management

VA U.S. Department of Veterans Affairs

Drawing Title	ICRA STANDARDS
Phase	100% CONSTRUCTION DOCUMENTS
Project Title	EHRM INFRASTRUCTURE UPGRADES - WEST HAVEN
Project Number	689-22-700
Building Number	
Approved:	
Location	VA CT WEST HAVEN 950 CAMPBELL AVENUE, WEST HAVEN, CT 06516
Drawing Number	AS102
Issue Date	04/20/2026
Checked	JS/JRS
Drawn	ME

VA FORM 08 - 6231

08/05/2026 7:15:52 am

Autodesk Docs://689-22-700 VA CT West Haven EHRM IUVAWH_GEN SHEETS_SDB.rvt

DOOR SCHEDULE

BLDG #	LEVEL	DOOR NUMBER	DOOR SIZE WIDTH	DOOR SIZE HT.	DOOR SIZE THK	DOOR TYPE	HW	DOOR MAT	DOOR FIN	DOOR FRAME MAT	DOOR FRAME FIN	FIRE RATING	Comments
001	LEVEL 0SG	SG171	3' - 0"	8' - 0"	0' - 1 3/4"	2A	SH-3D	WOOD	STAIN	HM	PAINT	-	-
001	LEVEL 0SG	SG105B	3' - 0"	7' - 0"	0' - 1 3/4"	2A	SH-3D	WOOD	STAIN	HM	PAINT	-	-
001	LEVEL 0SG	SG170A	3' - 0"	7' - 0"	0' - 1 3/4"	1A	SH-3D	WOOD	STAIN	HM	PAINT	-	-
001	LEVEL 0G	G277	3' - 0"	7' - 0"	0' - 1 3/4"	2A	SH-3D	WOOD	STAIN	HM	PAINT	-	-
001	LEVEL 0G	G192A	3' - 0"	7' - 0"	0' - 1 3/4"	1A	SH-3D	WOOD	STAIN	HM	PAINT	-	-
001	LEVEL 0G	G192C	3' - 0"	7' - 0"	0' - 1 3/4"	1A	SH-3D	WOOD	STAIN	HM	PAINT	-	-
001	LEVEL 0G	G192	3' - 0"	7' - 0"	0' - 1 3/4"	2A	SH-3D	WOOD	STAIN	HM	PAINT	-	-
001	LEVEL 0G	G108	3' - 0"	7' - 0"	0' - 1 3/4"	2A	SH-3D	WOOD	STAIN	HM	PAINT	-	-
001	LEVEL 0G	G192B	3' - 0"	7' - 0"	0' - 1 3/4"	3A	3A	WOOD	STAIN	HM	PAINT	-	-
001	LEVEL 01	1190	3' - 0"	7' - 0"	0' - 1 3/4"	2A	SH-3D	WOOD	STAIN	HM	PAINT	-	
001	LEVEL 02	2151	3' - 0"	7' - 0"	0' - 1 3/4"	2A	SH-3D	WOOD	STAIN	HM	PAINT	-	-
001	LEVEL 03	3154	3' - 0"	7' - 0"	0' - 1 3/4"	2A	SH-3D	WOOD	STAIN	HM	PAINT	-	-
001	LEVEL 04	4259A	3' - 0"	8' - 0"	0' - 1 3/4"	2A	SH-3D	WOOD	STAIN	HM	PAINT	-	-
001	LEVEL 05	5195	3' - 0"	8' - 0"	0' - 1 3/4"	2A	SH-3D	WOOD	STAIN	HM	PAINT	-	-
001	LEVEL 06	6204	3' - 0"	8' - 0"	0' - 1 3/4"	2A	SH-3D	WOOD	STAIN	HM	PAINT	-	-
001	LEVEL 07	7204	3' - 0"	8' - 0"	0' - 1 3/4"	2A	SH-3D	WOOD	STAIN	HM	PAINT	-	-
001	LEVEL 08	8139	3' - 0"	7' - 0"	0' - 1 3/4"	2A	SH-3D	WOOD	STAIN	HM	PAINT	-	-
001	LEVEL 09	9122A	3' - 0"	8' - 0"	0' - 1 3/4"	2A	SH-3D	WOOD	STAIN	HM	PAINT	-	-
001	LEVEL 09	9122B	2' - 6"	7' - 0"	0' - 1 3/4"	1A	SH-3D	WOOD	STAIN	HM	PAINT	-	
002	LEVEL 0G	G132	6' - 0"	7' - 0"	0' - 1 3/4"	4A	3E	WOOD	STAIN	HM	PAINT	-	-
002	LEVEL 0G	G132A	3' - 0"	7' - 0"	0' - 1 3/4"	2A	SH-3D	WOOD	STAIN	HM	PAINT	-	-
002	LEVEL 0G	G143C	3' - 0"	7' - 0"	0' - 1 3/4"	2A	SH-3D	WOOD	STAIN	HM	PAINT	-	-
002	LEVEL 01	1303B	3' - 0"	7' - 0"	0' - 1 3/4"	2A	SH-3D	WOOD	STAIN	HM	PAINT	-	-
002	LEVEL 01	1279A	3' - 0"	8' - 0"	0' - 1 3/4"	2A	SH-3D	WOOD	STAIN	HM	PAINT	-	-
002	LEVEL 01	1238	3' - 0"	7' - 0"	0' - 1 3/4"	1A	SH-3D	WOOD	STAIN	HM	PAINT	-	-
002	LEVEL 01	1239	3' - 0"	8' - 0"	0' - 1 3/4"	2A	SH-3D	WOOD	STAIN	HM	PAINT	-	-
002	LEVEL 02	2107D	3' - 0"	7' - 0"	0' - 1 3/4"	2A	SH-3D	WOOD	STAIN	HM	PAINT	-	-
002	LEVEL 02	2107E	3' - 0"	7' - 0"	0' - 1 3/4"	1A	SH-3D	WOOD	STAIN	HM	PAINT	-	-
002	LEVEL 02	2228	3' - 0"	7' - 0"	0' - 1 3/4"	2A	SH-3D	WOOD	STAIN	HM	PAINT	-	-
002	LEVEL 03	3222	3' - 0"	7' - 0"	0' - 1 3/4"	2A	SH-3D	WOOD	STAIN	HM	PAINT	-	-
002	LEVEL 04	4222	3' - 0"	7' - 0"	0' - 1 3/4"	2A	SH-3D	WOOD	STAIN	HM	PAINT	-	-
002	LEVEL 05	5222	3' - 0"	7' - 0"	0' - 1 3/4"	2A	SH-3D	WOOD	STAIN	HM	PAINT	-	-
002	LEVEL 06	6209	3' - 0"	7' - 0"	0' - 1 3/4"	2A	SH-3D	WOOD	STAIN	HM	PAINT	-	-
002	LEVEL 07	7205	3' - 0"	7' - 0"	0' - 1 3/4"	2A	SH-3D	WOOD	STAIN	HM	PAINT	-	-
002	LEVEL 08	8141	3' - 0"	7' - 0"	0' - 1 3/4"	2A	SH-3D	WOOD	STAIN	HM	PAINT	-	-
003	LEVEL 01	105A	3' - 0"	7' - 0"	0' - 1 3/4"	2A	SH-3D	WOOD	STAIN	HM	PAINT	-	-
003	LEVEL 02	206	3' - 0"	8' - 0"	0' - 1 3/4"	2A	SH-3D	WOOD	STAIN	HM	PAINT	-	-
004	LEVEL 01	110	3' - 0"	7' - 0"	0' - 1 3/4"	2A	SH-3D	WOOD	STAIN	HM	PAINT	-	-
004	LEVEL 02	210A	3' - 0"	7' - 0"	0' - 1 3/4"	2A	SH-3D	WOOD	STAIN	HM	PAINT	-	-
005	LEVEL 01	C-103	3' - 0"	7' - 0"	0' - 1 3/4"	2A	SH-3D	WOOD	STAIN	HM	PAINT	-	-
005	LEVEL 02	C-244	3' - 0"	7' - 0"	0' - 1 3/4"	2A	SH-3D	WOOD	STAIN	HM	PAINT	-	-
005	LEVEL 03	C-314	3' - 0"	8' - 0"	0' - 1 3/4"	2A	SH-3D	WOOD	STAIN	HM	PAINT	-	-
006	LEVEL 01	128	3' - 0"	8' - 0"	0' - 1 3/4"	2A	SH-3D	WOOD	STAIN	HM	PAINT	-	-
006	LEVEL 02	222	3' - 0"	8' - 0"	0' - 1 3/4"	2A	SH-3D	WOOD	STAIN	HM	PAINT	-	-
006	LEVEL 02	223	3' - 0"	7' - 0"	0' - 1 3/4"	1A	SH-3D	WOOD	STAIN	HM	PAINT	-	-
011A	LEVEL 01	113	3' - 0"	7' - 0"	0' - 1 3/4"	2A	SH-3D	WOOD	STAIN	HM	PAINT	-	-
014A	LEVEL 01	102	3' - 0"	7' - 0"	0' - 1 3/4"	2A	SH-3D	WOOD	STAIN	HM	PAINT	-	-
015	LEVEL 01	128	3' - 0"	8' - 0"	0' - 1 3/4"	2A	SH-3D	WOOD	STAIN	HM	PAINT	-	-
015A	LEVEL 01	112	3' - 0"	7' - 0"	0' - 1 3/4"	2A	SH-3D	WOOD	STAIN	HM	PAINT	-	-
024	LEVEL 01	A-1A	3' - 0"	8' - 0"	0' - 1 3/4"	2A	SH-3D	WOOD	STAIN	HM	PAINT	-	-
027-034	LEVEL 01	159	3' - 0"	8' - 0"	0' - 1 3/4"	2A	SH-3D	WOOD	STAIN	HM	PAINT	-	-
035	LEVEL 00	B18	3' - 0"	7' - 0"	0' - 1 3/4"	2A	SH-3D	WOOD	STAIN	HM	PAINT	-	-
035	LEVEL 01	115	3' - 0"	7' - 0"	0' - 1 3/4"	2A	SH-3D	WOOD	STAIN	HM	PAINT	-	-
035A	LEVEL 01	124A	3' - 0"	7' - 0"	0' - 1 3/4"	2A	SH-3D	WOOD	STAIN	HM	PAINT	-	-
035A	LEVEL 02	225A	3' - 0"	7' - 0"	0' - 1 3/4"	2A	SH-3D	WOOD	STAIN	HM	PAINT	-	-
036	LEVEL 01	105	3' - 0"	8' - 0"	0' - 1 3/4"	2A	SH-3D	WOOD	STAIN	HM	PAINT	-	-
036A	LEVEL 01	114	3' - 0"	7' - 0"	0' - 1 3/4"	2A	SH-3D	WOOD	STAIN	HM	PAINT	-	-

DOOR SCHEDULE - DATA CENTER

BLDG #	LEVEL	DOOR NUMBER	DOOR SIZE WIDTH	DOOR SIZE HT.	DOOR SIZE THK	Door Type	HW	DOOR MAT	DOOR FIN	DOOR FRAME MAT	DOOR FRAME FIN	FIRE RATING	COMMENTS
041	LEVEL 01	104a	6' - 0"	8' - 0"	0' - 1 3/4"	5A	3E	HM	PAINT	HM*	PAINT	-	-
041	LEVEL 01	104b	6' - 0"	8' - 0"	0' - 1 3/4"	4A	3E	HM	PAINT	HM*	PAINT	45 MIN	-
041	LEVEL 01	105	3' - 0"	8' - 0"	0' - 1 3/4"	2A	SH-3D	WOOD	STAIN	HM	PAINT	-	-
041	LEVEL 01	106	3' - 0"	8' - 0"	0' - 1 3/4"	2A	SH-3D	WOOD	STAIN	HM	PAINT	45 MIN	-
041	LEVEL 01	107	3' - 0"	8' - 0"	0' - 1 3/4"	2A	SH-3D	WOOD	STAIN	HM	PAINT	-	-
041	LEVEL 01	108	6' - 0"	8' - 0"	0' - 1 3/4"	4A	3E	WOOD	STAIN	HM	PAINT	-	-
041	LEVEL 01	109	2' - 10"	8' - 0"	0' - 1 3/4"	2A	SH-3D	WOOD	STAIN	HM	PAINT	45 MIN	-
041	LEVEL 01	110	3' - 0"	8' - 0"	0' - 1 3/4"	2A	SH-3D	WOOD	STAIN	HM	PAINT	45 MIN	-
041	LEVEL 01	111	3' - 0"	8' - 0"	0' - 1 3/4"	2A	SH-3D	WOOD	STAIN	HM	PAINT	-	-
041	LEVEL 01	113	3' - 8"	7' - 0"	0' - 1 3/4"	2A	SH-3D	HM	PAINT	HM*	PAINT	45 MIN	-
041	LEVEL 01	114a	6' - 0"	8' - 0"	0' - 1 3/4"	4A	3E	HM	PAINT	HM*	PAINT	45 MIN	BLAST RATED
041	LEVEL 01	114b	6' - 0"	8' - 0"	0' - 1 3/4"	4A	3E	HM	PAINT	HM*	PAINT	45 MIN	BLAST RATED
042	LEVEL 01	121a	8' - 0"	8' - 0"	0' - 1 3/4"	5A	3E	HM	PAINT	HM*	PAINT	3 HR	BLAST RATED
042	LEVEL 01	121b	6' - 0"	8' - 0"	0' - 1 3/4"	5A	3E	HM	PAINT	HM*	PAINT	3 HR	BLAST RATED
042	LEVEL 01	122	8' - 0"	8' - 0"	0' - 1 3/4"	5A	3E	HM	PAINT	HM*	PAINT	3 HR	BLAST RATED

* ALL EXTERIOR ENTRY DOORS AND FRAMES SHALL BE A MINIMUM OF 14GA HOLLOW METAL.

GENERAL NOTES:

- ALL FIRE RATED DOORS SHALL BE FINISHED TO MATCH EXISTING FACILITY STANDARDS AND CONFIRMED WITH COR PRIOR TO INSTALLATION.

LOUVER SCHEDULE

BLDG #	LEVEL	LOUVER NUMBER	WIDTH	HEIGHT	SILL HEIGHT	QUANTITY
042	LEVEL 01	L-01	8' - 0"	4' - 0"		1
042	LEVEL 01	L-02	8' - 0"	4' - 0"		1

Revisions: Date:

CONSULTANT/ DISCIPLINE

DISCIPLINE:

ARCHITECT/ ENGINEER OF RECORD

A/E:
SPEES DESIGN BUILD
23830 PACIFIC HIGHWAY S. SUITE 300
KENT, WA 98032

STAMP

10000 REGISTERED ARCHITECT JAMES M. KING STATE OF WASHINGTON

Office of Construction and Facilities Management

VA U.S. Department of Veterans Affairs

Drawing Title: DOOR SCHEDULE & LOUVER SCHEDULE

Approved:

Phase: 100% CONSTRUCTION DOCUMENTS

Project Title: EHRM INFRASTRUCTURE UPGRADES - WEST HAVEN

Location: VA CT WEST HAVEN, 950 CAMPBELL AVENUE, WEST HAVEN, CT 06516

Issue Date: 04/20/2026 | Checked: JS/JRS | Drawn: JRS/RB

Project Number: 689-22-700

Building Number:

Drawing Number: A-601

ROOM FINISH SCHEDULE

BLDG #	LEVEL	ROOM NO.	ROOM NAME	FLOOR MAT	FLOOR FIN	BASE MAT	BASE HT	WALLS NORTH MAT	WALLS NORTH FIN	WALLS EAST MAT	WALLS EAST FIN	WALLS SOUTH MAT	WALLS SOUTH FIN	WALLS WEST MAT	WALLS WEST FIN	CLG	COMMENTS
001	LEVEL 0SG	SG105	ADP	-	-	TME	TME	-	-	-	-	GWB	P-01	-	-	-	
001	LEVEL 0SG	SG105A	VESTIBULE	-	-	TME	TME	-	-	GWB	P-01	-	-	-	-	-	
001	LEVEL 0SG	SG171	TR	EXP	AST	RB-01	4"	-	P-00 - P-02	GWB	P-00 - P-02	-	P-00 - P-02	GWB	P-00 - P-02	EXP	
001	LEVEL 0SG	SG172	OFFICE	-	-	TME	TME	-	-	-	-	-	-	GWB	P-01	-	
001	LEVEL 0SG	SGC1-01	CORRIDOR	-	-	EXST	EXST	-	P-01	-	-	-	-	-	-	-	
001	LEVEL 0SG	SGC4-01	CORRIDOR	-	-	EXST	EXST	-	P-01	-	-	-	-	-	-	-	
001	LEVEL 0SG	SG105B	TR	EXP	AST	RB-01	4"	GWB	P-02	-	P-00 - P-02	-	P-00 - P-02	GWB	P-00 - P-02	EXP	
001	LEVEL 0SG	SG170	OFFICE	-	-	TME	TME	-	-	GWB	P-01	-	-	GWB	P-01	-	
001	LEVEL 0SG	SG170A	OFFICE	-	-	TME	TME	-	-	GWB	P-01	-	P-01	-	-	-	
001	LEVEL 0G	G108	TR	EXP	AST	RB-01	6"	-	P-00 - P-02	-	P-00 - P-02	-	P-00 - P-02	-	P-00 - P-02	EXP	
001	LEVEL 0G	G191	OFFICE	-	-	TME	TME	-	-	-	-	-	-	GWB	P-01	-	
001	LEVEL 0G	G192	TR	EXP	AST	RB-01	4"	-	P-02	GWB	P-00 - P-02	GWB	P-00 - P-02	-	P-00 - P-02	EXP	
001	LEVEL 0G	G192A	OFFICE	-	-	TME	TME	-	P-01	GWB	P-01	GWB	P-01	GWB	P-01	TME	
001	LEVEL 0G	G192B	OFFICE	-	-	TME	TME	GWB	P-01	-	-	-	-	GWB	P-01	TME	
001	LEVEL 0G	G192C	LOCKER	-	-	TME	TME	GWB	P-01	GWB	P-01	-	-	-	-	-	
001	LEVEL 0G	G275	MAIN KITCHEN	-	-	TME	TME	-	-	-	-	-	-	GWB	P-01	-	
001	LEVEL 0G	G277	TR	EXP	AST	RB-01	6"	-	P-00 - P-02	GWB	P-00 - P-02	GWB	P-02	-	P-00 - P-02	EXP	
001	LEVEL 0G	GC1-01	CORRIDOR	-	-	EXST	EXST	-	-	-	-	-	P-01	-	-	-	
001	LEVEL 0G	GC3-01	CORRIDOR	-	-	EXST	EXST	-	P-01	-	-	-	-	-	-	-	
001	LEVEL 01	1C1-01	CORRIDOR	-	-	EXST	EXST	-	P-01	-	-	-	-	-	-	-	
001	LEVEL 01	1190	TR	EXP	AST	RB-01	4"	-	P-00 - P-02	-	P-00 - P-02	-	P-02	-	P-00 - P-02	EXP	
001	LEVEL 02	2C1-01	CORRIDOR	-	-	TME	TME	-	-	-	-	GWB	P-01	-	-	-	
001	LEVEL 02	2150	ANEST ON-CALL	-	-	TME	TME	-	-	-	-	-	-	GWB	P-01	-	
001	LEVEL 02	2151	TR	EXP	AST	RB-01	4"	GWB	P-00 - P-02	GWB	P-00 - P-02	-	P-02	-	P-00 - P-02	EXP	
001	LEVEL 03	3C1-01	CORRIDOR	-	-	EXST	EXST	-	-	-	-	-	P-01	-	-	-	
001	LEVEL 03	3153	HEAD NURSE	-	-	TME	TME	-	-	-	-	-	-	GWB	P-01	-	
001	LEVEL 03	3154	TR	EXP	AST	RB-01	4"	-	P-00 - P-02	GWB	P-00 - P-02	-	P-02	-	P-00 - P-02	EXP	
001	LEVEL 04	4C6-01	CORRIDOR	-	-	EXST	EXST	-	P-01	-	-	-	-	-	-	-	
001	LEVEL 04	4259	NURSE LOUNGE	-	-	TME	TME	-	-	GWB	P-01	GWB	P-01	-	-	-	
001	LEVEL 04	4259A	TR	EXP	AST	RB-01	4"	GWB	P-00 - P-02	-	P-00 - P-02	-	P-02	GWB	P-00 - P-02	EXP	
001	LEVEL 05	5C6-01	CORRIDOR	-	-	TME	TME	GWB	P-01	-	-	-	-	-	P-01	-	
001	LEVEL 05	5193	CYLINDER STORAGE	-	-	TME	TME	GWB	P-01	GWB	P-01	GWB	P-01	-	-	-	
001	LEVEL 05	5195	TR	EXP	AST	RB-01	4"	-	P-00 - P-02	-	P-02	GWB	P-00 - P-02	GWB	P-00 - P-02	EXP	
001	LEVEL 05	5196	OFFICE	-	-	TME	TME	-	-	GWB	P-01	GWB	P-01	-	-	-	
001	LEVEL 06	-	CORRIDOR	-	-	TME	TME	GWB	P-01	-	-	-	-	-	-	-	
001	LEVEL 06	6203	NURSES OFFICE	-	-	TME	TME	-	-	GWB	P-01	-	-	-	-	-	
001	LEVEL 06	6204	TR	EXP	AST	RB-01	4"	-	P-00 - P-02	GWB	P-00 - P-02	GWB	P-02	GWB	P-00 - P-02	EXP	
001	LEVEL 06	6205	NEUROLOGY-EEG	-	-	TME	TME	-	-	-	-	-	-	GWB	P-01	-	
001	LEVEL 07	7C5-01	CORRIDOR	-	-	TME	TME	GWB	P-01	-	-	-	-	-	-	-	
001	LEVEL 07	7204	TR	EXP	AST	RB-01	6"	-	P-00 - P-02	GWB	P-00 - P-02	GWB	P-00 - P-02	-	P-00 - P-02	EXP	
001	LEVEL 07	7205	PSYCHIATRIST INTERN	-	-	EXST	EXST	-	-	-	-	-	-	GWB	P-01	-	
001	LEVEL 08	8C5-01	CORRIDOR	-	-	TME	TME	-	-	-	-	GWB	P-01	-	-	-	
001	LEVEL 08	8139	TR	EXP	AST	RB-01	4"	GWB	P-00 - P-02	-	P-00 - P-02	-	P-00 - P-02	-	P-00 - P-02	EXP	
001	LEVEL 09	9C1-01	CORRIDOR	-	-	EXST	EXST	-	-	-	-	-	P-01	-	-	-	
001	LEVEL 09	9C2-01	CORRIDOR	-	-	EXST	EXST	-	-	-	-	-	P-01	-	-	-	
001	LEVEL 09	9122	DIRECTOR PSTD PGM	-	-	TME	TME	-	-	GWB	P-01	-	-	-	-	-	
001	LEVEL 09	9122A	TR	EXP	AST	RB-01	4"	-	P-02	GWB	P-00 - P-02	-	P-00 - P-02	GWB	P-00 - P-02	EXP	
001	LEVEL 09	9122B	CLOSET	-	-	TME	TME	-	P-01	-	-	-	-	GWB	P-01	-	
002	LEVEL 0G	G132	STORAGE	-	-	TME	TME	GWB	P-01	GWB	P-01	-	-	-	-	-	
002	LEVEL 0G	G132A	TR	EXP	AST	RB-01	6"	-	P-02	-	P-00 - P-02	-	P-00 - P-02	GWB	P-00 - P-02	EXP	
002	LEVEL 0G	G143	STORAGE (SHARED WITH DIALYSIS)	-	-	TME	TME	GWB	P-01	GWB	P-01	-	-	-	-	-	
002	LEVEL 0G	G143C	TR	EXP	AST	RB-01	4"	-	P-00 - P-02	-	P-00 - P-02	GWB	P-00 - P-02	GWB	P-00 - P-02	EXP	
002	LEVEL 0G	GC1-02	CORRIDOR	-	-	TME	TME	-	-	-	-	GWB	P-01	-	-	-	
002	LEVEL 0G	GC4B-02	CORRIDOR	-	-	EXST	EXST	-	-	-	-	-	P-01	-	-	-	
002	LEVEL 01	1C12A-02	CORRIDOR	-	-	EXST	EXST	-	-	-	P-01	-	-	-	-	-	
002	LEVEL 01	1238	PRIVATE OFFICE	-	-	TME	TME	GWB	P-01	GWB	P-01	-	-	-	-	-	
002	LEVEL 01	1239	TR	EXP	AST	RB-01	4"	GWB	P-00 - P-02	-	P-00 - P-02	-	P-00 - P-02	GWB	P-00 - P-02	EXP	
002	LEVEL 01	1279	DINING RM	-	-	TME	TME	-	-	-	-	-	-	GWB	P-01	-	
002	LEVEL 01	1279A	TR	EXP	AST	RB-01	6"	-	P-00 - P-02	GWB	P-00 - P-02	-	P-00 - P-02	-	P-00 - P-02	EXP	
002	LEVEL 01	1303A	OFFICE	-	-	TME	TME	GWB	P-01	-	-	-	-	-	-	-	
002	LEVEL 01	1303B	TR	EXP	AST	RB-01	4"	-	P-00 - P-02	-	P-02	GWB	P-00 - P-02	-	P-00 - P-02	EXP	
002	LEVEL 01	C130	STAFF CORRIDOR	-	-	TME	TME	-	-	-	-	GWB	P-01	-	-	-	
002	LEVEL 02	2C2A-02	CORRIDOR	-	-	TME	TME	-	-	-	-	-	-	GWB	P-01	-	
002	LEVEL 02	2C7-02	CORRIDOR	-	-	EXST	EXST	-	P-01	-	-	-	-	-	-	-	
002	LEVEL 02	2C9-02	CORRIDOR	-	-	TME	TME	-	-	-	-	-	-	GWB	P-01	-	
002	LEVEL 02	2107D	TR	EXP	AST	RB-01	4"	-	P-00 - P-02	GWB	P-00 - P-02	GWB	P-00 - P-02	-	P-00 - P-02	EXP	
002	LEVEL 02	2107E	STORAGE	-	-	TME	TME	GWB	P-01	GWB	P-01	-	-	-	-	-	
002	LEVEL 02	2228	TR	EXP	AST	RB-01	4"	-	P-00 - P-02	GWB	P-00 - P-02	-	P-00 - P-02	-	P-00 - P-02	EXP	
002	LEVEL 03	3HA1-02	CORRIDOR	-	-	TME	TME	GWB	P-01	-	-	-	-	-	-	-	
002	LEVEL 03	3HA5-02	CORRIDOR	-	-	TME	TME	GWB	P-01	-	-	-	-	-	-	-	
002	LEVEL 03	3222	TR	EXP	AST	RB-01	4"	-	P-02	-	P-00 - P-02	GWB	P-00 - P-02	-	P-00 - P-02	EXP	
002	LEVEL 04	4C1-02	CORRIDOR	-	-	TME	TME	GWB	P-01	-	-	-	-	-	-	-	
002	LEVEL 04	4222	TR	EXP	AST	RB-01	4"	-	P-00 - P-02	-	P-00 - P-02	GWB	P-00 - P-02	-	P-00 - P-02	EXP	
002	LEVEL 04	GC5-02	CORRIDOR	-	-	TME	TME	GWB	P-01	-	-	-	-	-	-	-	
002	LEVEL 05	5C5-02	CORRIDOR	-	-	TME	TME	GWB	P-01	-	-	-	-	-	-	-	
002	LEVEL 05	5222	TR	EXP	AST	RB-01	4"	-	P-02	-	P-00 - P-02	GWB	P-00 - P-02	-	P-00 - P-02	EXP	
002	LEVEL 06	6C5-02	CORRIDOR	-	-	TME	TME	GWB	P-01	-	-	-	-	-	-	-	
002	LEVEL 06	6208	TREAT AND EXAM	-	-	TME	TME	-	-	GWB	P-01	-	-	-	-	-	
002	LEVEL 06	6209	TR	EXP	AST	RB-01	4"	-	P-00 - P-02	-	P-00 - P-02	GWB	P-00 - P-02	GWB	P-00 - P-02	EXP	
002	LEVEL 07	7C1-02	CORRIDOR	-	-	TME	TME	GWB	P-01	-	-	-	-	-	-	-	
002	LEVEL 07	7C5-02	CORRIDOR	-	-	TME	TME	GWB	P-01	-	-	-	-	-	-	-	
002	LEVEL 07	7205	TR	EXP	AST	RB-01	4"	-	P-00 - P-02	-	P-00 - P-02	GWB	P-00 - P-02	-	P-00 - P-02	EXP	
002	LEVEL 08	8C4-02	CORRIDOR	-	-	TME	TME	GWB	P-01	-	-	-	-	-	-	-	
002	LEVEL 08	8141	TR	EXP	AST	RB-01	4"	-	P-02	GWB	P-00 - P-02	GWB	P-00 - P-02	-	P-00 - P-02	EXP	
002	LEVEL 08	8145	LAB	-	-	TME	TME	-	-	-	-	-	-	GWB	P-01	-	
002B	LEVEL 01	2B-107	IT/ELECTRICAL CLOSET (TE)	-	-	-	-	-	P-00 - P-02	-	-	-	-	-	-	-	
003	LEVEL 01	105A	TR	EXP	AST	RB-01	4"	-	P-00 - P-02	-	P-00 - P-02	GWB	P-02	-	P-00 - P-02	EXP	
003	LEVEL 01	105B	STORAGE	-	-	TME	TME	GWB	P-01	-	P-01	-	-	-	-	-	
003	LEVEL 02	200	LAB	-	-	TME	TME	GWB	P-01	-	-	-	-	-	-	-	
003	LEVEL 02	206	TR	EXP	AST	RB-01	4"	-	P-00 - P-02	-	P-00 - P-02	GWB	P-00 - P-02	-	P-00 - P-02	EXP	
004	LEVEL 00	19	SIGNAGE (TE)	-	-	-	-	GWB	P-01	-	-	-	P-00 - P-02	-	-	-	
004	LEVEL 00	19A	STORAGE	-	-	TME	TME	-	-	-	-	GWB	P-01	-	-	-	
004	LEVEL 01	110	TR	EXP	AST	RB-01	4"	-	P-02	-	P-00 - P-02	-	P-02	-	P-00 - P-02	EXP	
004	LEVEL 01	115	CORRIDOR	-	-	EXST	EXST	-	P-01	-	-	-	-	-	-	-	
004	LEVEL 02	210	-	-	-	TME	TME	-	-	GWB	P-01	-	-	-	-	-	
004	LEVEL 02	210A	TR	EXP	AST	RB-01	4"	-	P-00 - P-02	-	P-00 - P-02	-	P-00 - P-02	GWB	P-00 - P-02	EXP	
005	LEVEL 01	1C3-05	CORRIDOR	-	-	EXST	EXST	-	P-01	-	-	-	-	-	-	-	
005	LEVEL 01	C-103	TR	EXP	AST	RB-01	6"	-	P-00 - P-02	-	P-00 - P-02	-	P-02	-	P-00 - P-02	EXP	

ROOM FINISH SCHEDULE ABBREVIATIONS	
AST	ANTI-STATIC COATING
EXP	EXPOSED
GWB	GYPSUM WALL BOARD
RB-01	RUBBER BASE
TME	TO MATCH EXISTING
EXT	EXTERIOR
PAINT CODES	
P-00	FIRE RATED PLYWOOD
P-01	MATCH EXISTING
P-02	SW7005 PURE WHITE

Revisions:	Date:

CONSULTANT/ DISCIPLINE

DISCIPLINE:

ARCHITECT/ ENGINEER OF RECORD

A/E:
SPEES DESIGN BUILD
23830 PACIFIC HIGHWAY S. SUITE 300
KENT, WA 98032

SPEESDESIGNBUILD

STAMP

REGISTERED ARCHITECT 10000 JAMES M. KING STATE OF WASHINGTON

Office of Construction and Facilities Management

VA U.S. Department of Veterans Affairs

Drawing Title: ROOM FINISH SCHEDULES

Phase: 100% CONSTRUCTION DOCUMENTS

Project Title: EHRM INFRASTRUCTURE UPGRADES - WEST HAVEN

Project Number: 689-22-700

Building Number:

Approved:

Location: VA CT WEST HAVEN, 950 CAMPBELL AVENUE, WEST HAVEN, CT 06516

Issue Date: 04/20/2026 | Checked: JS/JRS | Drawn: JRS/RB

Drawing Number: A-601a

ROOM FINISH SCHEDULE

BLDG #	LEVEL	ROOM NO.	ROOM NAME	FLOOR MAT	FLOOR FIN	BASE MAT	BASE HT	WALLS NORTH MAT	WALLS NORTH FIN	WALLS EAST MAT	WALLS EAST FIN	WALLS SOUTH MAT	WALLS SOUTH FIN	WALLS WEST MAT	WALLS WEST FIN	CLG	COMMENTS
005	LEVEL 02	2C2A-05	CORRIDOR	-	-	TME	TME	GWB	P-01	-	-	-	-	-	-	-	
005	LEVEL 02	246	VIROLOGY STAFF LOUNGE	-	-	TME	TME	-	-	-	-	-	-	GWB	P-01	-	
005	LEVEL 02	C-244	TR	EXP	AST	RB-01	6"	-	P-02	GWB	P-00 - P-02	GWB	P-02	-	P-00 - P-02	EXP	
005	LEVEL 03	3C1A-05	CORRIDOR	-	-	TME	TME	GWB	P-01	-	-	-	-	-	-	-	
005	LEVEL 03	315	RESEARCH PSYCHOLOGIST OF COMPREHENSIVE PAIN MGMT	-	-	TME	TME	-	-	-	-	-	-	GWB	P-01	-	
005	LEVEL 03	C-314	TR	EXP	AST	RB-01	4"	-	P-02	GWB	P-00 - P-02	GWB	P-00 - P-02	-	P-00 - P-02	EXP	
006	LEVEL 01	-	CORRIDOR	-	-	TME	TME	GWB	P-01	-	-	-	-	-	-	-	
006	LEVEL 01	128	TR	EXP	AST	RB-01	4"	GWB	P-00 - P-02	-	P-00 - P-02	GWB	P-00 - P-02	-	P-00 - P-02	EXP	
006	LEVEL 01	129	OFFICE	-	-	TME	TME	-	-	-	-	GWB	P-01	-	-	-	
006	LEVEL 02	-	CORRIDOR	-	-	TME	TME	-	-	GWB	P-01	-	-	-	-	-	
006	LEVEL 02	219	OFFICE	-	-	TME	TME	-	-	-	-	-	-	GWB	P-01	-	
006	LEVEL 02	222	TR	EXP	AST	RB-01	4"	-	P-00 - P-02	GWB	P-00 - P-02	GWB	P-00 - P-02	GWB	P-02	EXP	
006	LEVEL 02	223	STORAGE	-	-	TME	TME	GWB	P-01	GWB	P-01	-	-	-	-	-	
011	LEVEL 02	202	PROPERTY MGMT SVC (TE)	-	-	-	-	-	-	-	-	-	P-00 - P-02	-	-	-	
011A	LEVEL 01	-	CONFERENCE	-	-	TME	TME	-	-	GWB	P-01	-	-	-	-	-	
011A	LEVEL 01	100	CORRIDOR	-	-	TME	TME	GWB	P-01	-	-	-	-	-	-	-	
011A	LEVEL 01	113	TR	EXP	AST	RB-01	4"	-	P-00 - P-02	-	P-00 - P-02	GWB	P-00 - P-02	GWB	P-00 - P-02	EXP	
012	LEVEL 02	202	OFFICE (TE)	-	-	-	-	-	-	-	-	-	P-00 - P-02	-	-	-	
012A	LEVEL 01	119	DATA (TE)	-	-	-	-	-	P-00 - P-02	-	-	-	-	-	-	-	
014A	LEVEL 01	102	TR	EXP	AST	RB-01	4"	-	P-00 - P-02	-	P-00 - P-02	-	P-00 - P-02	-	P-00 - P-02	EXP	
014A	LEVEL 01	117	CORRIDOR	-	-	EXST	EXST	-	-	-	-	-	-	-	P-01	-	
015	LEVEL 01	-	ELEVATOR LOBBY	-	-	TME	TME	-	-	-	-	-	-	GWB	P-01	-	
015	LEVEL 01	128	TR	EXP	AST	RB-01	4"	-	P-00 - P-02	GWB	P-00 - P-02	GWB	P-00 - P-02	-	P-00 - P-02	EXP	
015A	LEVEL 01	-	ROOM	-	-	EXST	EXST	-	P-01	-	-	-	-	-	-	-	
015A	LEVEL 01	112	TR	EXP	AST	RB-01	4"	-	P-00 - P-02	GWB	P-00 - P-02	GWB	P-00 - P-02	-	P-00 - P-02	EXP	
015A	LEVEL 01	113	CONFERENCE ROOM	-	-	TME	TME	GWB	P-01	-	-	-	-	GWB	P-01	-	
021	LEVEL 01	2A	DATA CLOSET (TE)	-	-	RB-01	6"	-	P-00 - P-02	-	-	-	-	-	-	-	
022	LEVEL 01	13	REPAIR SHOP-SUPV OF GROUNDS (TE)	-	-	-	-	-	P-00 - P-02	-	-	-	-	-	-	-	
024	LEVEL 01	A-1	WARE HOUSE	-	-	TME	TME	-	-	-	-	GWB	P-01	GWB	P-01	-	
024	LEVEL 01	A-1A	TR	EXP	AST	RB-01	4"	GWB	P-00 - P-02	GWB	P-00 - P-02	GWB	P-00 - P-02	-	P-00 - P-02	EXP	
024	LEVEL 01	A-2	SYRINGE STORAGE	-	-	TME	TME	GWB	P-01	-	-	-	-	-	-	-	
027-034	LEVEL 01	113	CORRIDOR H	-	-	EXST	EXST	-	-	-	-	-	-	GWB	P-01	-	
027-034	LEVEL 01	149	STORAGE	-	TME	TME	TME	-	-	-	-	GWB	P-01	-	-	TME	
027-034	LEVEL 01	159	TR	EXP	AST	RB-01	6"	-	P-00 - P-02	-	P-00 - P-02	-	P-00 - P-02	GWB	P-02	EXP	
027-034	LEVEL 01	163B	CORRIDOR	-	-	TME	TME	-	-	GWB	P-01	-	-	-	-	-	
035	LEVEL 00	B18	TR	EXP	AST	RB-01	6"	-	P-02	-	P-00 - P-02	-	P-00 - P-02	-	P-00 - P-02	EXP	
035	LEVEL 00	B24	CORRIDOR	-	-	EXST	EXST	-	-	-	-	-	P-01	-	-	-	
035	LEVEL 01	-	CORRIDOR	-	-	EXST	EXST	-	P-01	-	-	-	-	-	-	-	
035	LEVEL 01	115	TR	EXP	AST	RB-01	4"	-	P-00 - P-02	-	P-00 - P-02	-	P-00 - P-02	-	P-00 - P-02	EXP	
035A	LEVEL 01	-	CORRIDOR	-	-	EXST	EXST	-	P-01	-	-	-	-	-	-	-	
035A	LEVEL 01	124	C.E.R.C. PROJECT RESEARCH STAFF	-	-	TME	TME	-	-	GWB	P-01	-	-	-	-	-	
035A	LEVEL 01	124A	TR	EXP	AST	RB-01	4"	-	P-00 - P-02	-	P-00 - P-02	-	P-00 - P-02	GWB	P-00 - P-02	EXP	
035A	LEVEL 02	-	CORRIDOR	-	-	EXST	EXST	-	P-01	-	-	-	-	-	-	-	
035A	LEVEL 02	225	RESEARCH ASSISTANTS	-	-	TME	TME	-	-	GWB	P-01	-	-	-	-	-	
035A	LEVEL 02	225A	TR	EXP	AST	RB-01	4"	-	P-00 - P-02	-	P-00 - P-02	-	P-00 - P-02	GWB	P-00 - P-02	EXP	
036	LEVEL 01	-	CORRIDOR	-	-	EXST	EXST	-	-	-	P-01	-	-	-	-	-	
036	LEVEL 01	105	TR	EXP	AST	RB-01	4"	-	P-00 - P-02	-	P-02	-	P-00 - P-02	-	P-00 - P-02	EXP	
36A	LEVEL 01	117	CORRIDOR	-	-	TME	TME	-	-	-	-	GWB	P-01	-	-	-	
036A	LEVEL 01	112	PRINTER/FAX	-	-	EXST	EXST	-	-	-	-	-	P-01	-	-	-	
036A	LEVEL 01	114	IT / ELECT (TE)	-	-	-	-	GWB	P-02	-	-	-	-	-	P-00 - P-02	-	

ROOM FINISH SCHEDULE ABBREVIATIONS	
AST	ANTI-STATIC COATING
EXP	EXPOSED
GWB	GYPSUM WALL BOARD
RB-01	RUBBER BASE
TME	TO MATCH EXISTING
EXT	EXTERIOR
PAINT CODES	
P-00	FIRE RATED PLYWOOD
P-01	MATCH EXISTING
P-02	SW7005 PURE WHITE

ROOM FINISH SCHEDULE - DATA CENTER

BLDG #	LEVEL	ROOM NO.	ROOM NAME	FLOOR MAT	FLOOR FIN	BASE MAT	BASE HT	WALLS NORTH MAT	WALLS NORTH FIN	WALLS EAST MAT	WALLS EAST FIN	WALLS SOUTH MAT	WALLS SOUTH FIN	WALLS WEST MAT	WALLS WEST FIN	CLG	COMMENTS
041	LEVEL 01	104	CORRIDOR	EXP	-	N/A	-	-	P-02	-	P-02	-	P-02	-	P-02	EXP	
041	LEVEL 01	105	ENTRANCE ROOM #1	EXP	AST	N/A	-	-	P-02	-	P-02	-	P-02	-	P-02	EXP	
041	LEVEL 01	106	SECURE STORAGE	EXP	-	N/A	-	-	P-02	-	P-02	-	P-02	-	P-02	EXP	
041	LEVEL 01	107	ENTRANCE ROOM #2	EXP	AST	N/A	-	-	P-02	-	P-02	-	P-02	-	P-02	EXP	
041	LEVEL 01	108	MECH	EXP	-	N/A	-	-	P-02	-	P-02	-	P-02	-	P-02	EXP	
041	LEVEL 01	109	ELEC	EXP	-	N/A	-	-	P-02	-	P-02	-	P-02	-	P-02	EXP	
041	LEVEL 01	110	FIRE RISER	EXP	-	N/A	-	-	P-02	-	P-02	-	P-02	-	P-02	EXP	
041	LEVEL 01	111	ROOF ACCESS	EXP	-	N/A	-	-	P-02	-	P-02	-	P-02	-	P-02	EXP	
041	LEVEL 01	112	UNPACKING/ PACKING	EXP	-	N/A	-	-	-	-	P-02	-	P-02	-	P-02	EXP	
041	LEVEL 01	113	VEST	EXP	-	N/A	-	-	P-02	-	P-02	-	P-02	-	P-02	EXP	
041	LEVEL 01	114	DATA CENTER	EXP	AST	RB	4"	-	P-02	-	P-02	-	P-02	-	P-02	EXP	
042	LEVEL 01	121	GENERATOR ENCLOSURE	EXP	-	N/A	-	-	P-02	-	P-02	-	P-02	-	P-02	EXP	
042	LEVEL 01	122	FUEL YARD	EXP	-	N/A	-	-	P-02	-	P-02	-	P-02	-	P-02	-	

Revisions:	Date:

CONSULTANT/ DISCIPLINE

DISCIPLINE:

ARCHITECT/ ENGINEER OF RECORD

A/E:
SPEES DESIGN BUILD
23830 PACIFIC HIGHWAY S. SUITE 300
KENT, WA 98032

SPEESDESIGNBUILD

STAMP

REGISTERED ARCHITECT 10000 JAMES M. KING STATE OF WASHINGTON

Office of Construction and Facilities Management

VA U.S. Department of Veterans Affairs

Drawing Title: ROOM FINISH SCHEDULES

Approved:

Phase: 100% CONSTRUCTION DOCUMENTS

Project Title: EHRM INFRASTRUCTURE UPGRADES - WEST HAVEN

Location: VA CT WEST HAVEN, 950 CAMPBELL AVENUE, WEST HAVEN, CT 06516

Issue Date: 04/20/2026 | Checked: JS/JRS | Drawn: JRS/RB

Project Number: 689-22-700

Building Number:

Drawing Number: A-601b

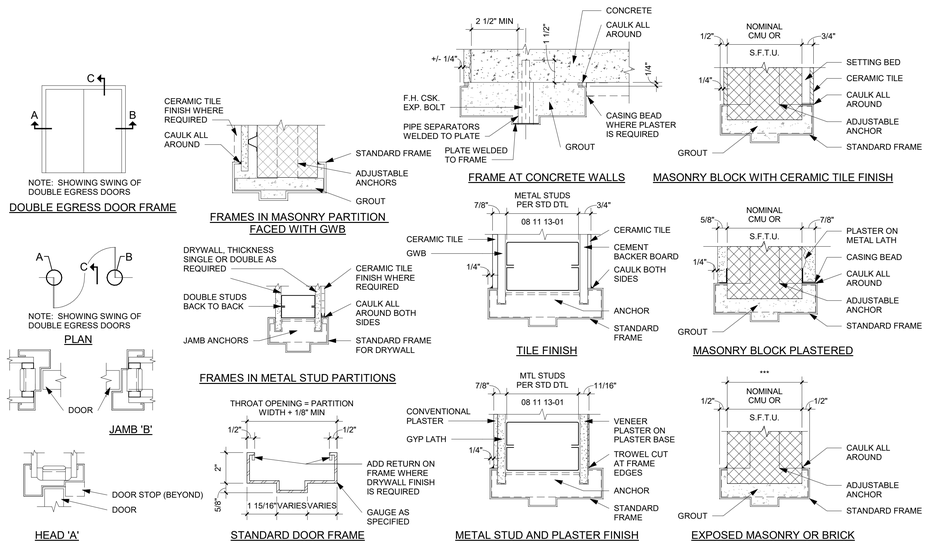

1 DOOR FRAME - DETAILS

NTS

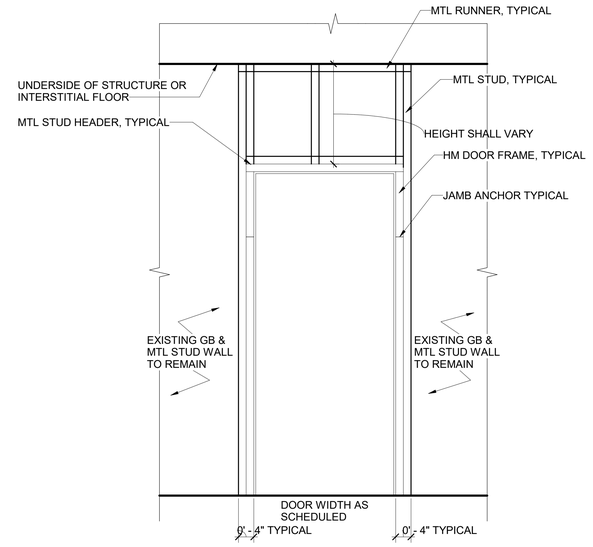

2 DOOR FRAME - DETAIL

3/4" = 1'-0"

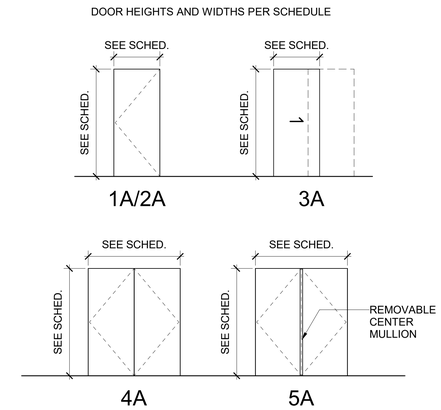

4 DOOR TYPES

1" = NTS

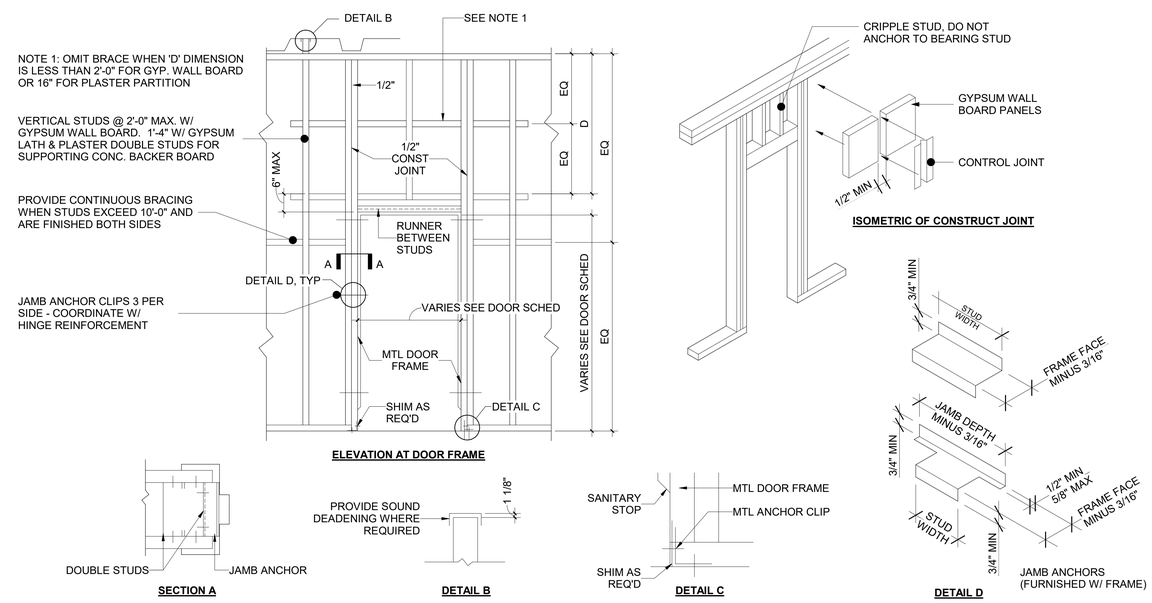

3 PARTITION FRAMING AT DOORS

NTS

GENERAL NOTES

1. SEE SPECIFICATION SECTION 08 71 00 - DOOR HARDWARE FOR HW SETS.
2. CONTRACTOR TO VERIFY DOOR SIZE AND WALL THICKNESS PRIOR TO ORDERING DOORS AND FRAMES. ALL DOOR FRAMES ARE TO HAVE A POSITIVE RELIEF TO EXISTING WALLS.
3. DATA CENTER AND GENERATOR ENCLOSURE EXTERIOR DOORS, FRAMES, AND ANCHORAGE SHALL BE IN ACCORDANCE WITH SPEC 08 11 13.

Revisions:	Date:

CONSULTANT/ DISCIPLINE

DISCIPLINE:

ARCHITECT/ ENGINEER OF RECORD

A/E:
SPEES DESIGN BUILD
23830 PACIFIC HIGHWAY S. SUITE 300
KENT, WA 98032

SPEESDESIGNBUILD

STAMP

10000 REGISTERED ARCHITECT JAMES M. KING STATE OF WASHINGTON

Office of Construction and Facilities Management

VA U.S. Department of Veterans Affairs

Drawing Title: DOOR TYPES & DETAILS	Phase: 100% CONSTRUCTION DOCUMENTS	Project Title: EHRM INFRASTRUCTURE UPGRADES - WEST HAVEN	Project Number: 689-22-700
Approved:		Location: VA CT WEST HAVEN, 950 CAMPBELL AVENUE, WEST HAVEN, CT 06516	Building Number:
		Issue Date: 04/20/2026 · Checked: JS/JRS · Drawn: RB	Drawing Number: A-602

VA FORM 08 - 6231

Autodesk Docs://689-22-700 VA CT West Haven EHRM IUVAWH_GEN SHEETS_SDB.rvt

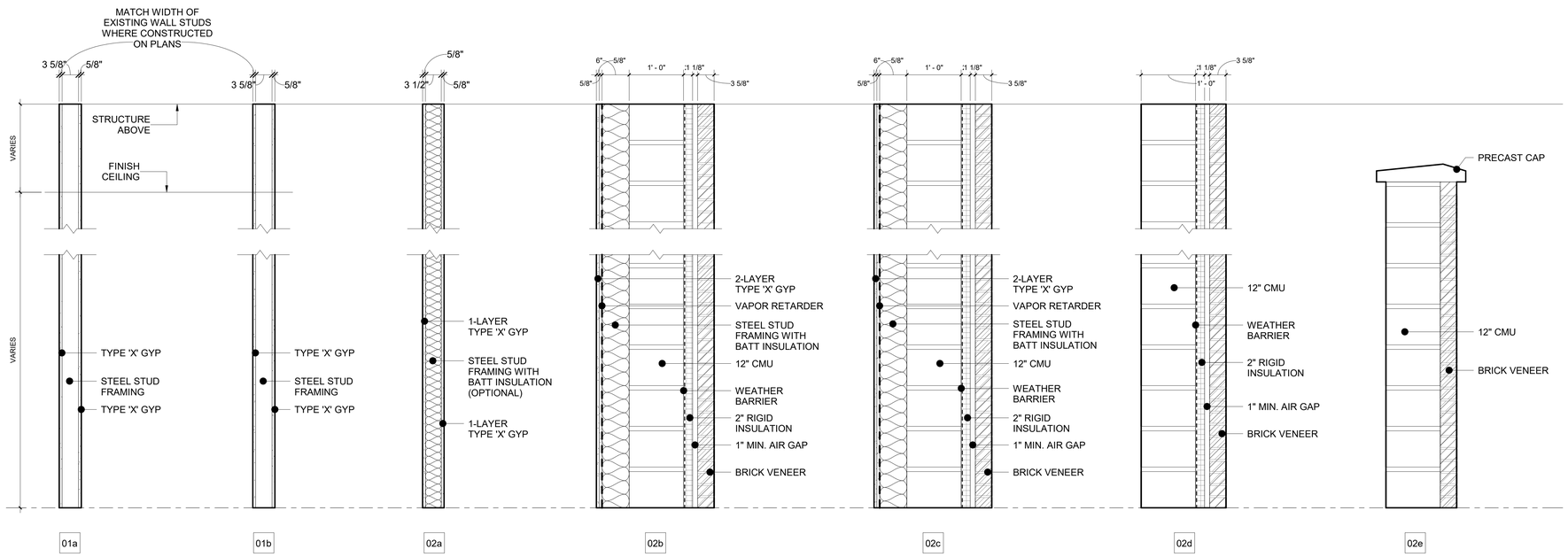

1 WALL TYPES

1" = 1'-0"

NOTE:

1. PERFORMANCE OF THE SELECTED SYSTEM MUST BE DEMONSTRATED WITH GLAZING HAZARD CALCULATIONS OR BLAST TEST DATA, WHICH MUST BE OF SIMILAR SIZED GLASS PANELS AND BLAST LOAD INTENSITY, IN ACCORDANCE WITH ASTM F1642.
2. SEAL ANY GAPS AROUND THE WINDOW AND FRAME. WINDOW SHALL BE RENDERED INOPERABLE PRIOR TO INSTALLING FRAMING AND GYP.

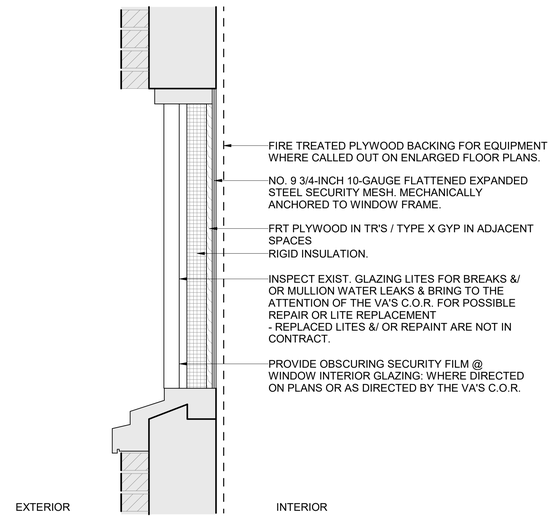

2 WINDOW SECURITY - DETAIL

NTS

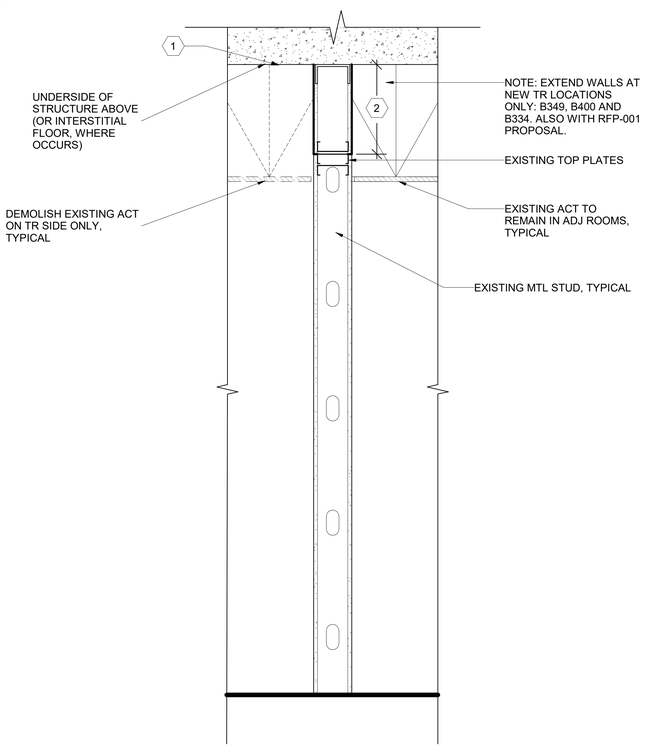

3 PARTIAL HEIGHT WALL/CEILING - DETAIL

NTS

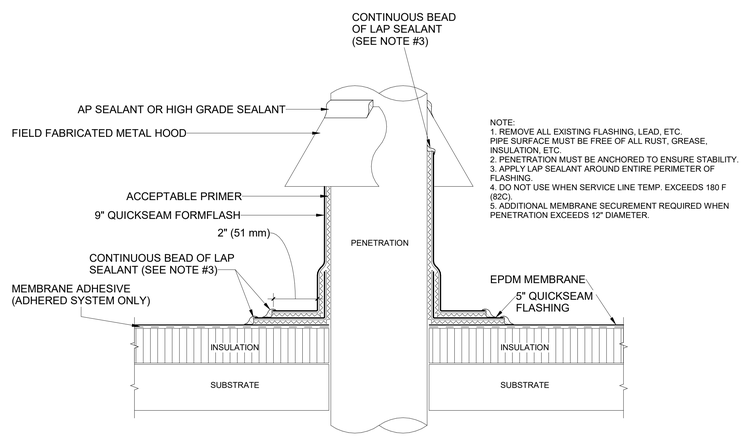

4 EPDM ROOF - PENETRATION

NTS

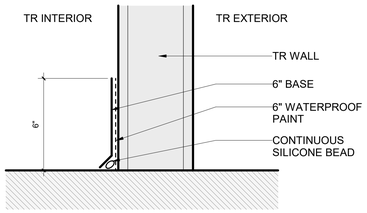

5 6" BASE DETAIL

3" = 1'-0"

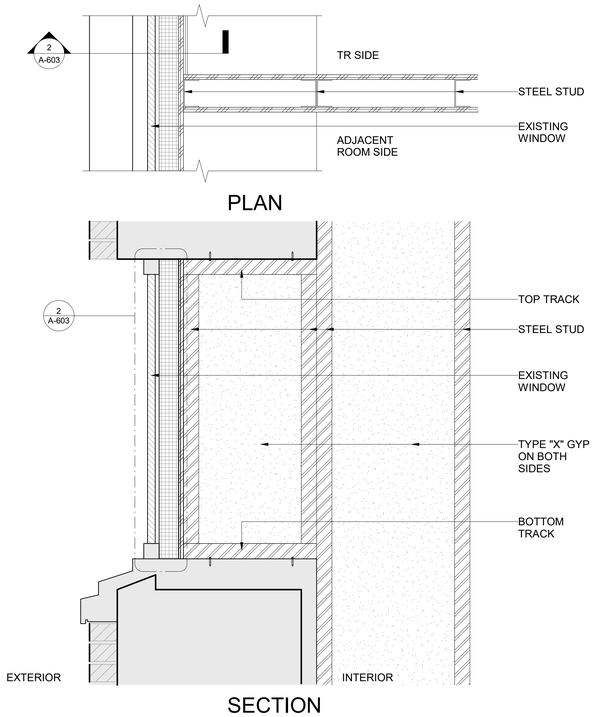

6 WALL TO WINDOW - DETAIL

NTS

GENERAL NOTES

1. SEE MECH SHEETS FOR COORDINATION ON ROOF PATCHES.

KEYNOTES

1. CONTRACTOR HAS OPTION TO PATCH HOLES & TAPE JOINTS ON UNDERSIDE OF EXISTING GYPSUM PANELS @ UNDERSIDE OF INTERSTITIAL FLOOR OR ADD NEW LAYER OF 1/2" GYPSUM BOARD THAT IS TAPED & FINISHED.

2. INSTALL GYP BOARD EACH SIDE OF EXISTING MTL STUDS FROM EDGE OF EXISTING GYP TO STRUCTURE ABOVE. APPLY FIRE TAPE ON EDGES, SEAMS AND HOLES OF GYP BOARD ON SURFACES NOT ON ABOVE SUSPENDED CEILING. PROVIDE LEVEL 4 FINISH WHERE WALL SURFACES ARE EXPOSED TO VIEW.

Revisions:	Date:

CONSULTANT/ DISCIPLINE

DISCIPLINE:

ARCHITECT/ ENGINEER OF RECORD

A/E:
SPEES DESIGN BUILD
23830 PACIFIC HIGHWAY S. SUITE 300
KENT, WA 98032

SPEESDESIGNBUILD

STAMP

REGISTERED ARCHITECT 10000 JAMES M. KING STATE OF WASHINGTON

Office of Construction and Facilities Management

VA U.S. Department of Veterans Affairs

Drawing Title	Phase	Project Title	Project Number
WALL TYPES AND OTHER DETAILS	100% CONSTRUCTION DOCUMENTS	EHRM INFRASTRUCTURE UPGRADES - WEST HAVEN	689-22-700
Approved:		Location: VA CT WEST HAVEN, 950 CAMPBELL AVENUE, WEST HAVEN, CT 06516	Building Number
		Issue Date: 04/20/2026 · Checked: JS/JRS · Drawn: JRS	Drawing Number: A-603

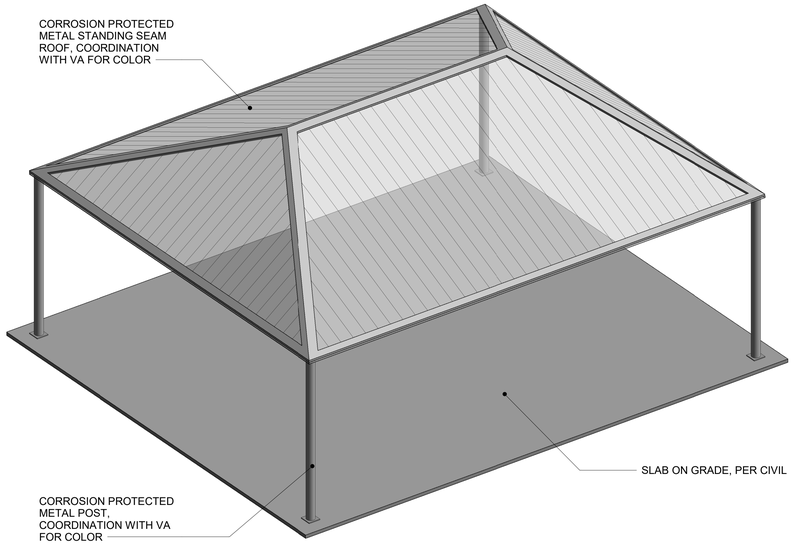

1 PERSPECTIVE

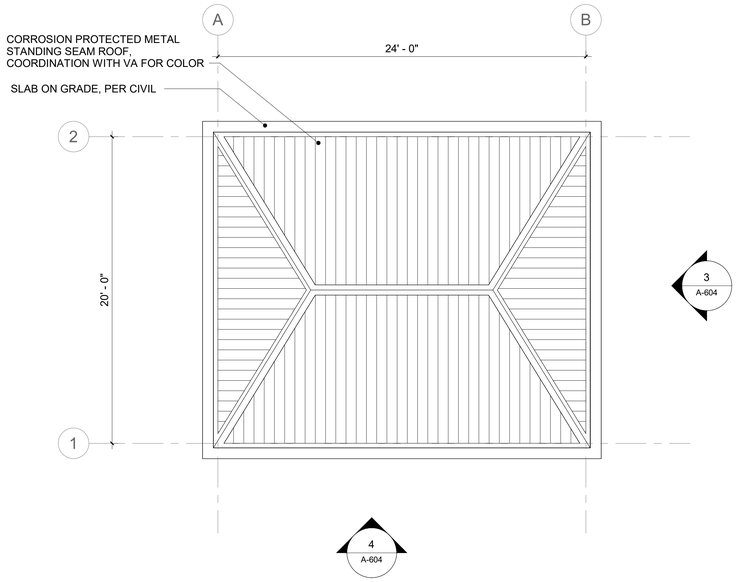

2 ROOF PLAN

1/4" = 1'-0"

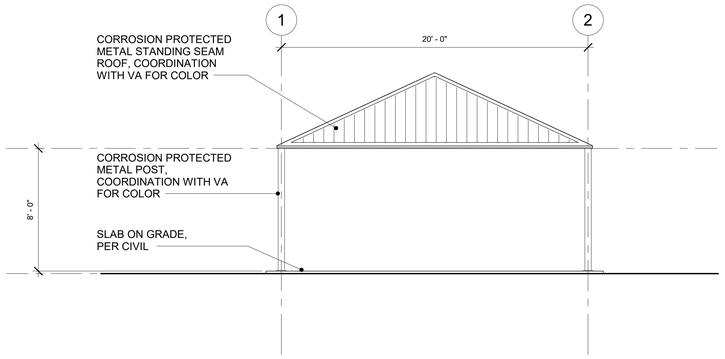

3 ELEVATION A

1/4" = 1'-0"

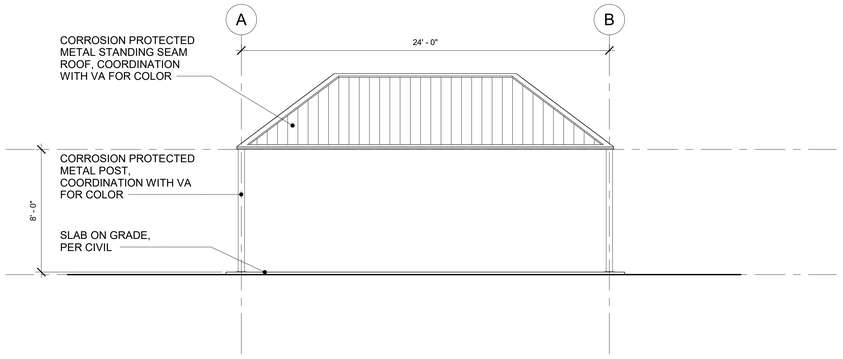

4 ELEVATION B

1/4" = 1'-0"

KEY PLAN

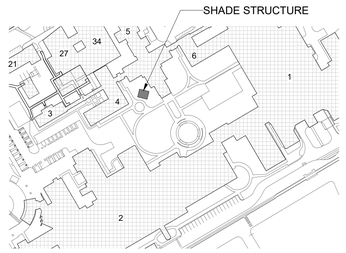

Revisions:	Date:

CONSULTANT/ DISCIPLINE

DISCIPLINE:

ARCHITECT/ ENGINEER OF RECORD

A/E:
SPEES DESIGN BUILD
23830 PACIFIC HIGHWAY S. SUITE 300
KENT, WA 98032

SPEESDESIGNBUILD

STAMP

REGISTERED ARCHITECT 10000 JAMES M. KING STATE OF WASHINGTON

Office of Construction and Facilities Management

VA U.S. Department of Veterans Affairs

Drawing Title: SHADE STRUCTURE

Approved:

Phase: 100% CONSTRUCTION DOCUMENTS

Project Title: EHRM INFRASTRUCTURE UPGRADES - WEST HAVEN

Location: VA CT WEST HAVEN, 950 CAMPBELL AVENUE, WEST HAVEN, CT 06516

Issue Date: 04/20/2026 | Checked: JS/JRS | Drawn: ME

Project Number: 689-22-700

Building Number:

Drawing Number: A-604

VA FORM 08 - 6231

08/05/2026 7:14:55 am

Autodesk Docs://689-22-700 VA CT West Haven EHRM IU/VAWH_GEN SHEETS_SDB.rvt

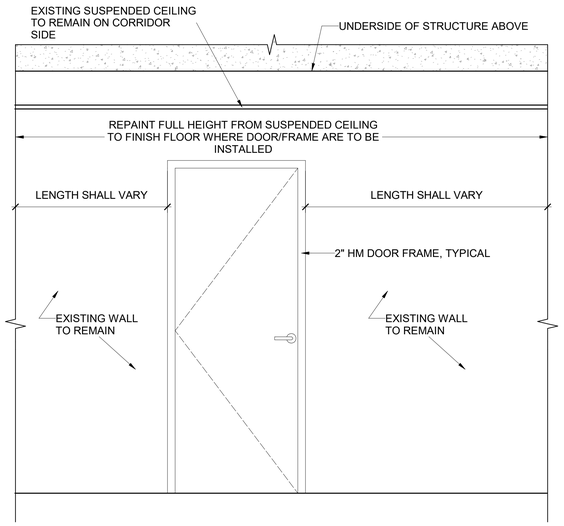

1 EXTERIOR TR ELEVATION - TYP DOOR ELEVATION
3/4" = 1'-0"

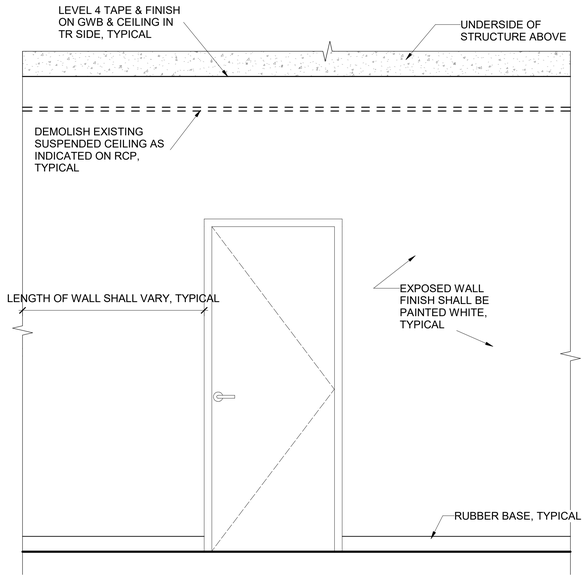

2 INTERIOR TR ENTRANCE - TYP INTERIOR ELEVATION
3/4" = 1'-0"

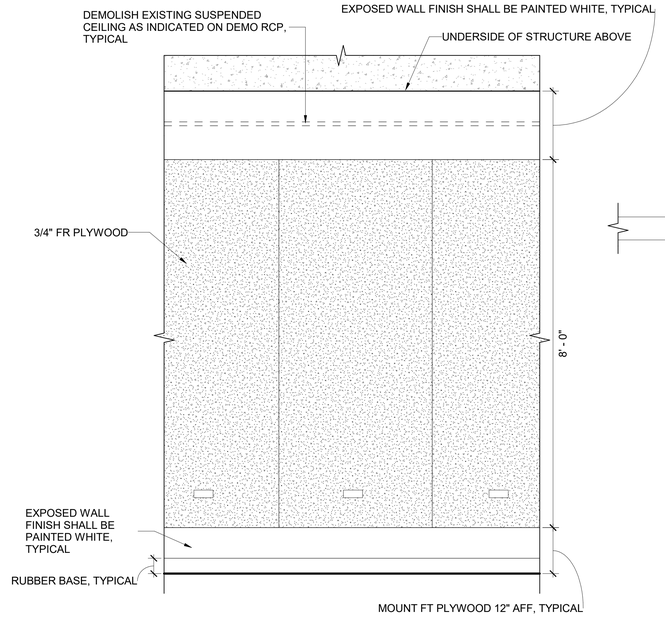

3 INTERIOR ELEVATION - TYP TR PLYWOOD
3/4" = 1'-0"

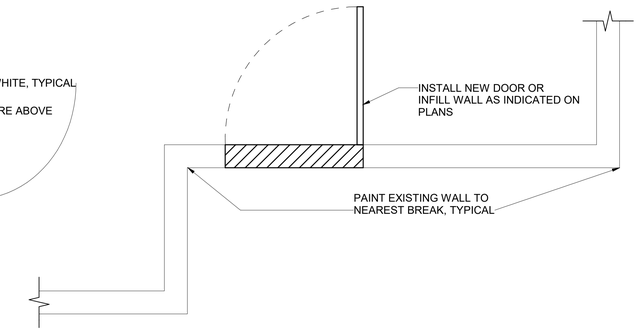

4 TYP TR WALL - PLAN VIEW
3/4" = 1'-0"

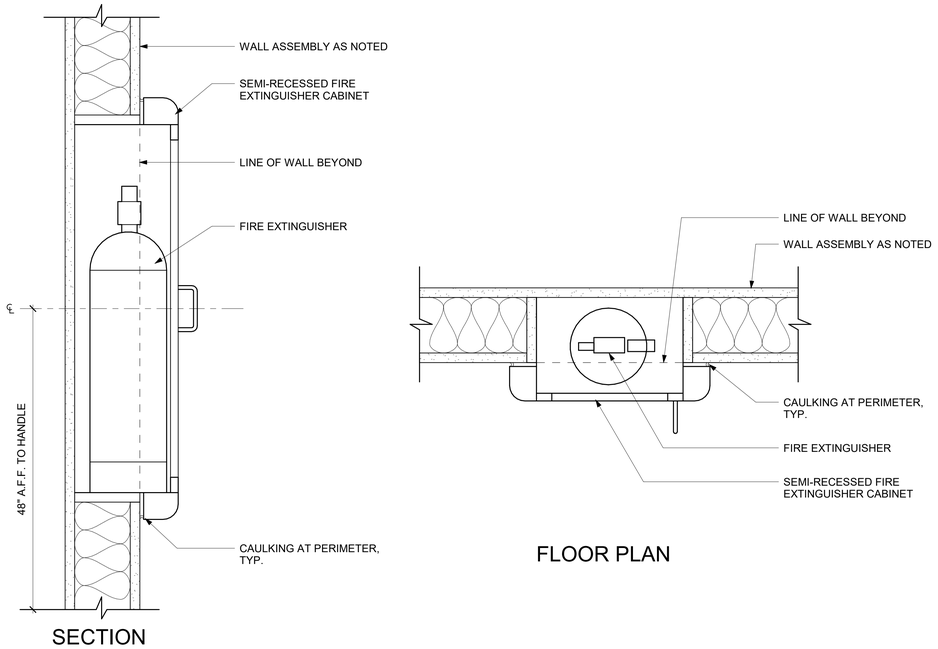

SEMI-RECESSED FEC ON UNRATED WALL

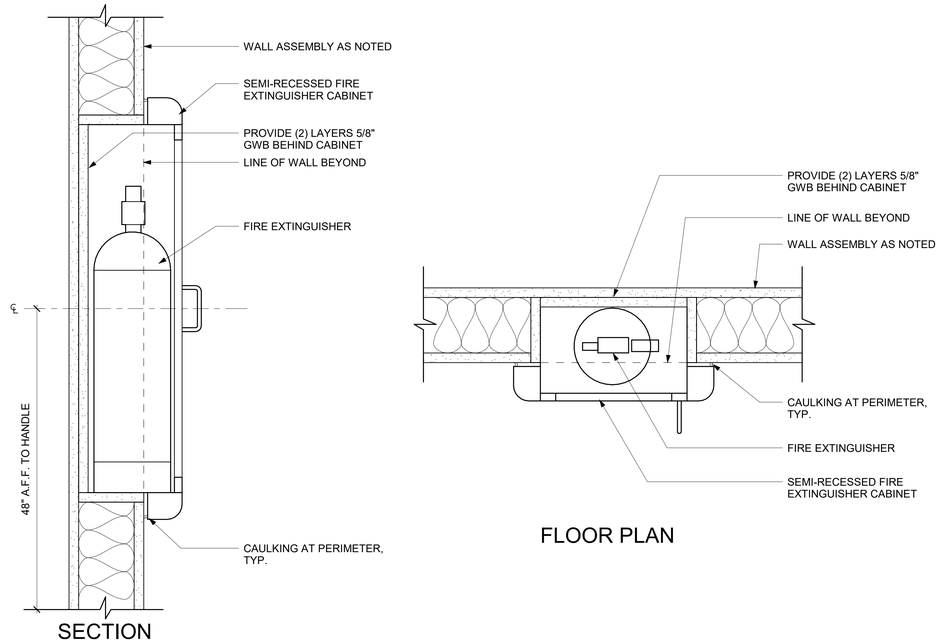

SEMI-RECESSED FEC ON RATED WALL

5 SEMI-RECESSED FEC
3" = 1'-0"

GENERAL NOTES

1. PROVIDE NEW 3/4" FRT PLYWOOD ON WALLS WHERE INDICATED ON PLANS.
2. REFER TO DETAIL #3 ON SHEET AE421 FOR A TYPICAL TELECOMMUNICATION ROOM INTERIOR ELEVATION.
3. INSTALL VERTICAL STUD OR HORIZONTAL BLOCKING AT ALL GWB EDGES.
4. ALL PRODUCTS AND WALL FINISHES SHALL MATCH EXISTING OR ADJACENT UNLESS OTHERWISE NOTED.

Revisions:	Date:

CONSULTANT/ DISCIPLINE
DISCIPLINE:

ARCHITECT/ ENGINEER OF RECORD
A/E:
SPEES DESIGN BUILD
23830 PACIFIC HIGHWAY S. SUITE 300
KENT, WA 98032
SPEESDESIGNBUILD

STAMP
REGISTERED ARCHITECT 10000 JAMES M. KING STATE OF WASHINGTON

Office of Construction and Facilities Management
VA U.S. Department of Veterans Affairs

Drawing Title: INTERIOR ELEVATIONS, TR PLAN VIEW, WINDOW DETAIL & SEMI-RECESSED FEC DETAIL
Approved:
Phase: 100% CONSTRUCTION DOCUMENTS
Project Title: EHRM INFRASTRUCTURE UPGRADES - WEST HAVEN
Project Number: 689-22-700
Building Number:
Location: VA CT WEST HAVEN, 950 CAMPBELL AVENUE, WEST HAVEN, CT 06516
Drawing Number: AE421
Issue Date: 04/20/2026
Checked: JS/JRS
Drawn: JRS

SIGNAGE SCHEDULE

SIGNAGE ID	BUILDING NUMBER	ROOM NUMBER	COMMENTS
IN-03.01-01	001	SG105B	-
IN-03.01-02	001	SG171	-
IN-03.01-03	001	SG170A	-
IN-03.01-04	001	G192	-
IN-03.01-05	001	G192A	-
IN-03.01-06	001	G192B	-
IN-03.01-07	001	G192C	-
IN-03.01-08	001	G277	-
IN-03.01-09	001	G108	-
IN-03.01-10	001	1190	-
IN-03.01-11	001	2151	-
IN-03.01-12	001	3154	-
IN-03.01-13	001	4259A	-
IN-03.01-14	001	5195	-
IN-03.01-15	001	6204	-
IN-03.01-16	001	7204	-
IN-03.01-17	001	8139	-
IN-03.01-18	001	9122A	-
IN-03.01-19	001	9122B	-
IN-03.01-20	002	G132	-
IN-03.01-21	002	G132A	-
IN-03.01-22	002	G143C	-
IN-03.01-23	002	1303B	-
IN-03.01-24	002	1279A	-
IN-03.01-25	002	1238	-
IN-03.01-26	002	1239	-
IN-03.01-27	002	2107D	-
IN-03.01-28	002	2107E	
IN-03.01-29	002	2228	-
IN-03.01-30	002	3222	-
IN-03.01-31	002	4222	-
IN-03.01-32	002	5222	-
IN-03.01-33	002	6209	-
IN-03.01-34	002	7205	-
IN-03.01-35	002	8141	-
IN-03.01-36	003	105A	-
IN-03.01-37	003	206	-
IN-03.01-38	004	110	-
IN-03.01-39	004	210A	-
IN-03.01-40	005	C-103	-
IN-03.01-41	005	C-244	-
IN-03.01-42	005	C-314	-
IN-03.01-43	006	128	-
IN-03.01-44	006	222	-
IN-03.01-45	006	223	-
IN-03.01-46	011A	113	-
IN-03.01-47	014A	102	-
IN-03.01-48	015	128	-
IN-03.01-49	015A	112	-
IN-03.01-50	024	A-1A	-
IN-03.01-51	027-034	159	-
IN-03.01-52	027-034	149	NOT AN EXIT SIGN
IN-03.01-53	027-034	140	NOT AN EXIT SIGN
IN-03.01-54	035	B18	-
IN-03.01-55	035	115	-
IN-03.01-56	035A	124A	-
IN-03.01-57	035A	225A	-
IN-03.01-58	036	105	-
IN-03.01-59	036A	114	-

SIGNAGE SCHEDULE - DATA CENTER

SIGNAGE ID	BUILDING NUMBER	ROOM NUMBER / BUILDING NAME	COMMENTS
EN-06.06-1	041	DATA CENTER	2 SETS
EN-06.06-2	042	GENERATOR ENCLOSURE	-
IN-03.01-60	041	104	-
IN-03.01-61	041	105	-
IN-03.01-62	041	106	-
IN-03.01-63	041	107	-
IN-03.01-64	041	108	-
IN-03.01-65	041	109	-
IN-03.01-66	041	110	-
IN-03.01-67	041	111	-
IN-03.01-68	041	114	2 SETS
IN-03.01-69	041	113	
IN-03.01-70	041	104	-
IN-03.01-71	042	121	-
IN-03.01-72	042	121	-
IN-03.01-73	042	122	-

DRAWING NOTES SCHEDULE

NOTE #	NOTE
I-1	ROOM NUMBER/HEADER PANEL: 1/4" THICK PAINT TO MATCH ACRYLIC PANEL (A01). PAINT TO MATCH SPECIFIED ZONE/SAFETY COLOR. SAND FACES PRIOR TO PAINTING FOR SMOOTH FACES AND EASED EDGES. SEE MESSAGE LIST FOR COLOR INFORMATION. LAMINATE TO BACKER PANEL.
I-2	TACTILE COPY IS 3/32". ROWMARK TACTILE COPY (M1).
I-3	GRADE 2 BRAILLE BEADS (M2), PAINT TO MATCH BACKGROUND COLOR. WHITE ON WHITE ACRYLIC.

MATERIAL & FINISHES SCHEDULE

NUMBER	DESCRIPTION	MANUFACTURER/ COLOR	NOTE
ACRYLIC			
A01	WHITE	P95 WHITE ACRYLIC	MATTE
MATERIAL			
M1	ROWMARK	P02	
M2	BRAILLE BEADS	GRADE 2 BEADS, CLEAR	
M3	MAIN PANEL	REMOVABLE SOLID PANEL W/ DECORATIVE LAMINATE FINISH	
PAINT			
P01	MATCH EXISTING ADJACENT SIGNAGE COLOR; VERIFY WITH COR		
P02	WHITE	MATCH MATTHEWS PAINT MP32071, WHITE WONDER	USE WHITE WHEN BACKGROUND COLOR IS DARK
P03	BLACK	MATCH VALSPAR 324Q TEMPEST'S TEAPOT	USE BLACK WHEN BACKGROUND COLOR IS LIGHT

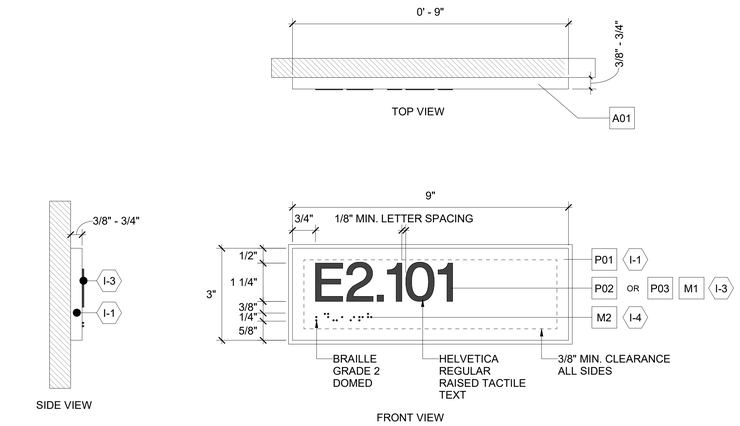

1 IN-03.01 - ROOM NUMBER SIGN

6" = 1'-0"

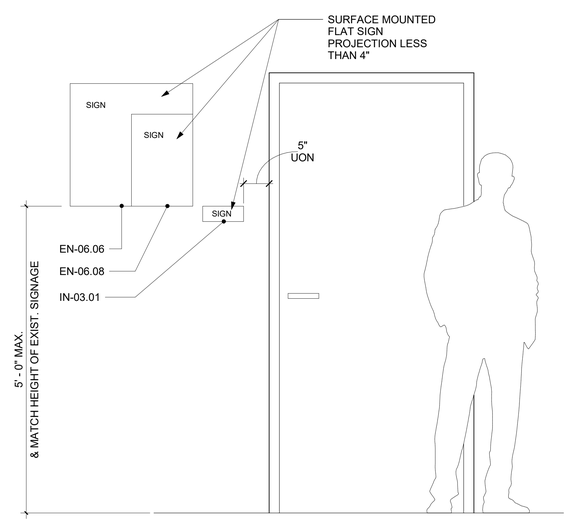

2 SIGN - ELEVATION LOCATION

1" = 1'-0"

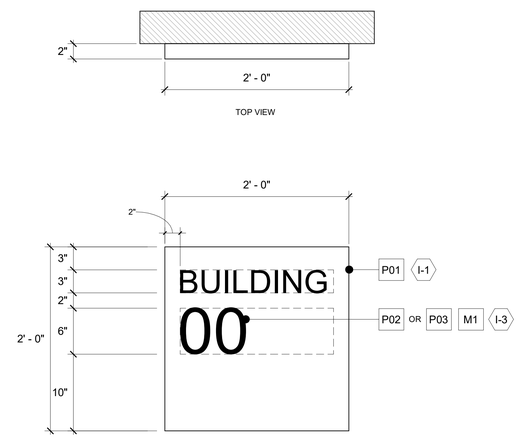

3 EN-06.06 BUILDING NUMBER SIGN

1 1/2" = 1'-0"

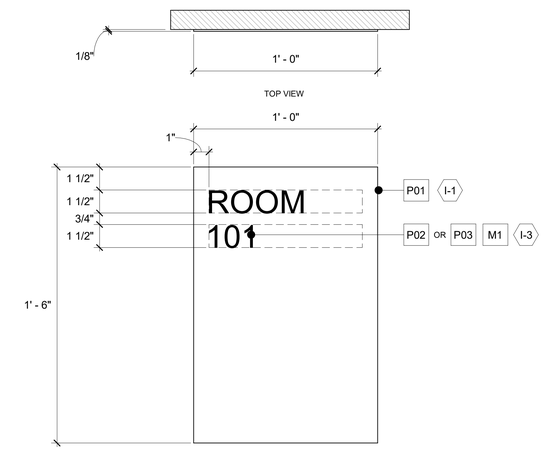

4 EN-06.08 - INFORMATIONAL SIGN

3" = 1'-0"

GENERAL NOTES

1. SIGNAGE SHOWN IN CONSTRUCTION DOCUMENTS SHOULD BE COORDINATED WITH THE VA INTERIOR DESIGNER TO MATCH STATION SPECIFIC STANDARDS.
2. CONFIRM ALL SIGNAGE WITH VA PRIOR TO CONSTRUCTION.

Revisions:	Date:

CONSULTANT/ DISCIPLINE

DISCIPLINE:

ARCHITECT/ ENGINEER OF RECORD

A/E:
SPEES DESIGN BUILD
23830 PACIFIC HIGHWAY S. SUITE 300
KENT, WA 98032
SDB SPEESDESIGNBUILD

STAMP

10000 REGISTERED ARCHITECT JAMES M. KING STATE OF WASHINGTON

Office of Construction and Facilities Management

VA U.S. Department of Veterans Affairs

Drawing Title: ROOM NUMBER SIGN & SIGNAGE SCHEDULE

Approved:

Phase: 100% CONSTRUCTION DOCUMENTS

Project Title: EHRM INFRASTRUCTURE UPGRADES - WEST HAVEN

Project Number: 689-22-700

Building Number:

Location: VA CT WEST HAVEN, 950 CAMPBELL AVENUE, WEST HAVEN, CT 06516

Issue Date: 04/20/2026 | Checked: JS/JRS | Drawn: JRS/RB

Drawing Number: AW001

VA FORM 08 - 6231

08/05/2026 7:14:59 am

Autodesk Docs://689-22-700 VA CT West Haven EHRM IU/VAWH_GEN SHEETS_SDB.rvt

FEC SIGNAGE SCHEDULE

SIGNAGE ID	BUILDING NUMBER	ROOM NUMBER	COMMENTS
IN-01.31	001	G192	-
IN-01.02	001	G277	-
IN-01.31	001	G108	-
IN-01.31	001	SG105B	-
IN-01.31	001	SG171	-
IN-01.31	001	1190	-
IN-01.31	001	2151	-
IN-01.31	001	3154	-
IN-01.31	001	4259A	-
IN-01.31	001	5195	-
IN-01.31	001	6204	-
IN-01.31	001	7204	-
IN-01.31	001	8139	-
IN-01.31	001	9122A	-
IN-01.02	002	G132A	-
IN-01.31	002	G143C	-
IN-01.31	002	1303B	-
IN-01.02	002	1279A	-
IN-01.31	002	1239	-
IN-01.31	002	2107D	-
IN-01.31	002	2228	-
IN-01.31	002	3222	-
IN-01.31	002	4222	-
IN-01.31	002	5222	-
IN-01.31	002	6209	-
IN-01.31	002	7205	-
IN-01.31	002	8141	-
IN-01.31	002B	2B-107	-
IN-01.02	003	105A	-
IN-01.02	003	206	-
IN-01.02	004	19	-
IN-01.31	004	110	-
IN-01.31	004	210A	-
IN-01.31	005	C-103	-
IN-01.31	005	C-244	-
IN-01.31	005	C-314	-
IN-01.31	006	128	-
IN-01.31	006	222	-
IN-01.31	011	202	-
IN-01.31	011A	113	-
IN-01.31	012	202	-
IN-01.31	012A	119	-
IN-01.31	014A	102	-
IN-01.02	015	128	-
IN-01.02	015A	112	-
IN-01.02	021	2A	-
IN-01.02	022	13	-
IN-01.02	024	A-1A	-
IN-01.31	027-034	159	-
IN-01.31	035	B18	-
IN-01.31	035	115	-
IN-01.31	035A	124A	-
IN-01.31	035A	225A	-
IN-01.31	036	105	-
IN-01.02	036A	114	-

FEC SIGNAGE SCHEDULE - DATA CENTER

SIGNAGE ID	BUILDING NUMBER	ROOM NUMBER	COMMENTS
IN-01.31	041	114	2 SETS

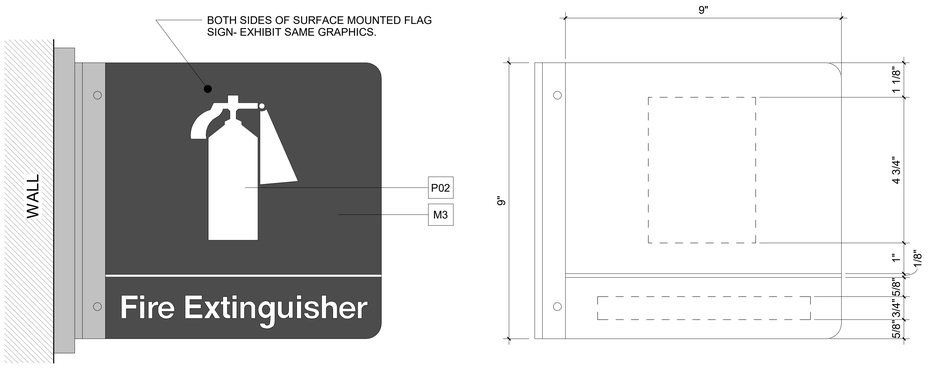

IN.01-31 - SIDE ELEVATION FLAG SIGN

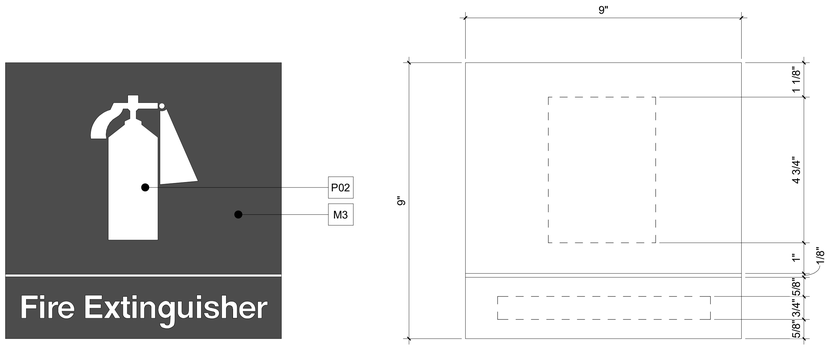

IN.01-02 - FRONT ELEVATION FLAT SIGN

1 FIRE EXTINGUISHER IDENTIFICATION FLAG
6" = 1'-0"

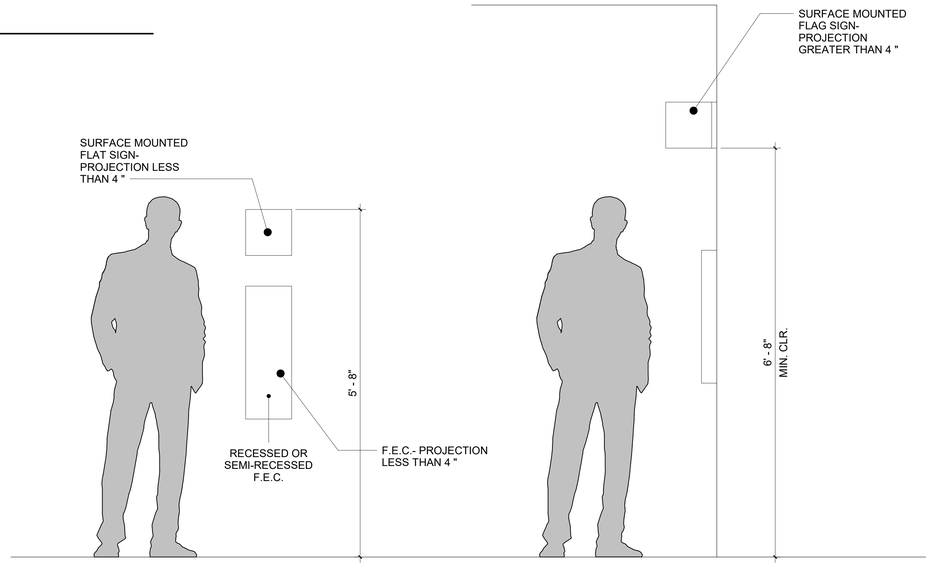

2 ELEVATION LOCATIONS
1" = 1'-0"

Revisions:	Date:

CONSULTANT/ DISCIPLINE

DISCIPLINE:

ARCHITECT/ ENGINEER OF RECORD

A/E:
SPEES DESIGN BUILD
23830 PACIFIC HIGHWAY S. SUITE 300
KENT, WA 98032

SPEESDESIGNBUILD

STAMP

10000 REGISTERED ARCHITECT JAMES M. KING STATE OF WASHINGTON

Office of Construction and Facilities Management

VA U.S. Department of Veterans Affairs

Drawing Title: FEC SIGNAGE SCHEDULE

Approved:

Phase: 100% CONSTRUCTION DOCUMENTS

Project Title: EHRM INFRASTRUCTURE UPGRADES - WEST HAVEN

Project Number: 689-22-700

Building Number:

Location: VA CT WEST HAVEN
950 CAMPBELL AVENUE, WEST HAVEN, CT 06516

Drawing Number: AW002

Issue Date: 04/20/2026

Checked: JS

Drawn: RB

VA FORM 08 - 6231

1 08/05/2026 7:15:03 am

Autodesk Docs://689-22-700 VA CT West Haven EHRM IUVAWH_GEN SHEETS_SDB.rvt