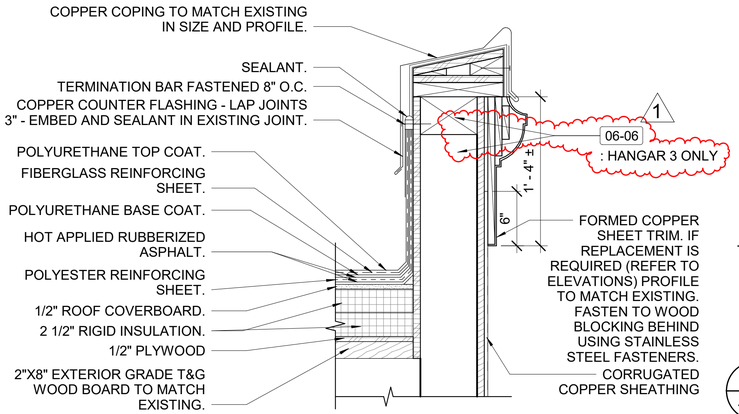

1 A5.0.2 HANGAR PARAPET WALL DETAIL
SCALE Ⓐ

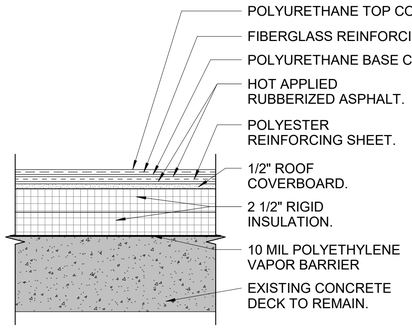

4 A5.0.2 BOILER ROOM ROOF DETAIL
SCALE Ⓐ

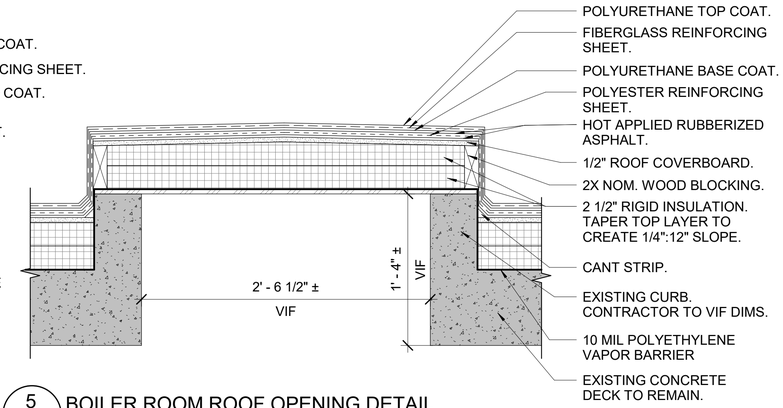

5 A5.0.2 BOILER ROOM ROOF OPENING DETAIL
SCALE Ⓐ

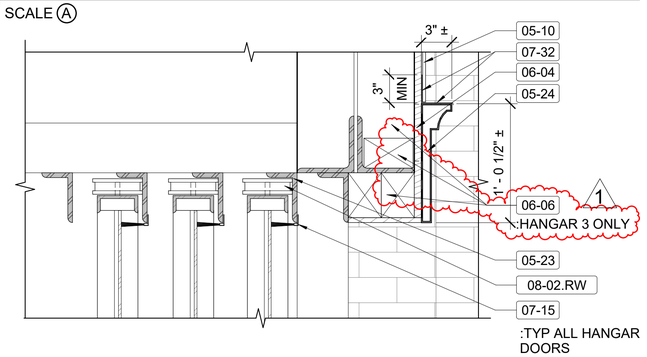

2 A5.0.2 HANGAR DOOR - HEAD - TYP
SCALE Ⓐ

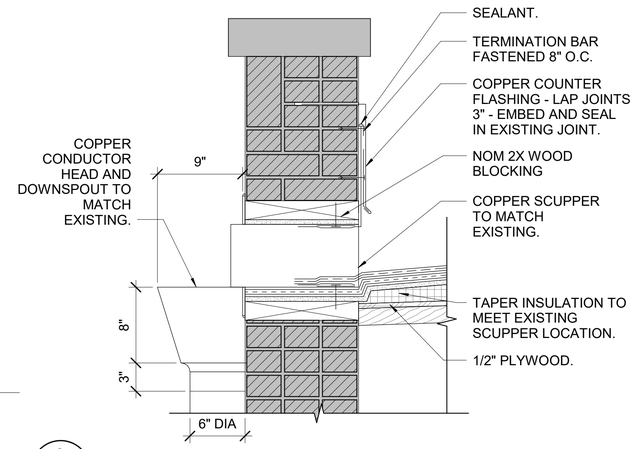

6 A5.0.2 LEAN TO THRU PARAPET SCUPPER DETAIL
SCALE Ⓐ

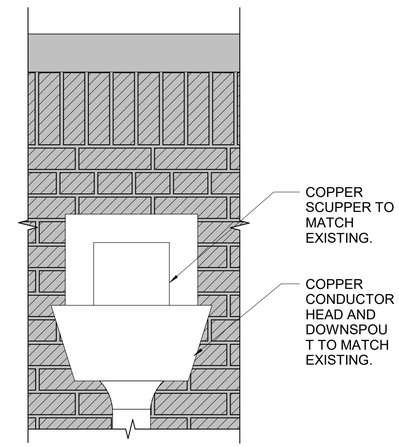

7 A5.0.2 LEAN TO SCUPPER ELEVATION
SCALE Ⓐ

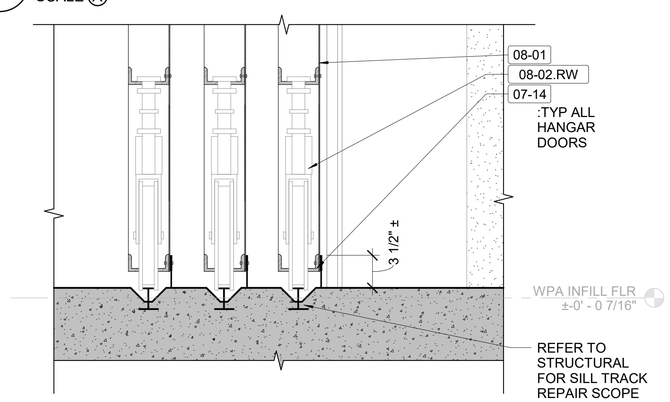

HANGAR DOOR WHEELS, EXISTING CONDITION

CONTRACTOR TO REVIEW EXISTING SALVAGED HANGAR DOOR WHEELS FOR SOUND PARTS BEFORE CREATING REPLICA WHEELS.

3 A5.0.2 HANGAR DOOR - SILL - TYP
SCALE Ⓐ

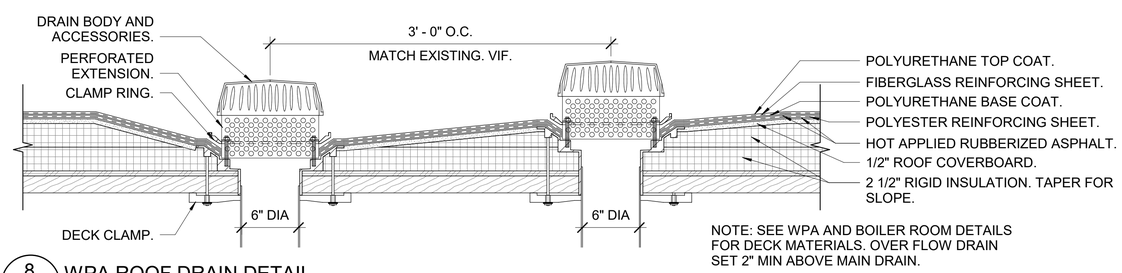

NOTE: SEE WPA AND BOILER ROOM DETAILS FOR DECK MATERIALS. OVER FLOW DRAIN SET 2" MIN ABOVE MAIN DRAIN.

8 A5.0.2 WPA ROOF DRAIN DETAIL
SCALE Ⓐ

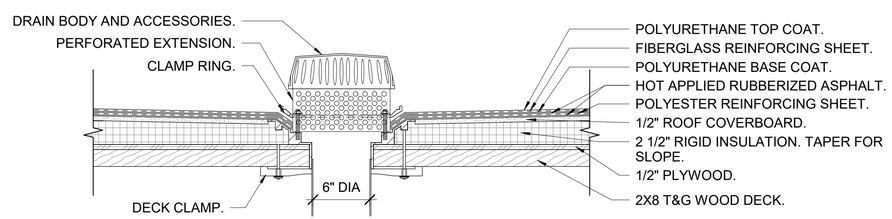

9 A5.0.2 DOOR POCKET ROOF DRAIN DETAIL
SCALE Ⓐ

SHEET NOTES

1. CONTRACTOR TO VERIFY ALL EXISTING DIMENSIONS IN FIELD.
2. ALL HANGAR DOORS SHOULD BE REMOVED COMPLETELY FROM THEIR TRACKS FOR RESTORATION.
3. REFER TO STRUCTURAL DRAWINGS FOR REPLACEMENT/REPAIR OF HANGAR DOOR STRUCTURAL MEMBERS.
4. HANGAR DOORS ARE TO BE REINSTALLED TO BE FULLY OPERABLE.
5. FOR HANGAR DOOR STRUTURAL MEMBER REPAIRS, SEE DETAILS ON STRUCTURAL DRAWINGS.

KEYNOTES

KEY VALUE	TEXT
05-10	INSTALL CORRUGATED COPPER SHEETING TO MATCH EXISTING.
05-23	CLEAN, PRIME AND PAINT EXISTING UPPER HANGAR DOOR TRACKS TO ENSURE FULL DOOR OPERABILITY. SEE STRUCTURAL.
05-24	FORMED COPPER SHEET TRIM. IF REPLACEMENT IS REQUIRED (REFER TO ELEVATIONS) PROFILE TO MATCH EXISTING. FASTEN TO WOOD PLANKING BEHIND USING STAINLESS STEEL FASTENERS.
06-04	INSTALL REPLACEMENT WOOD PLANKING SUBSTRATE. ASSUME 1X6 BOARDS.
1 06-06	AT HANGAR 3, ASSUME THERE IS 2 X TREATED WOOD BLOCKING AT ALL VERTICAL AND HORIZONTAL FRIEZE TRUSS ELEMENTS, AS WELL AS ALONG THE BOTTOM OF THE TRUSS. REPLACE 100%.
07-14	3/16" NEOPRENE CONTINUOUS WEATHERSTRIPPING WITH POWDER COATED ALUMINUM RETAINER AND ALUMINUM RIVET FASTENERS. POWDER COATING COLOR TO MATCH HANGAR DOORS. VERIFY REQUIRED NEOPRENE WIDTH IN FIELD.
07-15	NYLON BRUSH 90 DEGREE CONTINUOUS WEATHERSTRIPPING WITH POWDER COATED ALUMINUM RETAINER AND ALUMINUM RIVET FASTENERS. POWDER COATING COLOR TO MATCH HANGAR DOORS. VERIFY REQUIRED NYLON BRUSH WIDTH IN FIELD. TRIM IF NECESSARY ACCORDING TO MANUFACTURER'S INSTRUCTIONS.
07-32	CONTINUOUS COPPER SHEET FLASHING WITH DRIP EDGE ALONG ENTIRE LENGTH OF FACADE. FASTEN TO WOOD PLANK SUBSTRATE WITH STAINLESS STEEL FASTENERS.
08-01	REMOVE EXISTING ALUMINUM PANEL. STRIP EXISTING PAINT. SHOP PRIME AND PAINT. REINSTALL WITH ALUMINUM RIVETS TO MATCH EXISTING HISTORIC FASTENERS. PRIME AND PAINT RIVETS TO MATCH.
08-02.RW	REPLACE EXISTING ROLLING WHEEL WITH IN-KIND REPLACEMENT HISTORIC ROLLING WHEEL AND HARDWARE.

SCALE Ⓐ 12" 6" 0" 1'
SCALE OF FEET

DESIGNED: CT	SUB SHEET NO.	TITLE OF SHEET	DRAWING NO.
CADD: SW	A5.0.2	ROOF & HANGAR DOOR DETAILS	646 190066
TECH. REVIEW: AK			PMIS/PKG NO. GATE 308504
DATE: 10/17/2025		GATEWAY NATIONAL RECREATION AREA	SHEET 80 OF 153

Autodesk Docs://GATE Floyd Bennett Field/GATE_Floyd Bennett Field_R26.rvt
6/17/2026 2:11:18 PM