Industrial 120VDC 10 to 60KVA UPS

Professional Series (ProUPS) Uninterruptible Power Supply

- True On-line Technology for Maximum Power Protection
- Input Power Factor Correction Reduces Power Consumption Conserving Energy
- Input THD Less Than 4%
- Full Load Rated No-Break Dual Solid-State Static Switch
- Reliable and Robust Design
- 20+ year Design Life
- Full Input/Output Isolation, Copper Wound Transformers
- LCD Monitoring Panel with Power Flow Diagram
- Dual Input for Optimal Load Protection
- Redundant Cooling System
- Ethernet RJ45 Communications Port
- Form "C" Interface Contacts
- Generator Compatible Rectifier Input
- Built to Meet UL1778, NEMA, NEC, ANSI and FCC requirements

20KVA Model Shown

OPTIONS

- ⇒ Multiple Voltage Inputs/Outputs Available
- ⇒ 50Hz/60Hz Models
- ⇒ External Maintenance Bypass Switch
- ⇒ Air Filtration and Conformal Coating
- ⇒ Emergency Power Off / Shunt Trip
- ⇒ Redundant Configurations Available
- ⇒ Customizable Designs for Unique Applications

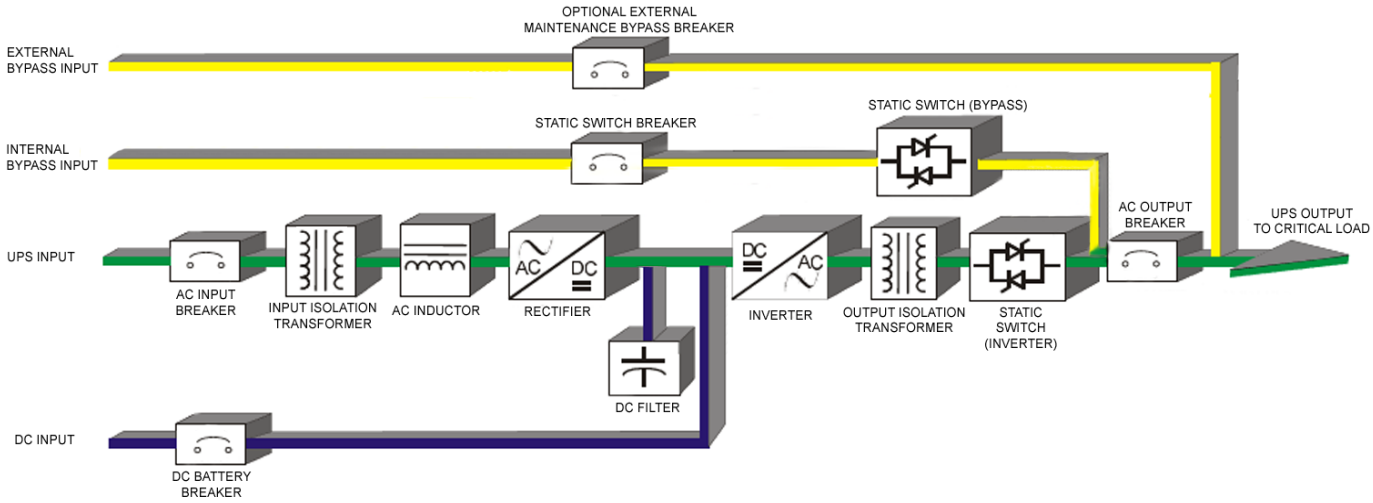

Industrial 120VDC
10 to 60KVA UPS

Technical Specifications																
Model	**10kva**		**15kva**		**20kva**		**25kva**		**30kva**		**40kva**		**50kva**		**60kva**	
Input Voltage[2] (3 Ph)	208	480	208	480	208	480	208	480	208	480	208	480	208	480	208	480
Nom. Current (Amps)	31.1	13.5	46.7	20.2	62.3	27	77.8	33.7	93.4	40.5	124.5	53.9	155.6	67.4	186.75	80.9
Max Current (Amps)	33.3	14.4	50	21.6	66.7	28.9	83.4	36.1	100	43.3	133.4	57.8	166.7	72.2	200.1	86.7
Input Power Factor	Typically 1.0 P.F. @ full load															
Input Frequency[1]	50/60Hz ±-6%															
AC Output Three-Phase																
Output Voltage VAC[2]	208	480	208	480	208	480	208	480	208	480	208	480	208	480	208	480
Frequency[1] (Hz)	60Hz		60Hz		60Hz		60Hz		60Hz		60Hz		60Hz		60Hz	
Full Load (Amps)	28.7	12.0	41.7	18.1	55.6	24.1	69.5	30.1	83.4	36.1	111.2	48.2	139	60.2	166.8	72.3
AC Output Single-Phase																
Output Voltage[2] VAC	120	240	120	240	120	240	120	240	120	240	120	240	120	240	120	240
Frequency[1] (Hz)	60Hz		60Hz		60Hz		60Hz		60Hz		60Hz		60Hz		60Hz	
Full Load (Amps)	83.4	41.7	126	63	166	83	208	104	250	125	334	167	416	208	500	250
DC Link																
Nominal DC Voltage[2]	120		120		120		120		120		120		120		120	
DC Watts (Full Load)	9,600		14,400		19,200		24,000		28,800		38,400		48,000		57,600	
DC Amps (Full Load)	80		120		160		200		240		320		400		480	
Max DC Amps	100		150		200		250		300		400		500		600	
End of Discharge	105VDC		105VDC		105VDC		105VDC		105VDC		105VDC		105VDC		105VDC	
Number of Cells	60		60		60		60		60		60		60		60	
VDC Flt/Eq. Range	105 to 150		105 to 150		105 to 150		105 to 150		105 to 150		105 to 150		105 to 150		105 to 150	
Efficiency																
AC to AC (%)	80		80		80		80		80		80		80		80	
DC to AC (%)	90		90		90		90		90		90		90		90	
BTU/Hr.	5,459		8,189		10,918		13,648		16,378		21,837		27,296		32,755	
Mechanical																
Size W x D x H (in)	31.5x34x65		31.5x34x65		49.25x34x65		63x34x65		63x34x65		63x34x65		81x34x65		81x34x65	
Weight (lbs)	1,280		1,350		1,560		1,750		2,010		2,700		3,020		3,380	

Input

Voltage:	3 Phase, 3-wire plus ground
Range:	+10%, -20%
Regulation:	±1% from 0 to 100% load
Power Factor:	.99 P.F. at full rated load
Walk-In:	10 seconds to full load
Input THD:	Typically less than 4%
Frequency:	50Hz or 60Hz ±6%
Surge Protection:	ANSI C62.41

Output

Voltage:	3/1 Ph, 2, 3 or 4-wire + ground
Regulation:	±2% from 0 to 100% load
Unbalanced:	±3% for 100% unbalanced load
Output THD:	<3% linear, <5% nonlinear load
Overload:	120% for 15 min, 150% for 1 min, Bypass- 1000% for 1 sec
Slew Rate:	1Hz per second (adjustable)
Frequency:	± 0.01% free running

Environmental

Ambient Temperature:	0°C to 40°C (45°C capable)
Relative Humidity:	Up to 95% non-condensing
Acoustical Noise:	<65dB (A) scale @ 1 meter
Altitude:	5,000 Ft without de-rating
Storage Temperature:	-20°C to 70°C

General Information

Cable Entry:	Top or Bottom
Ventilation:	Forced Air N+1
Paint:	Light Gray *(316 Stainless Steel Optional)*
Cabinet:	NEMA1, Seismic Zone 4 Rated

Note:

1. *Specifications shown reflect standard 60Hz UPS models. Models of 50Hz, 400Hz, or other frequencies available*
2. *Other input/output/DC link voltage configurations are available by contacting the factory.*
3. *All models are available as stand alone DC to AC inverters and frequency converters.*
4. *All data is subject to change without notice.*

LTI Power Systems • 10800 Middle Ave., Bldg. B • Elyria, OH 44035
Phone 888 327-5050 • Fax 440 458-8140 • www.ltipowersystems.com