1217087-301

Revision • A DA7009
Part • WAVEGUIDE ASSY, 1WG12 (REDUNDANT) •
Effective From: **07/22/1992 10:00:00 PM PDT** to
...

Production

Unincorporated

BOM

Effective From: 07/22/1992 10:00:00 PM PDT **To:**

Level	Part Number	Item	Qty	U/M	Nomenclature	Ref Des	Cage	Drawing Number	Rev	Notes	Sites
.1	1215260-201	1	2.00	EACH	W/G,CAST BEND,90 MITER E		56232	1215260	- AGL1215260-		
.1	1215261-201	2	4.00	EACH	W/G,CAST BEND,90 MITER H		56232	1215261	- AGL1215261-		
.1	1217087-101	3	1.00	EACH	M85/1-042-019		56232	1217087	A DA7009		
.1	1217087-102	4	2.00	EACH	M85/1-042-006		56232	1217087	A DA7009		
.1	M3922/52-010	5	1.00	EACH	FLANGE, WAVEGUIDE, FLAT		81349	MIL-DTL-3922/52	- AGLM3922/52-010-		
.1	M3922/61-001	6	1.00	EACH	FLANGE, WAVEGUIDE, CHOKE		81349	MIL-F-3922/61	- AGLM3922/61-001-		
.1	1217087-103	7	1.00	EACH	M85/1-042-003		56232	1217087	A DA7009		
.1	1217087-104	8	1.00	EACH	M85/1-042-003		56232	1217087	A DA7009		
.1	1217087-105	9	1.00	EACH	M85/1-042-003		56232	1217087	A DA7009		
.1	1217087-106	10	1.00	EACH	M85/1-042-006		56232	1217087	A DA7009		
.1	655-CLFS-BALSI-4	11	1.00	EACH	BRAZING FILLER METAL		81348	QQ-B-655	- AGL655-CLFS-BALSI-4-		
.1	1757-CLRY	12	1.00	EACH	PRIMER COATING		81348	TT-P-1757	- AGL1757-CLRY-		
.1	527-CLR30372	13	1.00	EACH	ENAMEL,ALKYD,LUSTERLESS		81348	TT-E-527	- AGL527-CLR30372-		
.1	5541-CL3, TYPE II	702	1.00	UW	CHEMICAL CONVERSION COATING		81349	MIL-DTL-5541	- AGL5541-CL3-_DUP1		
.1	454-RQ59	703	1.00	EACH	BRAZING		96906	MIL-STD-454	- AGL454-RQ59-		
.1	454-RQ9	704	1.00	UW	WORKMANSHIP		96906	MIL-STD-454	- AGL454-RQ9-_DUP1		
.1	7883-GRB	705	1.00	EACH	BRAZING QUALITY		81349	MIL-B-7883	- AGL7883-GRB-		
.1	MIL-STD-130	706	1.00	UW	IDENTIFICATION MARKING		96906	MIL-STD-130	G AGLMIL-STD-130G		
.1	276-MTHDB	707	1.00	EACH	IMPREGNATION OF POROUS CASTING		96906	MIL-STD-276	- AGL276-MTHDB-		

1217087

Revision • - DA7009
Document • WAVEGUIDE ASSY •
Effective From: **07/22/1992 10:00:00 PM PDT** to
...

Production

Unincorporated

BOM

Effective From: 07/22/1992 10:00:00 PM PDT **To:**

Level	Item Number	Item Description	Rev		Find Num	Qty	Ref Des	Sites	Notes
.1	1217087-101	M85/1-042-019	A	DA7009	0	1			
.1	1217087-102	M85/1-042-006	A	DA7009	0	1			
.1	1217087-103	M85/1-042-003	A	DA7009	0	1			
.1	1217087-104	M85/1-042-003	A	DA7009	0	1			
.1	1217087-105	M85/1-042-003	A	DA7009	0	1			
.1	1217087-106	M85/1-042-006	A	DA7009	0	1			
.1	1217087-301	WAVEGUIDE ASSY, 1WG12 (REDUNDANT)	A	DA7009	0	1			

NOTES - UNLESS OTHERWISE SPECIFIED

1. APPLICABLE STANDARDS/SPECIFICATIONS:
   A. DOD-STD-100
   B. ANSI-Y14.5M-1982
2. WORKMANSHIP PER MIL-STD-454 REQT. 9.
3. REMOVE BURRS AND BREAK ALL SHARP EDGES TO .015 MAX RADIUS OR CHAMFER, EXCEPT TO .005 MAX RADIUS AT THE INTERNAL EDGES AT WAVEGUIDE OPENINGS.
4. MAXIMUM ALLOWABLE STEP OR DISCONTINUITY ALONG INNER WAVEGUIDE SURFACES AT JOINTS SHALL BE .005
5. FINISH:
   1. CHEMICAL FILM TREATMENT PER MIL-C-5541, CLASS 3.
   2. APPLY ONE COAT OF PRIMER USING ITEM 12 AND TWO COATS OF LUSTERLESS AIR DRY ENAMEL USING ITEM 13.
6. OMIT PAINT FROM ALL HOLES AND FROM SURFACES INDICATED BY ▲.
7. BRAZE PER MIL-STD-454, REQT 59 USING ITEM 11. QUALITY PER MIL-B-7883, GRADE B.
8. UNIT WITH END SEALS MUST WITHSTAND MAXIMUM DROP IN AIR PRESSURE OF 0.2 PSIG IN 5 MIN. FROM AN INITIAL PRESSURE OF 7 PSIG, AFTER REMOVAL OF SOURCE OF AIR PRESSURE.
9. THE PART NUMBER IS THE DRAWING NUMBER SUFFIXED WITH THE APPLICABLE DASH NUMBER AS SHOWN IN TABLE A.

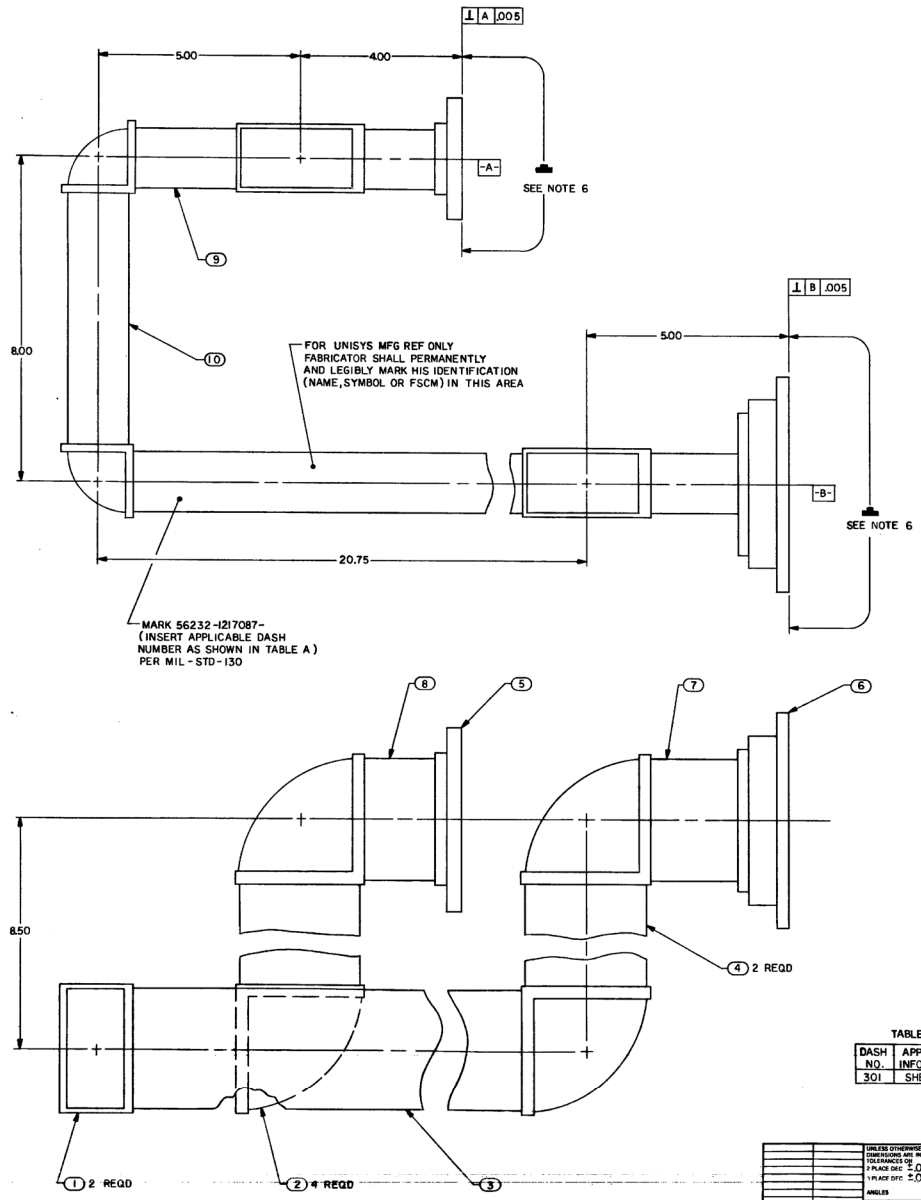

TABLE A

DASH NO.	APPLICABLE INFORMATION
301	SHEET 1

SEE SEPARATE PARTS LIST

1215207 NXRD	UNLESS OTHERWISE SPECIFIED DIMENSIONS ARE IN INCHES TOLERANCES ON: 2 PLACE DEC ±.02 1 PLACE DEC ±.015 ANGLES MATERIAL	CONTRACT 50-DMNW-8-00032	UNISYS CORPORATION SHIPBOARD AND GROUND SYSTEMS GROUP GREAT NECK, N.Y. 11020
NEXT ASSY USED ON APPLICATION			WAVEGUIDE ASSY
			SIZE E FSCM NO. 56232 DWG NO. 1217087 REV
			SCALE 1/1 SHEET OF