Revision	ECO	Changed	Date	Engineer
B		ADDED NOTES	6/16/2010	S.Jaco
C	NEX-0063	OBSOLETE	4/6/2011	IEM
D	NEX-0124	RE-ACTIVATE DRAWING	4/21/2011	IEM

Notes:

1. REMOVE ALL BURRS AND BREAK SHARP EDGES.
2. FINISH: CHEMICAL FILM TREATMENT PER MIL-C-5541, CLASS 3.
3. PRIMER PER MIL-DTL-53022CL, 2 COATS.
4. PAINT PER FED-STD-595, COLOR 17925, SEMI-GLOSS.
5. TOP COAT PER MIL-PRF-22750 F, 2 COATS.
6. IDENTIFICATION, RUBBER STAMP/STENCIL PER MIL-STD-130 AS FOLLOWS:

   BS-2000-150-001

7. USE CONTRASTING COLOR INK AND .09 - .19 HIGH CHARACTERS. LOCATE APPROXIMATELY WHERE SHOWN.
8. ALL JOINTS ARE 90° MITERED JOINTS.
9. BEFORE PAINTING, TEST AS FOLLOWS: VSWR TO BE 1.03 @ 2.7GHz-3.0GHz. PRESSURE TEST @ 8 PSI. PRESSURE DROP 1PSI / 6 HRS. MAXIMUM.
10. ASSEMBLY TO BE ALUMINUM SOLDERED, NO SOLDER PERMITTED INSIDE WAVEGUIDE OR ON FLANGE FACES.
11. SURFACES TO BE FREE OF PAINT OR SOLDER.

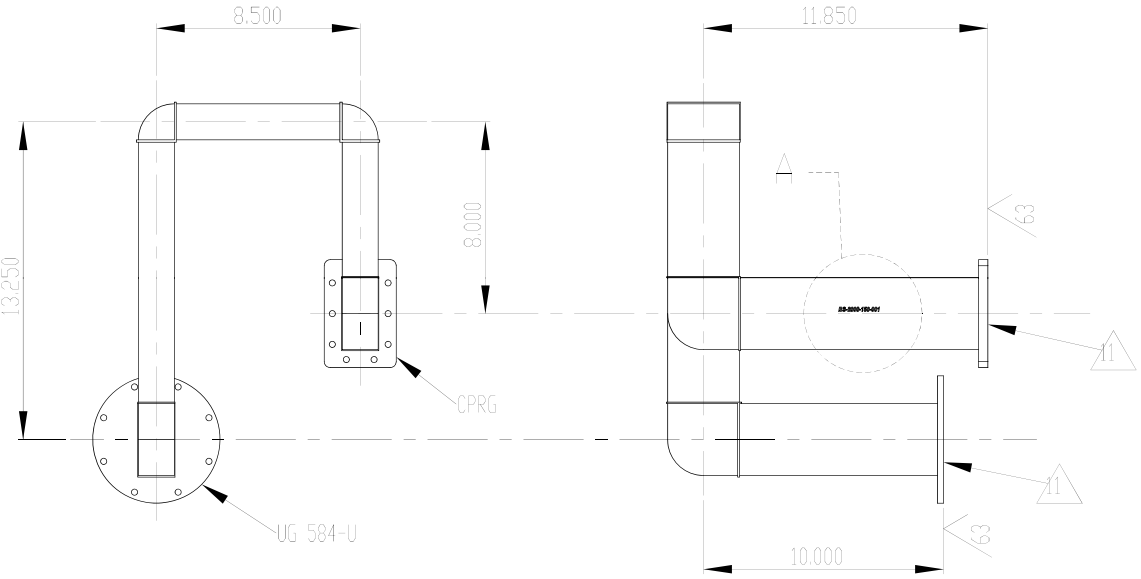

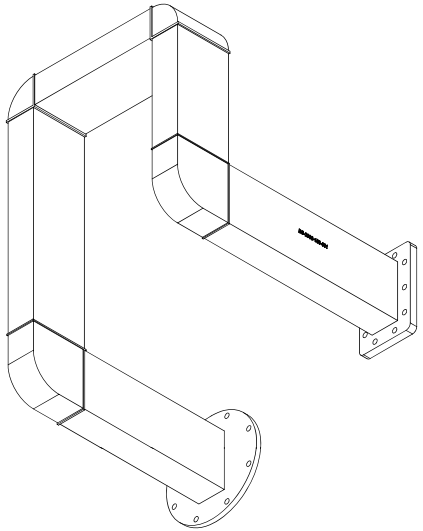

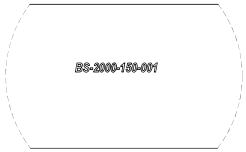

DETAIL A
SCALE 1 : 2.5

WR-284

		UNLESS OTHERWISE SPECIFIED		NAME	DATE
		DIMENSIONS ARE IN INCHES. TOLERANCES: FRACTIONAL ±1/32 ANGULAR: MACH ±1/2° BEND ±1/2° TWO PLACE DECIMAL ±.015 THREE PLACE DECIMAL ±.010	DRAWN	TSJ	2-18-10
			CHECKED		
			ENG APPR.		
			MFG APPR.		
1214777		INTERPRET GEOMETRIC TOLERANCING PER:	Q.A.		
1219677		MATERIAL ALUMINUM	COMMENTS:		
NEXT ASSY	USED ON	FINISH ALODINE			
APPLICATION		DO NOT SCALE DRAWING			

BARON SERVICES INC.

TITLE: Part, EL Rotary Joint to RF Pallet Waveguide

SIZE	DWG. NO.	REV
B	BS-2000-150-001D	D

SCALE: 1:5 WEIGHT: SHEET 1 OF 1