DWG NO 1213778 SHEET OF

NOTES - UNLESS OTHERWISE SPECIFIED:

1. INTERPRET DRAWING IN ACCORDANCE WITH DOD-STD-100.
2. WORKMANSHIP PER MIL-STD-454, REQT 9.
3.
4. MAXIMUM ALLOWABLE STEP OR DISCONTINUITY ALONG INNER WAVEGUIDE SURFACES AT JOINTS SHALL BE .012.
5. FINISH: 1. CHEMICAL FILM TREATMENT PER MIL-C-5541, CLASS 3.
   2. WASH PRIMER PER ITEM 7.
   3. APPLY ONE COAT OF PRIMER USING ITEM 5 AND TWO COATS OF SEMI-GLOSS AIR DRY ENAMEL USING ITEM 6.
6. OMIT PAINT FROM ALL HOLES AND FROM SURFACES INDICATED BY ■.
7. BRAZE PER MIL-STD-454, REQT 59 USING ITEM 4. QUALITY PER MIL-B-7883, GRADE B.
8.
9. UNIT WITH END SEALS MUST WITHSTAND MAXIMUM DROP IN AIR PRESSURE OF 0.2 PSIG IN 5 MIN. FROM AN INITIAL PRESSURE OF 7 PSIG, AFTER REMOVAL OF SOURCE OF AIR PRESSURE.
10. THE PART NUMBER IS THE DRAWING NUMBER SUFFIXED WITH THE APPLICAELE DASH NUMBER AS SHOWN IN TABLE A.
11. EXACT LENGTH OF -307 AND -308 SHOULD BE DETERMINED ON SITE.

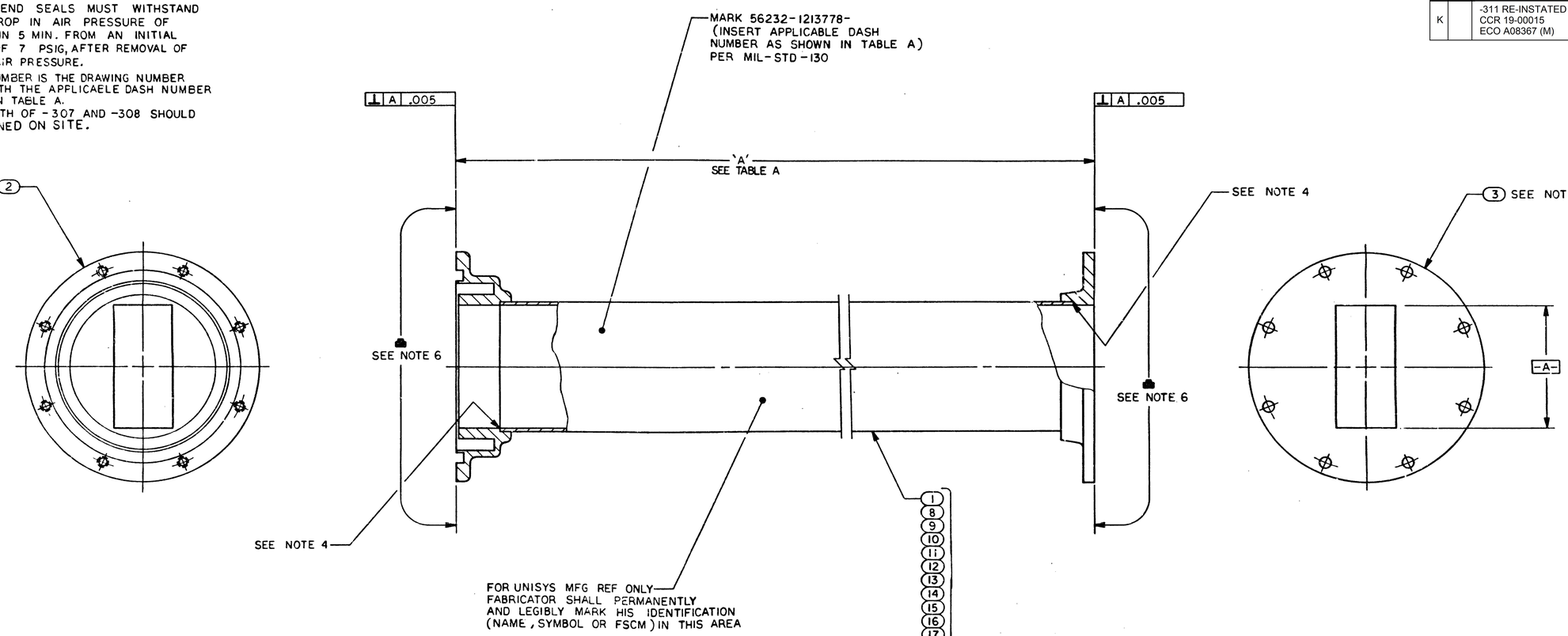

TABLE A

DASH NO.	DIM. A	DASH NO.	DIM. A	DASH NO.	DIM A
301	144.00 ±.03	312	119.75	323	18.50
302	98.43 ±.03	313	40.88	324	20.00
303	28.00	314	103.50	325	20.50
304	36.85	315	34.50	326	21.00
305	23.37	316	3.00	327	21.50
306	53.02	317	83.25	328	22.00
307	SEE NOTE 11	318	19.14	329	88.43
308	SEE NOTE 11	319	21.75	330	7.75
309	26.00	320	8.75	331	106.00
310	45.00	321	25.00		
311	16.00	322	17.25		

SEE SEPARATE PARTS LIST

REVISIONS

REV	ZONE	DESCRIPTION	DATE	APPROVED
A		REVISED AND REDRAWN WAS NON-APL C.O. D17808 (M)	11/21/79	
B		EXTENSIVE CHANGES C.O. D14844 (U)	82-4-18	
C		REVISED NHA BLOCK NOTE 4 WAS SHALL BE .005 ADDED CALLOUT FOR ITEM 22 ADDED DASH NO. 316 TO TABLE A C.O. D16187 (NA)	82-8-19	
D	B-4	REVISED NOTE 1 ADDED -317, -318 AND -319 TO TABLE A ADDED CALLOUTS FOR ITEMS 23, 24 AND 25 C.O. B08339 (NA)	82-3-8	
E	B-4	ADDED CALLOUTS FOR ITEMS 26 AND 27 TABLE A: ADDED DASH NO. 320 AND 321 C.O. DA7046 (NA)	83-12-23	
F		DASHES 322 THRU 328 CONFIGURATIONS ADDED C.O. D10067 (NA)	7/24/85	
G		DASH 329, 330, 331 CONFIGURATION ADDED ECP MOD 243 ECO F02605B (NA)	94-07-07	
H		ECP MOD 243 C.O. F05540 (M)	941225	mcb
J		-311 OBSOLETED BY DP UPGRADE ECP 0274 ECO DPL0184 (B) DP DPLMT CMPLT	130207	RWM
K		-311 RE-INSTATED FOR NRC1 CCR 19-00015 ECO A08367 (M)	191029	MEM

1215200	NXRD	
1215201	NXRD	
1215202	NXRD	
1215203	NXRD	
1215204	NXRD	
1217124	NXRD	
1217125	NXRD	
NEXT ASSY	USED ON	
APPLICATION		

UNLESS OTHERWISE SPECIFIED DIMENSIONS ARE IN INCHES TOLERANCES ON
2 PLACE DEC ±.02
3 PLACE DEC ±.015
ANGLES
MATERIAL

CONTRACT 50-DMNW-8-00032

DWN | CHK | MFG R1665 | QA | STD | APVD FOR SPERRY | APVD FOR CUST

SPERRY — SPERRY CORPORATION ELECTRONIC SYSTEMS GREAT NECK, N.Y. 11020

WAVEGUIDE ASSY STRAIGHT

SIZE E | FSCM NO 56232 | DWG NO 1213778 | REV K

SCALE | SHEET OF

REV | SHEET | SHEET INDEX

DWG NO 1213778 REV K

FORM 6381181

1213778-313

Revision • J F05540
Part • WAVEGUIDE ASSY, STRAIGHT, 40.88", WG27 (MEDFORD) •
Effective From: **11/30/1994 09:00:00 PM PST** to
...

Production

Unincorporated

BOM

Effective From: 11/30/1994 09:00:00 PM PST **To:**

Level	Part Number	Item	Qty	U/M	Nomenclature	Ref Des	Cage	Drawing Number	Rev	Notes	Sites
.1	M3922/61-001	2	1.00	EACH	FLANGE, WAVEGUIDE, CHOKE		81349	MIL-F-3922/61	- AGLM3922/61-001-		
.1	1217817-201	3	1.00	EACH	FLANGE, WAVEGUIDE		56232	1217817	- AGL1217817-		
.1	655-CLFS-BALSI-4	4	1.00	EACH	BRAZING FILLER METAL		81348	QQ-B-655	- AGL655-CLFS-BALSI-4-		
.1	1757-CLRY	5	1.00	EACH	PRIMER COATING		81348	TT-P-1757	- AGL1757-CLRY-		
.1	TT-E-490CLR27875	6	1.00	EACH	ENAMEL,SILICONE ALKYD		81348	TT-E-490	- AGLTT-E-490CLR27875-		
.1	15328	7	1.00	EACH	PRIMER(WASH)		81349	DOD-P-15328	- AGL15328-		
.1	1213778-113	19	1.00	EACH	M85/1-042-041		56232	1213778	G D10067		
.1	MIL-STD-130	702	1.00	UW	IDENTIFICATION MARKING		96906	MIL-STD-130	G AGLMIL-STD-130G		
.1	5541-CL3, TYPE II	703	1.00	UW	CHEMICAL CONVERSION COATING		81349	MIL-DTL-5541	- AGL5541-CL3-_DUP1		
.1	276-MTHDB	704	1.00	EACH	IMPREGNATION OF POROUS CASTING		96906	MIL-STD-276	- AGL276-MTHDB-		
.1	7883-GRB	705	1.00	EACH	BRAZING QUALITY		81349	MIL-B-7883	- AGL7883-GRB-		
.1	454-RQ9	706	1.00	UW	WORKMANSHIP		96906	MIL-STD-454	- AGL454-RQ9-_DUP1		

NUMBER:1217817 PROPERTY OF THE U.S. GOVERNMENT (NATIONAL WEATHER SERVICE) STATUS:Production

APPLICATION

NHA	USED ON	LTR	DATE	CO ECP O/A	REVISION DESCRIPTION	APVD
MULTI	NEXRAD					

1187

SPECIFICATION CONTROL DRAWING

CONTR NO. 50-DMNW-8-00032

UNISYS CORPORATION
SHIPBOARD AND GROUND SYSTEMS GROUP
GREAT NECK, NY 11020

NOMENCLATURE
FLANGE, WAVEGUIDE

RELEASE DATE
APVD DATE
DWN WJP 90-4-6 CHK JB 90-4-13
QA VD 5-14-90 ENGRG RAG 90-4-16
STD EC 4/4/90 MFG DD 90-4-17
R/M

SIZE	FSCM NO.	DWG NO.	REV
A	56232	1217817	-

SCALE NONE SHEET 1 OF 5

1. GENERAL

1.1 INTERPRET DRAWING IN ACCORDANCE WITH DOD-STD-100

1.2 IDENTIFICATION OF THE SUGGESTED SOURCE(S) OF SUPPLY HEREON IS NOT TO BE CONSTRUED AS A GUARANTEE OF PRESENT OR CONTINUED AVAILABILITY AS A SOURCE OF SUPPLY FOR THE ITEM(S).

2. REQUIREMENTS: PER MILITARY SPECIFICATION MIL-F-3922/56 FOR MILITARY PART NUMBER M3922/56-002, UG584/U, MODIFIED AS A BUTT TYPE FLANGE.

2.1 PHYSICAL CONFIGURATION: SEE FIGURE 1

2.2 ITEM IDENTIFICATION: VENDOR IDENTIFICATION AND VENDOR PART NUMBER TO BE APPLIED BY VENDOR PER MIL-STD-130.

SIZE	FSCM NO.	DWG NO.	REV
A	56232	1217817	-

SCALE NONE SHEET 2 OF 5

SUGGESTED SOURCE(S) OF SUPPLY:

AMERICAN RADAR COMPONENTS, INC FSCM 00792
DENVILLE, NJ
PART NO.: SEE TABLE I

TABLE I

DASH NO.	ARC PART NO.
201	UG-584/U-1

SIZE	FSCM NO.	DWG NO.	REV
A	56232	1217817	-

SCALE NONE SHEET 3 OF 5

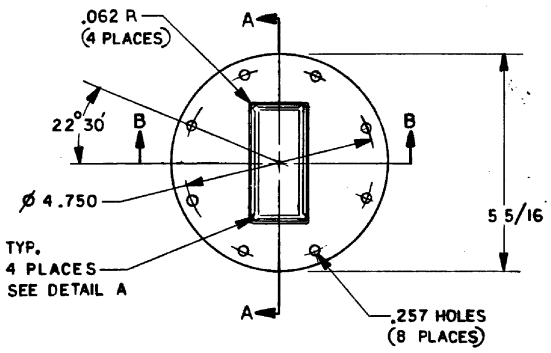

FIGURE 1
CONFIGURATION DASH 201

SIZE	FSCM NO.	DWG NO.	REV
A	56232	1217817	-

SCALE NONE SHEET 4 OF 5

PRINTED BY:IM, NEXRAD (nexradim) DO NOT SCALE DRAWING DATE PRINTED:11/13/2025 12:19:15 PM PST