REV	DESCRIPTION	DATE	APPROVED
A	DASH 302 CONFIGURATION ADDED ECP MOD 243 C.O. F052659 (NA)	9-27-96	
B	ECP MOD 243 C.O. F05541 (M)	94/1235	MCD
B	REMOVED GASKET GROOVE CCB 24-00007 ECO A10568 (NA)	240711	G. JIM

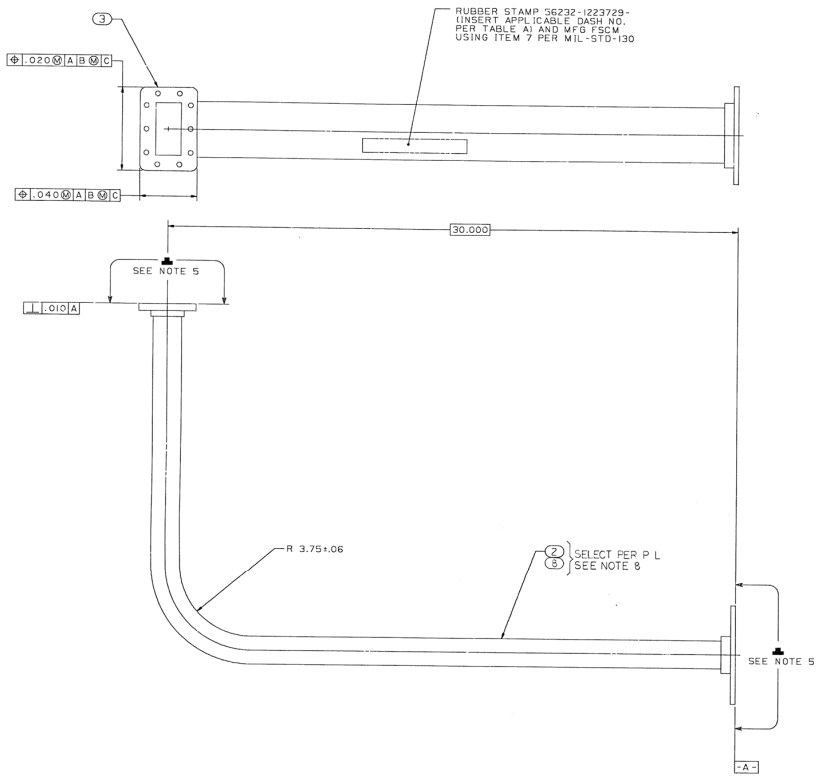

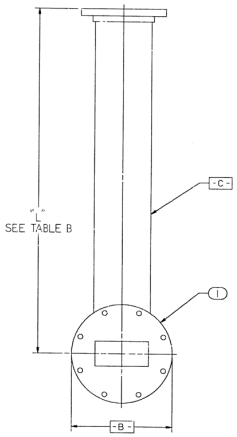

NOTES- UNLESS OTHERWISE SPECIFIED:

1. REMOVE BURRS AND SHARP EDGES.
2. SURFACE ROUGHNESS AS ROLLED OR DRAWN. PUNCHED, CUT OR MACHINED SURFACES TO HAVE 125√.
3. CHEMICAL FILM TREATMENT PER MIL-C-5541, CLASS 3.
4. APPLY PAINT SYSTEM PER MIL-STD-1303(OS) EXCEPT USING 1 COAT OF ITEM 5 AND 2 COATS OF ITEM 6.
5. OMIT PAINT SYSTEM FROM ALL HOLES AND SURFACES INDICATED BY ▲.
6. HERMETICITY: THE UNIT WITH ENDS SEALED MUST WITHSTAND A MAXIMUM DROP IN AIR PRESSURE OF 0.2 PSIG IN 5 MINUTES FROM AN INITIAL PRESSURE OF 7 PSIG, AFTER REMOVAL OF THE SOURCE OF AIR PRESSURE.
7. DISCONTINUITY: THE MAXIMUM ALLOWABLE STEP OR DISCONTINUITY ALONG INNER WAVEGUIDE SURFACES AT ALL JOINTS SHALL BE .010 EXCEPT WHERE RELATED TO MATCHING SURFACES.
8. BRAZE PER MIL-STD-454, REQUIREMENT 59 USING ITEM 4, QUALITY PER MIL-B-7883, GRADE B.
9. WORKMANSHIP PER MIL-STD-454, REQUIREMENT 9.
10. THE PART NUMBER IS THE DRAWING NUMBER SUFFIXED WITH THE APPLICABLE DASH NUMBER SHOWN IN TABLE A.

TABLE B

DASH NO.	"L"
301	18.69
302	14.50

TABLE A

DASH NO.	APPLICABLE INFORMATION
301	SHEET 1
302	SHEET 1

INTERPRET DRAWING PER DOD-STD-100

SEE SEPARATE PARTS LIST

UNLESS OTHERWISE SPECIFIED DIMENSIONS ARE IN INCHES TOLERANCES ON
2 PLACE DEC ±.02
3 PLACE DEC ±.010
ANGLES
MATERIAL

CONTRACT SO-DMNW-8-00032

DWN K.CHI 53-2-17 REV 10-14-1
CHK STD
APVD FOR PARAMAX DATE
APVD FOR GOVT

PARAMAX SYSTEMS CORPORATION
SYSTEMS DEVELOPMENT
GREAT NECK, N.Y. 11020-1696

WAVEGUIDE ASSY

SIZE E CAGE CODE 56232 DWG NO. 1223729 REV C
SCALE 1/2 SHEET

1223757 NXRD
NEXT ASSY USED ON
APPLICATION

1223729-302

Revision • B F05541
Part • WAVEGUIDE ASSY, 1WG23 (MEDFORD) •
Effective From: **11/30/1994 09:00:00 PM PST** to
...

Production

Unincorporated

BOM

Effective From: 11/30/1994 09:00:00 PM PST **To:**

Level	Part Number	Item	Qty	U/M	Nomenclature	Ref Des	Cage	Drawing Number	Rev	Notes	Sites
.1	1217817-201	1	1.00	EACH	FLANGE, WAVEGUIDE		56232	1217817	- AGL1217817-		
.1	1215155-101	3	1.00	EACH	FLANGE,WAVEGUIDE		56232	1215155	A A10186		
.1	655-CLFS-BALSI-4	4	1.00	EACH	BRAZING FILLER METAL		81348	QQ-B-655	- AGL655-CLFS-BALSI-4-		
.1	1757-CLRY	5	1.00	EACH	PRIMER COATING		81348	TT-P-1757	- AGL1757-CLRY-		
.1	527-CLR30372	6	1.00	EACH	ENAMEL,ALKYD,LUSTERLESS		81348	TT-E-527	- AGL527-CLR30372-		
.1	43553-TYIBK	7	1.00	EACH	MARKING INK EPOXY		81349	MIL-I-43553	- AGL43553-TYIBK-		
.1	1223729-102	8	1.00	EACH	M85/1-042-043		56232	1223729	- AGL1223729-102-		
.1	1303	702	1.00	EACH	PAINTING OF NAVAL EQUIP		96906	MIL-STD-1303	- AGL1303-		
.1	276-MTHDB	703	1.00	EACH	IMPREGNATION OF POROUS CASTING		96906	MIL-STD-276	- AGL276-MTHDB-		
.1	454-RQ9	704	1.00	UW	WORKMANSHIP		96906	MIL-STD-454	- AGL454-RQ9-_DUP1		
.1	454-RQ59	705	1.00	EACH	BRAZING		96906	MIL-STD-454	- AGL454-RQ59-		
.1	5541-CL3, TYPE II	706	1.00	UW	CHEMICAL CONVERSION COATING		81349	MIL-DTL-5541	- AGL5541-CL3-_DUP1		
.1	7883-GRB	707	1.00	EACH	BRAZING QUALITY		81349	MIL-B-7883	- AGL7883-GRB-		
.1	DOD-STD-100	708	1.00		ENGINEERING DRAWING PRACTICES		96906		C AGLDOD-STD-100C		
.1	MIL-STD-130	709	1.00	UW	IDENTIFICATION MARKING		96906	MIL-STD-130	G AGLMIL-STD-130G		

PRINTED BY:IM, NEXRAD (nexradim) DO NOT SCALE DRAWING DRAWING PRINTED:06/15/2026 01:00:50 PM PDT

APPLICATION

NHA	USED ON	LTR	DATE	CO	ECP	O/A	REVISION DESCRIPTION	APVD
MULTI	NEXRAD							

SPECIFICATION CONTROL DRAWING

CONTR NO. 50-DMNW-8-00032

UNISYS CORPORATION
SHIPBOARD AND GROUND SYSTEMS GROUP
GREAT NECK, NY 11020

NOMENCLATURE
FLANGE, WAVEGUIDE

RELEASE DATE
APVD DATE
DWN WP 90-4-6 CHK JB 90-4-13
QA VD 5-14-90 ENGRG RAG 90-4-16
STD EC 5/4/90 MFG DD 90-4-17
R/M

SIZE	FSCM NO.	DWG NO.	REV
A	56232	1217817	-

SCALE NONE SHEET 1 OF 5

1. GENERAL

1.1 INTERPRET DRAWING IN ACCORDANCE WITH DOD-STD-100

1.2 IDENTIFICATION OF THE SUGGESTED SOURCE(S) OF SUPPLY HEREON IS NOT TO BE CONSTRUED AS A GUARANTEE OF PRESENT OR CONTINUED AVAILABILITY AS A SOURCE OF SUPPLY FOR THE ITEM(S).

2. REQUIREMENTS: PER MILITARY SPECIFICATION MIL-F-3922/56 FOR MILITARY PART NUMBER M3922/56-002, UG584/U, MODIFIED AS A BUTT TYPE FLANGE.

2.1 PHYSICAL CONFIGURATION: SEE FIGURE 1

2.2 ITEM IDENTIFICATION: VENDOR IDENTIFICATION AND VENDOR PART NUMBER TO BE APPLIED BY VENDOR PER MIL-STD-130.

SIZE	FSCM NO.	DWG NO.	REV
A	56232	1217817	-

SCALE NONE SHEET 2 OF 5

SUGGESTED SOURCE(S) OF SUPPLY:

AMERICAN RADAR COMPONENTS, INC FSCM 00792
DENVILLE, NJ
PART NO.: SEE TABLE I

TABLE I

DASH NO.	ARC PART NO.
201	UG-584/U-1

SIZE	FSCM NO.	DWG NO.	REV
A	56232	1217817	-

SCALE NONE SHEET 3 OF 5

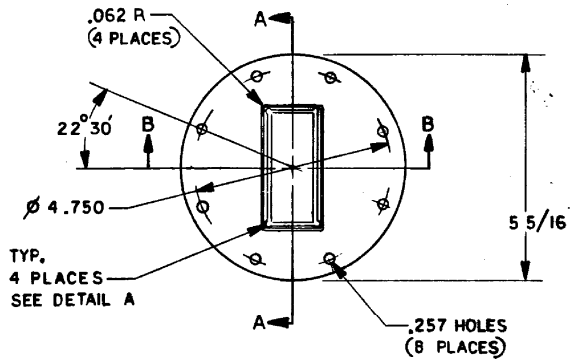

FIGURE 1
CONFIGURATION DASH 201

SIZE	FSCM NO.	DWG NO.	REV
A	56232	1217817	-

SCALE NONE SHEET 4 OF 5

NUMBER:1217817 PROPERTY OF THE U.S. GOVERNMENT (NATIONAL WEATHER SERVICE) STATUS:Production