U.S. DEPARTMENT OF AGRICULTURE
FOREST SERVICE, REGION 6

CONSTRUCTION PLANS FOR:

NINEMILE CREEK BRIDGE DESIGN

AS PART OF DISASTER RELIEF

ROAD 6500000, MP 6.674

NINEMILE CREEK
STRUCTURE NO: 061707000037202
LATITUDE: 47.862927
LONGITUDE: -121.975139

WENATCHEE RIVER RANGER DISTRICT
OKANOGAN-WENATCHEE NATIONAL FOREST
CHELAN COUNTY, WASHINGTON

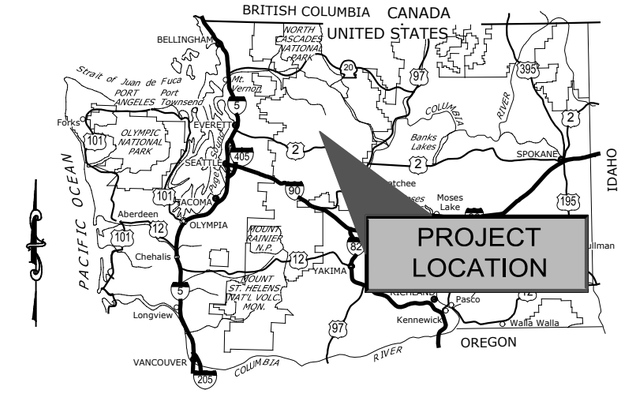

INDEX TO SHEETS

NO.	DESCRIPTION
1	COVER
2	SUMMARY OF ESTIMATED QUANTITIES
3	GENERAL NOTES
4	PROJECT CONTROL
5	TYPICAL SECTIONS
6 - 7	ROAD PLAN & PROFILE
8	BRIDGE GENERAL LAYOUT
9	STRUCTURE EXCAVATION
10	FOUNDATION PLAN
11 - 12	RIPRAP PLAN
13 - 14	BORING LOGS
15 - 17	ABUTMENT PLAN, ELEVATION, & DETAILS
18 - 22	SUPERSTRUCTURE PLAN & DETAILS
23 - 26	STREAM SIMULATION DESIGN & DETAILS
27	TRAFFIC CONTROL
XS1 - XS5	ROAD CROSS SECTIONS

MATERIAL SOURCES

GOVERNMENT FURNISHED
STREAM SIMULATION MATERIAL
CONTRACTOR FURNISHED
WASTE SITE
STRUCTURAL BACKFILL
RIPRAP
AGGREGATE BASE, SUBBASE, & SURFACE COURSE

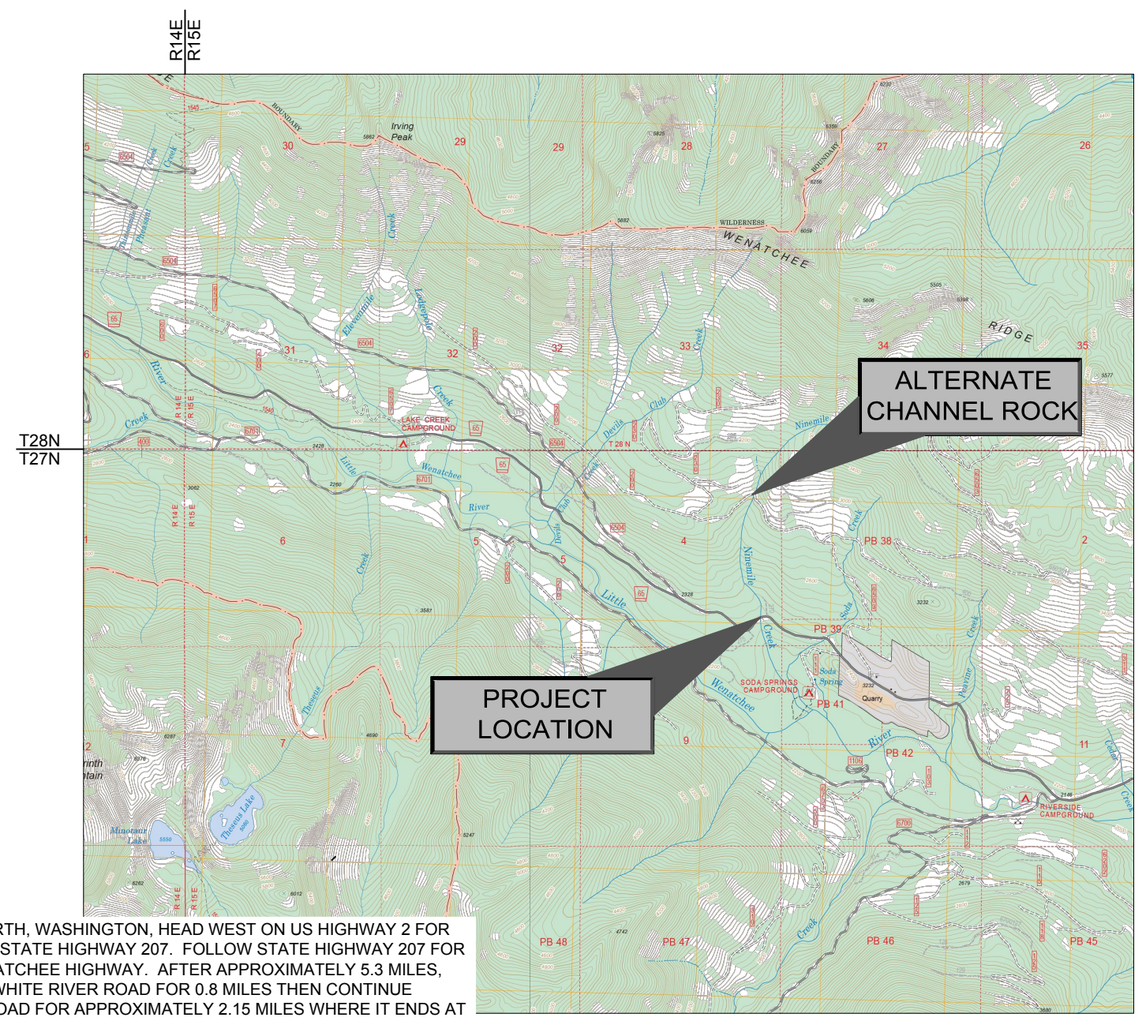

VICINITY MAP

TRAVEL DIRECTIONS: TO ACCESS THE PROJECT AREA FROM LEAVENWORTH, WASHINGTON, HEAD WEST ON US HIGHWAY 2 FOR APPROXIMATELY 15.1 MILES THEN RUN NORTH (RIGHT) ON WASHINGTON STATE HIGHWAY 207. FOLLOW STATE HIGHWAY 207 FOR APPROXIMATELY 4.4 MILES THEN CONTINUE STRAIGHT ON TO LAKE WENATCHEE HIGHWAY. AFTER APPROXIMATELY 5.3 MILES, LAKE WENATCHEE HIGHWAY TURNS INTO WHITE RIVER ROAD. FOLLOW WHITE RIVER ROAD FOR 0.8 MILES THEN CONTINUE STRAIGHT ON LITTLE WENATCHEE ROAD. FOLLOW LITTLE WENATCHEE ROAD FOR APPROXIMATELY 2.15 MILES WHERE IT ENDS AT THE FOREST SERVICE GATE THEN THE ROAD FROM THE GATE ON BECOMES LITTLE WENATCHEE RIVER ROAD (FOREST ROAD 6500). FOLLOW FOREST ROAD 6500 FOR APPROXIMATELY 4.79 MILES TO THE JUNCTION OF THE 6500 AND 6700 ROADS THEN CONTINUE STRAIGHT ON FOREST ROAD 6500 FOR APPROXIMATELY 1.884 MILES TO THE NINEMILE CREEK CROSSING.

APPROVED:

TARA UMPHRIES — Digitally signed by TARA UMPHRIES Date: 2026.03.25 16:20:37 -07'00'

FOREST SUPERVISOR — DATE
OKANOGAN-WENATCHEE NATIONAL FOREST

RECOMMENDED:

ERICA TAECKER — Digitally signed by ERICA TAECKER Date: 2026.03.25 15:48:51 -07'00'

DISTRICT RANGER — DATE
WENATCHEE RIVER RANGER DISTRICT

MOLLY HANSEN — Digitally signed by MOLLY HANSEN Date: 2026.03.25 11:03:15 -07'00'

Asst. FOREST ENGINEER — DATE
OKANOGAN-WENATCHEE NATIONAL FOREST

RO SIGNATURES:

TECHNICAL REVIEW:

Kathryn L. Van Hecke, PE — Digitally signed by Kathryn L. Van Hecke, PE Date: 2026.03.26 16:33:56 -07'00'

REGIONAL BRIDGE ENGINEER — DATE
PACIFIC NORTHWEST REGION

APPROVED BY:

AARON CARPENTER — Digitally signed by AARON CARPENTER Date: 2026.04.02 17:17:56 -07'00'

DIRECTOR OF ENGINEERING — DATE
PACIFIC NORTHWEST REGION

AMMON SCOTT GROESBECK
STATE OF WASHINGTON
21028285
REGISTERED
PROFESSIONAL ENGINEER
3/18/2026

R34904

DJ&A
ENGINEERS
PLANNERS
SURVEYORS

3/18/26 10:40 PATRICIA.DONNER C:\DJA-PW\WORK\DJA-PROD\DMS53770\7333.30 COVERS.DWG;

BASE SCHEDULE

ITEM NO.	ITEM DESCRIPTION	MEASUREMENT		QTY	COMMENTS
		METHOD	UNIT		
15101	MOBILIZATION	LSQ	LUMP SUM	ALL	INCLUDES TRAFFIC CONTROL.
15201	CONSTRUCTION SURVEY AND STAKING, METHOD 1, TOLERANCE A	LSQ	LUMP SUM	ALL	LICENSED WASHINGTON STATE SURVEYOR REQUIRED
15401	CONTRACTOR TESTING	LSQ	LUMP SUM	ALL	
15713	SOIL EROSION & POLLUTION CONTROL	LSQ	LUMP SUM	ALL	INCLUDES DEWATERING AND FISH SALVAGE. SEE GENERAL NOTES SHEET 25.
20302	REMOVAL OF EXISTING CULVERT, DISPOSAL METHOD A	AQ	EACH	1	REMOVE OFF NATIONAL FOREST LANDS.
20304	REMOVAL OF EXISTING ASPHALT CONCRETE PAVEMENT, DISPOSAL METHOD A	CQ	SQUARE YARD	1230	REMOVE OFF NATIONAL FOREST LANDS.
20407	ROAD EXCAVATION	CQ	CUBIC YARD	145	IN PLACE QUANTITY, NOT ADJUSTED FOR SHRINK/SWELL.
20801A	STRUCTURE EXCAVATION	CQ	CUBIC YARD	100	SEE SHEET 9.
20801B	CHANNEL EXCAVATION	CQ	CUBIC YARD	850	SEE SHEETS 23-24.
20803	STRUCTURAL BACKFILL	CQ	CUBIC YARD	95	IN PLACE QUANTITY, NOT ADJUSTED FOR SHRINK/SWELL. COMMERCIAL SOURCE, CERTIFIED WEED FREE.
25101	PLACED RIPRAP, CLASS 3	CQ	CUBIC YARD	145	IN PLACE QUANTITY, NOT ADJUSTED FOR SHRINK/SWELL. COMMERCIAL SOURCE, CERTIFIED WEED FREE.
27201	GEOCELL ABUTMENT STABILIZATION, 6" DEPTH	CQ	SQUARE YARD	35	INCLUDES CONTRACTOR FURNISHED COARSE GRANULAR BACKFILL AND GEOTEXTILE.
30202	AGGREGATE BASE, METHOD 2	CQ	TON	225	IN PLACE QUANTITY, NOT ADJUSTED FOR SHRINK/SWELL. COMMERCIAL SOURCE, CERTIFIED WEED FREE. WSDOT 5/8" MINUS ACCEPTABLE SUBSTITUTE
30205	SUBBASE, METHOD 2	CQ	TON	485	IN PLACE QUANTITY, NOT ADJUSTED FOR SHRINK/SWELL. COMMERCIAL SOURCE, CERTIFIED WEED FREE. WSDOT 3" MINUS ACCEPTABLE SUBSTITUTE
40304	ASPHALT CONCRETE, WSDOT, TYPE II	CQ	TON	250	
55220A	PRECAST CONCRETE MEMBER, GRADE BEAM	AQ	EACH	2	INCLUDES REINFORCING STEEL.
55220B	PRECAST CONCRETE MEMBER, WINGWALL	AQ	EACH	4	INCLUDES REINFORCING STEEL.
55301A	PRECAST, PRESTRESSED CONCRETE MEMBER, 30" SLAB, 80' LONG	AQ	EACH	3	ODOT BR422 & BR445
55301B	PRECAST, PRESTRESSED CONCRETE MEMBER, 30" SLAB, 80' LONG W/ CURB	AQ	EACH	2	ODOT BR422 & BR445
60202	71 INCH SPAN, 47 INCH RISE, PIPE CULVERT, CMP GALVANIZED THICKNESS 0.109 INCH MINIMUM	CQ	LINEAR FOOT	42	INCLUDES BEDDING & BACKFILL MATERIAL
62552	SEEDING & MULCHING, DRY METHOD	LSQ	LUMP SUM	ALL	CONTRACTOR FURNISHED SEED. RE-SEED ALL AREAS DISTURBED BY CONSTRUCTION ACTIVITIES. MULCH & STRAW MUST BE FROM AN APPROVED WEED-FREE SOURCE.
63304A	SIGN, 25 MPH CURVE WARNING PANEL, TYPE III, IV, IX, XI, RETROREFLECTIVE SHEETING	AQ	EACH	2	POSTS, HARDWARE, AND INSTALLATION INDIRECT TO THIS BID ITEM. 25 MPH CURVE WARNING SIGN, W1-2A
63304B	SIGN, ONE LANE BRIDGE PANEL, TYPE III, IV, IX, XI, RETROREFLECTIVE SHEETING	AQ	EACH	2	POSTS, HARDWARE, AND INSTALLATION INDIRECT TO THIS BID ITEM. ONE LANE BRIDGE, W5-3
63307	OBJECT MARKER, TYPE 3	AQ	EACH	4	POSTS, HARDWARE, AND INSTALLATION INDIRECT TO THIS BID ITEM.
64801	PLACED STREAMBED SIMULATION MATERIAL, BED CLASS 2, METHOD A	CQ	CUBIC YARD	50	MATERIAL TO BE SALVAGED FROM EXCAVATION. NOTIFY CO AT LEAST FIVE (5) DAYS PRIOR TO PERFORMING THE WORK AND AFTER MATERIAL SALVAGE IS COMPLETE. PLACE AT DIRECTION OF CO.
64803	PLACED CHANNEL ROCK FOR BANK MARGINS AND ROCK STRUCTURES, CLASS CR-0, METHOD A	CQ	CUBIC YARD	95	MATERIAL TO BE SALVAGED FROM EXCAVATION. NOTIFY CO AT LEAST FIVE (5) DAYS PRIOR TO PERFORMING THE WORK AND AFTER MATERIAL SALVAGE IS COMPLETE.

OPTION ITEMS

ITEM NO.	ITEM DESCRIPTION	MEASUREMENT		QTY	COMMENTS
		METHOD	UNIT		
62201	EQUIPMENT RENTAL, HYDRAULIC EXCAVATOR WITH THUMB	AQ	HOUR	24	INCLUDES CHANNEL ROCK, ROOTWAD, AND STREAMBED FEATURE PLACEMENT AND ADJUSTMENTS, AND MISCELLANEOUS ITEMS AS DIRECTED BY THE CO.

AQ = ACTUAL QUANTITY LSQ = LUMP SUM QUANTITY CQ = CONTRACT QUANTITY (SEE SECTION 109.02(B) OF THE STANDARD SPECIFICATIONS)

United States Department of Agriculture
Forest Service

REGION 6
PACIFIC NORTHWEST REGION

PROJECT NAME

NINEMILE CREEK BRIDGE DESIGN

RD 6500000 MP 6.674

STRUCTURE NO. 061707000037202

OKANOGAN-WENATCHEE NATIONAL FOREST

WENATCHEE RIVER RANGER DISTRICT

DRAWING TITLE

SUMMARY OF ESTIMATED QUANTITIES

DATE MAR-26

ARCHIVE NO. R34904

DESIGNER P.DONNER

DRAWN P. DONNER

CHECKED A. GROESBECK

PROJECT NO. 7333.30

DWG SHEET NO. 2

3/18/26 14:58 AMMON C:\DJA-PW\WORK\DJA-PROD\DMS53764\7333.30 NINEMILE CREEK BRIDGE - DESIGN.DWG;

GENERAL NOTES

BRIDGE DESIGN: STRUCTURES ARE DESIGNED FOR HL-93 LOADING IN ACCORDANCE WITH AASHTO LRFD BRIDGE DESIGN SPECIFICATIONS, 9TH EDITION WITH CURRENT INTERIMS.

SEISMIC: SEISMIC PARAMETERS PER GEOTECHNICAL REPORT

SITE CLASS =	D	
PGA =	0.220 G	PEAK GROUND ACCELERATION
SS =	0.504	HORIZONTAL RESPONSE SPECTRAL ACCELERATION COEFFICIENT AT 0.2-SEC PERIOD
S1 =	0.167	HORIZONTAL RESPONSE SPECTRAL ACCELERATION COEFFICIENT AT 1-SEC PERIOD
FPGA =	1.361	SITE FACTOR AT ZERO-PERIOD RANGE OF ACCELERATION RESPONSE SPECTRUM
FA =	1.397	SITE FACTOR FOR SHORT-PERIOD RANGE OF ACCELERATION RESPONSE SPECTRUM
FV =	2.132	SITE FACTOR FOR LONG-PERIOD RANGE OF ACCELERATION RESPONSE SPECTRUM
SDS =	0.704	HORIZONTAL RESPONSE SPECTRAL ACCELERATION COEFFICIENT AT 0.2-S PERIOD MODIFIED BY SHORT-PERIOD SITE FACTOR
SD1 =	0.356	HORIZONTAL RESPONSE SPECTRAL ACCELERATION COEFFICIENT MODIFIED BY LONG-PERIOD SITE FACTOR
AS =	0.299	PEAK SEISMIC GROUND ACCELERATION COEFFICIENT MODIFIED BY SHORT-PERIOD SITE FACTOR
SEISMIC ZONE =	3	SEISMIC ZONE PER AASHTO TABLE 3.10.6-1

GEOTECHNICAL PARAMETERS: SUBSTRUCTURES ARE DESIGNED IN ACCORDANCE WITH THE RECOMMENDATIONS PROVIDED IN THE PROJECT GEOTECHNICAL REPORT (SHANNON & WILSON, INC. PROJECT NUMBER 113461-001, DECEMBER 2025). SEE SHEET 10 OF THIS PLAN SET FOR THE REQUIRED BEARING RESISTANCE.

SPECIFICATIONS: CONSTRUCT THE PROJECT IN COMPLIANCE WITH FEDERAL HIGHWAY ADMINISTRATION STANDARD SPECIFICATIONS FOR CONSTRUCTION OF ROAD AND BRIDGES ON FEDERAL HIGHWAY PROJECTS (FP-14) AND APPLICABLE FOREST SERVICE SUPPLEMENTAL SPECIFICATIONS (FSSS).

WILDLIFE FIELD WORK RESTRICTIONS: NO FIELD WORK PRIOR TO AUGUST 1 FOR NORTHERN SPOTTED OWL UNLESS APPROVED IN WRITING BY THE CONTRACTING OFFICER (CO).

DEWATERING & EROSION CONTROL PLAN: SUBMIT A DEWATERING AND SOIL EROSION AND SEDIMENT CONTROL PLAN TO THE CONTRACTING OFFICER FOR APPROVAL AT LEAST THIRTY (30) DAYS PRIOR TO BEGINNING WORK. SEE SECTION 157 OF THE SUPPLEMENTAL SPECIFICATIONS FOR DETAILS. CONSTRUCT TEMPORARY MEANS TO DIVERT THE FLOW OF THE LIVE STREAM AS NECESSARY TO PERFORM WORK. DO NOT ALLOW WATER FROM EXCAVATIONS TO FLOW DIRECTLY INTO THE LIVE STREAM.

TEMPORARY TRAFFIC CONTROL: SUBMIT A TEMPORARY TRAFFIC CONTROL PLAN TO THE CONTRACTING OFFICER FOR APPROVAL AT LEAST THIRTY (30) DAYS PRIOR TO INTENDED USE.

EQUIPMENT STORAGE: STORAGE OF ALL EQUIPMENT ON GOVERNMENT LANDS WILL BE AT A LOCATION APPROVED BY THE CO. IF CONTRACTOR ELECTS TO CAMP NEAR THE EQUIPMENT, OR NEARBY ON THE FOREST, A CAMPING PERMIT IS REQUIRED PRIOR TO CAMPING.

IN-STREAM WORK: ONLY CONDUCT IN-STREAM WORK BETWEEN JULY 1ST AND SEPTEMBER 30TH, HOWEVER ONSITE WORK CAN NOT BEGIN PRIOR TO THE WILDLIFE FIELD RESTRICTIONS WITHOUT USFS APPROVAL.

FISH SALVAGE: FISH SALVAGE IS THE RESPONSIBILITY OF THE CONTRACTOR AND SHALL BE COMPLETED IN ACCORDANCE WITH APPENDIX A OF THE FSSS. SUBMIT A FISH SALVAGE PLAN TO THE CO FOR APPROVAL AT LEAST THIRTY (30) DAYS PRIOR TO BEGINNING THE WORK. NOTIFY THE CO AT LEAST FIVE (5) BUSINESS DAYS PRIOR TO PERFORMING THE WORK AND IMMEDIATELY AFTER FISH SALVAGE IS COMPLETE. ALLOWANCE SHALL BE GIVEN TO THE FOREST SERVICE AND WASHINGTON DEPARTMENT OF FISH AND WILDLIFE TO OBSERVE AND DIRECT ALL SALVAGE OPERATIONS.

DISPOSAL: ALL MATERIALS DESIGNATED FOR REMOVAL BECOME THE PROPERTY OF THE CONTRACTOR AND ARE TO BE DISPOSED OF BY REMOVING FROM THE FOREST IN AN ENVIRONMENTALLY SAFE MANNER IN ACCORDANCE WITH ALL LOCAL, STATE AND FEDERAL REQUIREMENTS. DISPOSE OF EXCESS OR UNSUITABLE MATERIAL OFF USFS LAND PER FSSS, SECTION 105. HAULING OF EXCESS OR UNSUITABLE MATERIAL IS INDIRECT TO ASSOCIATED WORK.

MATERIAL NOTES

CONCRETE: USE CLASS A(AE) OR P(AE) CONCRETE FOR ALL CAST-IN-PLACE AND PRECAST, NON-PRESTRESSED CONCRETE WITH A MINIMUM OF F'C = 4500 PSI AT TWENTY-EIGHT (28) DAYS AND AN ENTRAINED AIR CONTENT IN ACCORDANCE WITH SECTION 552.

USE CLASS "P" PRESTRESSED CONCRETE WITH STRENGTH REQUIREMENTS AS DETERMINED BY THE PRESTRESSED SLAB FABRICATOR, EXCEPT AS FOLLOWS. THE MINIMUM TWENTY-EIGHT (28) DAY COMPRESSIVE STRENGTH IS 5500 PSI (F'C = 5500 PSI) AND THE MINIMUM COMPRESSIVE STRENGTH AT TRANSFER OF PRESTRESS FORCE IS 4500 PSI (F'C = 4500 PSI). AS MINIMUM, USE CONCRETE WITH AN ENTRAINED AIR CONTENT OF 5% ±1% IN THE TOP TWO INCHES OF THE PRESTRESSED SLAB.

SEE SLAB SCHEDULE, SHEETS 18-22 FOR PRESTRESSED SLAB SPECIFICATIONS AND DETAILS.

SUBMIT MIX DESIGN FOR CONCRETE IN ACCORDANCE WITH FP-14. CHAMFER ALL EXPOSED EDGES OF CONCRETE 3/4" AND FILLET ALL ACUTE ANGLES 3/4" UNLESS OTHERWISE NOTED.

REINFORCING STEEL: USE NON-PRESTRESSED REINFORCING OF THE DEFORMED TYPE CONFORMING TO AASHTO M31 (ASTM A615), GRADE 60. CONCRETE COVER SHALL BE AS SHOWN; WHERE NOT SHOWN IT SHALL CONFORM TO AASHTO. CUT AND BEND STEEL IN ACCORDANCE WITH ACI SP-66. EPOXY COATED REINFORCING IS NOT REQUIRED.

PRESTRESSING STEEL: USE PRESTRESSING STEEL OF LOW-RELAXATION PRESTRESSING STRAND CONFORMING TO AASHTO M203, GRADE 270.

HARDWARE AND STRUCTURAL STEEL: USE STEEL SHAPES, PLATES AND BARS MEETING THE REQUIREMENTS OF ASTM A36. GALVANIZE ALL STEEL IN ACCORDANCE WITH AASHTO M111 (ASTM A123) EXCEPT WHEN COVERED BY 1 INCH OR MORE OF CONCRETE. USE HARDWARE MEETING THE REQUIREMENTS OF ASTM A307 EXCEPT AS NOTED. GALVANIZE HARDWARE IN ACCORDANCE WITH AASHTO M232 (ASTM A153) UNLESS COVERED BY 1 INCH OR MORE OF CONCRETE.

INSTALLATION OF PRESTRESSED SLABS: ERECT PRESTRESSED CONCRETE SLABS WITH VERTICAL TOLERANCES PER 553-1. IMMEDIATELY PRIOR TO SETTING BEARING PADS AND SLABS, MIX AND PLACE NON SHRINK GROUT UNDER BEARING PADS (MAX 1/2 INCH). ENSURE UNIFORM AND COMPLETE CONTACT OF SLABS ON BEARING PADS (NO "ROCKING" OR VISIBLE GAP). IF UNIFORM BEARING IS NOT ACHIEVED, LIFT SLAB AND REPEAT PROCEDURE. ANY EXCESS GROUT PROTRUDING ABOVE BOTTOM OF BEARING PADS SHALL BE REMOVED IMMEDIATELY AFTER PLACING SLABS.

FABRICATION DRAWINGS: SUBMIT FABRICATION DRAWINGS FOR ALL PRECAST & PRESTRESSED MEMBERS TO THE CO, FOR REVIEW, A MINIMUM OF THIRTY (30) DAYS PRIOR TO FABRICATION.

USDA FOREST SERVICE

United States Department of Agriculture
Forest Service

REGION 6
PACIFIC NORTHWEST REGION

PROJECT NAME
NINEMILE CREEK BRIDGE DESIGN

RD 6500000 MP 6.674

STRUCTURE NO.
061707000037202

OKANOGAN-WENATCHEE NATIONAL FOREST

WENATCHEE RIVER RANGER DISTRICT

DRAWING TITLE
GENERAL NOTES

DATE
MAR-26

ARCHIVE NO.
R34904

DESIGNER
P.DONNER

DRAWN
P. DONNER

CHECKED
A. GROESBECK

PROJECT NO.
7333.30

DWG SHEET NO.
3

SHEET 3 OF 27

3/18/26 14:58 AMMON C:\DJA-PW\WORK\DJA-PROD\DMS5376\7333.30 NINEMILE CREEK BRIDGE - DESIGN.DWG

ROAD CENTERLINE POINTS

CENTERLINE POINTS				
POINT #	NORTHING	EASTING	ELEVATION	DESCRIPTION
7000	314757.12	1605894.56	2300.68	STA 1+40
7001	314771.06	1605880.21	2300.29	STA 1+60
7002	314778.89	1605872.16	2300.09	STA 1+71.23 PC
7003	314784.84	1605865.72	2299.96	STA 1+80
7004	314797.16	1605849.98	2299.72	STA 2+00
7005	314807.60	1605832.93	2299.56	STA 2+20
7006	314816.03	1605814.81	2299.40	STA 2+40
7007	314822.34	1605795.84	2299.24	STA 2+60
7008	314826.44	1605776.28	2299.07	STA 2+80
7009	314828.29	1605756.37	2298.95	STA 3+00
7010	314827.85	1605736.39	2298.97	STA 3+20
7011	314825.14	1605716.58	2299.13	STA 3+40
7012	314823.19	1605707.82	2299.22	STA 3+48.98 PC
7013	314803.82	1605630.20	2299.22	STA 4+28.98
7014	314802.53	1605625.03	2299.17	STA 4+34.31 PC
7015	314801.08	1605619.53	2299.10	STA 4+40
7016	314794.90	1605600.51	2298.69	STA 4+60
7017	314787.06	1605582.12	2297.99	STA 4+80
7018	314777.61	1605564.50	2297.00	STA 5+00
7019	314769.75	1605552.21	2296.16	STA 5+14.59 PT
7020	314766.69	1605547.75	2295.86	STA 5+20
7021	314763.36	1605542.90	2295.55	STA 5+25.88 PC
7022	314755.17	1605531.40	2294.85	STA 5+40
7023	314742.88	1605515.63	2294.00	STA 5+60
7024	314729.82	1605500.48	2293.30	STA 5+80
7025	314716.02	1605486.01	2292.76	STA 6+00
7026	314701.51	1605472.25	2292.37	STA 6+20
7027	314686.34	1605459.22	2292.13	STA 6+40
7028	314670.53	1605446.98	2292.05	STA 6+60
7029	314654.12	1605435.53	2292.12	STA 6+80
7030	314645.71	1605430.13	2292.17	STA 6+90
7031	314630.85	1605421.26		STA 7+07.31 PC

* CENTERLINE POINTS ARE AT PROFILE GRADE AT STATIONS SHOWN.

CULVERT LAYOUT POINTS

POINT TABLE				
POINT #	NORTHING	EASTING	ELEVATION	DESCRIPTION
6000	314842.16	1605745.66	2294.18	CULVERT INLET
6001	314800.16	1605745.66	2292.07	CULVERT OUTLET

* LAYOUT POINTS ARE THE CULVERT INVERT

LEGEND

EXISTING FEATURES

- EXISTING EDGE OF ASPHALT
- EXISTING CULVERT
- EXISTING EDGE OF WATER
- 3200 MAJOR CONTOUR (5')
- MINOR CONTOUR (1')

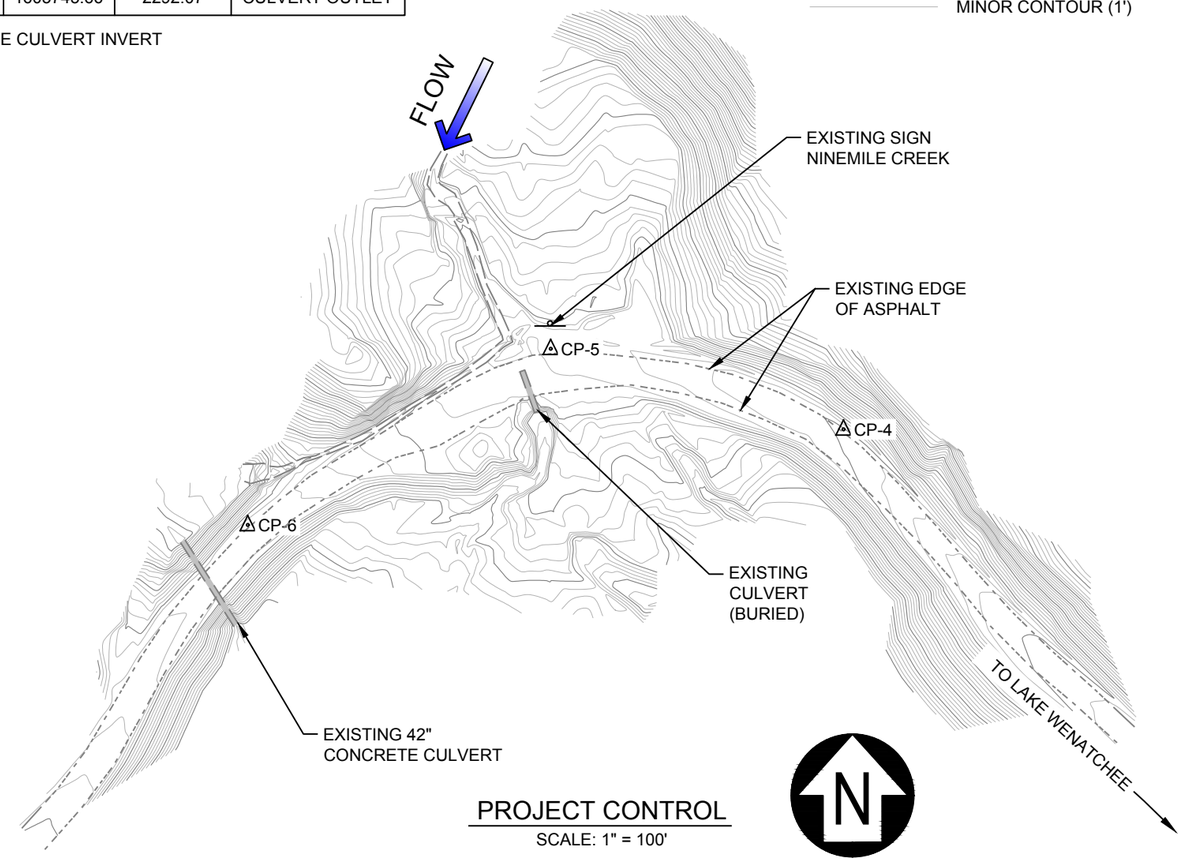

PROJECT CONTROL

SCALE: 1" = 100'

CONTROL POINTS

CONTROL POINT TABLE				
POINT #	NORTHING	EASTING	ELEVATION	DESCRIPTION
CP-4	314788.25	1605876.95	2300.32	SET RPC
CP-5	314841.41	1605683.67	2297.16	SET RPC
CP-6	314725.12	1605483.80	2291.38	SET RPC

RPC = REBAR WITH RED PLASTIC CAP SET BY DJ&A

DATE SURVEYED: 10/22/2024
COORDINATE SYSTEM: NAD83 (2011) WASHINGTON STATE PLANE
NORTH ZONE, NAVD88

ABUTMENT LAYOUT POINTS

POINT TABLE				
POINT #	NORTHING	EASTING	ELEVATION	DESCRIPTION
8000	314823.07	1605707.33	2293.43	ABUTMENT 1
8001	314803.94	1605630.68	2293.43	ABUTMENT 2

* LAYOUT POINTS ARE TO THE BOTTOM OF THE GRADE BEAM

United States Department of Agriculture
Forest Service

REGION 6
PACIFIC NORTHWEST REGION

PROJECT NAME

NINEMILE CREEK
BRIDGE DESIGN

RD 6500000 MP 6.674

STRUCTURE NO.
061707000037202

OKANOGAN-WENATCHEE
NATIONAL FOREST

WENATCHEE RIVER
RANGER DISTRICT

DRAWING TITLE

PROJECT
CONTROL

DATE
MAR-26

ARCHIVE NO.
R34904

DESIGNER
P.DONNER

DRAWN
P. DONNER

CHECKED
A. GROESBECK

PROJECT NO.
7333.30

DWG SHEET NO.
4

SHEET 4 OF 27

3/18/26 14:58 AMMON C:\DJA-PW\WORK\DJA-PROD\DMS53764\7333.30 NINEMILE CREEK BRIDGE - DESIGN.DWG;

LEGEND

EXISTING FEATURES

- EXISTING EDGE OF ASPHALT
- EXISTING CULVERT
- EXISTING EDGE OF WATER
- 3200 MAJOR CONTOUR (5')
- MINOR CONTOUR (1')

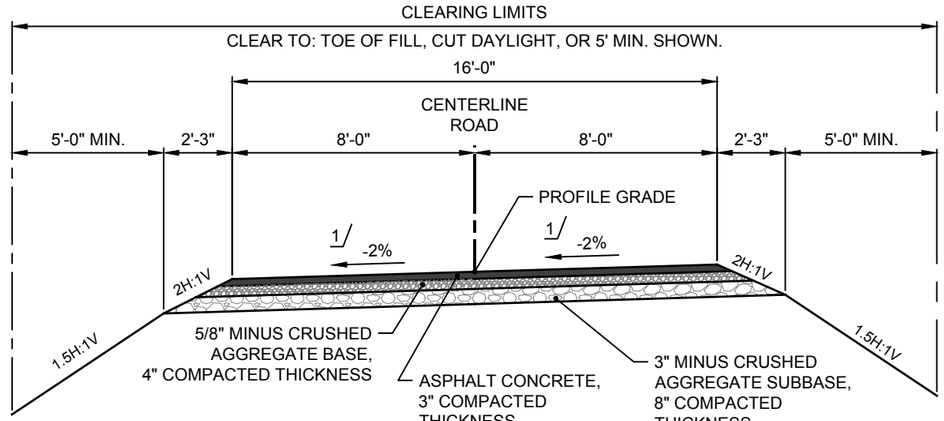

1/ CROSS SLOPES VARY. TRANSITION TO 1% CROWN AT BRIDGE.

STA 1+40 TO STA 3+48.98
STA 4+28.98 TO 5+60

ROAD TYPICAL SECTION

NOT TO SCALE

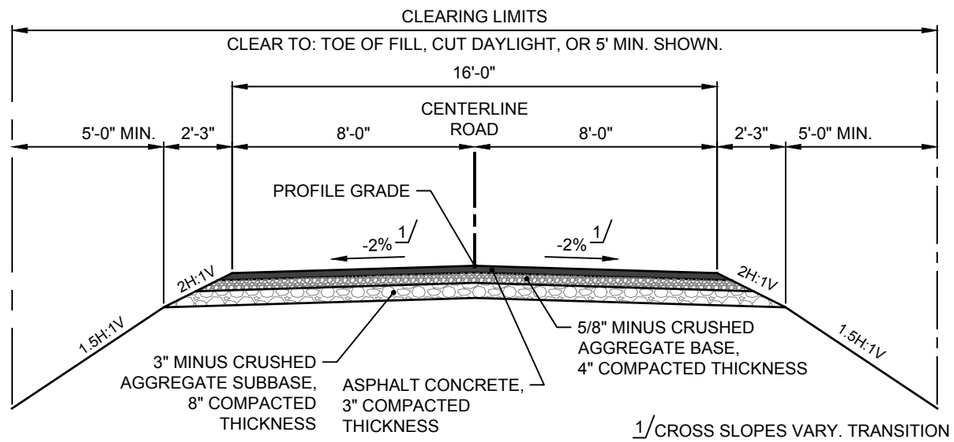

1/ CROSS SLOPES VARY. TRANSITION TO 1% SUPERELEVATION AT BRIDGE.

STA 5+60 TO STA 6+90

ROAD TYPICAL SECTION

NOT TO SCALE

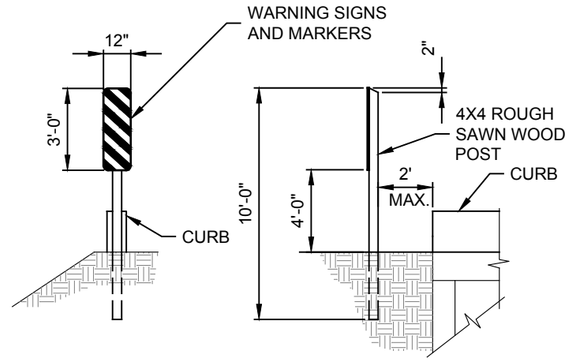

OBJECT MARKERS: USE 12"X 36" TYPE 3 OBJECT MARKERS COLORED YELLOW AND BLACK. USE MATERIAL MEETING MUTCD OM-3L OR OM-3R SPECIFICATIONS. FASTEN TO POST W/ (2) 1/4" Ø MACHINE BOLTS W/ WASHERS. FIELD DRILL BOLT HOLES. INSTALL POSTS SUCH THAT THE INSIDE EDGE OF THE REFLECTORIZED PANEL IS ON LINE WITH THE INSIDE EDGE OF THE CURB.

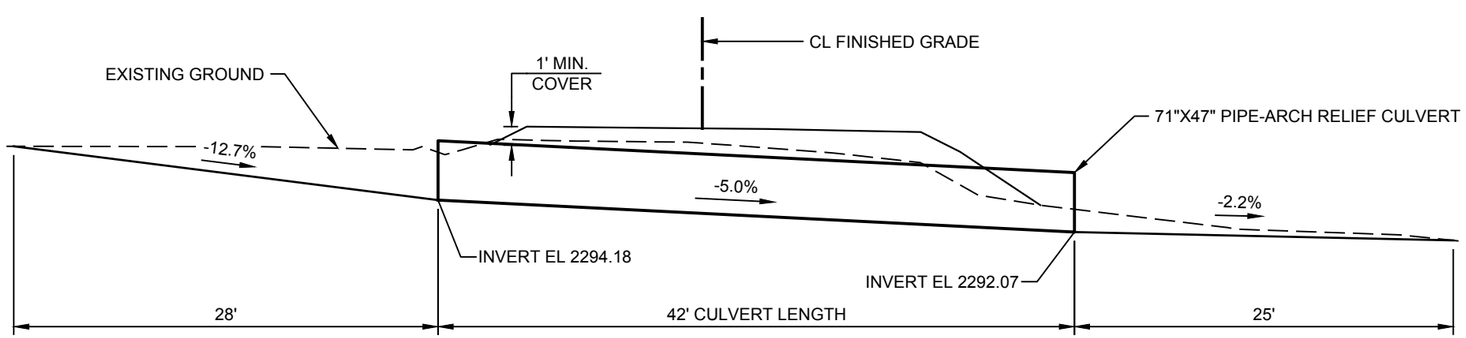

RELIEF CULVERT STA 3+10.62

NOT TO SCALE

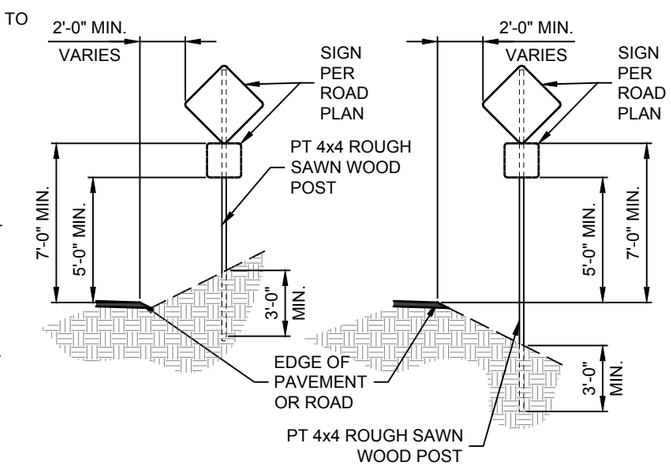

TYPICAL SIGN INSTALLATION

NOT TO SCALE

USDA FOREST SERVICE

United States Department of Agriculture
Forest Service

REGION 6
PACIFIC NORTHWEST REGION

PROJECT NAME

NINEMILE CREEK BRIDGE DESIGN

RD 6500000 MP 6.674

STRUCTURE NO. 061707000037202

OKANOGAN-WENATCHEE NATIONAL FOREST

WENATCHEE RIVER RANGER DISTRICT

DRAWING TITLE

TYPICAL SECTIONS

DATE MAR-26	
ARCHIVE NO. R34904	
DESIGNER P.DONNER	DWG SHEET NO. 5
DRAWN P. DONNER	
CHECKED A. GROESBECK	SHEET 5 OF 27
PROJECT NO. 7333.30	

3/18/26 14:58 AMMON C:\DJA-PW\WORK\DJA-PROD\DMS53764\7333.30 NINEMILE CREEK BRIDGE - DESIGN.DWG;

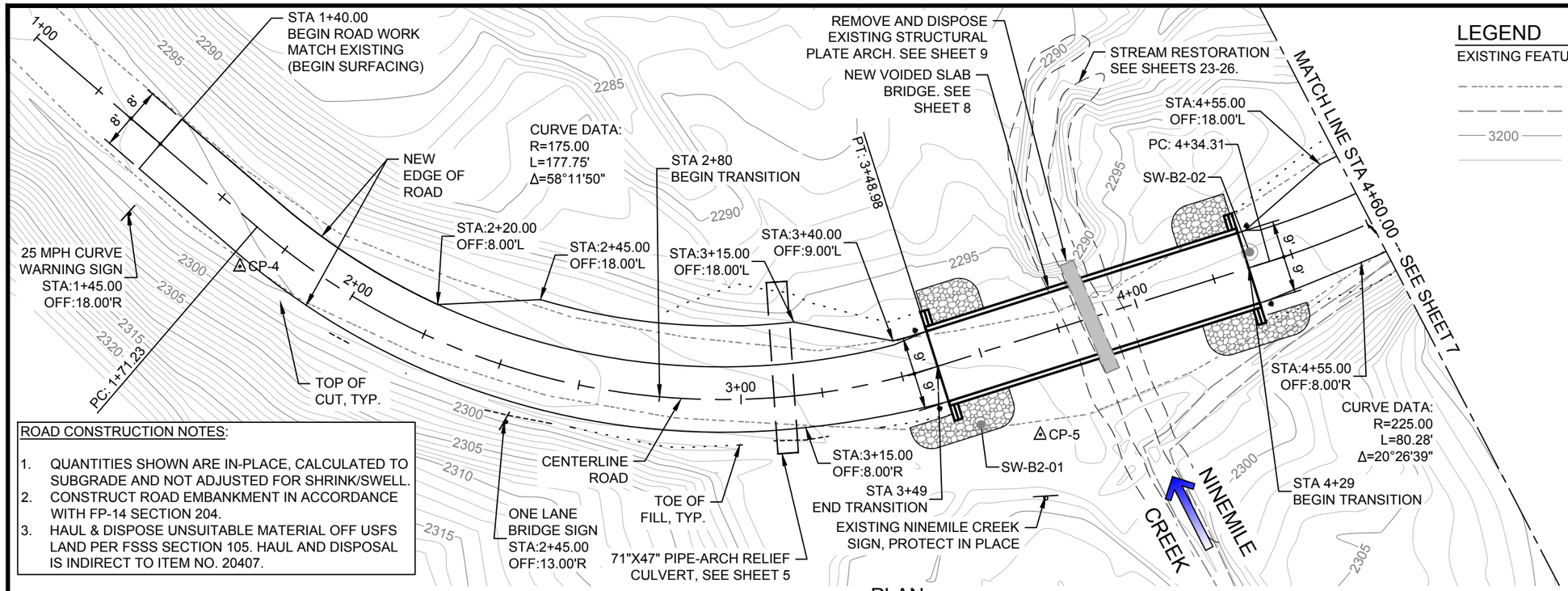

ROAD CONSTRUCTION NOTES:

1. QUANTITIES SHOWN ARE IN-PLACE, CALCULATED TO SUBGRADE AND NOT ADJUSTED FOR SHRINK/SWELL.
2. CONSTRUCT ROAD EMBANKMENT IN ACCORDANCE WITH FP-14 SECTION 204.
3. HAUL & DISPOSE UNSUITABLE MATERIAL OFF USFS LAND PER FSSS SECTION 105. HAUL AND DISPOSAL IS INDIRECT TO ITEM NO. 20407.

PLAN

LEGEND

EXISTING FEATURES

- EXISTING EDGE OF ASPHALT
- EXISTING EDGE OF WATER
- 3200 MAJOR CONTOUR (5')
- MINOR CONTOUR (1')

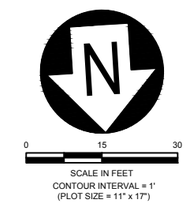

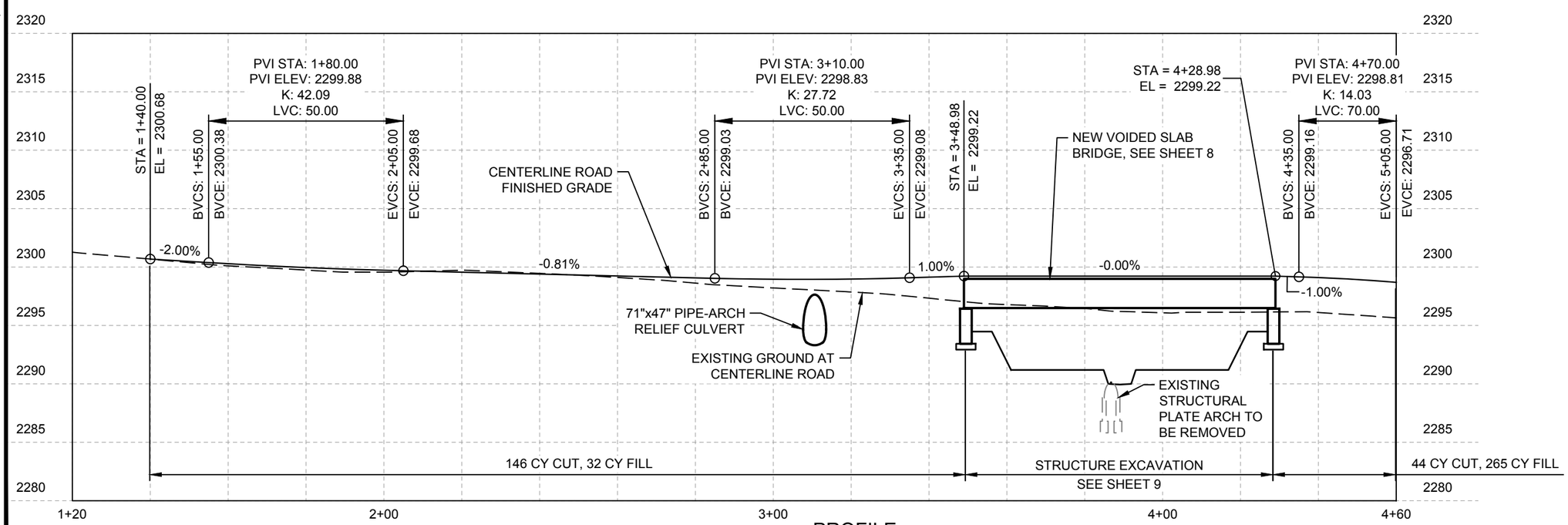

PROFILE

USDA United States Department of Agriculture Forest Service

REGION 6
PACIFIC NORTHWEST REGION

PROJECT NAME

NINEMILE CREEK
BRIDGE DESIGN

RD 6500000 MP 6.674

STRUCTURE NO.
061707000037202

OKANOGAN-WENATCHEE
NATIONAL FOREST

WENATCHEE RIVER
RANGER DISTRICT

DRAWING TITLE

ROAD PLAN &
PROFILE - STA
1+40 TO 3+50

DATE MAR-26	
ARCHIVE NO. R34904	
DESIGNER P.DONNER	DWG SHEET NO. 6
DRAWN P. DONNER	
CHECKED A. GROESBECK	
PROJECT NO. 7333.30	SHEET 6 OF 27

3/18/26 14:58 AMMON C:\DJA-PW\WORK\DJA-PROD\DMS53764\7333.30 NINEMILE CREEK BRIDGE - DESIGN.DWG;

ROAD CONSTRUCTION NOTES:

1. QUANTITIES SHOWN ARE IN-PLACE, CALCULATED TO SUBGRADE AND NOT ADJUSTED FOR SHRINK/SWELL.
2. CONSTRUCT ROAD EMBANKMENT IN ACCORDANCE WITH FP-14 SECTION 204.
3. HAUL & DISPOSE UNSUITABLE MATERIAL OFF USFS LAND PER FSSS SECTION 105. HAUL AND DISPOSAL IS INDIRECT TO ITEM NO. 20407.

LEGEND

EXISTING FEATURES

- EXISTING EDGE OF ASPHALT
- EXISTING EDGE OF WATER
- 3200 MAJOR CONTOUR (5')
- MINOR CONTOUR (1')

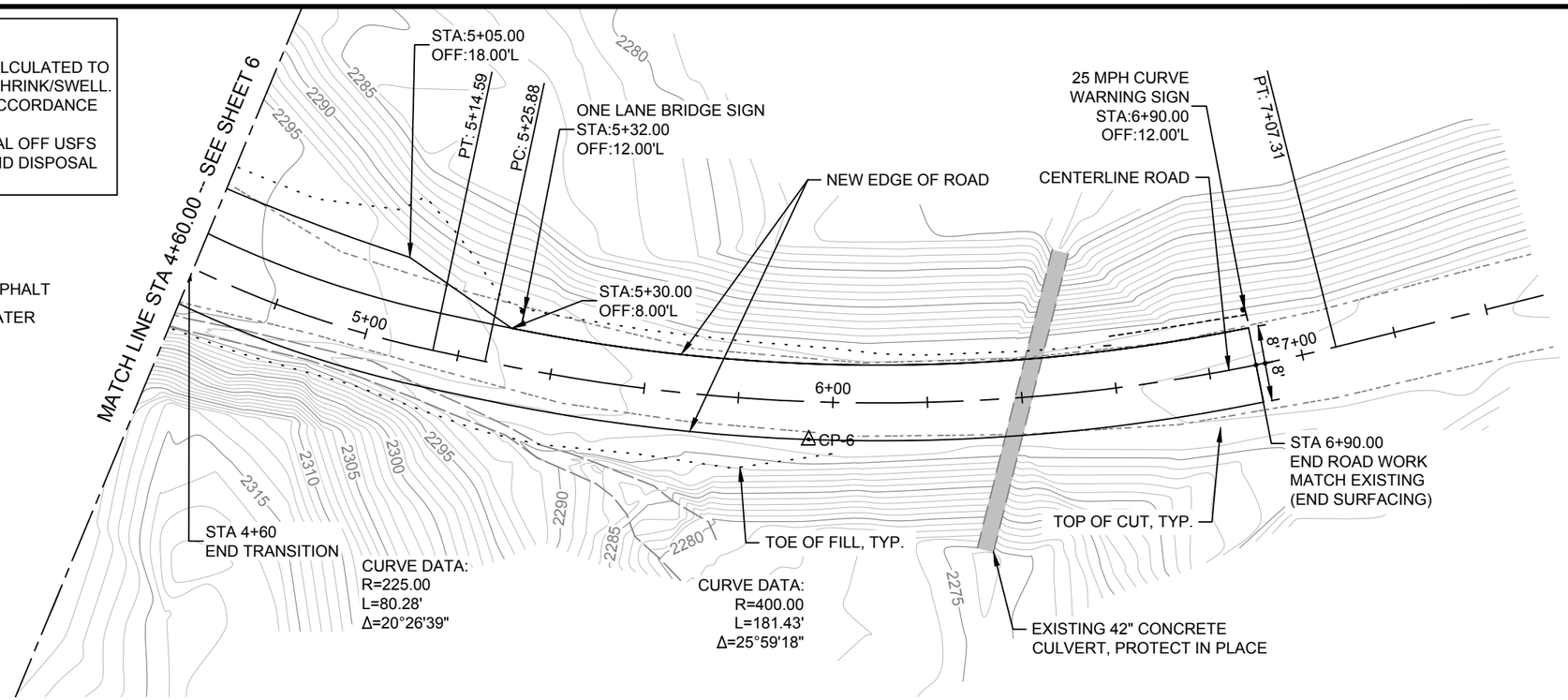

PLAN

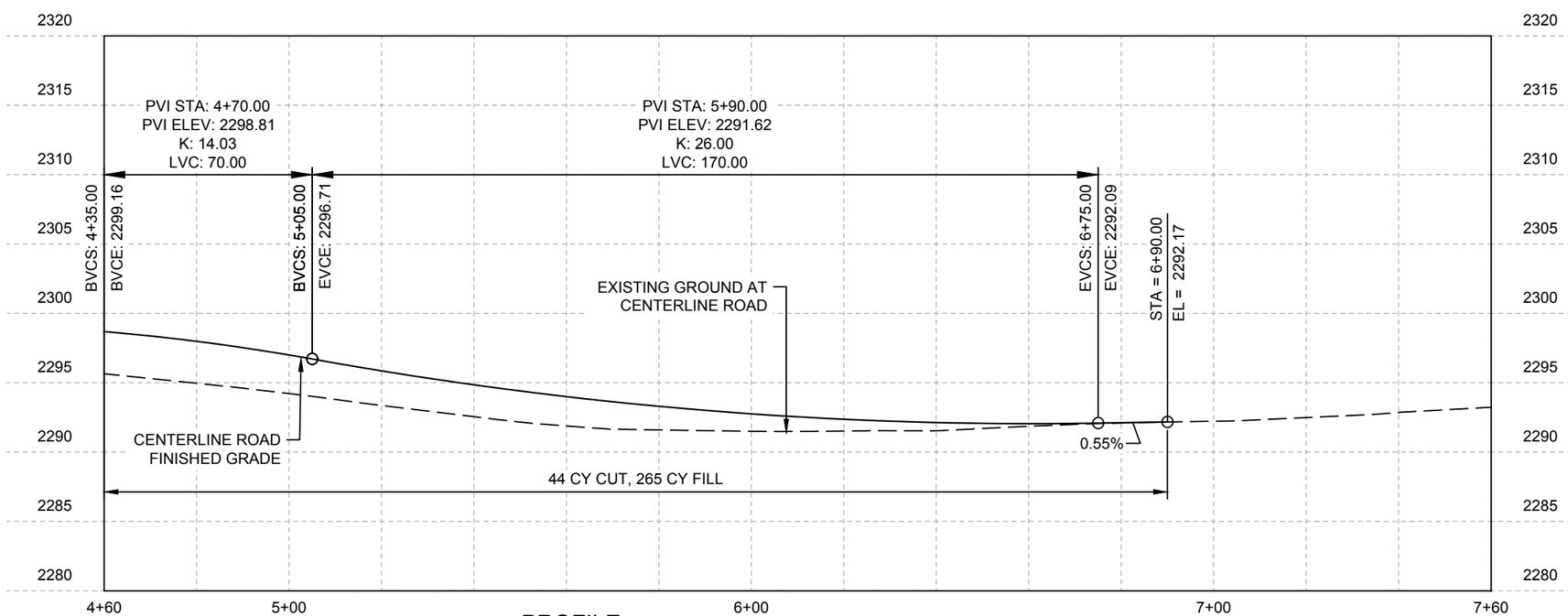

PROFILE

USDA FOREST SERVICE

United States Department of Agriculture
Forest Service

REGION 6
PACIFIC NORTHWEST REGION

PROJECT NAME

NINEMILE CREEK
BRIDGE DESIGN

RD 6500000 MP 6.674

STRUCTURE NO.
061707000037202

OKANOGAN-WENATCHEE
NATIONAL FOREST

WENATCHEE RIVER
RANGER DISTRICT

DRAWING TITLE

ROAD PLAN &
PROFILE - STA
3+50 TO 6+90

DATE MAR-26	
ARCHIVE NO. R34904	
DESIGNER P.DONNER	DWG SHEET NO. 7
DRAWN P. DONNER	
CHECKED A. GROESBECK	SHEET 7 OF 27
PROJECT NO. 7333.30	

3/18/26 14:58 AMMON C:\DJA-PW\WORK\DJA-PROD\DMS53764\7333.30 NINEMILE CREEK BRIDGE - DESIGN.DWG;

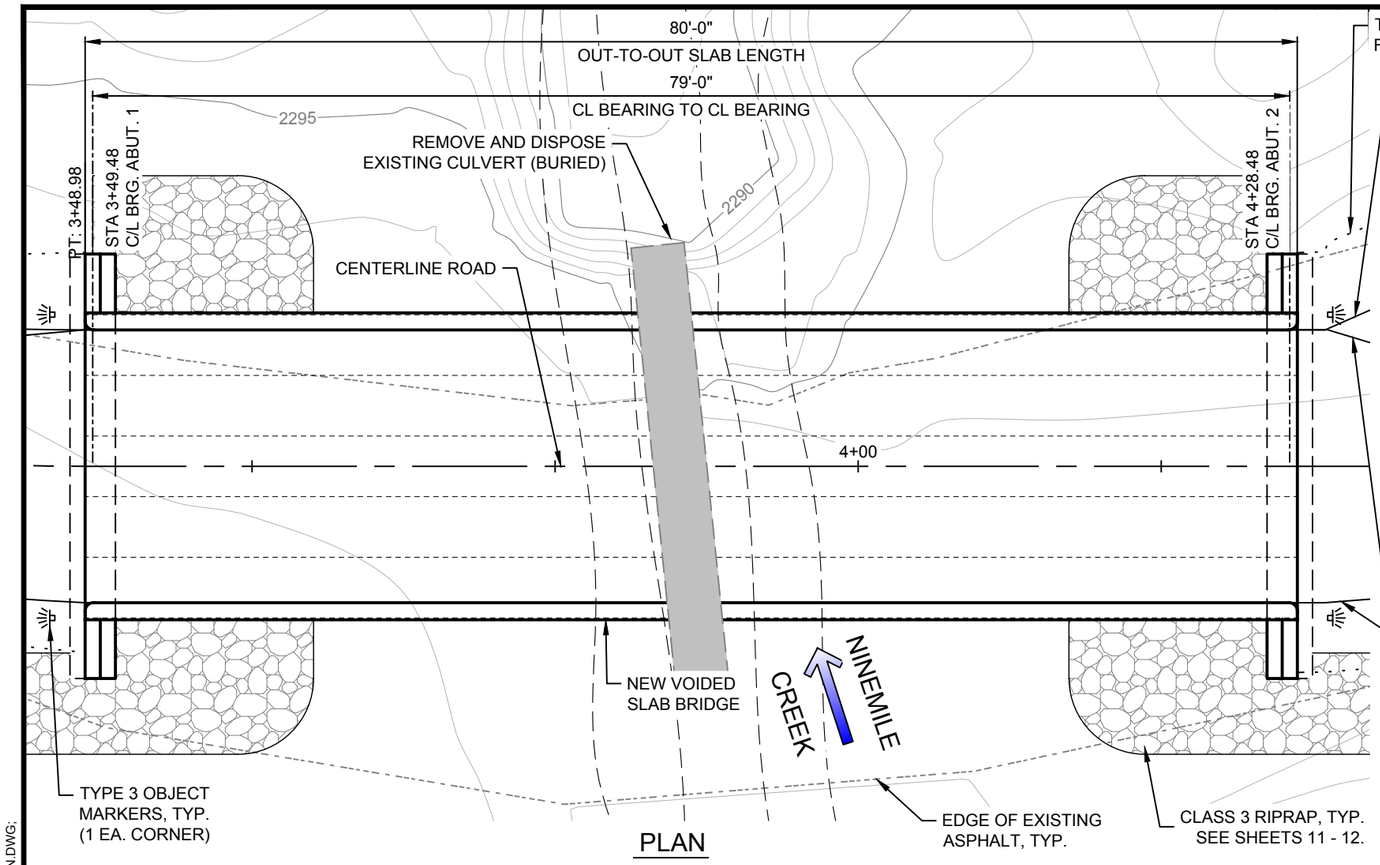

PLAN

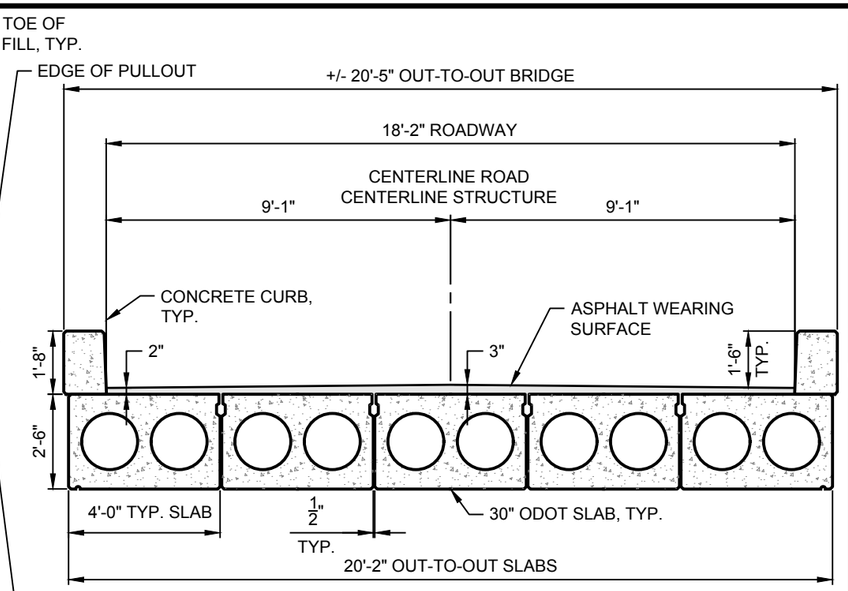

TYPICAL SECTION

SCALE: 1/4" = 1'-0"

NOTE: SEE SHEET 3 FOR BRIDGE DESIGN LOADS AND 18 & 19 FOR SUPERSTRUCTURE DESIGN NOTES.

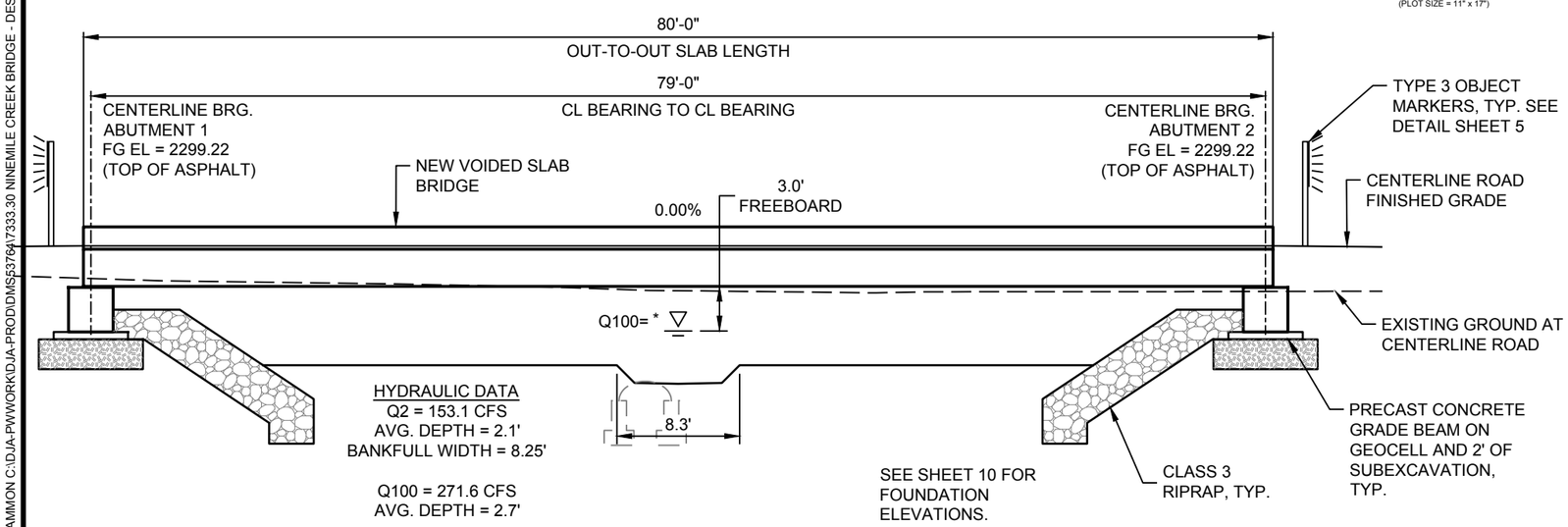

HYDRAULIC DATA
Q2 = 153.1 CFS
AVG. DEPTH = 2.1'
BANKFULL WIDTH = 8.25'

Q100 = 271.6 CFS
AVG. DEPTH = 2.7'

*Q100 = 2293.49' AT UPSTREAM
EDGE OF BRIDGE

SEE SHEET 10 FOR
FOUNDATION
ELEVATION.

ELEVATION

SCALE: 1" = 10'

United States Department of Agriculture
Forest Service

REGION 6

PACIFIC NORTHWEST REGION

PROJECT NAME

NINEMILE CREEK
BRIDGE DESIGN

RD 6500000 MP 6.674

STRUCTURE NO.
061707000037202

OKANOGAN-WENATCHEE
NATIONAL FOREST

WENATCHEE RIVER
RANGER DISTRICT

DRAWING TITLE

BRIDGE GENERAL
LAYOUT

DATE
MAR-26

ARCHIVE NO.
R34904

DESIGNER
P.DONNER

DRAWN
P. DONNER

CHECKED
A. GROESBECK

PROJECT NO.
7333.30

DWG SHEET NO.
8

SHEET 8 OF 27

3/18/26 14:58 AMMON C:\DJA-PW\WORK\DJA-PROD\DMS\376\7333.30 NINEMILE CREEK BRIDGE - DESIGN.DWG;

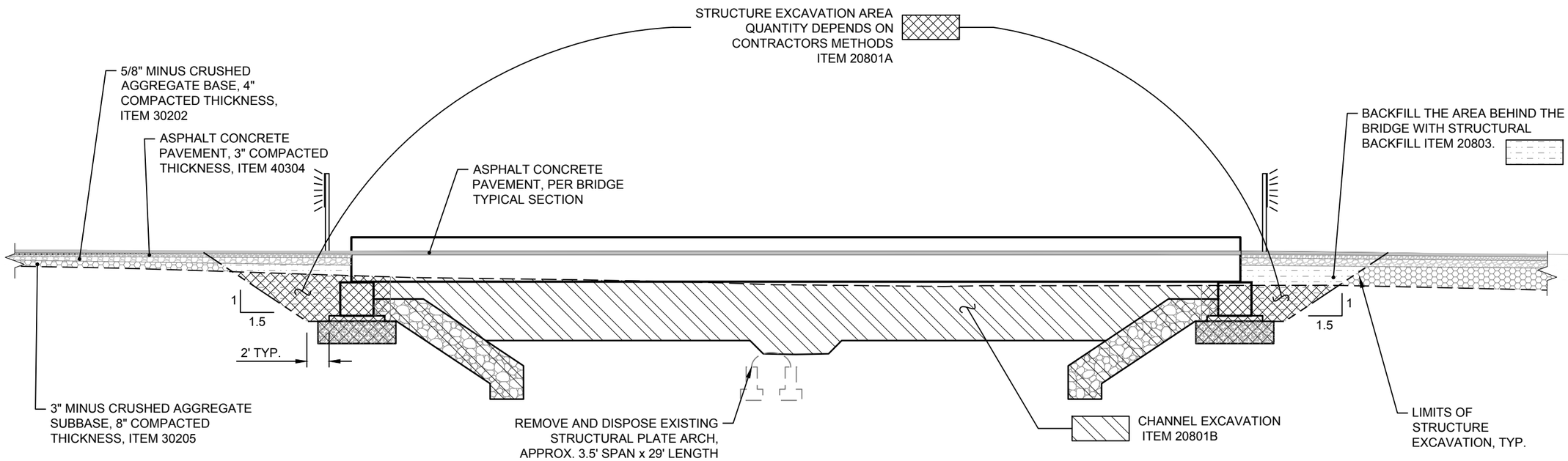

STRUCTURE EXCAVATION

NOT TO SCALE

DEWATERING AND SOIL EROSION CONTROL NOTES:

1. PROTECT AGAINST SOIL EROSION AND SEDIMENTATION DURING CONSTRUCTION IN ACCORDANCE WITH FP-14 SECTION 157 AND PROJECT PERMITS. PREPARE AND SUBMIT A SOIL EROSION AND SEDIMENT CONTROL PLAN TO THE CO FOR APPROVAL A MINIMUM OF THIRTY (30) DAYS PRIOR TO ANY GROUND DISTURBING ACTIVITIES.

2. DEWATER THE EXCAVATION IN ACCORDANCE WITH FP-14 SECTIONS 157 AND 208. REFER TO SHEET 25 FOR DEWATERING REQUIREMENTS.

3. DEWATERING IS THE SOLE RESPONSIBILITY OF THE CONTRACTOR. SHEET 25 ILLUSTRATES THE GENERAL DEWATERING REQUIREMENTS AND POSSIBLE METHODS AND EQUIPMENT AND IS NOT CONSIDERED ADEQUATE OR COMPLETE FOR THIS PROJECT. DEVELOP AND SUBMIT TO THE CO A PROJECT-SPECIFIC DEWATERING PLAN THIRTY (30) DAYS IN ADVANCE, INCLUDING DRAWINGS AND A WRITTEN OUTLINE ILLUSTRATING AND DESCRIBING PROPOSED LAYOUT, METHODS, AND EQUIPMENT. APPROVAL OF THE CONTRACTOR'S DEWATERING PLAN DOES NOT RELIEVE THE CONTRACTOR FROM COMPLETING THE WORK AS REQUIRED. IF THE CONTRACTOR'S METHODS ARE NOT PRODUCING ADEQUATE RESULTS, THE CONTRACTOR MUST RE-EVALUATE AND SUBMIT ANOTHER DEWATERING PLAN. RE-SUBMITTAL OF THE DEWATERING PLAN, IF REQUIRED, IS INDIRECT TO THE WORK.

4. ALL WORK ASSOCIATED WITH REROUTING SURFACE WATER IS PAID FOR UNDER 15713.

STRUCTURE EXCAVATION NOTES:

1. COMPLETE STRUCTURE EXCAVATION IN ACCORDANCE WITH FP-14 SECTION 208.

2. THE CONTRACTOR IS SOLELY RESPONSIBLE FOR EXCAVATION SUPPORT AND COMPLIANCE WITH ALL APPLICABLE OSHA REGULATIONS.

3. EXCAVATION LIMITS SHOWN ARE FOR DEMONSTRATION PURPOSES ONLY. THE CONTRACTOR IS RESPONSIBLE FOR MAKING ADJUSTMENTS TO THE CUT SLOPES AND EXCAVATION QUANTITIES BASED ON THE ACTUAL SOIL TYPES ENCOUNTERED. NOTIFY THE CO IMMEDIATELY IF BEDROCK OR SOFT, UNSUITABLE SOILS ARE FOUND.

4. SUBMIT AN EXCAVATION PLAN FOR APPROVAL THAT INCLUDES, AS A MINIMUM, THE FOLLOWING: DRAWINGS AND A WRITTEN OUTLINE ILLUSTRATING AND DESCRIBING THE PROPOSED EXCAVATION LIMITS, METHODS, EQUIPMENT TO BE USED, LOCATION OF STOCKPILES, AND ESTIMATED QUANTITIES. THE EXCAVATION PLAN MUST COMPLY WITH ALL APPLICABLE OSHA REQUIREMENTS AND LIST THE SOIL TYPE ASSUMED. CHANGES TO THE EXCAVATION LIMITS SHOWN HERE FOR THE CONTRACTOR'S DEWATERING METHODS OR CONTRACTOR CONVENIENCE MUST BE SHOWN ON THE PLAN AND ARE THE RESPONSIBILITY OF THE CONTRACTOR. THE EXCAVATION PLAN IS INDIRECT TO THE WORK.

STRUCTURE BACKFILL NOTES:

1. STRUCTURAL BACKFILL LIMITS SHOWN HERE ARE THE MINIMUM REQUIREMENTS. PLACE STRUCTURAL BACKFILL IN ACCORDANCE WITH FP-14 SECTION 208, AND AS SHOWN ON THESE PLANS, WITH MATERIAL MEETING THE REQUIREMENTS OF SUBSECTION 704.04. COMPACT MATERIAL IN ACCORDANCE WITH SUBSECTION 208.10. ANY MATERIAL OUTSIDE THE LIMITS SHOWN IS CONSIDERED EMBANKMENT AND THE MATERIAL MUST MEET THE REQUIREMENTS OF FP-14 SUBSECTION 704.06.

2. IT IS ASSUMED THAT MATERIAL CONSERVED FROM THE STRUCTURE EXCAVATION AT THIS SITE WILL MEET THE REQUIREMENT FOR EMBANKMENT (704.06). SOME MIXING AND SORTING MAY BE REQUIRED TO MEET THE MATERIAL SPECIFICATION. HAUL AND DISPOSE UNSUITABLE AND EXCESS MATERIAL IS INDIRECT TO OTHER ITEMS IN THE SCHEDULE OF ITEMS.

United States Department of Agriculture
Forest Service

REGION 6
PACIFIC NORTHWEST REGION

PROJECT NAME
NINEMILE CREEK BRIDGE DESIGN

RD 6500000 MP 6.674

STRUCTURE NO.
061707000037202

OKANOGAN-WENATCHEE NATIONAL FOREST

WENATCHEE RIVER RANGER DISTRICT

DRAWING TITLE
STRUCTURE EXCAVATION

DATE MAR-26	
ARCHIVE NO. R34904	
DESIGNER P.DONNER	DWG SHEET NO. 9
DRAWN P. DONNER	
CHECKED A. GROESBECK	SHEET 9 OF 27
PROJECT NO. 7333.30	

3/18/26 14:58 AMMON C:\DJA-PW\WORK\DJA-PROD\DMS53764\7333.30 NINEMILE CREEK BRIDGE - DESIGN.DWG;

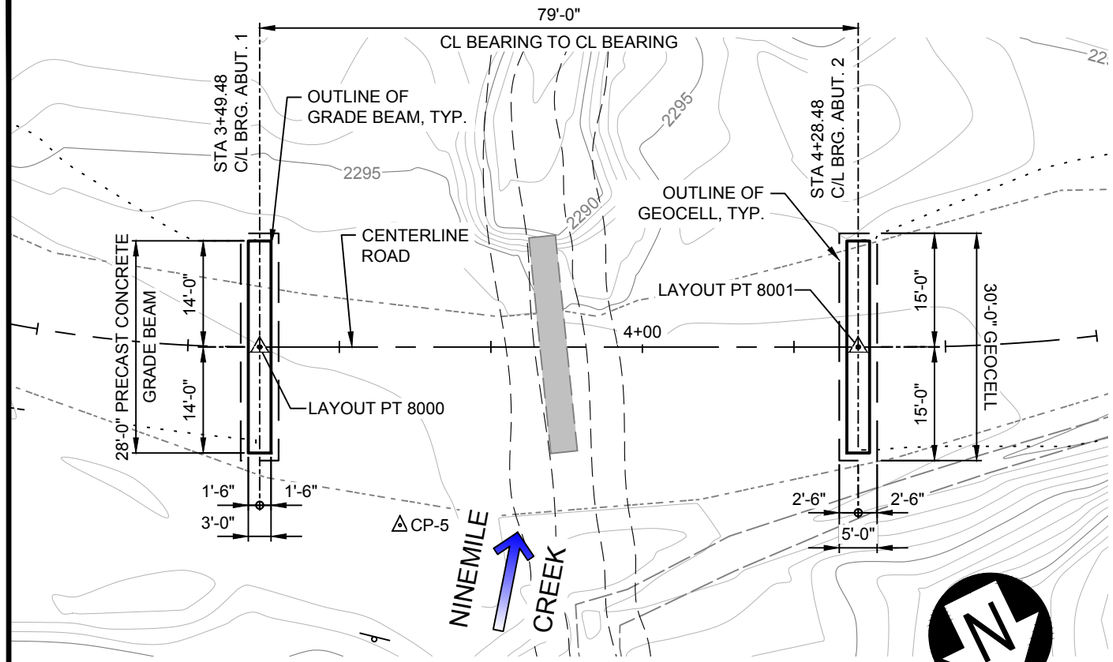

PLAN

NOTE: ALL DIMENSIONS ARE TYPICAL.

SCALE IN FEET
CONTOUR INTERVAL = 1'
(PLOT SIZE = 11" x 17")

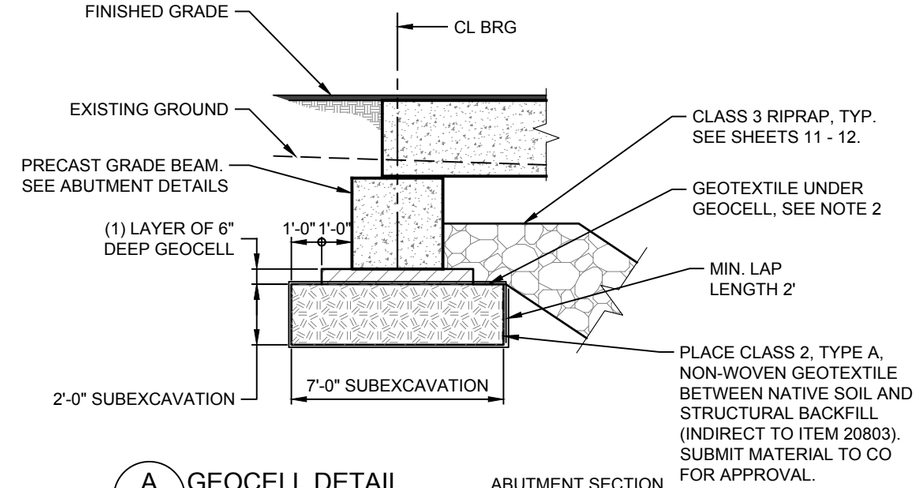

A/10 GEOCELL DETAIL

ABUTMENT SECTION
ABUTMENT 1 SHOWN
ABUTMENT 2 SIMILAR

GEOCELL NOTES

1. FIELD CUT GEOCELL PER MANUFACTURER'S SPECIFICATIONS TO WIDTH SHOWN.
2. PLACE TYPE II-A GEOTEXTILE UNDER GEOCELL AND WRAP OVER TOP AFTER BACKFILLING. INDIRECT TO ITEM 27201.
3. SECURE GEOCELL IN PLACE TO THE LINES AND GRADES SHOWN ON THE DRAWINGS WITH SUITABLE SIDE FORMS (STRETCHER FRAMES).
4. BACKFILL GEOCELL CELLULAR CONFINEMENT SYSTEM WITH GRANULAR BACKFILL MEETING THE REQUIREMENTS OF SUBSECTION 703.03(A) OF THE STANDARD SPECIFICATION.
5. THE SUBSTRUCTURE IS DESIGNED FOR THE FOLLOWING PARAMETERS OUTLINED IN PAGE 17 OF THE GEOTECHNICAL REPORT.

NOMINAL BEARING RESISTANCE	=	9800 PSF
BEARING RESISTANCE FACTOR	=	0.45
FACTORED BEARING RESISTANCE	=	4410 PSF

6. BEARING RESISTANCE IS BASED ON THE GEOCELL AND SUBEXCAVATION AS SHOWN IN A/10.

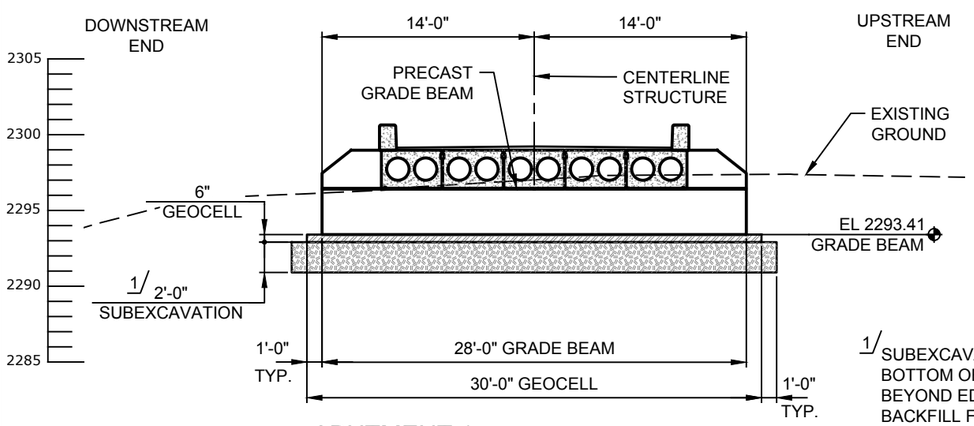

ABUTMENT 1

SCALE: 1" = 10'

LOOKING AHEAD
ON-LINE

1/ SUBEXCAVATE TO 2.0' BELOW BOTTOM OF GEOCELL AND 1' BEYOND EDGE. SEE DETAIL A/10. BACKFILL FILL WITH STRUCTURAL BACKFILL ITEM 20803.

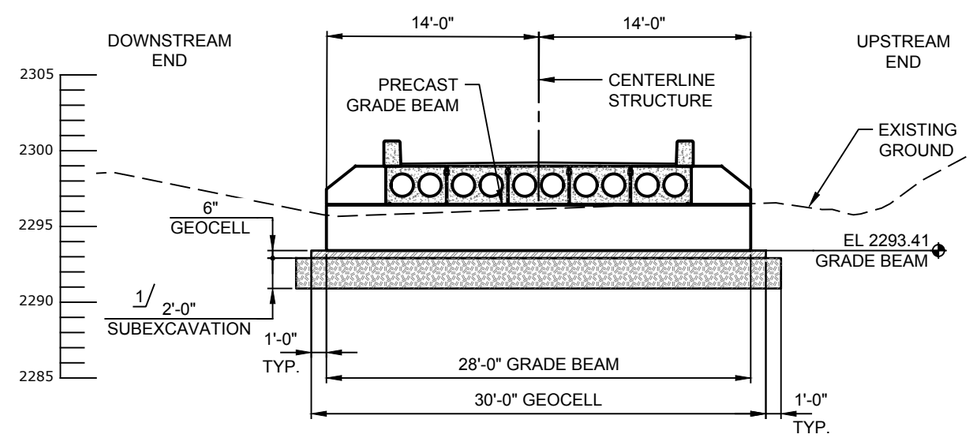

ABUTMENT 2

SCALE: 1" = 10'

LOOKING AHEAD
ON-LINE

USDA FOREST SERVICE
United States Department of Agriculture
Forest Service

REGION 6
PACIFIC NORTHWEST REGION

PROJECT NAME
NINEMILE CREEK BRIDGE DESIGN

RD 6500000 MP 6.674

STRUCTURE NO.
061707000037202

OKANOGAN-WENATCHEE NATIONAL FOREST

WENATCHEE RIVER RANGER DISTRICT

DRAWING TITLE
FOUNDATION PLAN

DATE MAR-26	
ARCHIVE NO. R34904	
DESIGNER P.DONNER	DWG SHEET NO. 10
DRAWN P. DONNER	
CHECKED A. GROESBECK	SHEET 10 OF 27
PROJECT NO. 7333.30	

3/18/26 14:58 AMMON C:\DJA-PW\WORK\DJA-PROD\DMS53764\7333.30 NINEMILE CREEK BRIDGE - DESIGN.DWG;

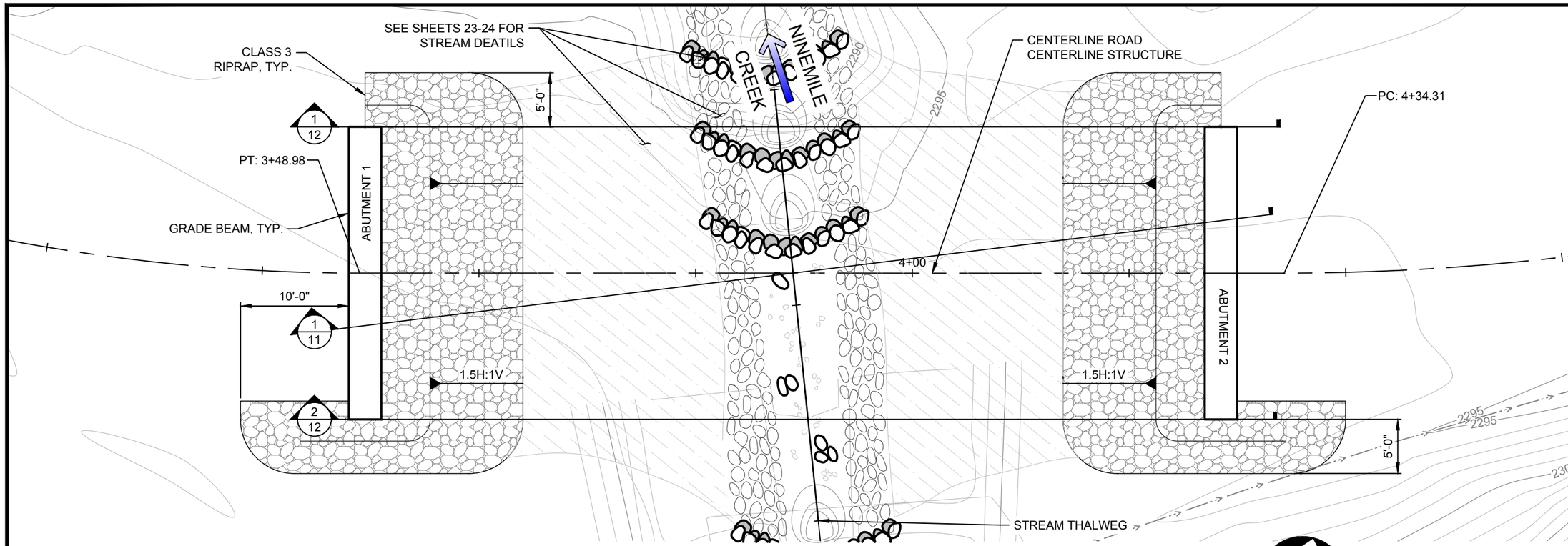

RIPRAP & STREAM PLAN

SCALE: 1" = 10'

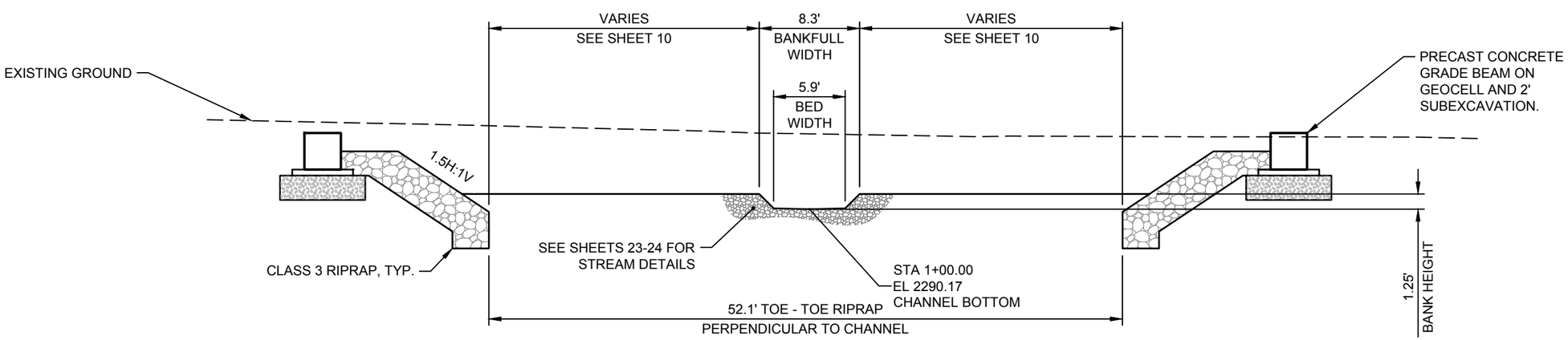

1/11 SECTION — RIPRAP LAYOUT

NOT TO SCALE

USDA FOREST SERVICE

United States Department of Agriculture
Forest Service

REGION 6

PACIFIC NORTHWEST REGION

PROJECT NAME

NINEMILE CREEK
BRIDGE DESIGN

RD 6500000 MP 6.674

STRUCTURE NO.
061707000037202

OKANOGAN-WENATCHEE
NATIONAL FOREST

WENATCHEE RIVER
RANGER DISTRICT

DRAWING TITLE

RIPRAP PLAN

DATE
MAR-26

ARCHIVE NO.
R34904

DESIGNER
P.DONNER

DRAWN
P. DONNER

CHECKED
A. GROESBECK

PROJECT NO.
7333.30

DWG SHEET NO.
11

SHEET 11 OF 27

3/5/26 14:29 PATRICIA.DONNER C:\DJA-PW\WORK\DJA-PROD\DMS53764\7333.30 NINEMILE CREEK - RIPRAP.DWG;

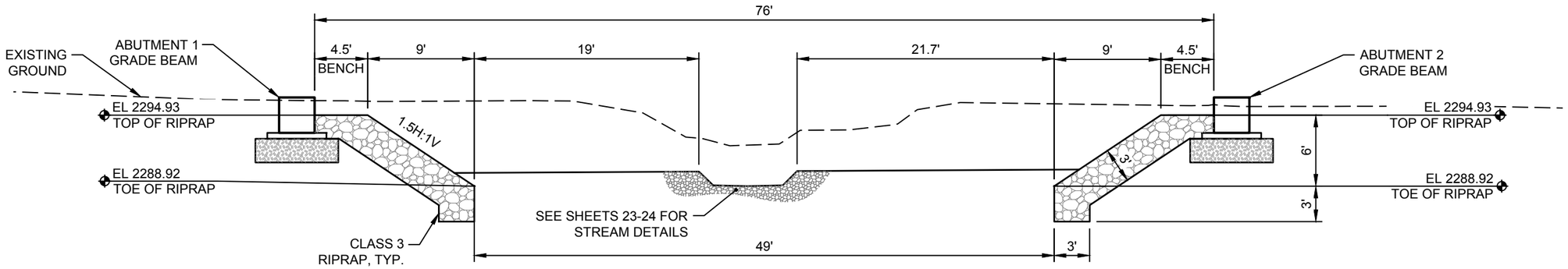

1/12 SECTION RIPRAP LAYOUT

SCALE: 1" = 10'

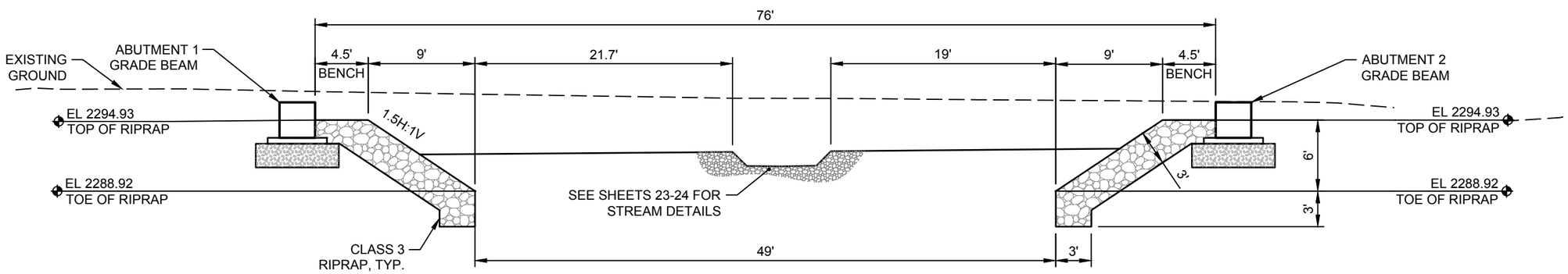

2/12 SECTION RIPRAP LAYOUT

SCALE: 1" = 10'

USDA FOREST SERVICE

United States Department of Agriculture
Forest Service

REGION 6

PACIFIC NORTHWEST REGION

PROJECT NAME

NINEMILE CREEK BRIDGE DESIGN

RD 6500000 MP 6.674

STRUCTURE NO. 061707000037202

OKANOGAN-WENATCHEE NATIONAL FOREST

WENATCHEE RIVER RANGER DISTRICT

DRAWING TITLE

RIPRAP PLAN

DATE MAR-26

ARCHIVE NO. R34904

DESIGNER P.DONNER

DRAWN P. DONNER

CHECKED A. GROESBECK

PROJECT NO. 7333.30

DWG SHEET NO. 12

SHEET 12 OF 27

3/5/26 14:29 PATRICIA.DONNER C:\DJA-PW\WORK\DJA-PROD\DMS537647333.30 NINEMILE CREEK - RIPRAP.DWG;

SHANNON & WILSON

BORING LOG

USFS Lodgepole and Ninemile
Chelan County, Washington

SW-B2-01
Page 1 of 2

EXPLORATION INFORMATION	
Total Depth:	70.0 feet
Top Elevation:	~2297 feet
Vertical Datum:	NAVD88
Northing:	~314,836 feet
Easting:	~1,605,703 feet
Horizontal Datum:	WA-N SP [NAD 1983]
Station and Offset:	3+50,
Hole Finish Date:	June 13, 2025

DRILLING INFORMATION	
Drilling Method:	Sonic Core
Drilling Company:	Holt Services, Inc.
Drill Rig Equipment:	TSi 150 cc
Hole Size:	5 inch
Rod Type/Dia.:	NWJ 2.63 inch
Hammer Wt. / Drop:	140 lbs/30 inches
Hammer ETR:	n/a

BASIC LEGEND
(See separate LOG KEY for additional symbols, acronyms, and definitions)

Abbreviations
- N Standard Penetration Test (SPT) blows per 6-inch increment
- PT Penetration test (not SPT) blows per 6-inch increment
- bpf Blows per foot for penetration test
- WC Natural water content (%)
- FC Fines content (% grains smaller than 0.075 mm)
- PI Plasticity index (Atterberg Limits)

Symbols
- Sample Number / Sample Type: S-5 (SPT) — Gray bar indicates percent of sample length recovered.
- Water Level During Drilling

Approx. Elev. (feet)	Depth (feet)	Material Description and Other Observations	Graphic	Depth (feet)	Samples	Field Data	Lab Data	Multiple Items Plotted (see bottom legend on Page 1)	Depth (feet)
		ASPHALT; 3.5 inches		0.3					
		AGGREGATE BASE COURSE; 6 inches		0.8					
2295		Medium dense, brown, ***SILTY SAND WITH GRAVEL*** (SM); moist; trace charcoal. [A-1-b] Fill		4.0	R-1 S-1 (SPT)	N = 9,9,12 (21 bpf)	S-1A : WC=5% S-1B : WC=9% FC=22% LL/PI=NP/NP		
2290	5	Medium dense to very dense, ***SILTY SAND WITH GRAVEL AND COBBLES*** (SM); moist to wet; iron oxide staining. Colluvium		6-13-25	R-2 S-2 (SPT)	N = 11,13,11 (24 bpf)	WC=6%		5
2285	10				R-3 S-3 (SPT)	N = 20,38,50/3" (88/9" bpf)	WC=4% FC=16%	>>	10
2280	15				R-4 S-4 (SPT)	N = 8,11,12 (23 bpf)	WC=9%		15
		Red-brown, ***SILTY SAND*** (SM); moist; iron oxide staining. Outwash		18.5					
2275	20	Dense to very dense, gray, ***SILTY SAND*** (SM); moist; trace subrounded gravel. Till *-Iron oxide staining to 21 feet.*		19.5	R-5 S-5 (SPT)	N = 10,17,21 (38 bpf)	WC=13%		20
2270	25				R-6 S-6 (SPT) S-7 (GB)	N = 26,50,50 (100 bpf)	WC=10% FC=43% LL/PI=17/3	H	25
2265	30				R-7 S-8 (SPT)	N = 18,33,26 (59 bpf)	WC=13%		30
		Medium dense to dense, light gray to white, ***CLAYEY SAND*** (SC); moist. Residuum [***SCHIST***: extremely weak, completely weathered]		32.0					
	35				S-9	N = 13,12,21	WC=5%		35

NOTES:
- Refer to LOG KEY for explanation of symbols, codes, abbreviations, and definitions.
- Groundwater level, if indicated above, is for the date specified and may vary.
- Group symbol is based on visual-manual identification and selected lab testing.
- Report text contains limitations and information needed to contextually understand this log.

▲ Uncorrected N-value, bpf
▼ Uncorrected, Penetration N-value, bpf
● = WC% ◇ = FC%
Plastic Limit ├─●─┤ Liquid Limit

FINAL	
Logged by:	BWV
Review by:	WJZ
Version:	1

Job#: 113461-001 | Template: Ver1 | File: 113461_LODGEPOLE & NINEMILE.GPJ | Rpt: BORING LOG | Library: SW GINT LIBRARY.GLB | Date: 8/20/25

SHANNON & WILSON

BORING LOG

USFS Lodgepole and Ninemile
Chelan County, Washington

SW-B2-01
Page 2 of 2

See Page 1 for Hole Information and Notes

Approx. Elev. (feet)	Depth (feet)	Material Description and Other Observations	Graphic	Depth (feet)	Samples	Field Data	Lab Data	Multiple Items Plotted (see bottom legend on Page 1)	Depth (feet)
2260		Medium dense to dense, light gray to white, ***CLAYEY SAND*** (SC); moist. Residuum [***SCHIST***: extremely weak, completely weathered] *(starts on previous page)*			R-8 (SPT)	(33 bpf)			
	40				S-10 (SPT)	N = 8,10,18 (28 bpf)	WC=5%		40
2255		***SCHIST***: extremely weak to very weak, light gray to white, micaceous; slightly weathered to fresh; banded with strong to very strong marble 6 inches to 2 feet thick.		43.0	R-9 R-10				
2250	45								45
	50				S-11 (SPT)	N = 34,37,36 (73 bpf)	WC=8%		50
2245					R-11		Point Load=Average Appx. Compressive Strength (psi): 18,000/15,500 (Perpendicular)/(Parallel)		
2240	55				R-12		Point Load=Average Appx. Compressive Strength (psi): 25,000/11,900 (Perpendicular)/(Parallel)		55
	60								60
2235					R-13				
	65								65
2230					R-14		Point Load=Average Appx. Compressive Strength (psi): 1,300/600 (Perpendicular)/(Parallel)		
	70	BOTTOM OF HOLE AT 70 FEET		70.0					70

Job#: 113461-001 | Template: Ver1 | File: 113461_LODGEPOLE & NINEMILE.GPJ | Rpt: BORING LOG | Library: SW GINT LIBRARY.GLB | Date: 8/20/25

United States Department of Agriculture
Forest Service

REGION 6
PACIFIC NORTHWEST REGION

PROJECT NAME
NINEMILE CREEK BRIDGE DESIGN

RD 6500000 MP 6.674

STRUCTURE NO.
061707000037202

OKANOGAN-WENATCHEE NATIONAL FOREST

WENATCHEE RIVER RANGER DISTRICT

DRAWING TITLE
BORING LOGS

DATE
MAR-26

ARCHIVE NO.
R34904

DESIGNER
P.DONNER

DRAWN
P. DONNER

CHECKED
A. GROESBECK

PROJECT NO.
7333.30

DWG SHEET NO.
13

SHEET 13 OF 27

3/10/26 17:03 PATRICIA.DONNER C:\DJA-PW\WORK\DJA-PROD\DMS53764\7333.30 NINEMILE CREEK - BORING LOGS.DWG;

SHANNON & WILSON

BORING LOG

USFS Lodgepole and Ninemile
Chelan County, Washington

SW-B2-02
Page 1 of 1

EXPLORATION INFORMATION	
Total Depth:	*37.5 feet*
Top Elevation:	*~2296 feet*
Vertical Datum:	*NAVD88*
Northing:	*~314,798 feet*
Easting:	*~1,605,634 feet*
Horizontal Datum:	*WA-N SP [NAD 1983]*
Station and Offset:	*4+25,*
Hole Finish Date:	*June 12, 2025*

DRILLING INFORMATION	
Drilling Method:	*Sonic Core*
Drilling Company:	*Holt Services, Inc.*
Drill Rig Equipment:	*TSi 150 cc*
Hole Size:	*5 inch*
Rod Type/Dia.:	*NWJ 2.63 inch*
Hammer Wt. / Drop:	*140 lbs/30 inches*
Hammer ETR:	*n/a*

BASIC LEGEND
(See separate LOG KEY for additional symbols, acronyms, and definitions)

Abbreviations

N	Standard Penetration Test (SPT) blows per 6-inch increment
PT	Penetration test (not SPT) blows per 6-inch increment
bpf	Blows per foot for penetration test
WC	Natural water content (%)
FC	Fines content (% grains smaller than 0.075 mm)
PI	Plasticity index (Atterberg Limits)

Symbols

Sample Number / Sample Type → S-5 (SPT) — Gray bar indicates percent of sample length recovered.

Water Level During Drilling →

Approx. Elev. (feet)	Depth (feet)	Material Description and Other Observations	Graphic	Depth (feet)
2295	0	***ASPHALT;*** 2 inches		0.2
		AGGREGATE BASE COURSE; 6 inches		0.7
2290	5	Loose to very dense, light gray to white, ***CLAYEY SAND*** (SC); moist. [A-2-6] Residuum [***SCHIST***: extremely weak, completely weathered]		
2285	10			
2280	15			
2275	20			
2270	25	***SCHIST***: extremely weak to very weak, light gray to white, micaceous; slightly weathered to fresh		23.5
2265	30			
2260	35			
	37.5	BOTTOM OF HOLE AT 37.5 FEET		37.5

No Observed Groundwater

Samples	Field Data	Lab Data
S-1 (SPT), R-1, S-2 (BS)	N = 8,3,3 (6 bpf)	WC=4%
S-3 (SPT), R-2	N = 5,9,14 (23 bpf)	WC=9% FC=32% LL/PI=37/12
S-4 (SPT), R-3	N = 14,22,24 (46 bpf)	WC=4% pH=6.6 RES=100000 OhmCm
S-5 (SPT), R-4	N = 9,10,12 (22 bpf)	WC=36%
S-6 (SPT), R-5	N = 14,22,38 (60 bpf)	WC=3%
S-7 (SPT), R-6	N = 26,50/5" (50/5" bpf)	WC=3% FC=24% LL/PI=32/5
S-8 (SPT), R-7	N = 26,36,50/5" (86/11" bpf)	WC=4%
S-9 (SPT), R-8	N = 50/2" (50/2" bpf)	WC=9%

Multiple Items Plotted *(see bottom legend on Page 1)*: 0, 50, 100

NOTES:
- Refer to LOG KEY for explanation of symbols, codes, abbreviations, and definitions.
- Groundwater level, if indicated above, is for the date specified and may vary.
- Group symbol is based on visual-manual identification and selected lab testing.
- Report text contains limitations and information needed to contextually understand this log.

▲ Uncorrected N-value, bpf
▼ Uncorrected, Penetration N-value, bpf
● = WC% ◇ = FC%
Plastic Limit ├─●─┤ Liquid Limit

FINAL

Logged by:	BWV
Review by:	WJZ
Version:	1

Job#: 113461-001 | Template Ver:1 | File: 113461_LODGEPOLE & NINEMILE.GPJ | Rpt: BORING LOG | Library: SW GINT LIBRARY.GLB | Date: 8/26/25
3/10/26 17:03 PATRICIA.DONNER C:\DJA-PW\WORK\DJA-PROD\DMS53764\7333.30 NINEMILE CREEK - BORING LOGS.DWG;

United States Department of Agriculture
Forest Service

REGION 6
PACIFIC NORTHWEST REGION

PROJECT NAME
NINEMILE CREEK BRIDGE DESIGN

RD 6500000 MP 6.674

STRUCTURE NO.
061707000037202

OKANOGAN-WENATCHEE NATIONAL FOREST

WENATCHEE RIVER RANGER DISTRICT

DRAWING TITLE
BORING LOGS

DATE
MAR-26

ARCHIVE NO.
R34904

DESIGNER
P.DONNER

DRAWN
P. DONNER

CHECKED
A. GROESBECK

PROJECT NO.
7333.30

DWG SHEET NO.
14

SHEET 14 OF 27

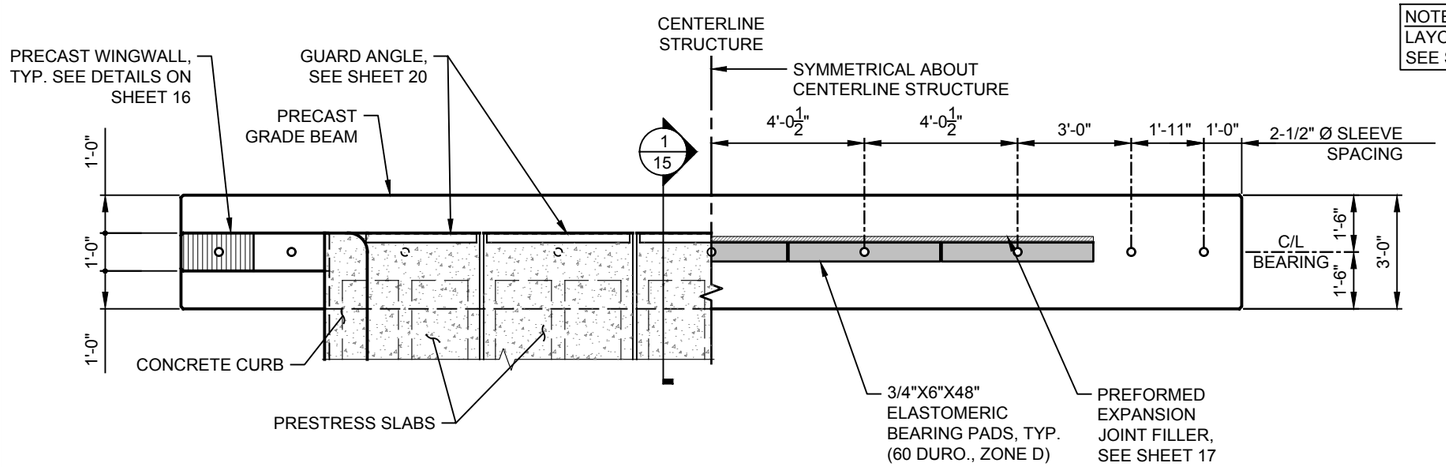

ABUTMENT PLAN

SCALE: 1/4" = 1'-0"

ABUTMENT 1 SHOWN
ABUTMENT 2 SIMILAR

NOTE: NOTE SEE SHEET 10 FOR LAYOUT POINT LOCATIONS & SEE SHEET 4 FOR LAYOUT POINTS.

NOTE: DO NOT BACKFILL BEHIND WINGWALLS UNTIL GROUT IN SLEEVES HAS REACHED FULL STRENGTH

NOTE: PRECAST WINGWALLS AND GRADE BEAMS MUST BE CAST AND SUPPLIED BY THE SAME MANUFACTURER THAT FABRICATES THE PRESTRESSED SLABS.

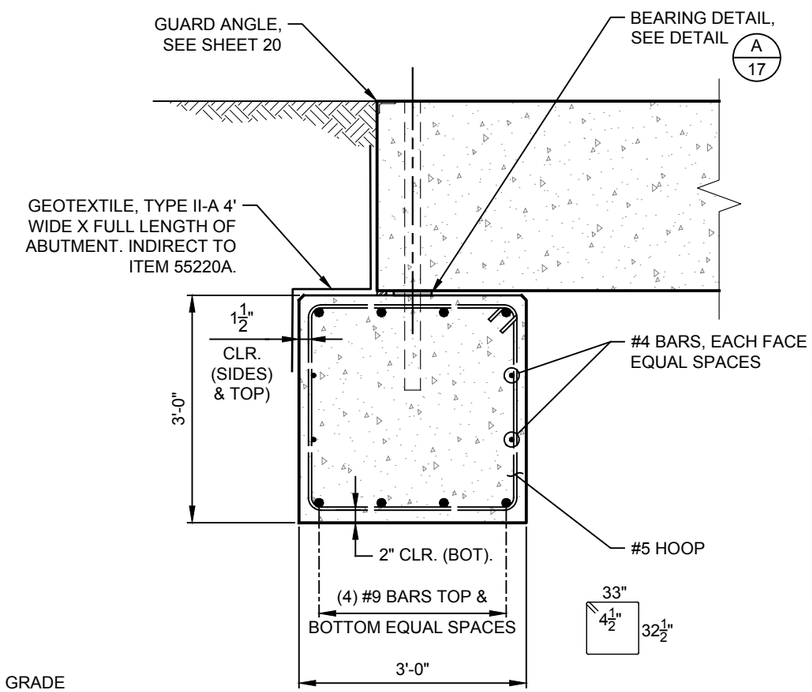

1/15 SECTION

SCALE: 1/2" = 1'-0"

ABUTMENT 1 SHOWN
ABUTMENT 2 SIMILAR

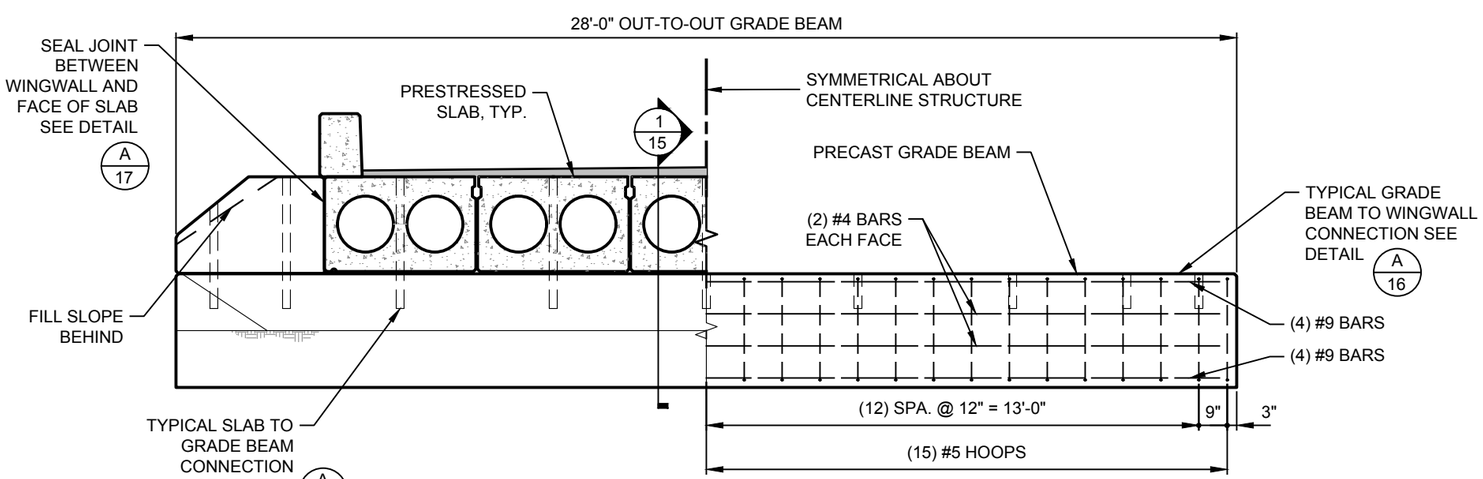

ABUTMENT ELEVATION

SCALE: 1/4" = 1'-0"

ABUTMENT 1 SHOWN
ABUTMENT 2 SIMILAR

USDA FOREST SERVICE

United States Department of Agriculture
Forest Service

REGION 6
PACIFIC NORTHWEST REGION

PROJECT NAME

NINEMILE CREEK BRIDGE DESIGN

RD 6500000 MP 6.674

STRUCTURE NO. 061707000037202

OKANOGAN-WENATCHEE NATIONAL FOREST

WENATCHEE RIVER RANGER DISTRICT

DRAWING TITLE

ABUTMENT PLAN & ELEVATION

DATE MAR-26	
ARCHIVE NO. R34904	
DESIGNER P.DONNER	DWG SHEET NO. 15
DRAWN P. DONNER	
CHECKED A. GROESBECK	SHEET 15 OF 27
PROJECT NO. 7333.30	

3/18/26 14:59 AMMON C:\DJA-PW\WORK\DJA-PROD\DMS53764\7333.30 NINEMILE CREEK BRIDGE - DETAILS.DWG;

FOOTNOTE

1/ FABRICATOR MAY USE POST TENSIONING DUCT IN LIEU OF PVC TO FORM BLOCKOUTS WHERE PVC SLEEVES ARE TO BE REMOVED. P/T DUCT MAY BE LEFT IN PLACE.

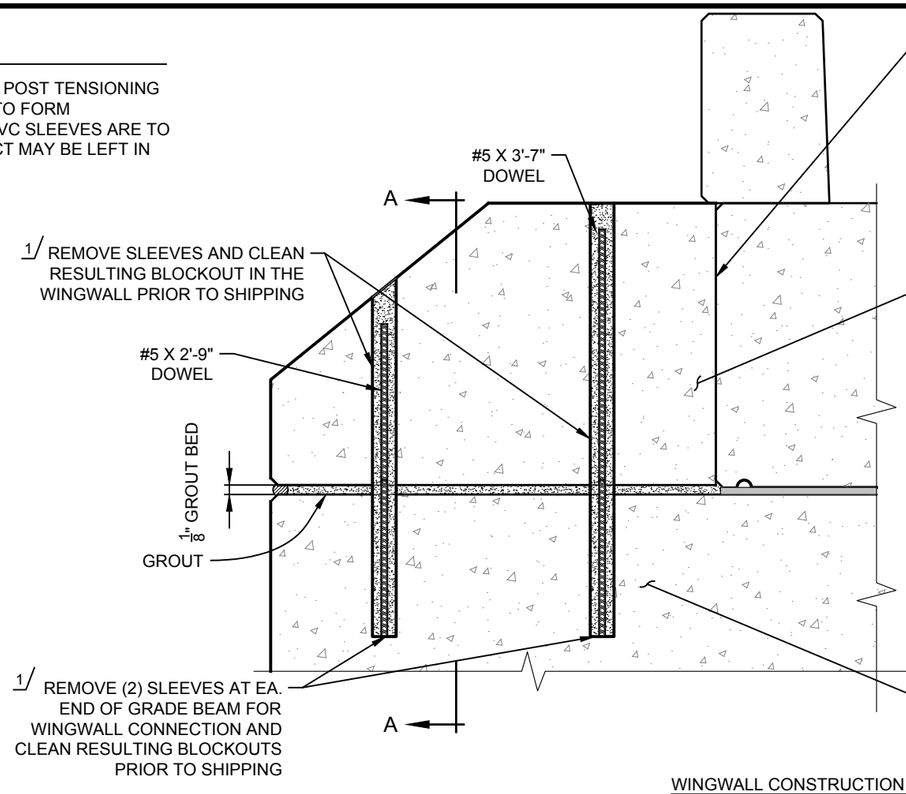

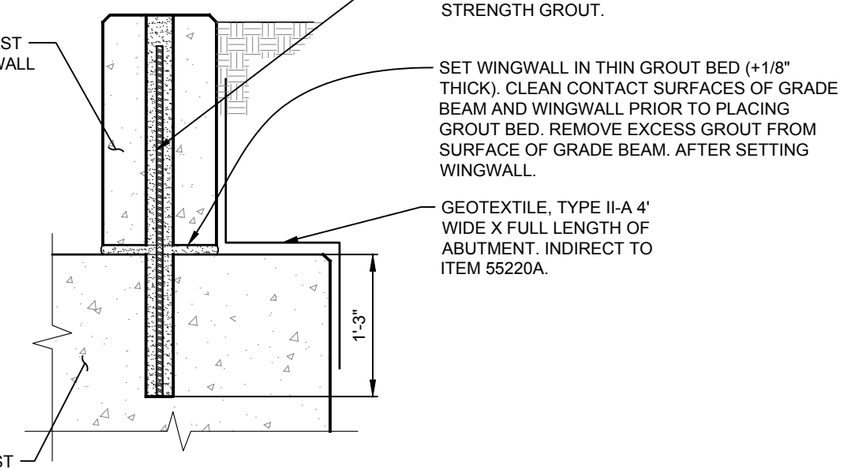

SECTION A - A

WINGWALL CONSTRUCTION SEQUENCING: CONTRACTOR TO PLACE WINGWALLS PRIOR TO SETTING BRIDGE SLABS. VERTICAL WINGWALL DOWELS SHALL NOT BE GROUTED UNTIL AFTER BRIDGE SLABS ARE SET AND FINAL POSITIONED.

A/16 DETAIL — GRADE BEAM TO WINGWALL CONNECTION
SCALE: 3/4" = 1'-0"

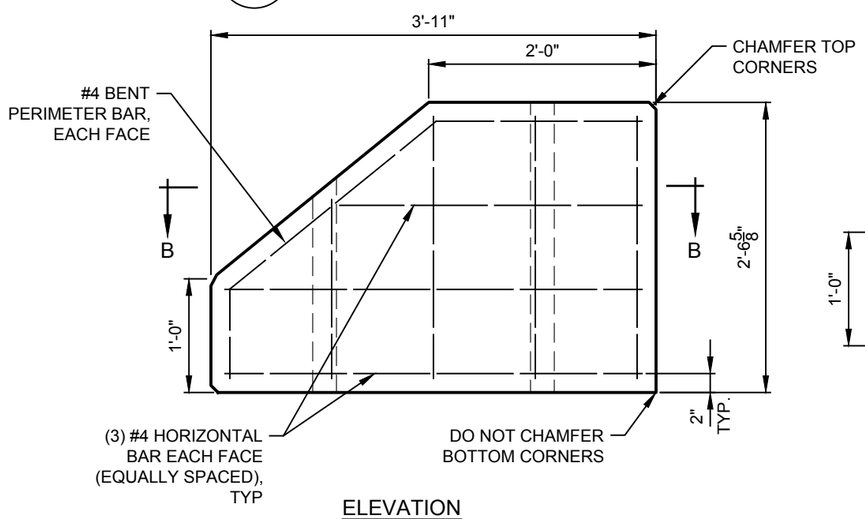

ELEVATION

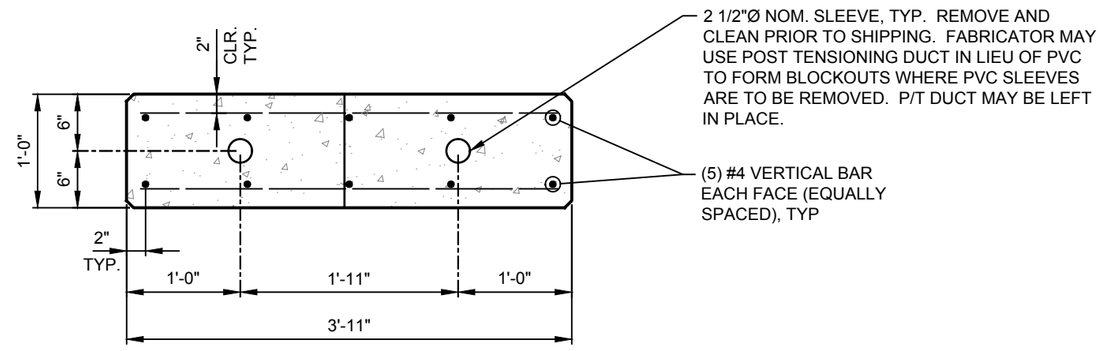

SECTION B - B

B/16 DETAIL — WINGWALL DETAIL
SCALE: 3/4" = 1'-0"

United States Department of Agriculture
Forest Service

REGION 6
PACIFIC NORTHWEST REGION

PROJECT NAME
NINEMILE CREEK BRIDGE DESIGN

RD 6500000 MP 6.674

STRUCTURE NO.
061707000037202

OKANOGAN-WENATCHEE NATIONAL FOREST

WENATCHEE RIVER RANGER DISTRICT

DRAWING TITLE
ABUTMENT DETAILS

DATE
MAR-26

ARCHIVE NO.
R34904

DESIGNER
P.DONNER

DRAWN
P. DONNER

CHECKED
A. GROESBECK

PROJECT NO.
7333.30

DWG SHEET NO.
16

SHEET 16 OF 27

3/18/26 14:59 AMMON C:\DJA-PW\WORK\DJA-PROD\DMS53764\7333.30 NINEMILE CREEK BRIDGE - DETAILS.DWG;

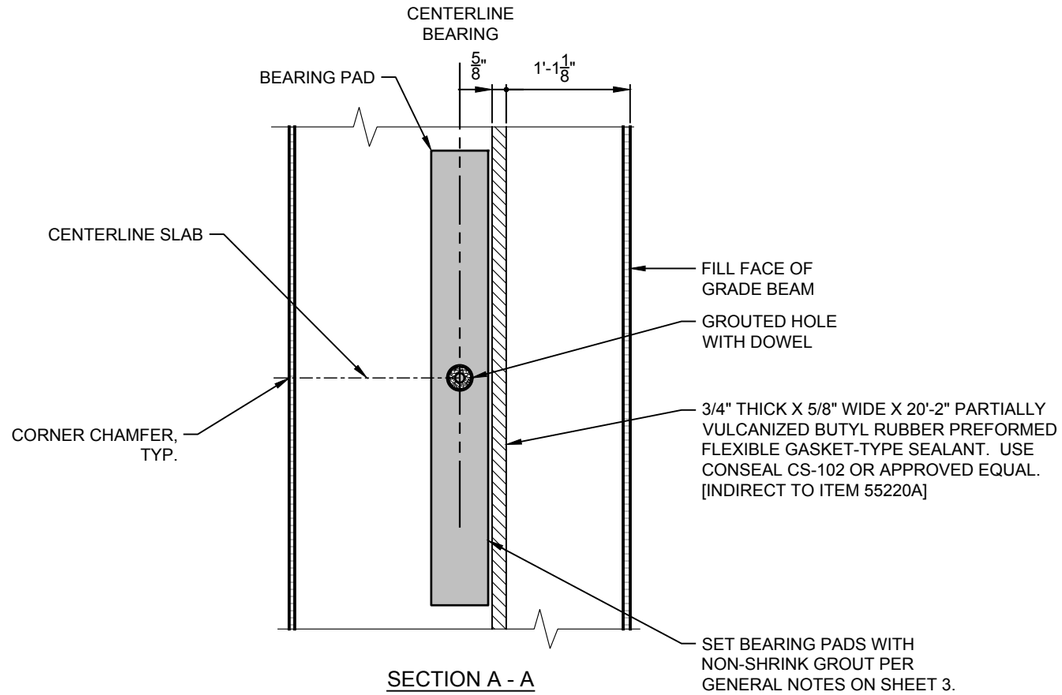

SECTION A - A

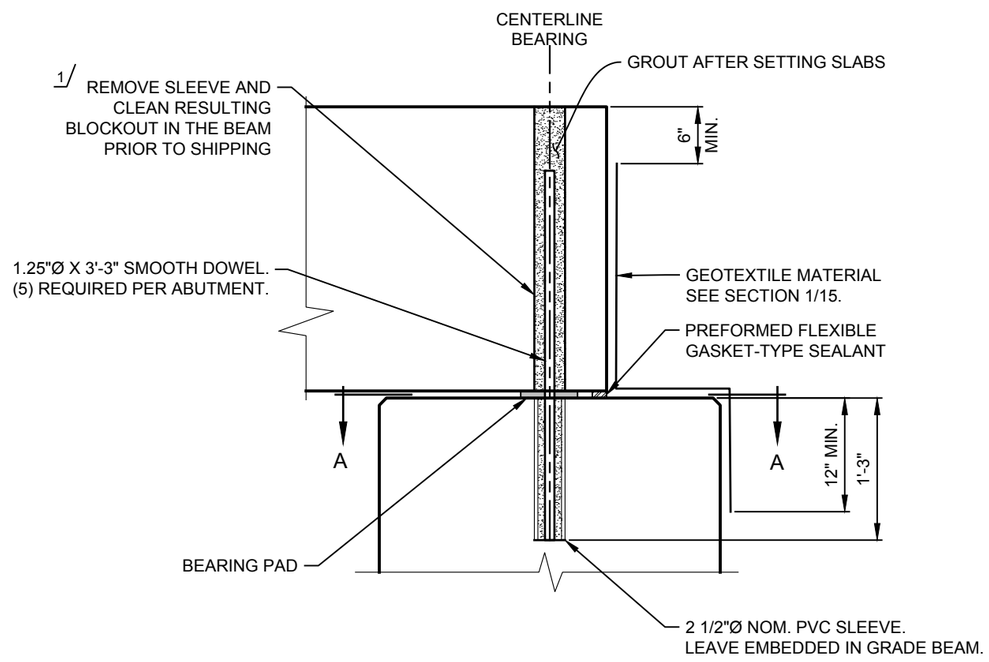

A/17 DETAIL — GRADE BEAM TO DECK SLAB CONNECTION

SCALE: 3/4" = 1'-0"

FOOTNOTE

1/ FABRICATOR MAY USE POST TENSIONING DUCT IN LIEU OF PVC TO FORM BLOCKOUTS WHERE PVC SLEEVES ARE TO BE REMOVED. P/T DUCT MAY BE LEFT IN PLACE.

United States Department of Agriculture
Forest Service

REGION 6
PACIFIC NORTHWEST REGION

PROJECT NAME
NINEMILE CREEK BRIDGE DESIGN

RD 6500000 MP 6.674

STRUCTURE NO.
061707000037202

OKANOGAN-WENATCHEE NATIONAL FOREST

WENATCHEE RIVER RANGER DISTRICT

DRAWING TITLE
ABUTMENT DETAILS

DATE MAR-26	
ARCHIVE NO. R34904	
DESIGNER P.DONNER	DWG SHEET NO. 17
DRAWN P. DONNER	
CHECKED A. GROESBECK	SHEET 17 OF 27
PROJECT NO. 7333.30	

3/18/26 14:59 AMMON C:\DJA-PWWORK\DJA-PROD\DMS53764\7333.30 NINEMILE CREEK BRIDGE - DETAILS.DWG;

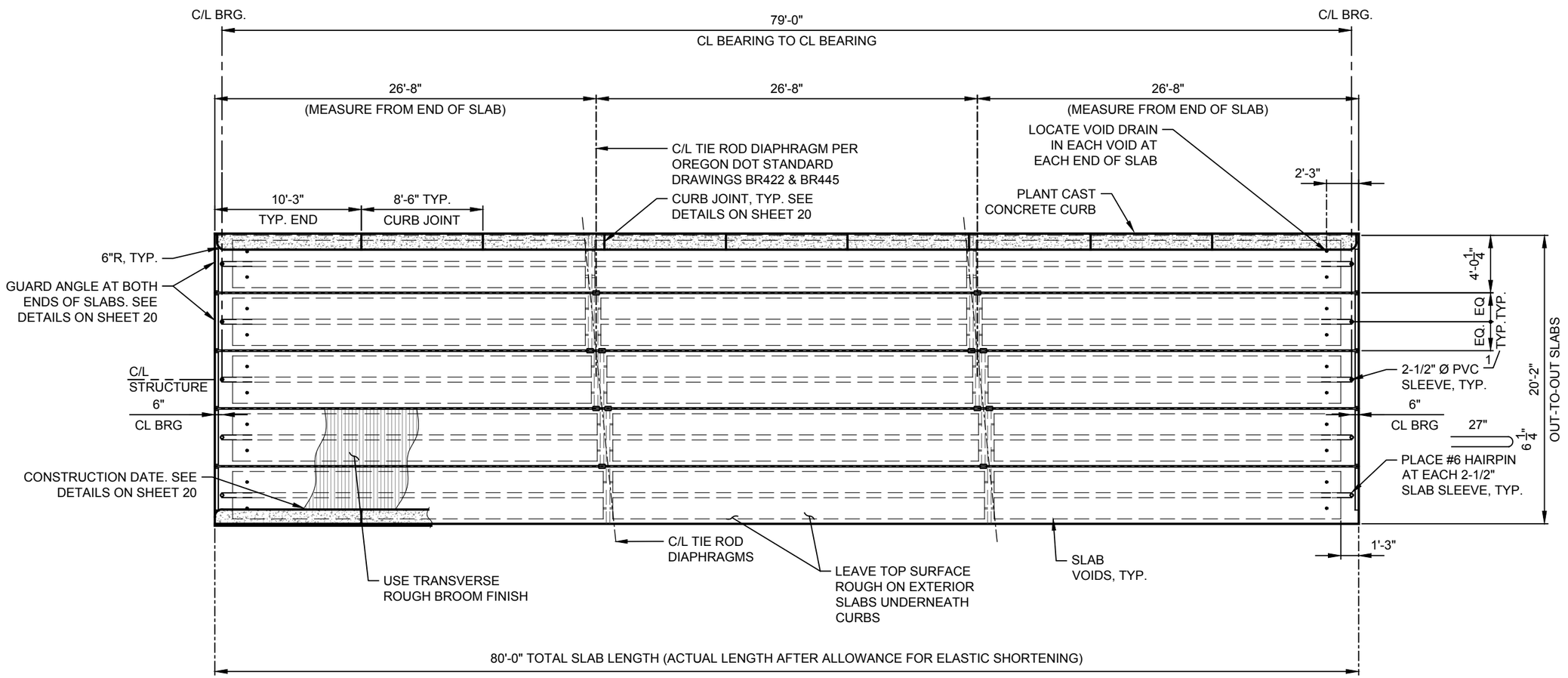

SUPERSTRUCTURE PLAN

SCALE: 1/8" = 1'-0"

DESIGN NOTES

LOAD RATING: THE BRIDGE WAS LOAD RATED AS SHOWN IN THE DESIGN DRAWINGS. IF AN ALTERNATE DESIGN IS SUPPLIED DURING CONSTRUCTION THE LOAD RATING WILL NEED TO BE UPDATED BY THE FABRICATOR.

ALTERNATE SLABS MUST BE DESIGNED AND LOAD RATED BY THE FABRICATOR. LOAD RATE STRUCTURE IN ACCORDANCE WITH THE "MANUAL FOR BRIDGE EVALUATION", CURRENT EDITION WITH THE INTERIMS, USING LRFR METHODOLOGY (CH 6A) AND THE GUIDELINES FOR BRIDGE LOAD RATINGS BY THE USFS REGION 6. RATE THE FOLLOWING VEHICLES AND CONFIGURATIONS USING THE DESIGNATED LOAD MODIFICATION FACTORS: HL-93 (VEHICLE + LANE OR TANDEM AXLES + LANE); TYPE 3, TYPE 3S2, TYPE 3-3, NOTIONAL RATING LOAD (NRL), EMERGENCY VEHICLE CONFIGURATION EV2 & EV3. ALSO ENSURE THE LRFR LOAD RATING FACTOR EXCEEDS 1.0 FOR HL-93 INVENTORY LOADING. ALTERNATE DESIGNS, SECTIONS, AND CONNECTIONS MUST ALSO BE SUBMITTED FOR USFS REVIEW AT LEAST 30 DAYS PRIOR TO CASTING.

CURB RAIL DESIGN: CURBS ARE DESIGNED FOR TEST LEVEL 1 (TL-1) 13.5 KIP STATIC LOAD (AASHTO LRFD-9, TABLE A13.2-1). CURB DOES NOT MEET AASHTO LRFD GEOMETRIC REQUIREMENTS AND HAS NOT BEEN CRASH-TESTED. RAILING MEETS USFS OWNER GEOMETRIC REQUIREMENTS PER FSH 7709.56B CHAPTER 70 AND CAN BE CONSIDERED TO BE CRASH-WORTHY.

1/ REMOVE SLEEVE AND CLEAN RESULTING BLOCKOUT PRIOR TO SHIPPING SLAB. FABRICATOR MAY USE POST TENSIONING DUCT IN LIEU OF PVC TO FORM BLOCKOUTS WHERE PVC SLEEVES ARE TO BE REMOVED. P/T DUCT MAY BE LEFT IN PLACE.

United States Department of Agriculture
Forest Service

REGION 6
PACIFIC NORTHWEST REGION

PROJECT NAME
NINEMILE CREEK BRIDGE DESIGN

RD 6500000 MP 6.674

STRUCTURE NO.
061707000037202

OKANOGAN-WENATCHEE NATIONAL FOREST

WENATCHEE RIVER RANGER DISTRICT

DRAWING TITLE
SUPERSTRUCTURE PLAN

DATE MAR-26	
ARCHIVE NO. R34904	
DESIGNER P.DONNER	DWG SHEET NO. 18
DRAWN P. DONNER	
CHECKED A. GROESBECK	SHEET 18 OF 27
PROJECT NO. 7333.30	

3/18/26 14:59 AMMON C:\DJA-PW\WORK\DJA-PROD\DMS53764\7333.30 NINEMILE CREEK BRIDGE - DETAILS.DWG;

NOTE: FOR ADDITIONAL SLAB DETAILS REFER TO OREGON DEPARTMENT OF TRANSPORTATION STANDARD DRAWINGS BR422 & BR445

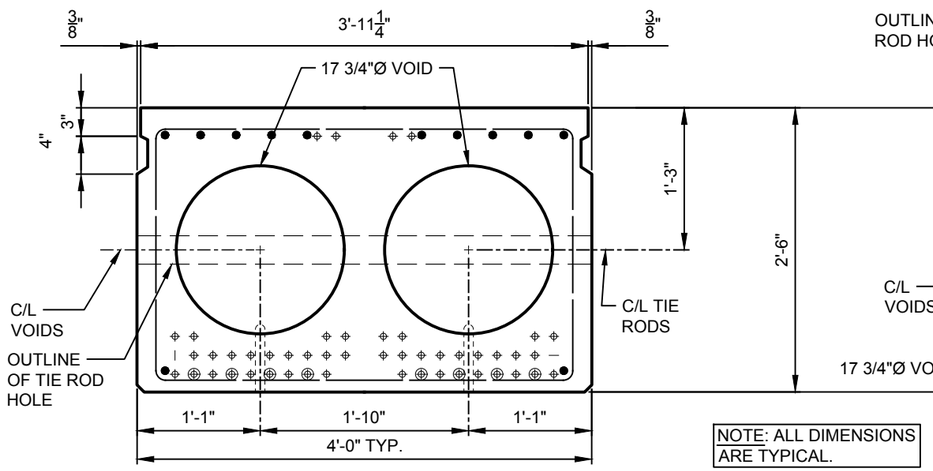

INTERIOR SLAB

SCALE: 3/4" = 1'-0"

⊕ DE-BONDED STRAND, TYP.

NOTE: ALL DIMENSIONS ARE TYPICAL.

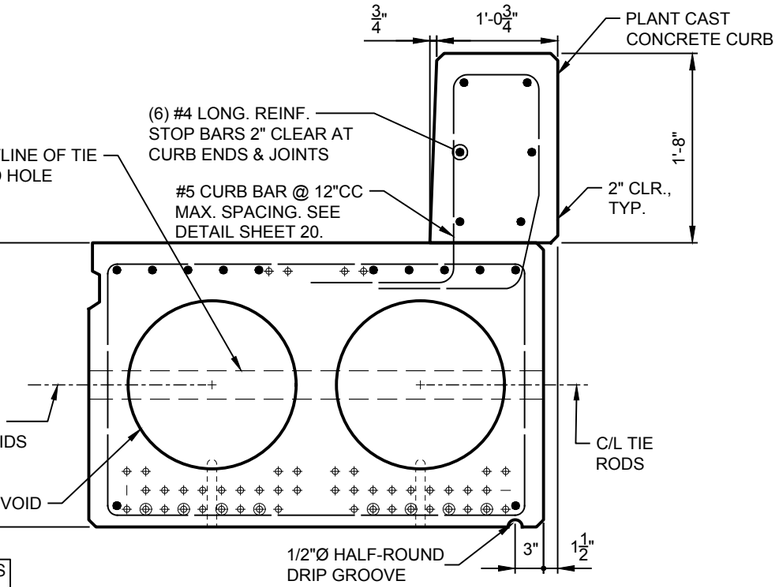

EXTERIOR SLAB

SCALE: 3/4" = 1'-0"

⊕ DE-BONDED STRAND, TYP.

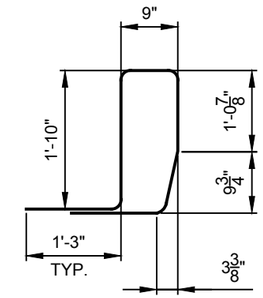

TYPICAL CURB BAR

CURB BAR DETAIL

NOT TO SCALE

PRESTRESSED SLAB NOTES:

1. SLAB IS DESIGNED AND DETAILED BY THE OREGON DEPARTMENT OF TRANSPORTATION. THIS SHEET IS NOT INTENDED TO CONFLICT WITH THE ODOT STANDARD DETAIL.
2. FINISH THE CONCRETE AS SHOWN IN THE SPECIFICATIONS. PROVIDE A FLOAT FINISH TO THE TOP FACE OF THE SLABS FOLLOWED BY A TRANSVERSE ROUGH BROOM FINISH. LEAVE THE TOP SURFACE ROUGH ON THE EXTERIOR SLABS UNDERNEATH THE CURBS. PROVIDE A CLASS 2 RUBBED FINISH ON EXTERIOR FACES OF EXTERIOR SLABS, CURBS, AND ALL SLAB BOTTOM FACES.
3. PROVIDE A PLAN INCLUDING DESCRIPTION, LITERATURE, METHOD SEQUENCING AND MATERIALS, TO POSITIVELY ENSURE THAT NO GROUT FROM KEYWAY GROUTING, OR SIMILAR OPERATIONS, WILL ENTER THE STREAM CHANNEL.
4. EPOXY COATED REBAR IS NOT REQUIRED.

PRECAST PRESTRESSED SLAB SCHEDULE

SLAB NO. (OREGON DET3450)	TOTAL STRAND	DEBONDED STRANDS	DISTANCE "Yc" TO C.G. STRAND AT MIDSPAN (INCHES)	CONCRETE CLASS PER FP-14 SPECIFICATIONS	MIN. CONCRETE STRENGTH REQUIRED BY DESIGN LOADING (KSI)	MIN. CONCRETE STRENGTH AT TRANSFER OF PRESTRESS (KSI)	ESTIMATED INITIAL STRAND STRESS LOSS (KSI)	ESTIMATED MIDSPAN DEFLECTION (IN.)			ESTIMATED SHORTENING 2 WEEKS AFTER TRANSFER OF PRESTRESS (INCHES)
								UPWARD AT RELEASE	UPWARD 3 MONTHS AFTER RELEASE (NO SIDL)	INSTANTANEOUS DOWNWARD DUE TO 100 PSF SIDL	
11	48	8	5.39	CLASS "P" [P(AE) TOP 2"]	6.5	4.8	12.5	1 3/16"	2"	13/16"	1/2"

USDA FOREST SERVICE

United States Department of Agriculture
Forest Service

REGION 6

PACIFIC NORTHWEST REGION

PROJECT NAME

NINEMILE CREEK BRIDGE DESIGN

RD 6500000 MP 6.674

STRUCTURE NO. 061707000037202

OKANOGAN-WENATCHEE NATIONAL FOREST

WENATCHEE RIVER RANGER DISTRICT

DRAWING TITLE

SUPERSTRUCTURE DETAILS

DATE MAR-26

ARCHIVE NO. R34904

DESIGNER P.DONNER

DRAWN P. DONNER

CHECKED A. GROESBECK

PROJECT NO. 7333.30

DWG SHEET NO. 19

SHEET 19 OF 27

3/18/26 14:59 AM/ON C:\DJA-PW\WORK\DJA-PROD\DMS53764\7333.30 NINEMILE CREEK BRIDGE - DETAILS.DWG;

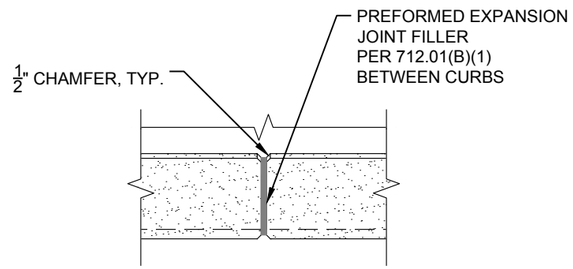

PLAN VIEW

CURB JOINT DETAIL

NOT TO SCALE

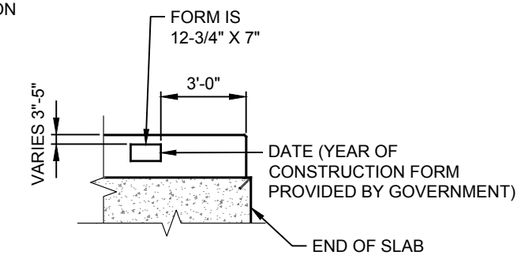

ELEVATION

CONSTRUCTION DATE DETAIL

NOT TO SCALE

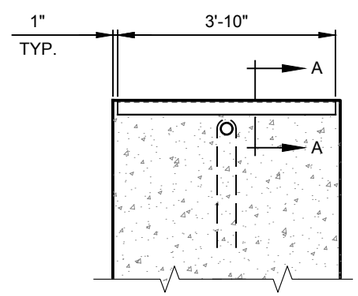

INTERIOR SLAB

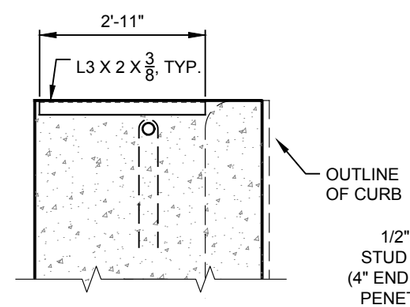

EXTERIOR SLAB

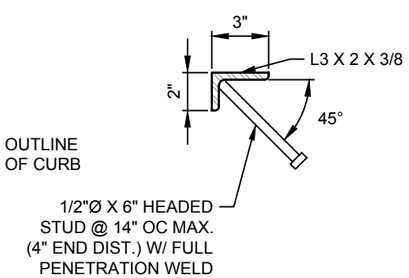

SECTION A-A

GUARD ANGLE DETAIL

NOT TO SCALE

United States Department of Agriculture
Forest Service

REGION 6

PACIFIC NORTHWEST REGION

PROJECT NAME

NINEMILE CREEK
BRIDGE DESIGN

RD 6500000 MP 6.674

STRUCTURE NO.
061707000037202

OKANOGAN-WENATCHEE
NATIONAL FOREST

WENATCHEE RIVER
RANGER DISTRICT

DRAWING TITLE

SUPERSTRUCTURE
DETAILS

DATE
MAR-26

ARCHIVE NO.
R34904

DESIGNER
P.DONNER

DRAWN
P. DONNER

CHECKED
A. GROESBECK

PROJECT NO.
7333.30

DWG SHEET NO.
20

SHEET 20 OF 27

3/18/26 14:59 AMMON C:\DJA-PW\WORK\DJA-PROD\DMS53764\7333.30 NINEMILE CREEK BRIDGE - DETAILS.DWG;

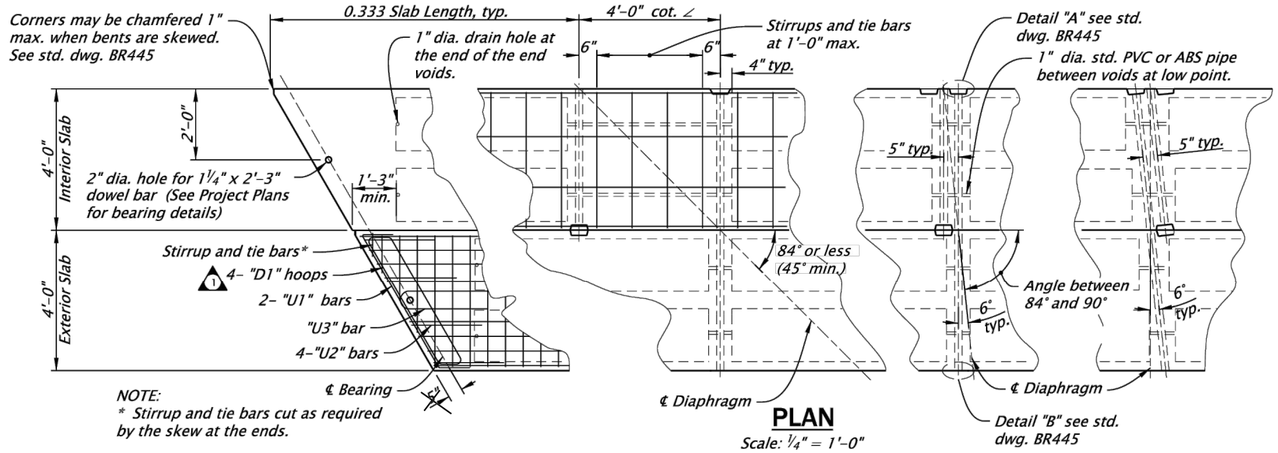

PLAN

Scale: ¼" = 1'-0"

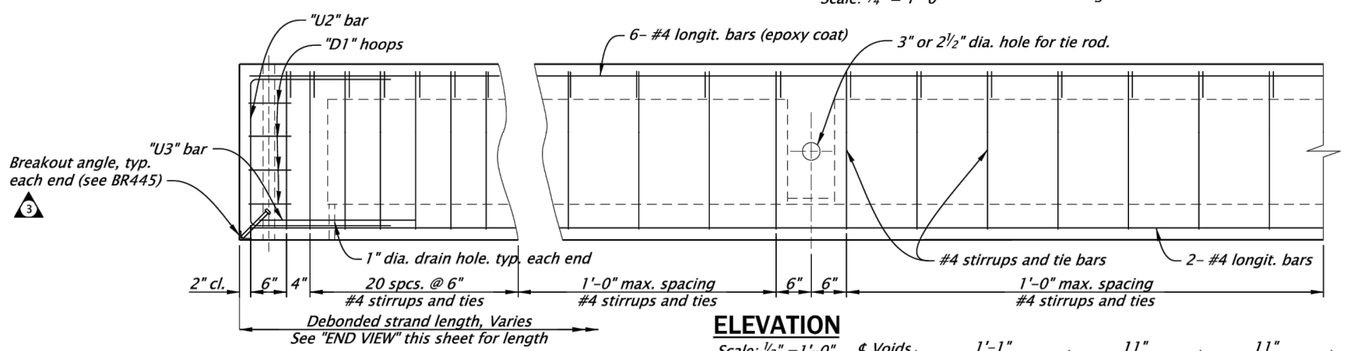

ELEVATION

Scale: ½" = 1'-0"

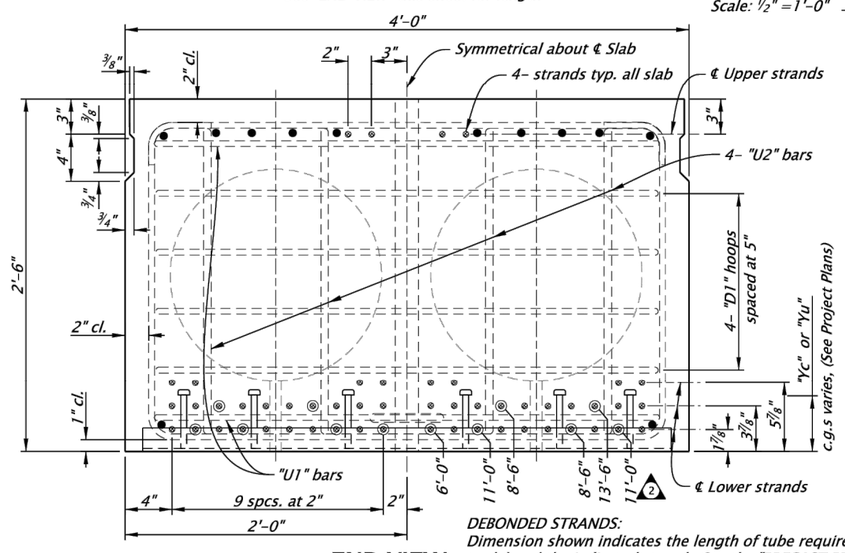

END VIEW

Scale: 1" = 1'-0"

DEBONDED STRANDS:
Dimension shown indicates the length of tube required, at both ends, to debond the indicated strand. See the "PRECAST PRESTRESSED SLAB SCHEDULE" in the project plans for the strand pattern detail.
Detension strands in order of increasing tube length shown.

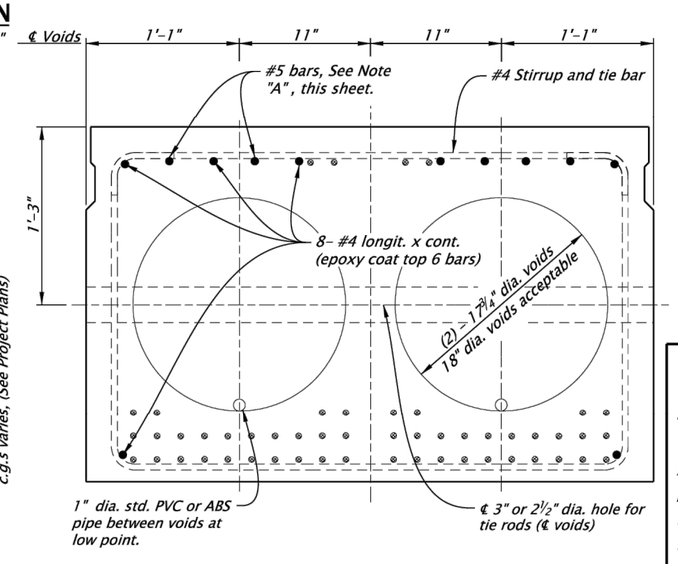

MIDSPAN VIEW

Scale: 1" = 1'-0"

NOTE "A" (Slab End Bars)
2- #5 x 10'-0", slabs 2 and 3
4- #5 x 10'-0", slabs 4, 5 and 6
4- #5 x 12'-6", slabs 7, 8 and 9
4- #5 x 15'-0", slabs 10, 11, 12 and 13
Place bars each end of each slab (Epoxy coat).

NOTE:
Grout keyway as specified in General Notes.
Omit keyway on exterior side of exterior slabs.
Keyway is continuous.

SECTION PROPERTIES

Area =	938 in²
c.g. =	14.91 in
I =	97,278 in⁴
St =	6447 in³
Sb =	6524 in³
Weight =	1009 lbs/ft
J =	180,800 in⁴
K =	0.80
V/S =	6.01
Form wt = (tubes)	27 lbs/ft
Total wt w/forms=	1036 lbs/ft

Diaphragm Weight

No Skew	550 lb
15° Skew	900 lb
30° Skew	1560 lb
45° Skew	2380 lb

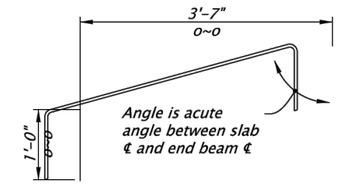

#4 "U1" BAR
(4- required per slab)

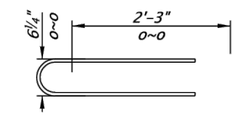

#6 "U3" BAR (A706)
(2- required per slab)

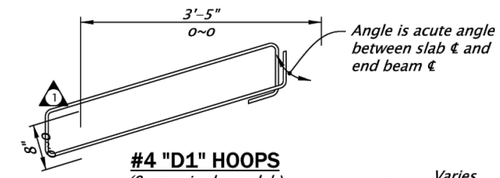

#4 "D1" HOOPS
(8- required per slab)

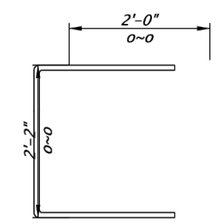

#5 "U2" BAR
(8- required per slab)

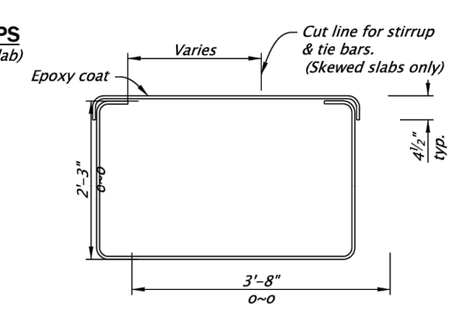

#4 STIRRUP & TIE

Accompanied by dwg. BR445

The selection and use of this Standard Drawing, while designed in accordance with generally accepted engineering principles and practices, is the sole responsibility of the user and should not be used without first consulting a Registered Professional Engineer.

All materials shall be in accordance with the current Oregon Standard Specifications.

OREGON STANDARD DRAWINGS

30" PRECAST PRESTRESSED SLAB

2024

	DATE	REVISION DESCRIPTION
1	07-2020	Added end zone reinf.
2	07-2020	Revised debonded lengths and locations
	07-2020	Updated drawing to current stds.
3	07-2022	Added breakout angle.

CALC. BOOK NO. N/A | SDR DATE 08-JUL-2022 | **BR422**

Effective Date: December 1, 2025 - May 31, 2026

JUL-2022
BR422.dgn

(NOTE: DO NOT CROWN GIRDERS.)

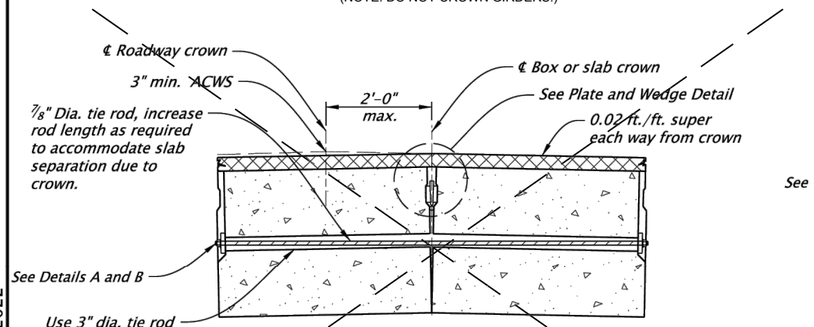

TYPICAL DETAIL FOR INSTALLING BOXES OR SLABS ON CROWN

NOTE:
Tighten tie rods until the bottom corners of the boxes or slabs are in contact. Loosen the tie rod and install the plates and wedges per detail. Shift wedge location as required to avoid conflict with the tie rod.

Tension the tie rods. Install boxes or slabs level and build up roadway crown with AC wearing surface when roadway width is 28' or less (for bridges with ACWS).

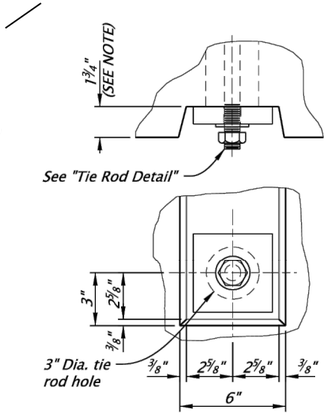

DETAIL "A"

Non-Tensioning End

NOTE:
1 3/4" @ tie rod ℄ (2 1/2" depth may be used for slabs with an appropriate reduction in tie rod length)

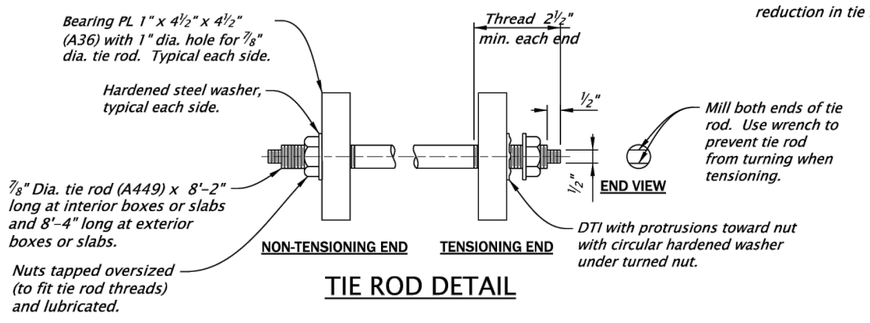

TIE ROD DETAIL

(NOTE: DO NOT CROWN GIRDERS.)

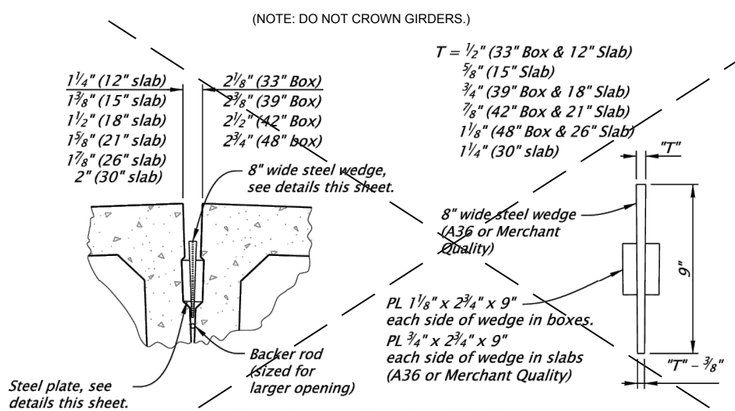

PLATE AND WEDGE DETAIL

NOTE:
Add steel plates and wedge at each tie rod crossing before tensioning tie rods.
Hot-dip galvanize wedges and plates.

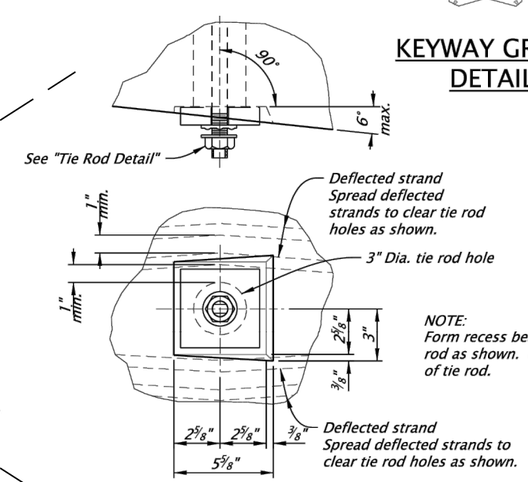

NOTE:
Form recess bearing area perpendicular to tie rod as shown. Use Detail "B" at tensioning end of tie rod.

DETAIL "B"

Tensioning End

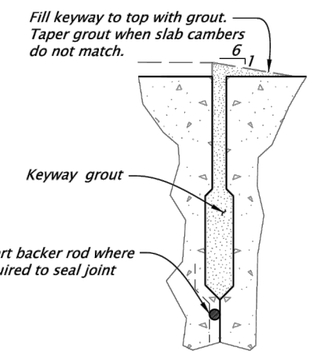

KEYWAY GROUT DETAIL

GENERAL NOTES FOR PRESTRESSED BOXES AND SLABS

Boxes and slabs are designed for live and superimposed dead loading as shown in the General Notes for the Project.

Provide the class of concrete shown in the Slab or Box Schedule with nominal maximum size aggregate of 1 or 3/4 . Transfer prestress after the concrete reaches the minimum concrete strength at transfer shown in the Slab or Box Schedule.

Select a keyway grout from the QPL for filling keyways, lifting blockouts and tie rod blockouts. **

Allow traffic on the bridge only after keyway grout has reached design strength.

(**NOTE: KEYWAY GROUT SHALL MEET THE REQUIREMENTS OF SECTION 725.13(B) OF THE SPECIFICATIONS.)

Provide reinforcing steel as specified in the General Notes for the Project.

Provide smooth dowels conforming to AASHTO M31, Grade 60 (ASTM A615, Grade 60), ASTM F1554, Grade 55 or ASTM A529, Grade 55. 2 1

Provide 1/2" diameter 7 wire low relaxation prestressing steel strand conforming to AASHTO Specification M203 (ASTM A416), Grade 270 Supplement 1.

Tension strand initially to 31.0 kips per strand (after harping deflected strand). Debond strands where specified using either split or solid plastic sheathing with a minimum wall thickness of 0.025".

Provide high strength tie rods conforming to ASTM A449. Provide heavy hexagon nuts conforming to ASTM A563. Provide hardened steel washers conforming to ASTM F436. Hot-dip galvanize tie rods, plates, nuts and washers (except DTIs) after fabrication. 1

Tighten tie rods to 39 kips (minimum) using mechanically galvanized direct tension indicators (DTIs) conforming to ASTM F959 and ASTM F3125, Grade A325. Tighten all tie rods (per box or slab) to about one half the specified tension before proceeding with final tensioning. 1

Keep boxes and slabs upright at all times. Support them within 2'-0" of the ends during storage (to prevent excessive camber, overstress or failure). Locate transport supports and lifting devices within 2'-0" of the ends of boxes and slabs. Transportboxes and slabs after the concrete has reached the 28 day design strength and a minimum of 7 days after casting.

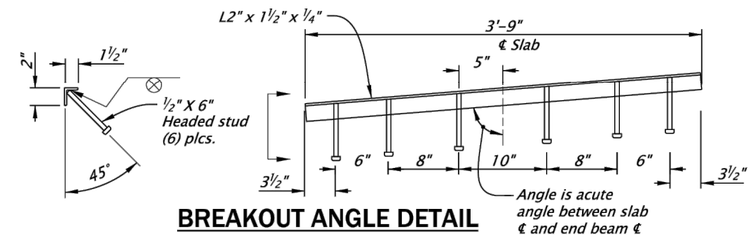

BREAKOUT ANGLE DETAIL

NOTE:
Provide steel angle conforming to ASTM A36. Hot-dip galvanize breakout angle after fabrication. Shift headed studs as required, no more than 2", to avoid prestressing strands.

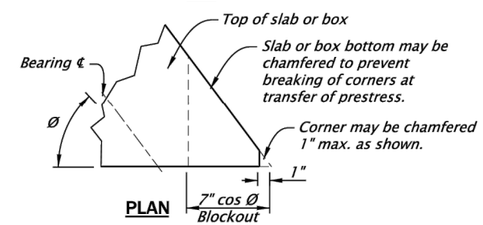

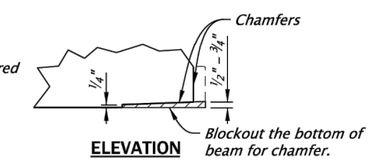

PARTIAL ELEVATION CHAMFER DETAIL

The selection and use of this Standard Drawing, while designed in accordance with generally accepted engineering principles and practices, is the sole responsibility of the user and should not be used without first consulting a Registered Professional Engineer.

All materials shall be in accordance with the current Oregon Standard Specifications.

OREGON STANDARD DRAWINGS

PRECAST PRESTRESSED BOX AND SLAB DETAILS

2024

DATE	REVISION DESCRIPTION
07-2020	Revised steel grade for dowels and tie rods.
07-2020	Updated drawing to current stds.
07-2020	Moved rail anchorage detail to det3465.
06-2022	Revised General Notes. Added breakout Angle Detail.

CALC. BOOK NO. N/A | SDR DATE 08-JUL-2022 | **BR445**

Effective Date: December 1, 2025 - May 31, 2026

JUN-2022

BR445.dgn

NOTE: PROVIDE THE FOREST SERVICE AT LEAST FIVE (5) BUSINESS DAYS ADVANCE NOTIFICATION PRIOR TO CONSTRUCTING IN-STREAM FEATURES. DO NOT BEGIN CONSTRUCTION OF IN-STREAM FEATURES WITHOUT PRIOR AUTHORIZATION FROM THE CO.

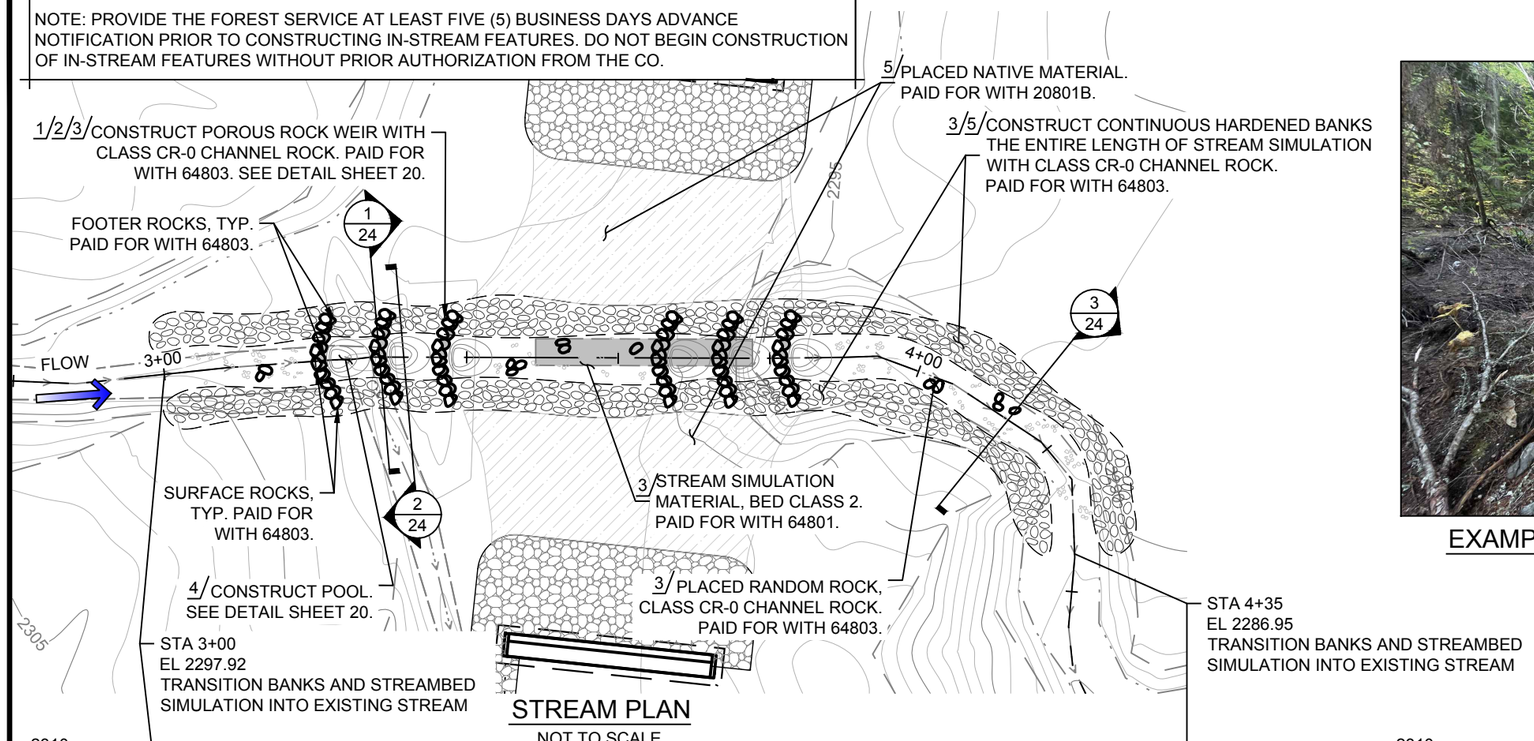

STREAM PLAN

NOT TO SCALE

EXAMPLE RIFFLE & STEP-POOL SECTION

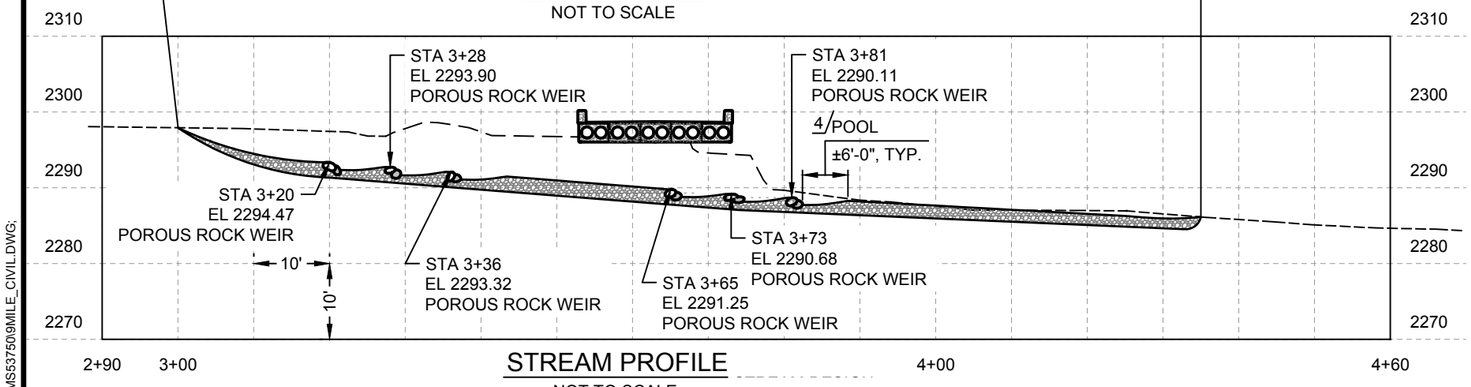

STREAM PROFILE

NOT TO SCALE

BED CLASS 2 STREAMBED SIMULATION ROCK

FIELD MIX GUIDE

PROPORTIONS	CLASS 2
1 UNITS	5" - 2"
2 UNITS	2" - 3/4"
2 UNITS	3/4" - 1/4"
1 UNITS	1/4" - No. 10 (FINES)
1/2 UNITS	< No. 10 (FINES)

FOOTNOTES:

1/ INTER-MIX STREAMBED MATERIAL AS DIRECTED BY CO DURING PLACEMENT OF CHANNEL ROCK INSIDE THE CULVERT TO SEAL VOIDS THROUGHOUT THE SECTION. PAID FOR WITH 64803.

2/ THE FINAL CHANNEL BOTTOM SHOULD BE A DENSE, WELL INTERLOCKED STREAMBED WITH LOW PERMEABILITY. COMPACT EACH LAYER AND FILL SURFACE VOIDS BY WASHING IN FINE MATERIAL. USE WATER PRESSURE TAMPING RODS, AND SIMILAR HAND OPERATED EQUIPMENT TO FORCE FINE MATERIAL INTO ALL SURFACE VOIDS. PAID FOR WITH 64801.

3/ NATIVE MATERIAL MEETING GRADATION FOR THE SPECIFIED BED CLASS, AND CHANNEL ROCK MAY BE SALVAGED AND INCORPORATED INTO THE SIMULATED STREAMBED.

4/ 1'-0" TOLERANCE FOR POOL AND RIFFLE LENGTHS AND 1'-6" TOLERANCE ON CHANNEL WIDTHS TO ACCOUNT FOR NATURAL VARIABILITY.

5/ PLACE NATIVE MATERIAL CONSERVED FROM EXCAVATION BEYOND THE EXTENTS CONTINUOUS HARDENED BANKS UNDER THE BRIDGE. COMPACT IN ACCORDANCE WITH FSSS 209.10 COMPACTION METHOD 4 TO ENSURE FLOOPLAIN HAS LOW PERMEABILITY.

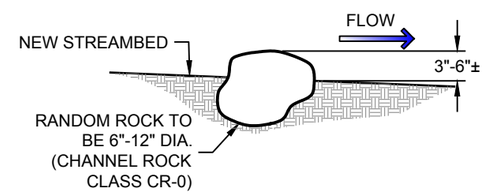

RANDOM ROCK DETAIL

NOT TO SCALE

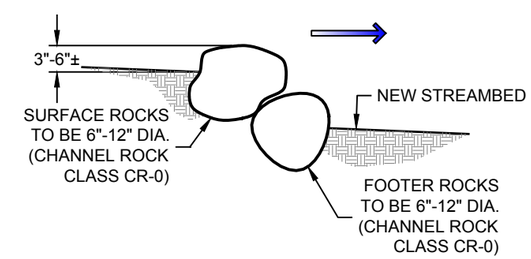

ROCK WEIR EMBEDMENT DETAIL

NOT TO SCALE

USDA FOREST SERVICE

United States Department of Agriculture
Forest Service

REGION 6

PACIFIC NORTHWEST REGION

PROJECT NAME

NINEMILE CREEK BRIDGE DESIGN

RD 6500000 MP 6.674

STRUCTURE NO. 061707000037202

OKANOGAN-WENATCHEE NATIONAL FOREST

WENATCHEE RIVER RANGER DISTRICT

DRAWING TITLE

STREAM SIMULATION

DATE MAR-26

ARCHIVE NO. R34904

DESIGNER A. REILLY

DRAWN A. REILLY

CHECKED B. KAMRUD

PROJECT NO. 7333.30

DWG SHEET NO. 23

SHEET 23 OF 27

3/10/26 16:39 HUNTER.ENZ C:\DJA-PWWORK\DJA-PROD\DMS537509\MILE_CIVIL.DWG;

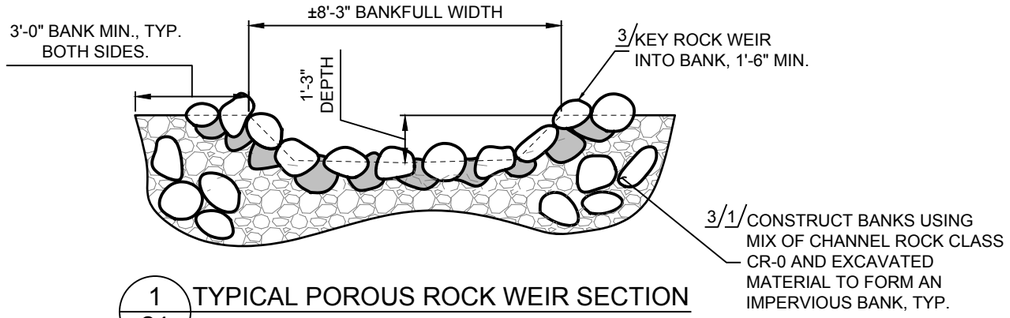

1/24 TYPICAL POROUS ROCK WEIR SECTION

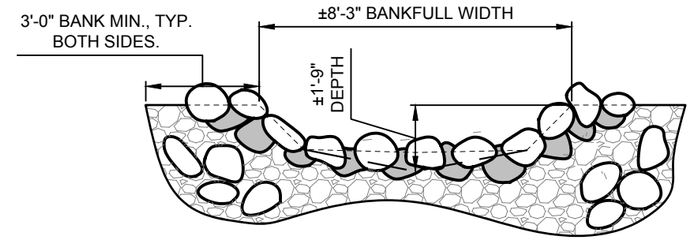

2/24 TYPICAL POOL SECTION

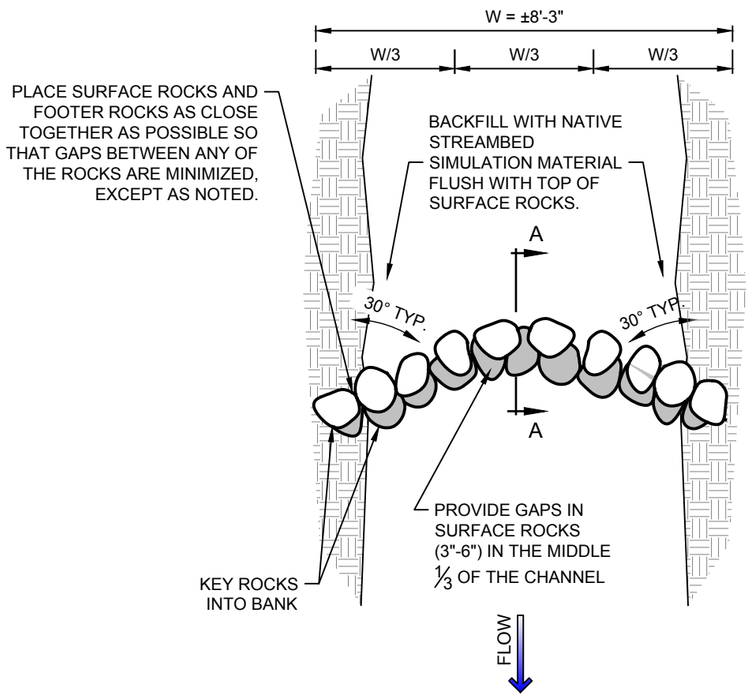

ROCK WEIR PLAN

NOT TO SCALE

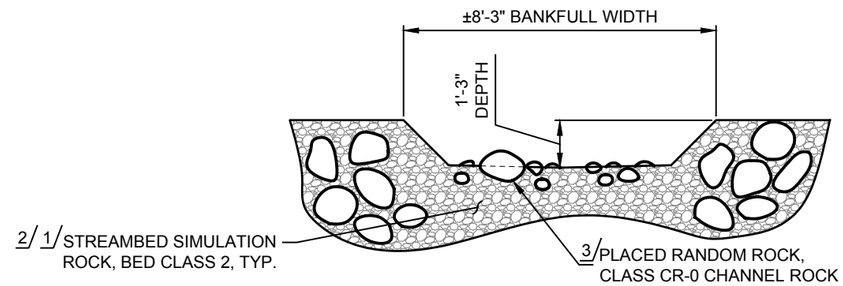

3/24 TYPICAL RIFFLE SECTION

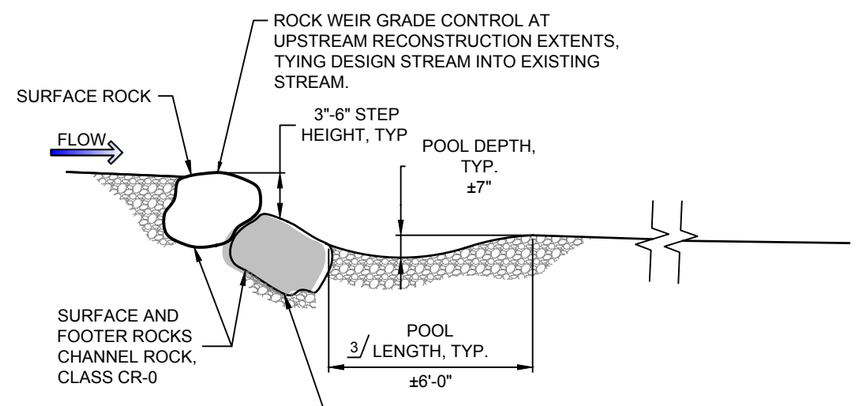

A/24 ROCK WEIR PROFILE

NOT TO SCALE

FOOTNOTES:

1/ INTER-MIX STREAMBED MATERIAL AS DIRECTED BY CO DURING PLACEMENT OF CHANNEL ROCK INSIDE THE CULVERT TO SEAL VOIDS THROUGHOUT THE SECTION.

2/ THE FINAL CHANNEL BOTTOM SHOULD BE A DENSE, WELL INTERLOCKED STREAMBED WITH LOW PERMEABILITY. COMPACT EACH LAYER AND FILL SURFACE VOIDS BY WASHING IN FINE MATERIAL. USE WATER PRESSURE TAMPING RODS, AND SIMILAR HAND OPERATED EQUIPMENT TO FORCE FINE MATERIAL INTO ALL SURFACE VOIDS.

3/ NATIVE MATERIAL MEETING GRADATION FOR THE SPECIFIED BED CLASS, AND CHANNEL ROCK MAY BE SALVAGED AND INCORPORATED INTO THE SIMULATED STREAMBED.

United States Department of Agriculture
Forest Service

REGION 6
PACIFIC NORTHWEST REGION

PROJECT NAME

NINEMILE CREEK
BRIDGE DESIGN

RD 6500000 MP 6.674

STRUCTURE NO.
061707000037202

OKANOGAN-WENATCHEE
NATIONAL FOREST

WENATCHEE RIVER
RANGER DISTRICT

DRAWING TITLE

STREAM DETAILS

DATE MAR-26	
ARCHIVE NO. R34904	
DESIGNER A. REILLY	DWG SHEET NO. 24
DRAWN A. REILLY	
CHECKED B. KAMRUD	
PROJECT NO. 7333.30	SHEET 24 OF 27

3/10/26 16:39 HUNTER.ENZ C:\DJA-PWWORK\DJA-PROD\DMS53750\9MILE_CIVIL.DWG;

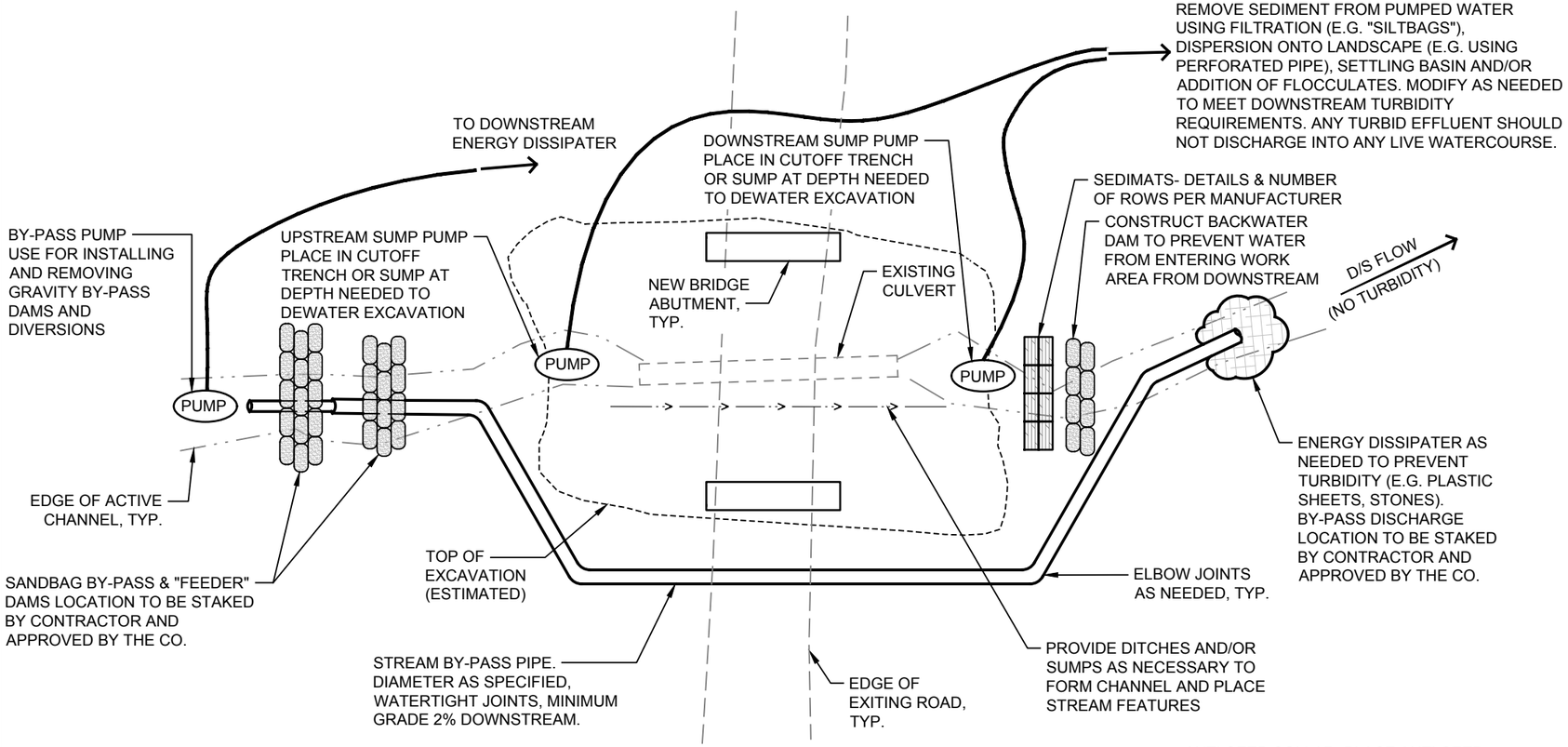

PLAN

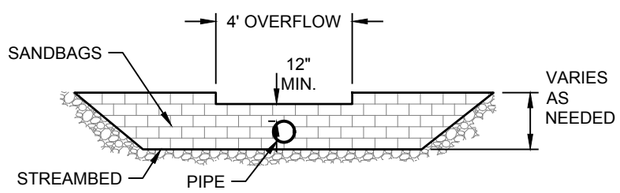

BYPASS DAM ELEVATION VIEW

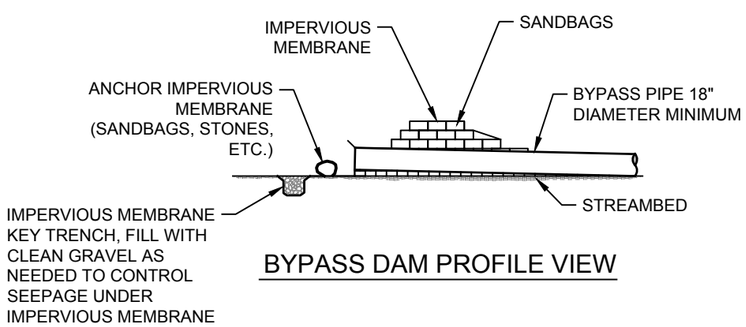

BYPASS DAM PROFILE VIEW

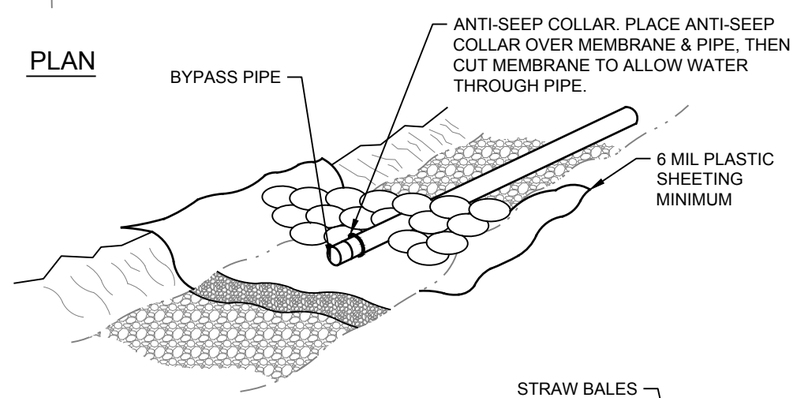

SANDBAG BYPASS DAM DETAILS

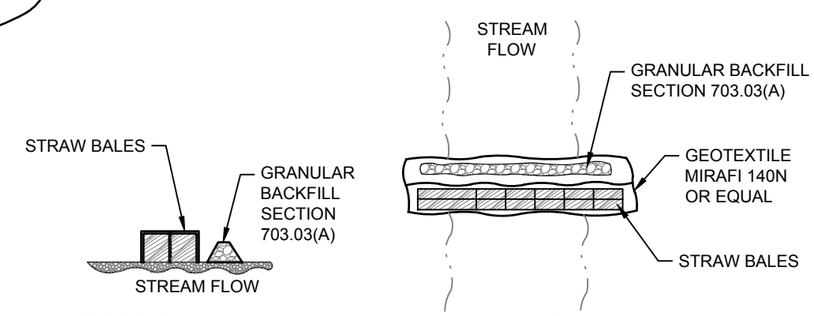

SECTION VIEW

PLAN VIEW

GEOTEXTILE-WRAPPED STRAW BALE SEDIMENT CONTROL WEIR

NOTES:

1. THE PLAN SHOWN HERE IS INTENDED TO REPRESENT THE GENERAL DEWATERING REQUIREMENTS AND NOT APPLICABLE TO A SPECIFIC SITE. SUBMIT A PLAN SPECIFIC TO THE SITE.
2. SUBMIT A DEWATERING PLAN TO THE CO FOR APPROVAL AT LEAST FOURTEEN (14) DAYS PRIOR TO BEGINNING WORK. CONSTRACTOR IS REQUIRED TO FOLLOW NMFS ARBO II WAC 173-201A-200(1)(E) REQUIRMENTS.
3. CONTRACTOR TO DETERMINE THE SIZE OF THE BYPASS PIPE(S).
4. ENSURE THAT THE BYPASS PIPE(S) AND DAM ARE FUNCTIONING PROPERLY. DO NOT PROCEED WITH CONSTRUCTION UNTIL THE IMPLEMENTED DEWATERING PLAN HAS BEEN INSPECTED AND ACCEPTED BY THE CO IN WRITING.
5. ENSURE PUMPS ARE BE CLEAN AND FREE OF LEAKS AND PLACED IN A CONTAINMENT KIT.
6. EXCAVATE DRAW DOWN POOL FOR SUMPS A MINIMUM OF 2 FEET BELOW THE BOTTOM OF THE EXCAVATION AND A MINIMUM OF 5 FEET IN DIAMETER.
7. MAINTAIN ALL ELEMENTS OF THE OPERATION IN ORDER TO DEWATER THE FOUNDATION, FACILITATE CONSTRUCTION, PREVENT HARM TO ALL AQUATIC ORGANISMS AND MINIMIZE SEDIMENT AND TURBIDITY FROM ENTERING THE STREAM. CONSTRUCT THE DEWATERING SYSTEM IN A MANNER WHICH ENABLES USFS BIOLOGISTS TO COLLECT AND TRANSPORT ORGANISMS FROM THE LIVE CHANNEL, JUST BEFORE COMPLETION OF THE DIVERSION DAM.
8. OPERATE PUMPS (PREFERABLY ELECTRIC) DOWNSTREAM OF THE BYPASS DAM IF THE DAM DOES NOT SEAL THOROUGHLY. MAINTAIN A PUMP RUNNING 24 HOURS A DAY IN THE DOWNSTREAM SEDIMENT RETENTION DAM TO DIVERT WATER CONTAINING SEDIMENT TO THE FOREST FLOOR WHERE IT WILL BE FILTERED BEFORE ENTERING BACK INTO THE STREAM. LEAVE PUMPS IN POSITION ON SITE EVEN IF WATER DISCHARGE DROPS CONSIDERABLY, TO BE PREPARED FOR STORM FLOWS.

United States Department of Agriculture
Forest Service

REGION 6
PACIFIC NORTHWEST REGION

PROJECT NAME
NINEMILE CREEK BRIDGE DESIGN
RD 6500000 MP 6.674
STRUCTURE NO. 061707000037202

OKANOGAN-WENATCHEE NATIONAL FOREST
WENATCHEE RIVER RANGER DISTRICT

DRAWING TITLE
DEWATERING REQUIREMENTS

DATE MAR-26	
ARCHIVE NO. R34904	
DESIGNER A. REILLY	DWG SHEET NO. 25
DRAWN A. REILLY	
CHECKED B. KAMRUD	SHEET 25 OF 27
PROJECT NO. 7333.30	

3/10/26 16:39 HUNTER.ENZ C:\DJA-PWWORK\DJA-PROD\DMS537509\MILE_CIVIL.DWG;

SEGMENT	ELEVATION CHANGE (ft)	SEGMENT LENGTH (ft)	GRADIENT	% GRADIENT DIFFERENCE BETWEEN SUCCESSIVE SEGMENTS	MAXIMUM RESIDUAL POOL DEPTH (ft)	NUMBER OF GRADE CONTROLS	DISTANCE BETWEEN GRADE CONTROLS (ft)	% GRADIENT DIFFERENCE WITH DESIGN A (S=7.91%)	% GRADIENT DIFFERENCE WITH DESIGN B (S=5.46%)
A (REFERENCE)	10.20	143.38	7.11%	N/A	0.46	10	13, 5, 7, 14, 9, 1, 17, 5, 55	10.07%	20.90%
B	-0.51	95.82	-0.54%	107.53%	0.14	4	8, 6, 15, 67	106.77%	75.79%
C	10.38	83.26	12.46%	2427.50%	N/A	2	4	57.53%	88.51%
CULVERT									
D	4.87	80.21	6.07%	40.06%	0.37	2	64	23.21%	7.76%
E	3.48	54.40	6.39%	5.26%	N/A	3	15, 24	19.17%	11.80%
F	4.67	65.50	7.13%	11.59%	N/A	2	18	9.81%	21.17%
G	3.85	46.71	8.24%	15.53%	N/A	1	N/A	4.20%	35.18%

LEGEND

- TOP OF BANK/FLOOD PLAIN
- *B* SEGMENT
- GRADE BREAK BEGINNING/END SEGMENT
- POOL
- STREAM CROSS SECTION

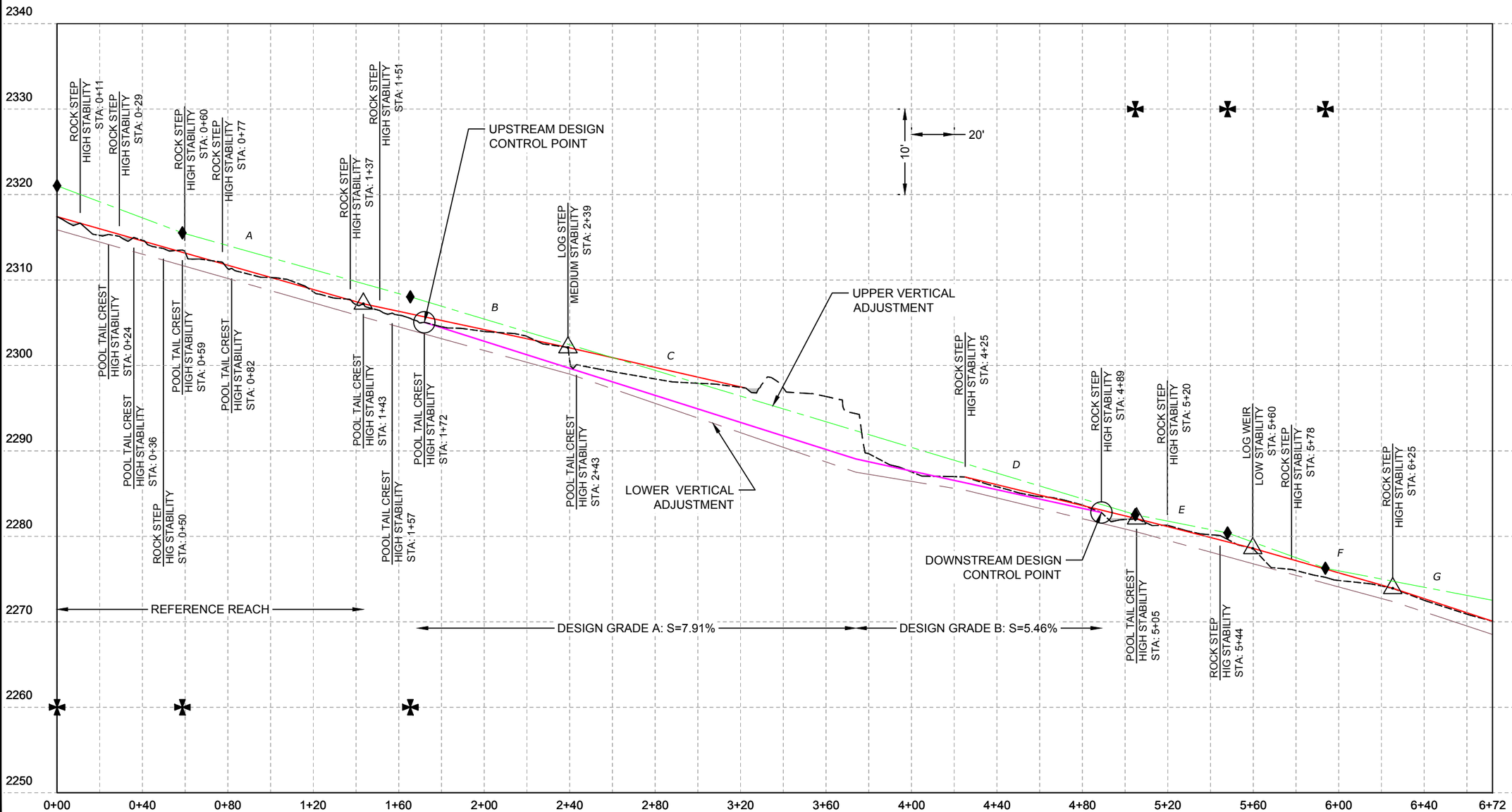

USDA FOREST SERVICE

United States Department of Agriculture
Forest Service

REGION 6
PACIFIC NORTHWEST REGION

PROJECT NAME

NINEMILE CREEK BRIDGE DESIGN

RD 6500000 MP 6.674

STRUCTURE NO. 061707000037202

OKANOGAN-WENATCHEE NATIONAL FOREST

WENATCHEE RIVER RANGER DISTRICT

DRAWING TITLE

LONGITUDINAL PROFILE

DATE
MAR-26

ARCHIVE NO.
R34904

DESIGNER
A. REILLY

DRAWN
A. REILLY

CHECKED
B. KAMRUD

PROJECT NO.
7333.30

DWG SHEET NO.
26

SHEET 26 OF 27

3/10/26 16:39 HUNTER.ENZ C:\DJA-PWWORK\DJA-PROD\DMS537509\MILE_CIVIL.DWG;

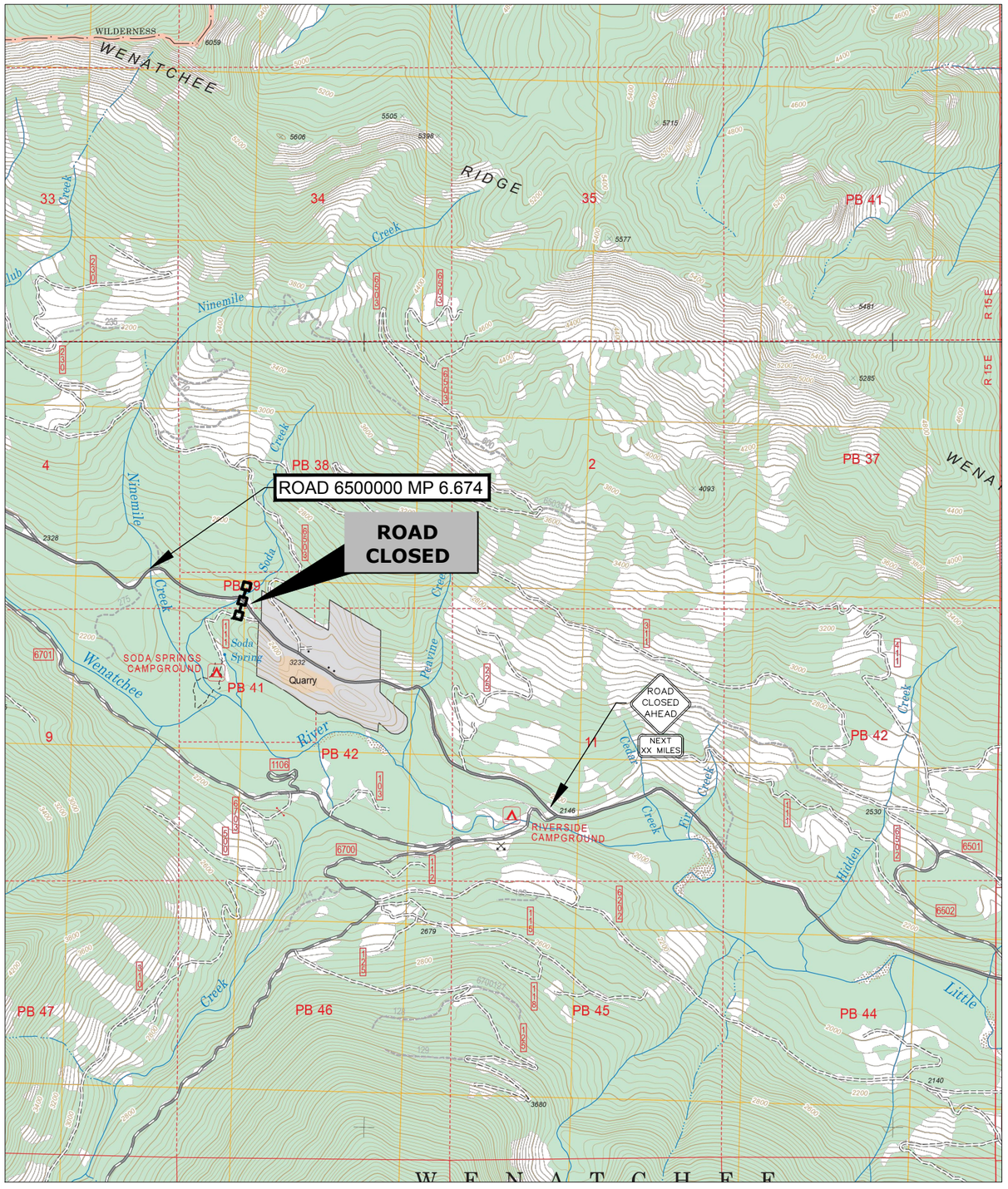

VICINITY MAP

CONCEPTUAL TRAFFIC CONTROL DIAGRAM

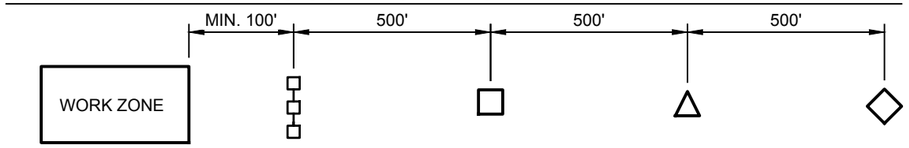

LEGEND

- "TRUCKS AHEAD" 36"x36"
- "ROAD CLOSED AHEAD" 36"x36"
- "ROAD WORK AHEAD" 36"x36"
- ROAD CLOSURE BARRICADE, TYPE III WITH ROAD CLOSED SIGN 30"x18"

SIGNAGE NOTES

1. SIGN DISTANCES AND LOCATIONS MAY BE ADJUSTED BASED ON ROAD CONDITIONS.
2. SIGNAGE MUST MEET MUTCD STANDARDS.
3. IN ADDITION TO THE SIGNS ABOVE, PLACE A "ROAD CLOSED AHEAD, XX MILES" WHERE SHOWN ON THE VICINITY MAP ON THIS SHEET.

TRAFFIC CONTROL NOTES

1. SUBMIT A TRAFFIC CONTROL PLAN FOR REVIEW PER SECTION 156 OF THE FOREST SERVICE SUPPLEMENTAL SPECIFICATIONS (FSSS).
2. THE CONCEPTUAL PLAN SHOWN REPRESENTS THE MINIMUM REQUIREMENTS FOR CLOSURE. THE CONTRACTOR IS RESPONSIBLE TO SUBMIT A TRAFFIC CONTROL PLAN AND FURNISH AND INSTALL ANY ADDITIONAL SIGNS THAT MAY BE REQUIRED BY THEIR OPERATIONS, AND IN ACCORDANCE WITH THE MANUAL ON UNIFORM TRAFFIC CONTROL DEVICES (MUTCD).
3. THE CONTRACTOR IS RESPONSIBLE TO NOTIFY THE CO IN WRITING AT LEAST THIRTY (30) DAYS PRIOR TO ANY PROPOSED ROAD CLOSURE.
4. PERFORM NO WORK THAT INTERFERES OR CONFLICTS WITH TRAFFIC OR EXISTING ACCESS TO THE ROADWAY SURFACE UNTIL A TRAFFIC CONTROL PLAN HAS BEEN APPROVED. POST CONSTRUCTION SIGNS AND TRAFFIC CONTROL DEVICES IN CONFORMANCE WITH MUTCD. ALL REQUIRED SIGNS WILL BE IN PLACE AND APPROVED PRIOR TO BEGINNING WORK ON PROJECT.
5. THE CONTRACTOR IS RESPONSIBLE TO MAINTAIN ALL TRAFFIC CONTROL SIGNS. IMMEDIATELY REPLACE ANY MISSING OR DEFACED SIGNS. REMOVE ALL SIGNS AND BARRICADES AT THE END OF THE CLOSURE PERIOD.
6. SIGN DISTANCES AND LOCATIONS MAY BE ADJUSTED BASED ON ROAD CONDITIONS

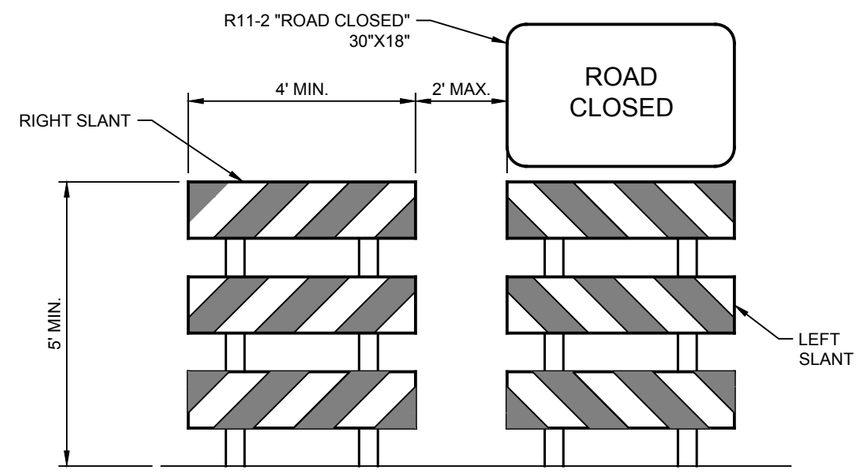

TYPE III BARRICADE FOR CLOSURE

United States Department of Agriculture
Forest Service

REGION 6
PACIFIC NORTHWEST REGION

PROJECT NAME
NINEMILE CREEK BRIDGE DESIGN
RD 6500000 MP 6.674
STRUCTURE NO. 061707000037202

OKANOGAN-WENATCHEE NATIONAL FOREST
WENATCHEE RIVER RANGER DISTRICT

DRAWING TITLE
TRAFFIC CONTROL

DATE MAR-26	
ARCHIVE NO. R34904	
DESIGNER P. DONNER	DWG SHEET NO. 27
DRAWN P. DONNER	
CHECKED A. GROESBECK	SHEET 27 OF 27
PROJECT NO. 7333.30	

3/18/26 10:40 PATRICIA.DONNER C:\DJA-PW\WORK\DJA-PROD\DMS53770\7333.30 COVERS.DWG;

NINEMILE CREEK
ROAD BRIDGE DESIGN
ROAD CROSS SECTIONS

PREPARED BY :

SHEET XS1 OF XS5

1+80.00

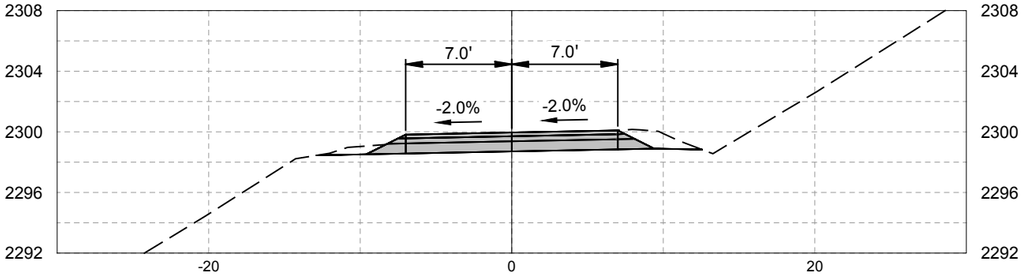

1+71.23

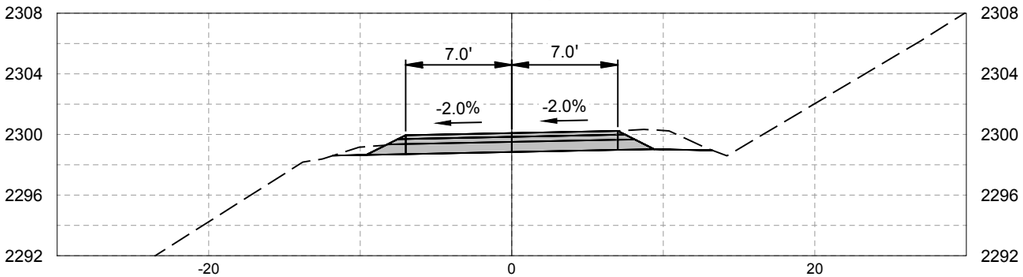

1+60.00

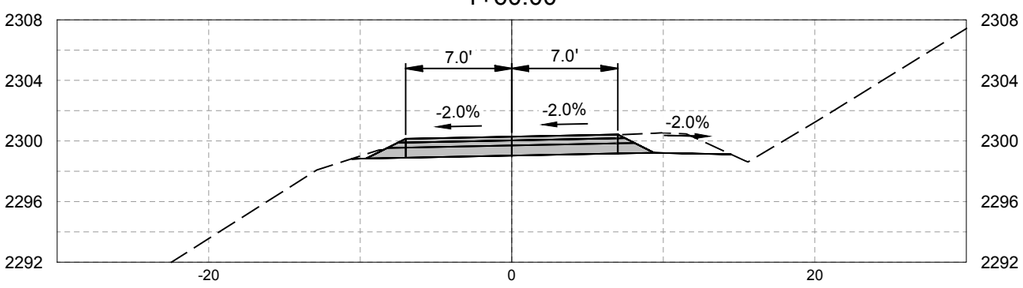

1+40.00

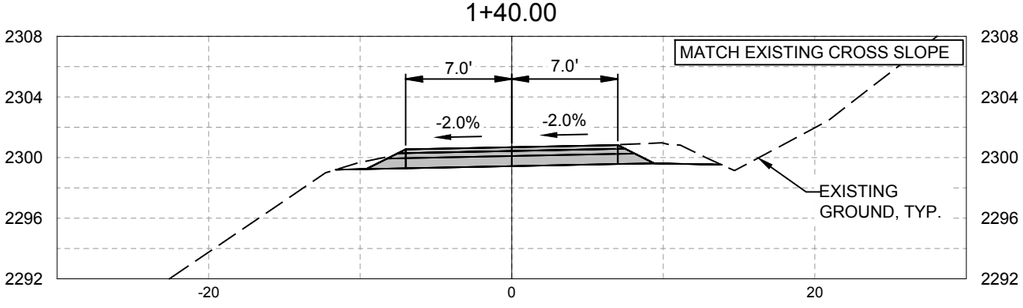

2+60.00

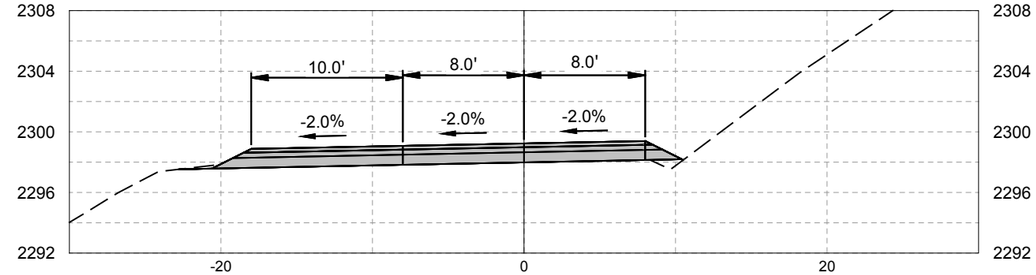

2+40.00

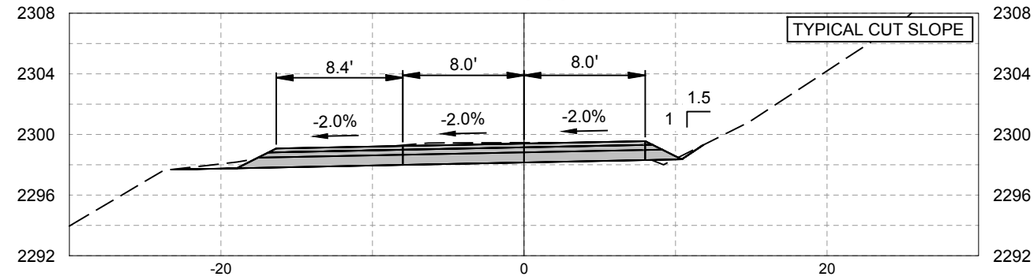

2+20.00

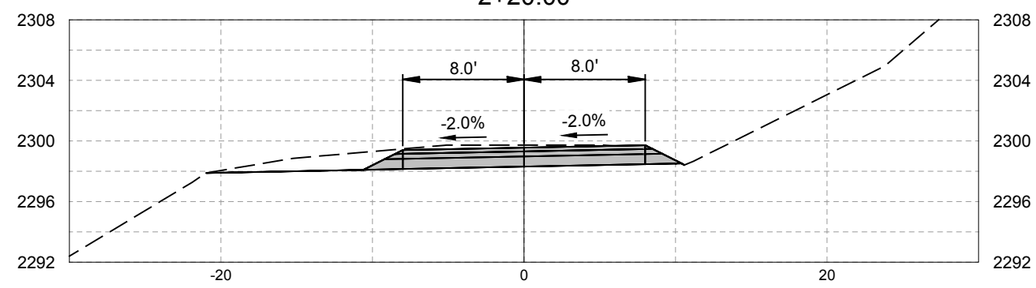

2+00.00

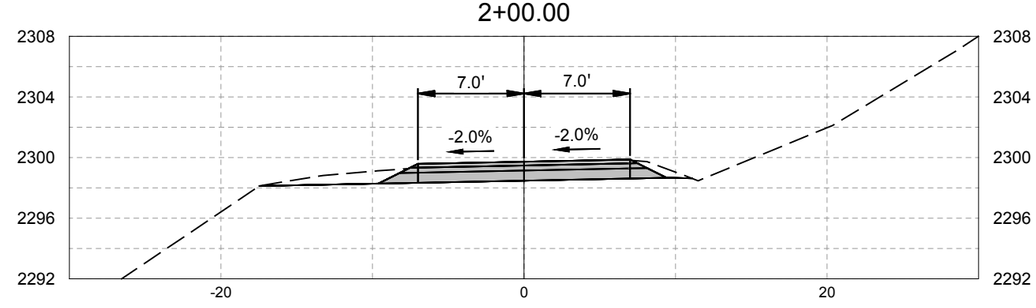

NINEMILE CREEK
ROAD BRIDGE DESIGN
ROAD CROSS SECTIONS

PREPARED BY :

SHEET XS2 OF XS5

3+40.00

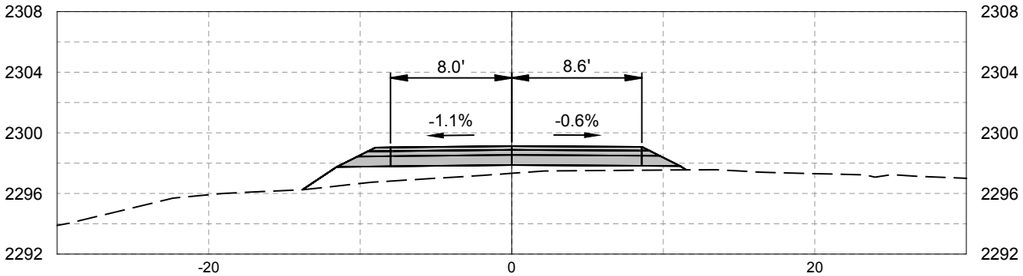

3+20.00

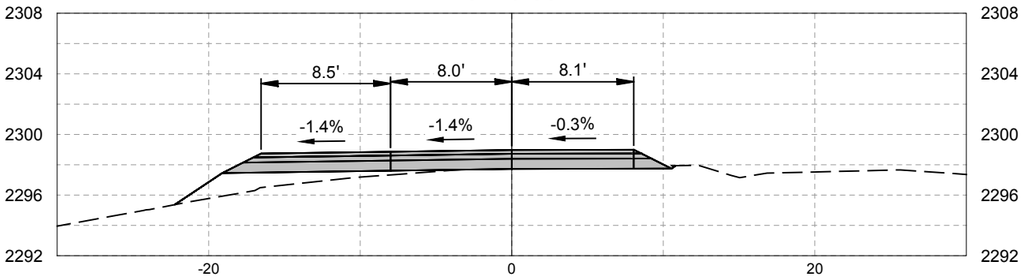

3+00.00

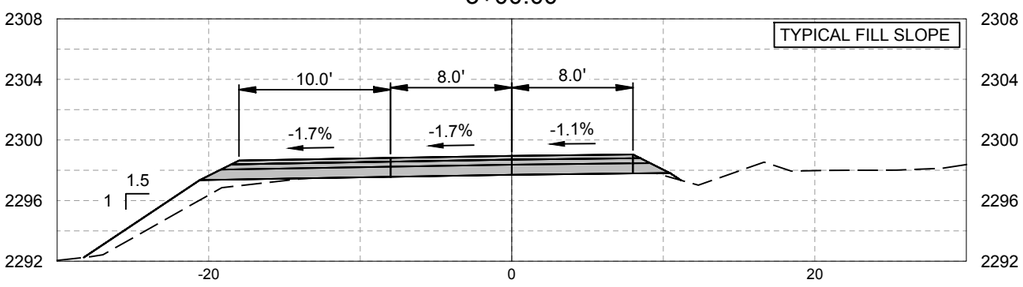

2+80.00

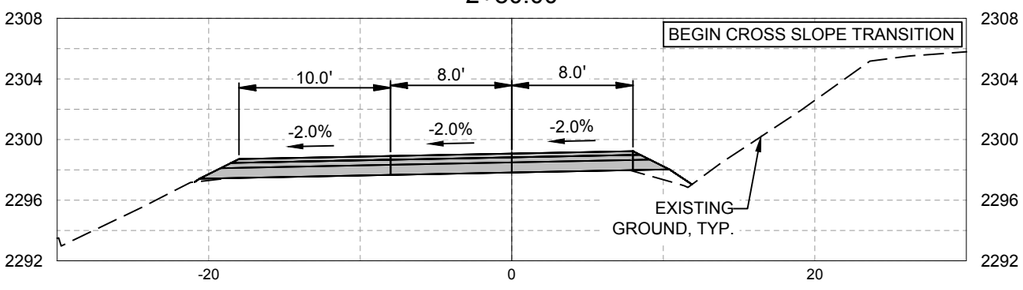

4+28.98

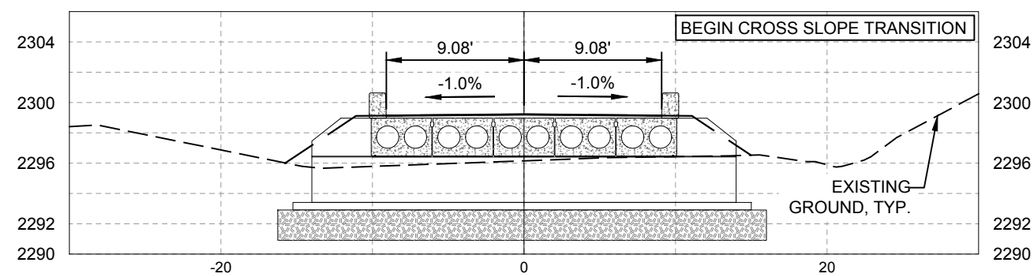

4+28.48

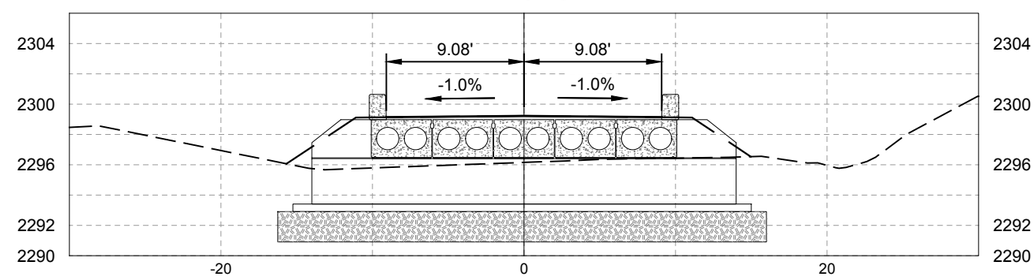

3+49.48

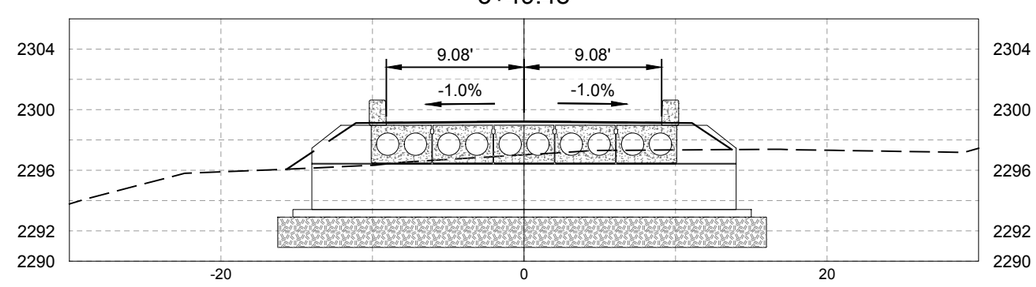

3+48.98

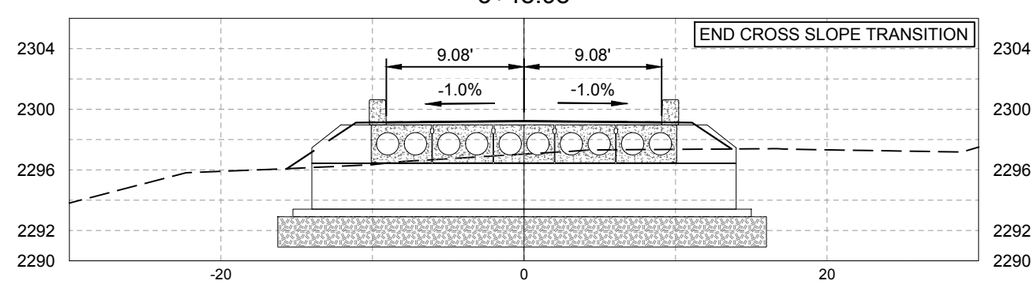

NINEMILE CREEK
ROAD BRIDGE DESIGN
ROAD CROSS SECTIONS

PREPARED BY :

SHEET XS3 OF XS5

4+80.00

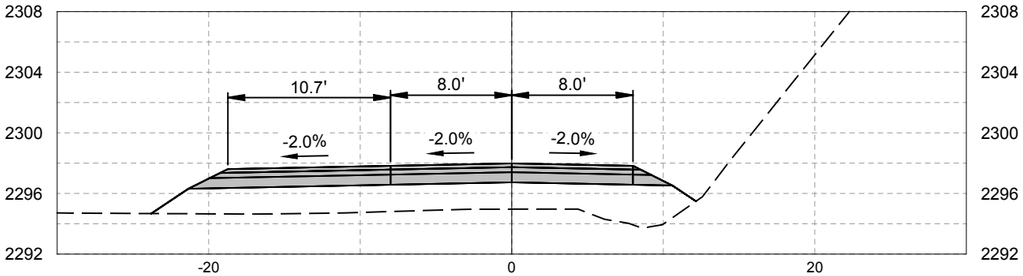

4+60.00

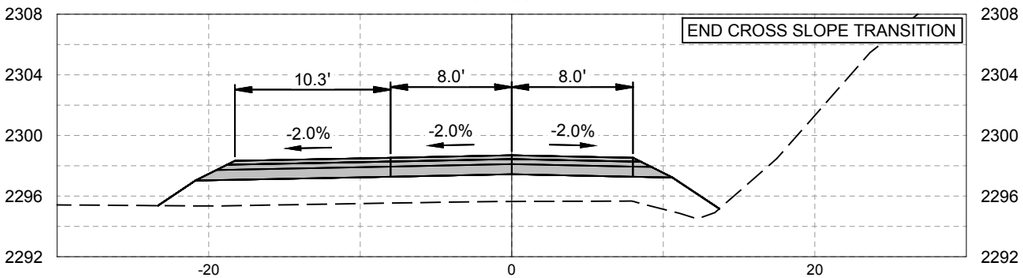

4+40.00

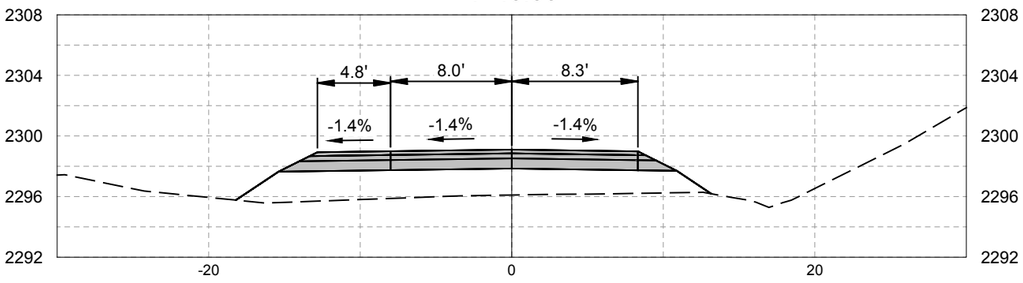

4+34.31

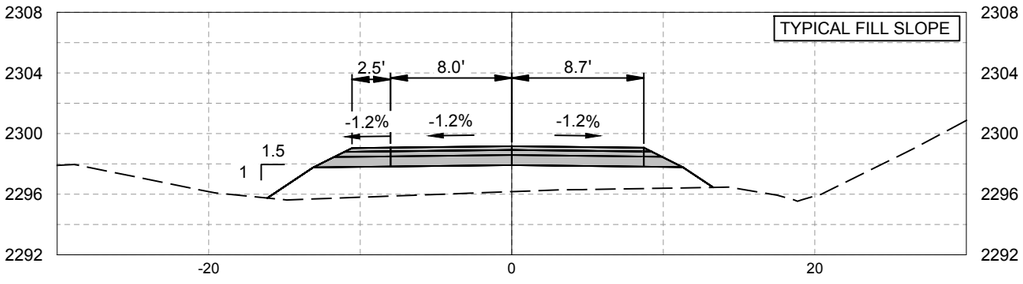

5+25.88

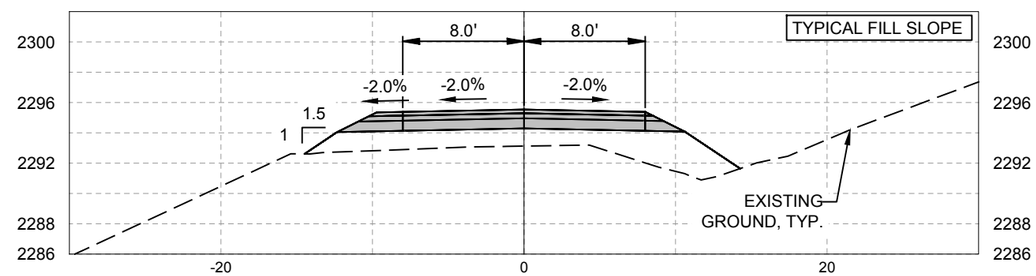

5+20.00

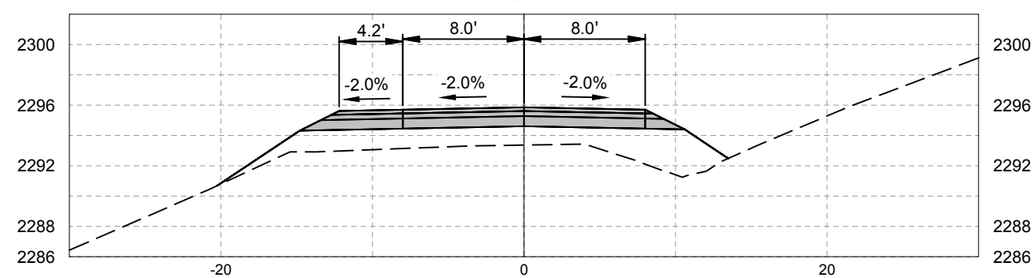

5+14.59

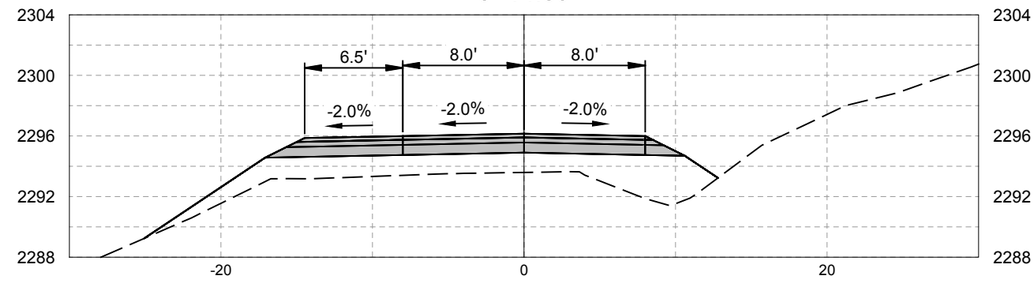

5+00.00

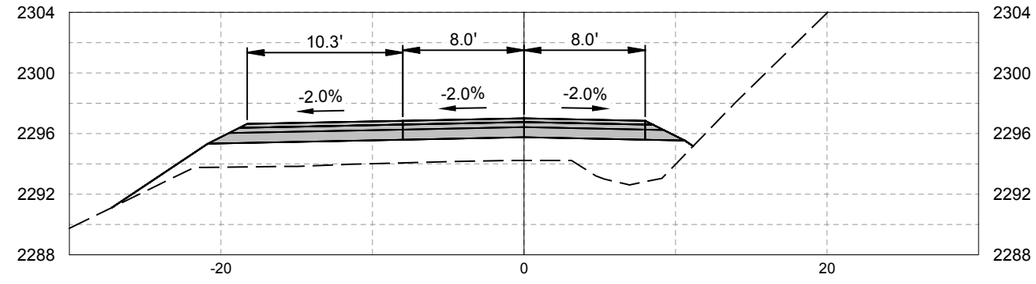

NINEMILE CREEK
ROAD BRIDGE DESIGN
ROAD CROSS SECTIONS

PREPARED BY :

SHEET XS4 OF XS5

6+00.00

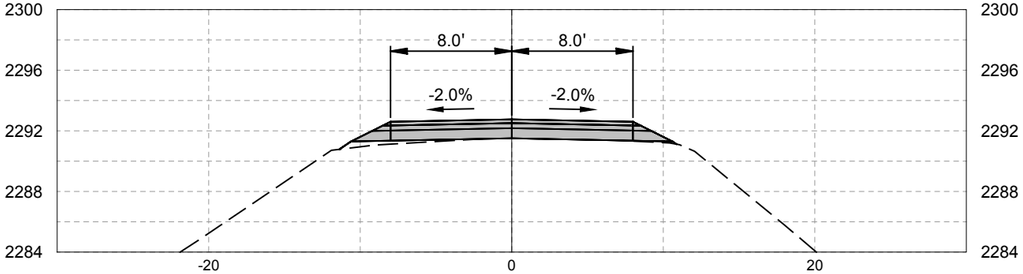

6+80.00

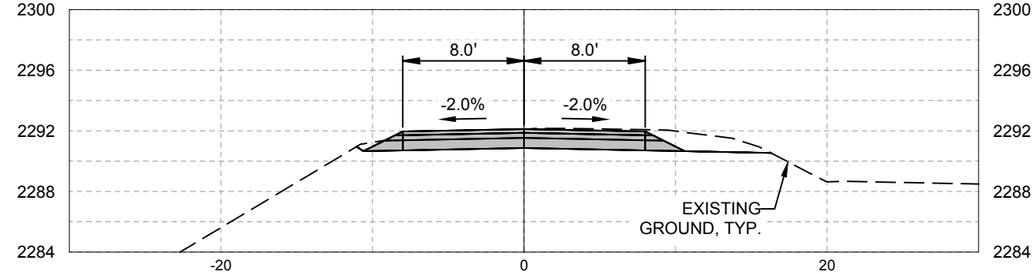

5+80.00

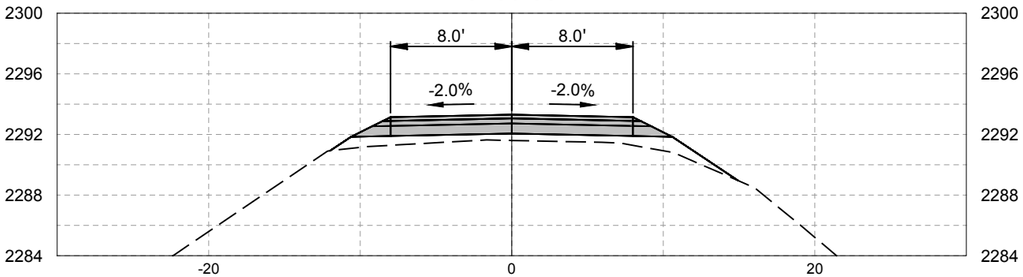

6+60.00

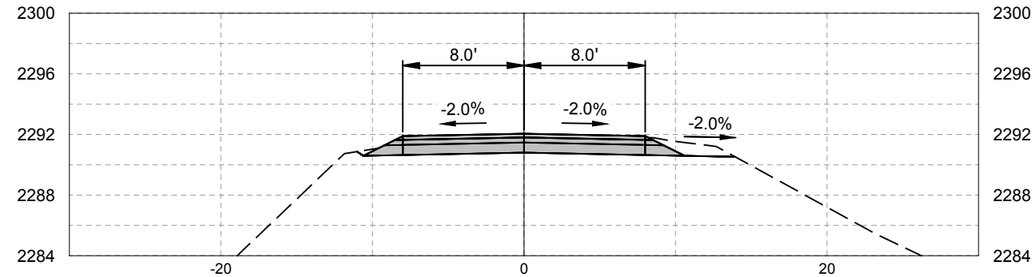

5+60.00

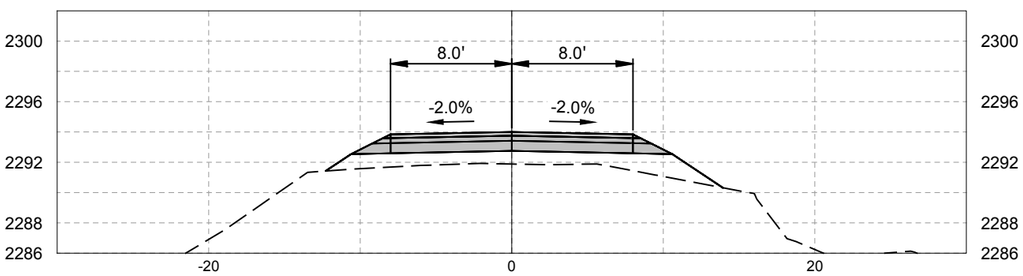

6+40.00

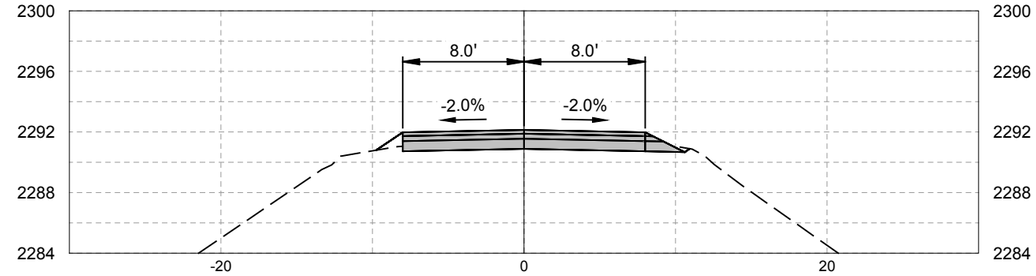

5+40.00

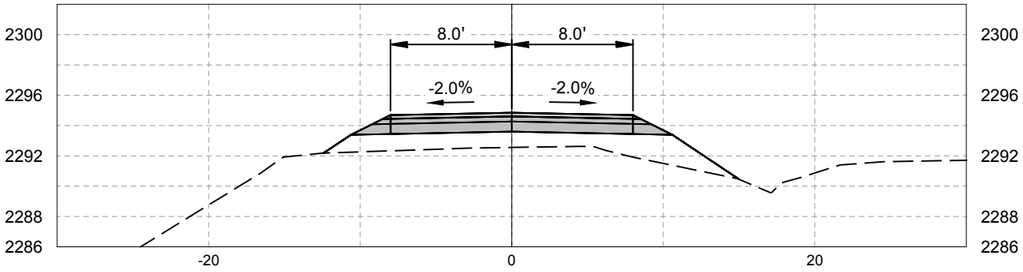

6+20.00

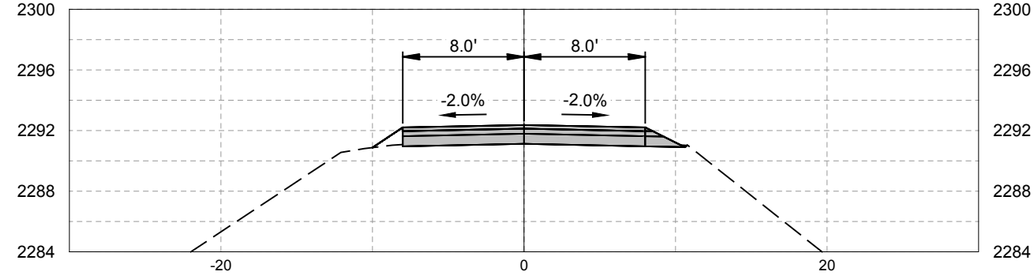

NINEMILE CREEK
ROAD BRIDGE DESIGN
ROAD CROSS SECTIONS

PREPARED BY :

SHEET XS5 OF XS5
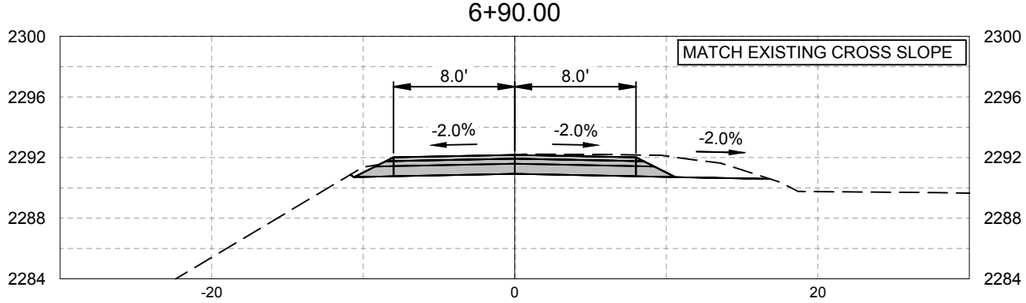
6+90.00