U.S. DEPARTMENT OF AGRICULTURE
FOREST SERVICE
REGION ONE

ASHLEY LAKE NORTH CAMPGROUND RENOVATION

FLATHEAD NATIONAL FOREST
TALLY LAKE RANGER DISTRICT
FLATHEAD COUNTY

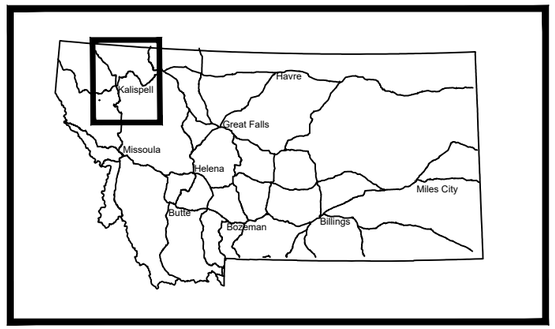

MONTANA INDEX MAP
NOT TO SCALE

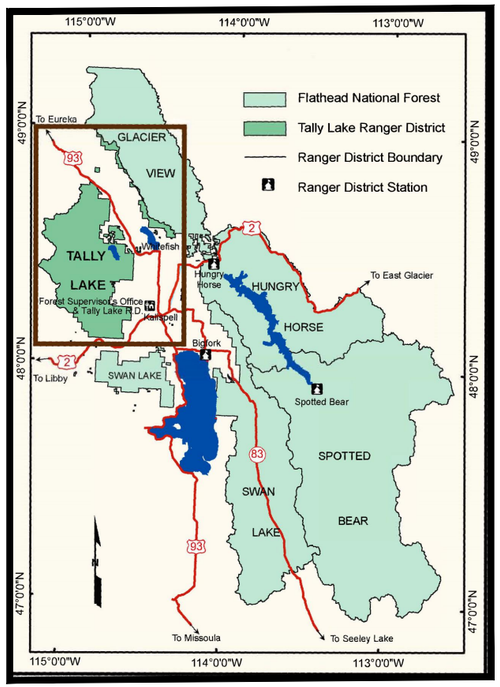

LOCATION MAP
NOT TO SCALE

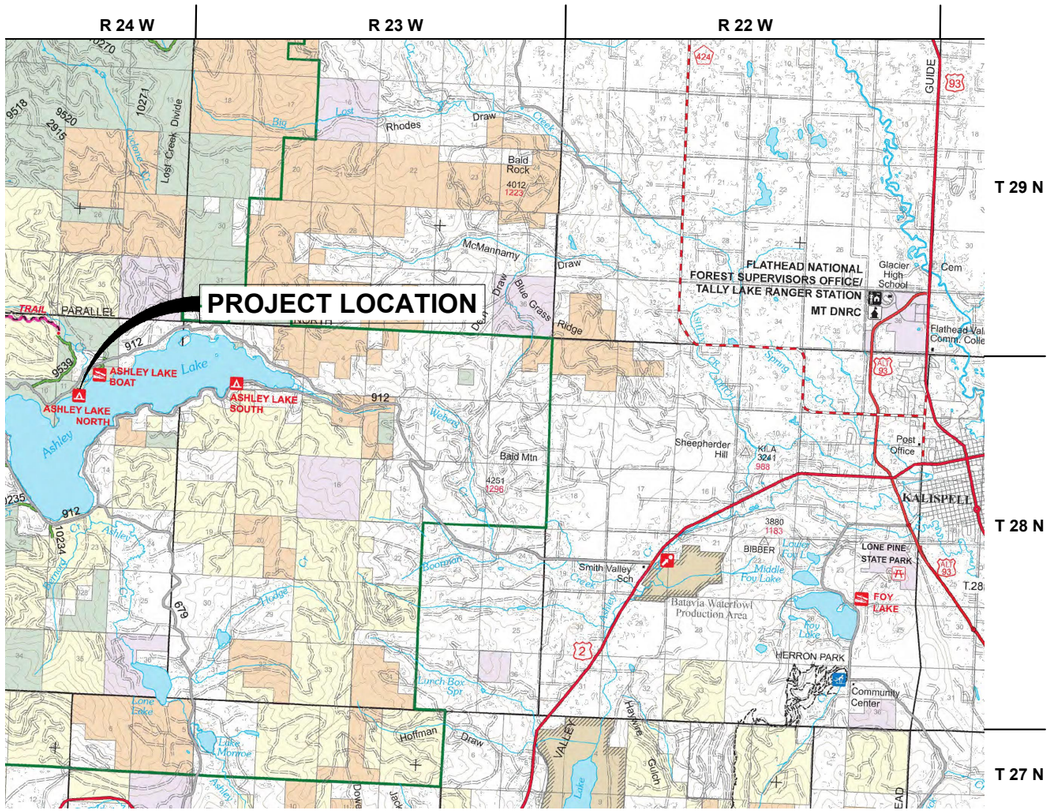

AREA MAP
NOT TO SCALE

SHEET INDEX

PROJECT: 005
DATE: 05/20/2026

CONSTRUCTION PLANS

SHEET 1	TITLE SHEET
SHEET 2	VICINITY MAP
SHEET 3 - 4	SUMMARY OF QUANTITIES
SHEET 5	PROJECT NOTES
SHEET 6	EXISTING FEATURES
SHEET 7	LAYOUT SHEET
SHEET 8	SITE PLAN
SHEET 9 - 10	CAMPGROUND LOOP ROAD PLAN & PROFILE
SHEET 11 - 12	WALKING PATH PLAN & PROFILE
SHEET 13	ROAD TYPICALS & CAMP SPUR DETAILS
SHEET 14	CAMP SPUR PROFILES
SHEET 15	CRUSHED AGGREGATE QUANTITIES
SHEET 16	FIRE RING, WHEELSTOP & SITE PAD DETAILS
SHEET 17	PICNIC TABLE DETAILS
SHEET 18	TENT PAD & STORAGE SHED PAD DETAILS
SHEET 19	BARRIER ROCK,FOOD STORAGE LOCKER & FEE TUBE
SHEET 20	HOST SITE UTILITIES & HOLDING TANK DETAILS
SHEET 21	BENCH & MOORING POST
SHEET 22	OVERLAPPING TIMBER STEP
SHEET 23	SINGLE PANEL KIOSK DETAILS
SHEET 24	PRECAST CONCRETE SST DETAILS
SHEET 25 - 32	SIGN PLAN PLACEMENT LOCATIONS & TYPICAL INSTALLATION DETAILS
SHEET 33	OPTION ITEM 1 - NEW WELL DEVELOPMENT
SHEET 34	OPTION ITEM 2 - HAND PUMP INSTALLATION
SHEET 35 - 40	OPTION ITEM 3 - NEW CONCRETE WELL HOUSE, PIPING, ELECTRICAL & CAMPGROUND WATER SYSTEM

DESIGNED BY:

PROJECT ENGINEER
FLATHEAD NATIONAL FOREST — DATE

RECOMMENDED BY:

DISTRICT RANGER
TALLY LAKE RANGER DISTRICT
FLATHEAD NATIONAL FOREST — DATE

APPROVED BY:

FOREST ENGINEER
FLATHEAD NATIONAL FOREST — DATE

APPROVED BY:

FOREST SUPERVISOR
FLATHEAD NATIONAL FOREST — DATE

APPROVED BY:

FOREST LANDSCAPE ARCHITECT
FLATHEAD NATIONAL FOREST — DATE

APPROVED BY:

NAMP LANDSCAPE ARCHITECT
NORTHERN REGION — DATE

APPROVED BY:

DIRECTOR OF ENGINEERING
NORTHERN REGION — DATE

NO.	REVISION DESCRIPTION	BY	DATE
1			
2			

SET NO.
SHEET NO. 1

C:\Users\cllewis\OneDrive - USDA\Desktop\Project Files\2025\Ashley North Campground\04. CAD\ASHLEYNORTH_CG_SHEETSET ACAD\DWG\Ashley North Campground.dwg

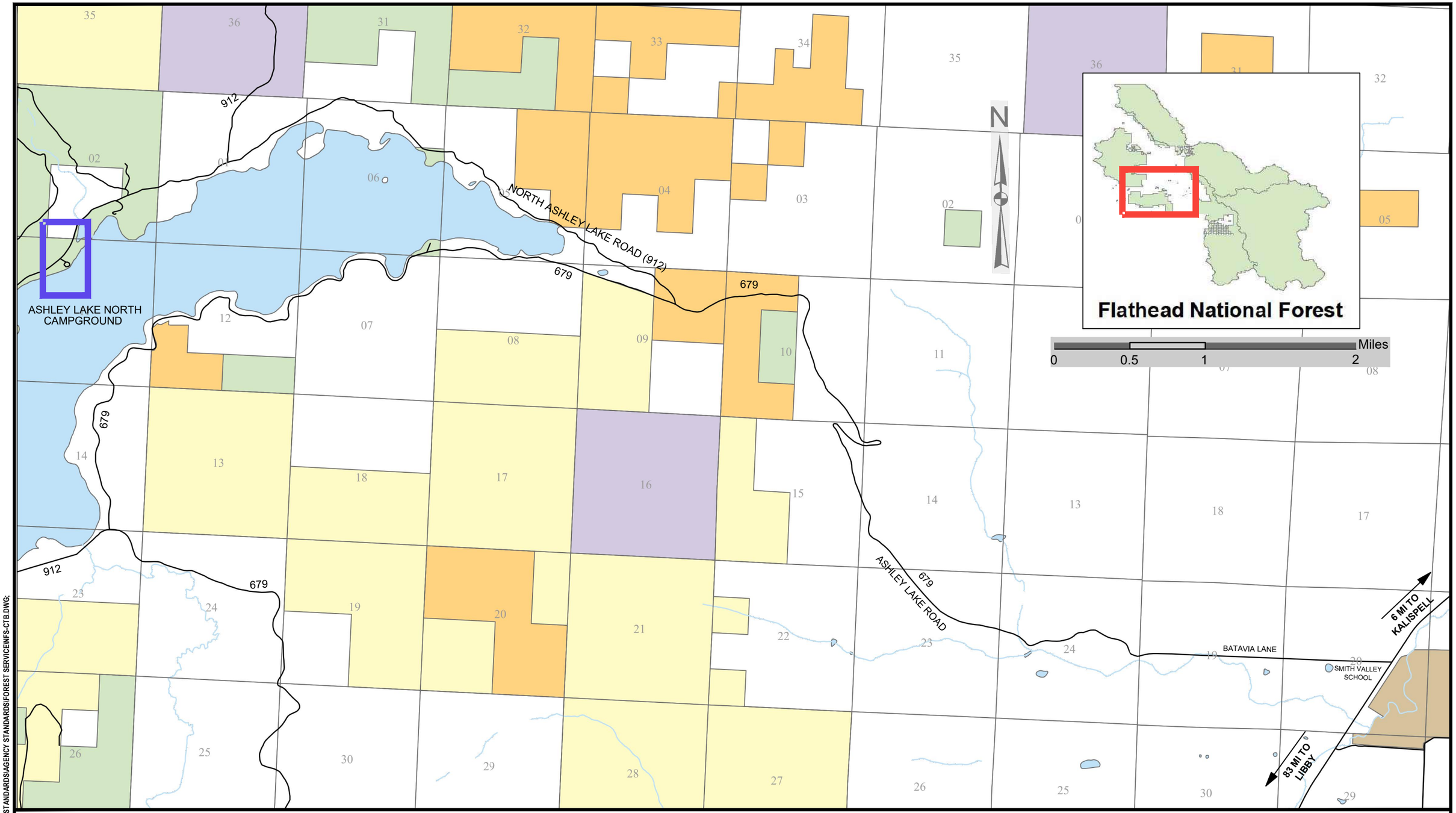

9/28/18 07:07 MARKL F:_CAD STANDARDS\AGENCY STANDARDS\FOREST SERVICE\NFS-CTB.DWG;

United States Department of Agriculture
Forest Service

REGION 1
NORTHERN REGION

PROJECT NAME
ASHLEY LAKE NORTH CAMPGROUND RENOVATION
FLATHEAD NATIONAL FOREST
TALLY LAKE RANGER DISTRICT

DRAWING TITLE
VICINITY MAP

DATE	DESIGNER	CHECKED	DWG SHEET NO.	SHEET
05/20/2026	CL3	C. STEEN	2	2 OF 40

NO.	REVISION DESCRIPTION	BY	DATE

ASHLEY LAKE NORTH CAMPGROUND

SUMMARY OF ESTIMATED QUANTITIES

ITEM NO	DESCRIPTION	UNITS	TOTAL
15101-0000	MOBILIZATION	LUMP SUM	1
20102-0000	CLEARING AND GRUBBING, DISPOSAL METHOD e, f & g -- NEW LOOP ROAD, PARKING AREA, CAMP SPURS & WALKING PATHS	LUMP SUM	1
20401-1000	ROADWAY EXCAVATION, COMPACTION METHOD B, TOLERANCE CLASS F -- CONSTRUCT NEW LOOP ROAD	CUBIC YARD*	473
20401-2000	WALKING PATH EXCAVATION, COMPACTION METHOD B, TOLERANCE CLASS F -- CONSTRUCT WALKING PATHS & BENCH AREAS	CUBIC YARD*	88
20401-3000	CAMP SPUR EXCAVATION, COMPACTION METHOD B, TOLERANCE CLASS F -- CONSTRUCT NEW CAMP SPURS	EACH	13
20401-4000	PARKING AREA EXCAVATION, COMPACTION METHOD B, TOLERANCE CLASS F -- CONSTRUCT NEW PARKING AREA	CUBIC YARD*	97
20475-1000	CONSTRUCT TABLE / FIRE RING PADS, COMPACTION B, TOLERANCE CLASS E	EACH	13
20446-0000	CONSTRUCT OVERLAPPING TIMBER STEP, COMPACTION E, TOLERANCE CLASS C (INCLUDES TIMBERS & HARDWARE)	LINEAL FOOT*	70
20447-0000	CONSTRUCT TENT PAD, COMPACTION E, TOLERANCE CLASS C (INCLUDES TIMBERS & HARDWARE)	EACH	12
20470-0000	PLACED BARRIER ROCK, 3' DIAMETER (COMMERCIAL SOURCE)	EACH	80
30201-1000	3/4" CRUSHED AGGREGATE SURFACE COURSE, GRADE G, IN-PLACE MEASURE (NEW LOOP ROADS, SPURS & PARKING AREA), COMPACTION METHOD 1 (204.11(d)), COMMERCIAL SOURCE	CUBIC YARD*	1093
30201-1100	AGGREGATE SURFACE COURSE, 1/2" CRUSHED, GRADE T, IN-PLACE MEASURE (SST, WALKING PATHS, TABLE, TENT & MISC. PADS), COMPACTION METHOD 1 (204.11 (d)), COMMERCIAL SOURCE	CUBIC YARD*	450
60915-1000	PORTLAND CEMENT CONCRETE WHEEL STOP (EIGHT FOOT LENGTH)	EACH	9
62201-3000	EQUIPMENT RENTAL, HYDRAULIC EXCAVATOR WITH THUMB	HOUR	45
62201-0025	EQUIPMENT RENTAL, 12 YD. DUMP TRUCK	HOUR	45
62201-1125	EQUIPMENT RENTAL, CRAWLER DOZER	HOUR	45
62510-2100	TURF ESTABLISHMENT, SEEDING HYDRAULIC METHOD w / MULCH (NEW LOOP ROAD, SPURS & PARKIING AREA)	SQUARE FOOT*	8511
62553-2000	TURF ESTABLISHMENT, DRY METHOD SEEDING, DRY METHOD MULCHING (WALKING PATH)	SQUARE FOOT*	2821
63303-0910	SIGN & POST INSTALLATION (GOVERNMENT FURNISHED SIGN PANELS -- CONTRACTOR FURNISHED POST, HARDWARE, SQUARE STEEL TUBE, & CONCRETE)	LUMP SUM	1
63301-1000	CAMPGROUND ENTRY SIGN, (GOVERNMENT FURNISHED SIGN PANELS -- CONTRACTOR FURNISHED WOOD, HARDWARE & CONCRETE)	EACH	1
R92001	MOORING POSTS, (CONTRACTOR FURNISHED MATERIALS)	EACH	2
R93002	SINGLE PANEL KIOSK (GOVERNMENT FURNISHED SIGN PANEL -- CONTRACTOR FURNISHED WOOD, CONCRETE & HARDWARE)	EACH	2
R93004	KIOSK FEE TUBE, (CONTRACTOR FURNISHED MATERIALS)	EACH	1
R94001	FOOD STORAGE LOCKERS, (CONTRACTOR FURNISHED FOOD STORAGE LOCKERS, CONCRETE & HARDWARE)	EACH	6
R94001A	FOOD STORAGE LOCKER RELOCATION, (GOVERNMENT FURNISHED FOOD STORAGE LOCKER -- CONTRACTOR FURNISHED CONCRETE & HARDWARE)	EACH	1
R97105	CONCRETE / WOOD PICNIC TABLE, (CONTRACTOR FURNISHED MATERIALS)	EACH	13
R97206	STEEL FIRE RING, 32-INCH DIAMETER, (CONTRACTOR FURNISHED MATERIALS)	EACH	13
R97301	STEEL / WOOD BENCH WITH BACKREST AND ARMREST (CONTRACTOR FURNISHED MATERIALS)	EACH	4
R97401	STORAGE SHED RELOCATION (8' x 10'), (GOVERNMENT FURNISHED SHED -- CONTRACTOR FURNISHED CONCRETE SLAB)	EACH	1
R97501	PRECAST CONCRETE VAULT TOILET, (RIGHT HAND THRU SCREEN FLOOR PLAN)	EACH	1
R98006	HOST SITE SEWER CONNECTION, SEPTIC RISER REPLACEMENT, 4" x 24' SCHEDULE 40 PVC WATERLINE SLEEVE (X3) (CONTRACTOR FURNISHED MATERIALS)	LUMP SUM	1

* DENOTES CONTRACT QUANTITY

9/28/18 07:07 MARKL F:_CAD STANDARDS\AGENCY STANDARDS\FOREST SERVICE\NFS-CTB.DWG;

United States Department of Agriculture
Forest Service

REGION 1
NORTHERN REGION

PROJECT NAME
ASHLEY LAKE NORTH CAMPGROUND RENOVATION
FLATHEAD NATIONAL FOREST
TALLY LAKE RANGER DISTRICT

DRAWING TITLE
SUMMARY OF QUANTITIES

DATE	DESIGNER	CHECKED	DWG SHEET NO.	SHEET
05/20/2026	CL3	C. STEEN	3	3 OF 40

NO.	REVISION DESCRIPTION	BY	DATE
△			
△			
△			

ASHLEY LAKE NORTH CAMPGROUND

OPTION ITEMS SUMMARY OF ESTIMATED QUANTITIES

OPTION ITEM 1 NEW WELL DEVELOPMENT			
ITEM NO	**DESCRIPTION**	**UNITS**	**TOTAL**
01000-1	MOBILIZATION	LUMP SUM	1
02525-1	DRILL WELL	LINEAL FEET	200
02525-2	SURFACE SEAL	LUMP SUM	1
02525-3	STEEL WELL CASING	LINEAL FEET	175
02525-4	WELL SCREEN AND/OR PERFORATED CASING	LINEAL FEET *	25
02525-5	WELL DEVELOPMENT / WELL PUMP TEST / AQUIFER TEST	LUMP SUM	1
02525-6	WELL COMPLETION	LUMP SUM	1

OPTION ITEM 2 NEW HAND PUMP INSTALLATION			
ITEM NO	**DESCRIPTION**	**UNITS**	**TOTAL**
43230-1	CONSTRUCT CONCRETE SLAB WITH DRAIN AND DRAIN VAULT	LUMP SUM	1
43230-2	INSTALL POTABLE WATER SUPPLY HAND PUMP	LUMP SUM	1

OPTION ITEM 3 NEW CONCRETE WELL HOUSE, WELL HOUSE PIPING, WELL HOUSE ELECTRICAL, & INSTALL WATER SYSTEM			
ITEM NO	**DESCRIPTION**	**UNITS**	**TOTAL**
01000-1	MOBILIZATION	LUMP SUM	1
13340	FABRICATED PRECAST CONCRETE WELL HOUSE	LUMP SUM	1
02615-1	WELL PUMP & WELL HOUSE PIPING	LUMP SUM	1
16000-1	WELL HOUSE ELECTRICAL	LUMP SUM	1
02713-1	INSTALL 1-1/2in HDPE WATER LINE AND FITTINGS	LINEAL FEET *	800
02713-2	CAMPGROUND WATER HYDRANT w / CONCRETE PAD & VALVE BOX	EACH	3
02713-3	HOST SITE WATER HYDRANT w / AGGREGATE PAD & VALVE BOX	EACH	1
02713-4	WATER SYSTEM DRAIN VAULT	EACH	1

DENOTES CONTRACT QUANTITY

*

OPTION ITEM 1 : CONSTRUCT NEW WELL DEVELOPMENT IN COMPLIANCE WITH MONTANA DEQ REGULATIONS AND APPLICABLE FOREST SERVICE SUPPLEMENTAL SPECIFICATIONS (FSSS).

OPTION ITEM 2: CONSTRUCTION AND ACCEPTANCE OF OPTION ITEM 2 IS DIRECTLY CORRELATED TO THE RESULTS OF THE NEW WELL DEVELOPMENT WATER YIELD TESTS OF OPTION ITEM 1. IF WELL YIELD IS BELOW 10 gpm, OPTION 2 WILL BE AWARDED.

IF AWARDED, FURNISH AND CONSTRUCT NEW HAND PUMP INSTALLATION AS DESCRIBED IN THE PLANS, IN COMPLIANCE WITH APPLICABLE FOREST SERVICE SUPPLEMENTAL SPECIFICATIONS (FSSS), AND ASSEMBLE ACCORDING TO MANUFACTURE SPECIFICATIONS

OPTION ITEM 3: CONSTRUCTION AND ACCEPTANCE OF OPTION ITEM 3 IS DIRECTLY CORRELATED TO THE RESULTS OF THE NEW WELL DEVELOPMENT WATER YIELD TESTS OF OPTION ITEM 1. IF WELL YIELD IS ABOVE 10 gpm, OPTION 3 WILL BE AWARDED.

CONSTRUCT COMPONENTS OF OPTION ITEM 3 IN COMPLIANCE WITH MONTANA DEQ REGULATIONS, FP-24 APPLICABLE SPECIFICATIONS, AND APPLICABLE FOREST SERVICE SUPPLEMENTAL SPECIFICATIONS (FSSS).

CONTRACTOR TO FURNISH ALL LABOR, MATERIALS, EQUIPMENT AND SUPPLIES CALLED FOR AND IMPLIED IN ACCORDANCE WITH PROJECT SPECIFICATIONS AND DRAWINGS.

9/28/18 07:07 MARKL F:_CAD STANDARDS\AGENCY STANDARDS\FOREST SERVICE\INFS-CTB.DWG;

United States Department of Agriculture
Forest Service

REGION 1
NORTHERN REGION

PROJECT NAME
ASHLEY LAKE NORTH CAMPGROUND RENOVATION
FLATHEAD NATIONAL FOREST
TALLY LAKE RANGER DISTRICT

DRAWING TITLE
SUMMARY OF QUANTITIES (2)

DATE	DESIGNER	CHECKED	DWG SHEET NO.	SHEET
05/20/2026	CL3	C. STEEN	4	4 OF 40

NO.	REVISION DESCRIPTION	BY	DATE

PROJECT NOTES

1) CONSTRUCT THE PROJECT IN COMPLIANCE WITH FEDERAL HIGHWAY ADMINISTRATION STANDARD SPECIFICATIONS FOR CONSTRUCTION OF ROAD AND BRIDGES ON FEDERAL HIGHWAY PROJECTS (FP-24) AND APPLICABLE FOREST SERVICE SUPPLEMENTAL SPECIFICATIONS (FSSS).

2) INITIAL CLEARING LIMITS AND CONSTRUCTION STAKES WILL BE SET BY THE GOVERNMENT. IT IS THE RESPONSIBILITY OF THE CONTRACTOR TO MAINTAIN AND PRESERVE ALL STAKES AND OTHER MARKS SET BY THE GOVERNMENT UNTIL AUTHORIZED TO REMOVE THEM

3) ITEMS 201 - CLEARING AND GRUBBING - DISPOSAL METHOD (f & g) WILL BE REMOVING AND PILING AT THE DESIGNATED WASTE SITE, DISPOSAL METHOD (e) WILL BE DECK TIMBER AND SCATTER BRUSH OUTSIDE OF THE CLEARING LIMITS OF THE PARKING AREA AND WALKING PATH. .

   TREES WITHIN THE CLEARING LIMITS SHALL BE CLEARED, GRUBBED, REMOVED AND DISPOSED OF AS FOLLOWS: ALL REASONABLY SOUND LOGS OVER 6 INCHES IN DIAMETER AND 8 FEET IN LENGTH SHALL BE LIMBED AND DECKED AT DESIGNATED LOCATIONS WITHIN THE CAMPGROUND AREA. ALL STUMPS, CULL LOGS AND CONSTRUCTION SLASH SHALL REMOVED FROM THE CAMPGROUND AND DISPOSED OF AT THE DESIGNATED WASTE SITE.

4) ITEM 203 - REMOVAL OF STRUCTURES AND OBSTRUCTIONS - SALVAGE ALL EXISTING FIRE RINGS AND PICNIC TABLES. FIRE RINGS IN GOOD CONDITION WILL BE MARKED BY THE GOVERNMENT FOR SALVAGE AND SHALL REMAIN THE PROPERTY OF THE GOVERNMENT AND SHALL BE STOCKPILED AT A DESIGNATED LOCATION WITHIN THE CAMPGROUND ALL ITEMS DESIGNATED FOR REMOVAL SHALL BECOME THE PROPERTY OF THE CONTRACTOR AND BE REMOVED FROM NATIONAL FOREST LAND.

5) ITEMS 204 AND 303 - UNLESS OTHERWISE SPECIFIED DISPOSE OF UNSUITABLE OR EXCESS MATERIAL ALONG ADJACENT FILL SLOPES AND GREATER THAN 100 FEET FROM ROAD STREAM CROSSINGS.

   CONSTRUCT NEW CAMPGROUND LOOP ROADS, PARKING AREA & WALKING PATHS AS STAKED. INITIAL CONSTRUCTION STAKES WILL BE SET BY THE GOVERNMENT. IT IS THE RESPONSIBILITY OF THE CONTRACTOR TO MAINTAIN AND PRESERVE ALL STAKES AND OTHER MARKS SET BY THE GOVERNMENT UNTIL AUTHORIZED TO REMOVE THEM.

6) ITEM 302 - AGGREGATE - QUANTITIES INDICATED IN THE SUMMARY OF QUANTITIES TABLE ARE IN PLACE/COMPACTED CUBIC YARDS. COMPACTION METHOD B REQUIRES OPERATION OF ROLLER COMPACTION EQUIPMENT. RECOMMEND USE OF TRENCH ROLLER FOR WALKING PATHS.

   SUBMIT GRADATION SIEVE ANALYSIS FOR APPROVAL FOR BOTH 3/4" CRUSHED AGGREGATE AND 1/2" CRUSHED SURFACE COURSE PRIOR TO USE.

7) ITEMS 622 - RENTAL EQUIPMENT - RENTAL WORK MAY INCLUDE EXCAVATION AND HAULING OF MATERIAL AS A RESULT OF PARKING LOT, TRAIL, AND WALKING PATH CONSTRUCTION; SITE REHAB WORK, TREE AND STUMP REMOVAL OUTSIDE OF STAKED CONSTRUCTION LIMITS, PATH CONSTRUCTION / RECONSTRUCTION AND OTHER SIMILAR WORK.

8) ITEMS 625 - TURF ESTABLISHMENT - WITH THE EXCEPTION OF AREAS RECEIVING AGGREGATE SURFACING, APPLY SEED, FERTILIZER AND MULCH AT THE RATES SPECIFIED IN FSSS 625 TO ALL DISTURBED AREAS WITHIN THE DAY USE AREA.

9) ITEM 63360 - ACCESS SIGN INSTALLATION - SIGNS ARE GOVERNMENT FURNISHED, CONTRACTOR RESPONSIBLE FOR SQUARE STEEL TUBE, CONCRETE, POSTS AND HARDWARE. SIGN POSTS WITHIN THE CAMPGROUND SHALL BE 4" DIAMETER TREATED ROUND. ALL APPROACH SIGNS AND GUIDE SIGNS SHALL BE 4" TREATED SQUARE. WORK CONSISTS OF INSTALLING NEW OR REPLACING EXISTING ACCESS SIGNS AT LOCATIONS DESIGNATED IN THE PLANS. UTILITIES MAY BE PRESENT, CONTRACTOR RESPONSIBLE FOR REQUESTING UTILITY LOCATE PRIOR TO ANY GROUND DISTURBING ACTIVITY.

10) ITEM R98006 - 4" x 24' SCHEDULE 40 PVC WATERLINE SLEEVES (3) SHALL BE LOCATED AND BURIED AT THE LOCATIONS SHOWN ON THE WATER LINE SITE PLANS FOR OPTION ITEM 3. PLACE PIPE ON 6" LAYER OF SAND OR FINE "PEA STONE" GRAVEL BEDDING. COMPACT ALL AROUND THE PIPE IN 6" LAYERS. CAP THE ENDS OF THE SLEEVE AND CLEARLY MARK WHERE THE SLEEVE IS LOCATED ON BOTH SIDES OF THE ROAD FOR FUTURE ACCESS.

9/28/18 07:07 MARKL F:_CAD STANDARDS\AGENCY STANDARDS\FOREST SERVICE\WFS-CTB.DWG;

United States Department of Agriculture
Forest Service

REGION 1
NORTHERN REGION

PROJECT NAME
ASHLEY LAKE NORTH CAMPGROUND RENOVATION
FLATHEAD NATIONAL FOREST
TALLY LAKE RANGER DISTRICT

DRAWING TITLE
PROJECT NOTES

DATE	DESIGNER	CHECKED	DWG SHEET NO.	SHEET
05/20/2026	CL3	C. STEEN	5	5 OF 40

NO.	REVISION DESCRIPTION	BY	DATE
△			
△			
△			

ASHLEY LAKE NORTH CAMPGROUND

0' 20' 40' 60' 80' 120' 160' 240'

SCALE

CONTOUR INTERVAL = 0.5 FT.

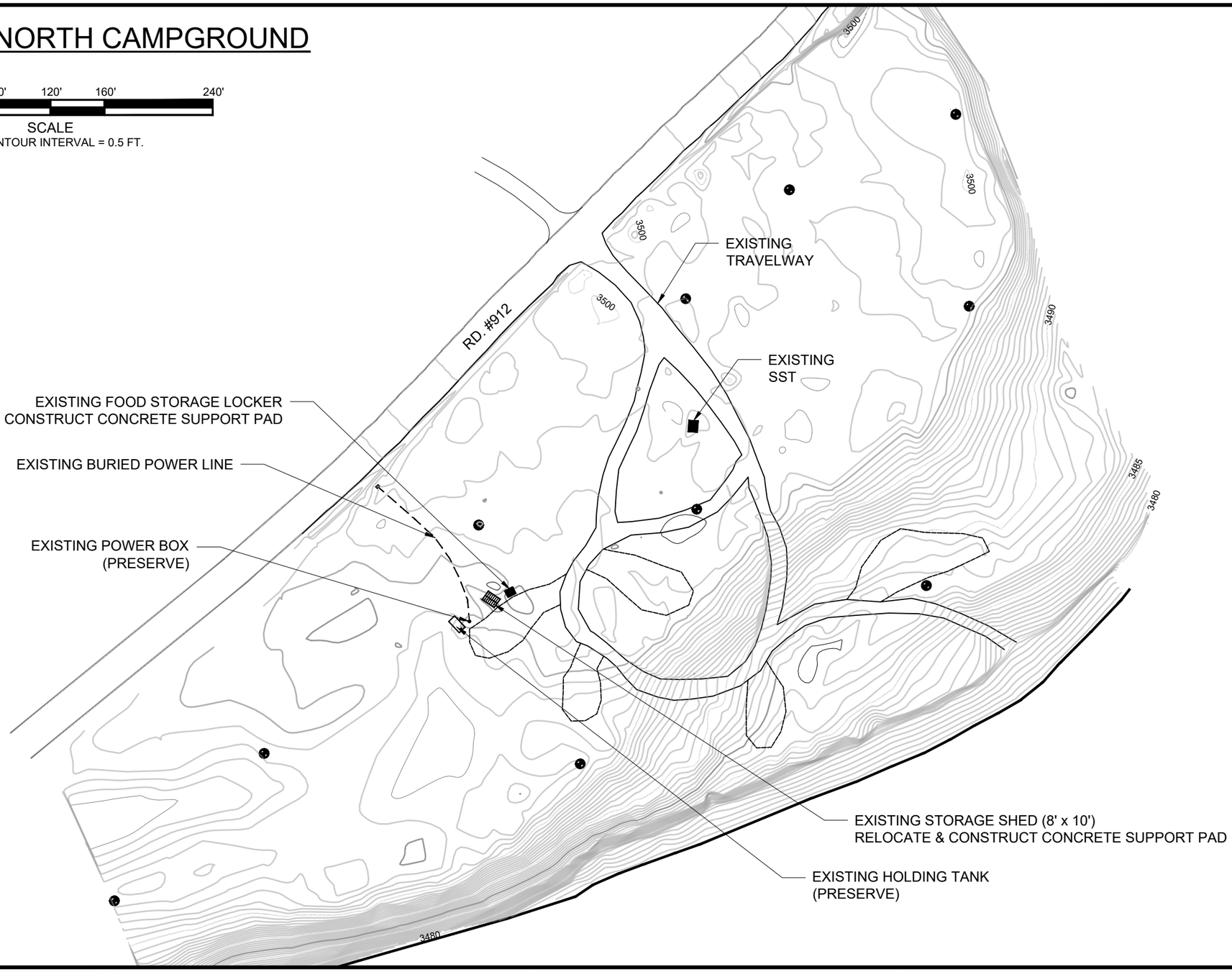

9/28/18 07:07 MARKL F:_CAD STANDARDS\AGENCY STANDARDS\FOREST SERVICE\NFS-CTB.DWG;

United States Department of Agriculture
Forest Service

REGION 1
NORTHERN REGION

PROJECT NAME
ASHLEY LAKE NORTH CAMPGROUND RENOVATION
FLATHEAD NATIONAL FOREST
TALLY LAKE RANGER DISTRICT

DRAWING TITLE
EXISTING FEATURES

DATE	DESIGNER	CHECKED	DWG SHEET NO.	SHEET
05/20/2026	CL3	C. STEEN	6	6 OF 40

NO.	REVISION DESCRIPTION	BY	DATE
1			
2			
3			

ASHLEY LAKE NORTH CAMPGROUND

0' 20' 40' 60' 80' 120' 160' 240'

SCALE
CONTOUR INTERVAL = 0.5 FT.

N

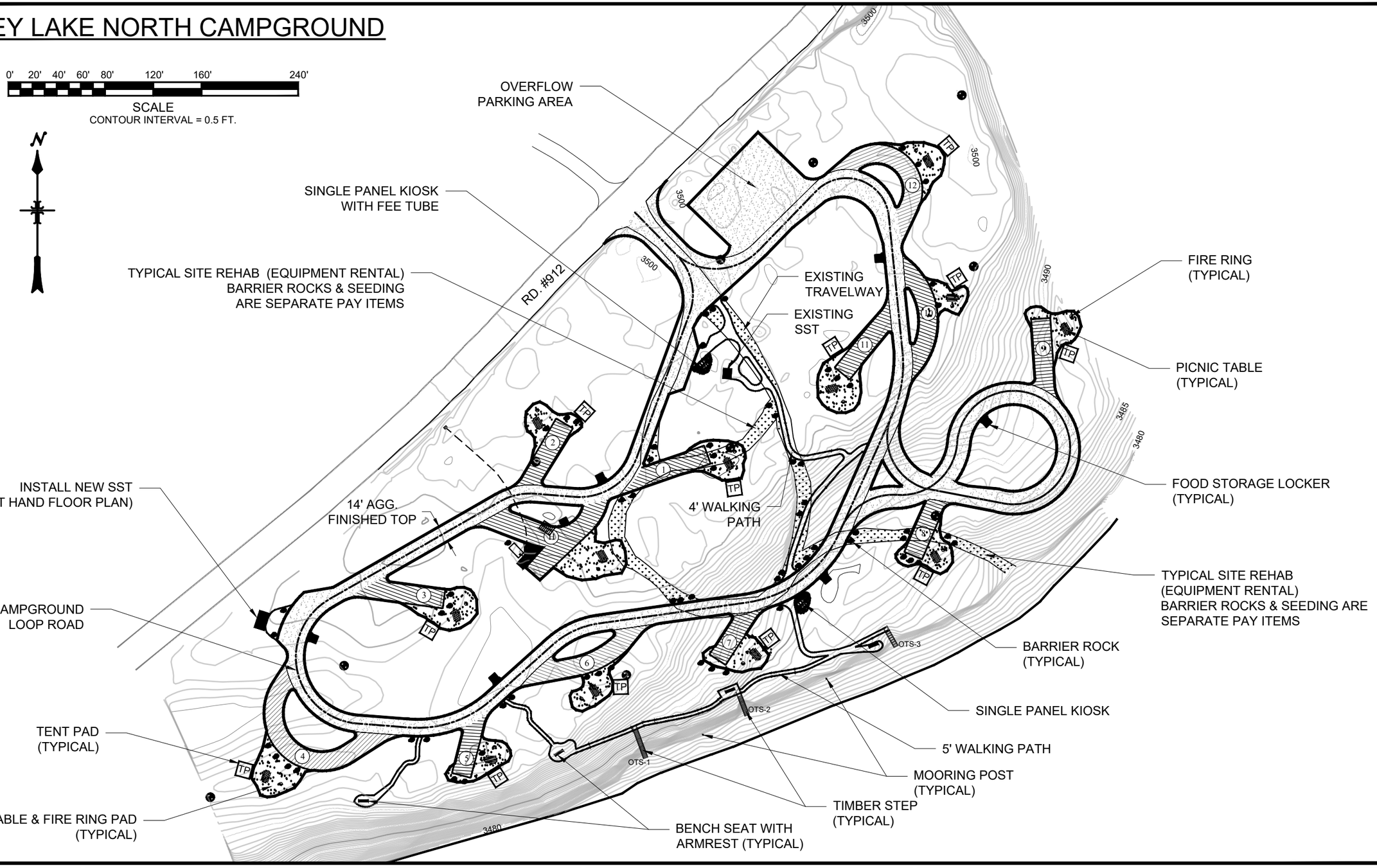

9/28/18 07:07 MARKL F:_CAD STANDARDS\AGENCY STANDARDS\FOREST SERVICE\NFS-CTB.DWG;

United States Department of Agriculture
Forest Service

REGION 1
NORTHERN REGION

PROJECT NAME
ASHLEY LAKE NORTH CAMPGROUND RENOVATION
FLATHEAD NATIONAL FOREST
TALLY LAKE RANGER DISTRICT

DRAWING TITLE
SITE PLAN

DATE	DESIGNER	CHECKED	DWG SHEET NO.	SHEET
05/20/2026	CL3	C. STEEN	8	8 OF 40

NO.	REVISION DESCRIPTION	BY	DATE
△			
△			
△			

ASHLEY LAKE NORTH CAMPGROUND

0' 20' 40' 60' 80' 120' 160' 240'

SCALE
CONTOUR INTERVAL = 0.5 FT.

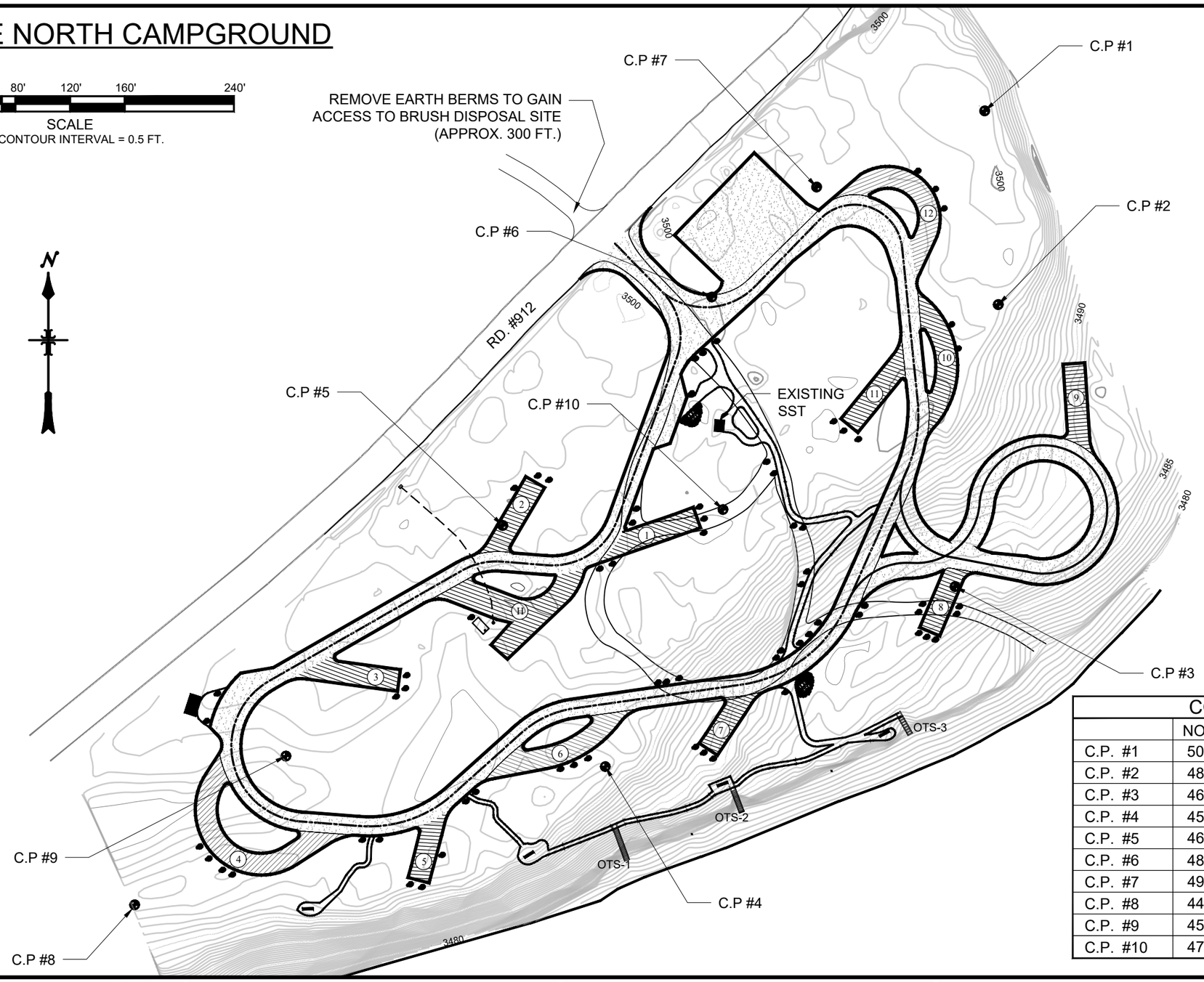

CONTROL POINTS			
	NORTHING	EASTING	ELEVATION
C.P. #1	5000.0000	10000.0000	3500.000
C.P. #2	4858.1364	10009.9201	3498.680
C.P. #3	4651.5648	9978.2456	3488.363
C.P. #4	4519.7503	9722.1776	3497.098
C.P. #5	4696.3430	9647.0585	3499.023
C.P. #6	4863.6990	9800.2200	3499.507
C.P. #7	4944.2132	9876.9192	3498.987
C.P. #8	4418.4692	9377.5312	3497.934
C.P. #9	4527.4263	9488.3091	3497.250
C.P. #10	4708.0349	9808.3894	3498.529

United States Department of Agriculture
Forest Service

REGION 1
NORTHERN REGION

PROJECT NAME
ASHLEY LAKE NORTH CAMPGROUND RENOVATION
FLATHEAD NATIONAL FOREST
TALLY LAKE RANGER DISTRICT

DRAWING TITLE
LAYOUT SHEET

DATE	DESIGNER	CHECKED	DWG SHEET NO.	SHEET
05/20/2026	CL3	C. STEEN	7	7 OF 40

NO.	REVISION DESCRIPTION	BY	DATE

9/28/18 07:07 MARKL F:_CAD STANDARDS\AGENCY STANDARDS\FOREST SERVICE\NFS-CTB.DWG;

ASHLEY LAKE NORTH CAMPGROUND

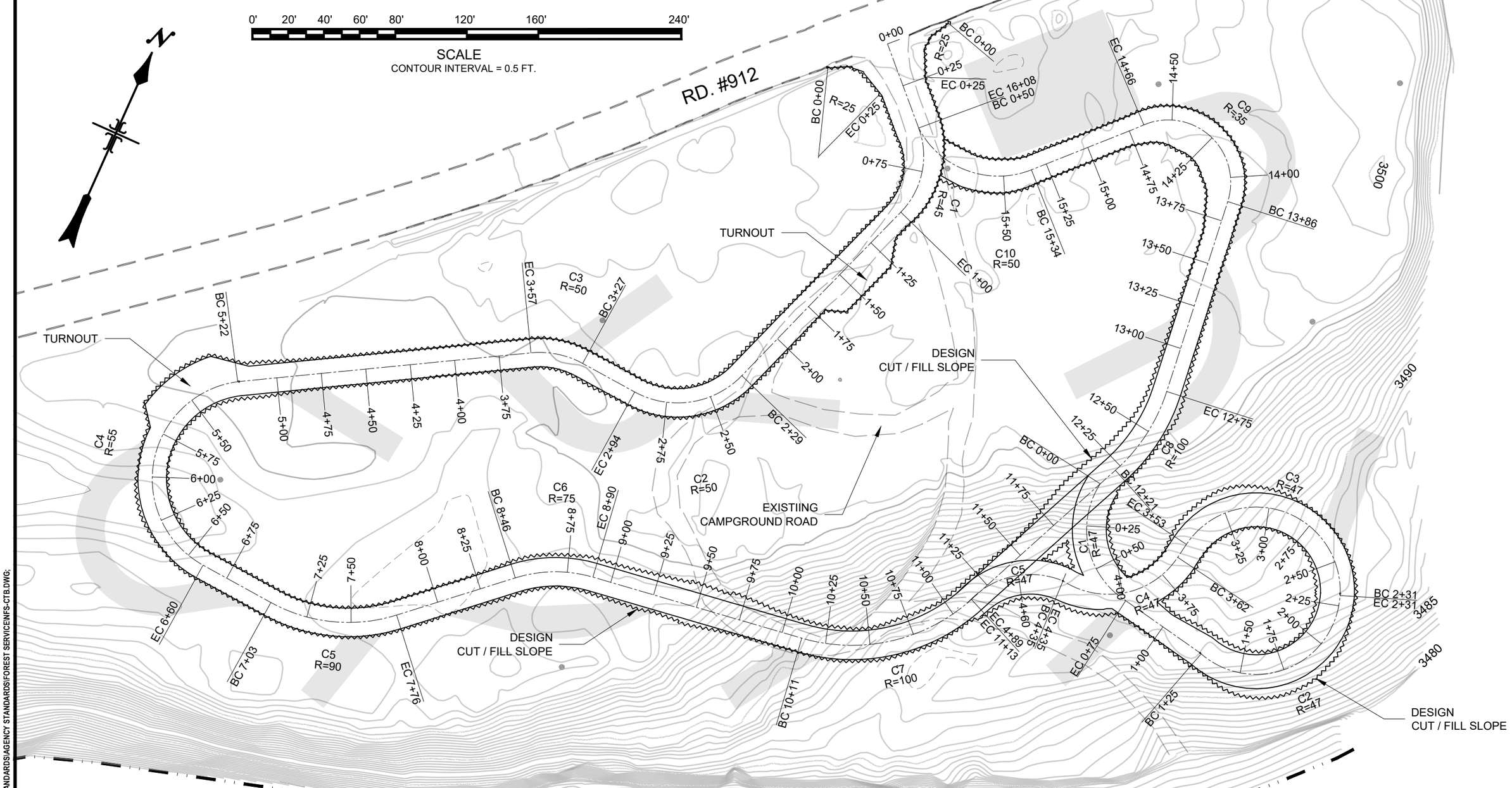

USDA United States Department of Agriculture Forest Service	REGION 1 NORTHERN REGION	PROJECT NAME ASHLEY LAKE NORTH CAMPGROUND RENOVATION FLATHEAD NATIONAL FOREST TALLY LAKE RANGER DISTRICT	DRAWING TITLE CAMPGROUND LOOP ROAD PLAN	DATE 05/20/2026	DESIGNER CL3	CHECKED C. STEEN	DWG SHEET NO. 9
				NO.	REVISION DESCRIPTION	BY	DATE
				△			
				△			
				△			

SHEET 9 OF 40

9/28/18 07:07 MARKL F:_CAD STANDARDS\AGENCY STANDARDS\FOREST SERVICE\NFS-CTB.DWG;

ASHLEY LAKE NORTH CAMPGROUND

MAIN ROAD PROFILE

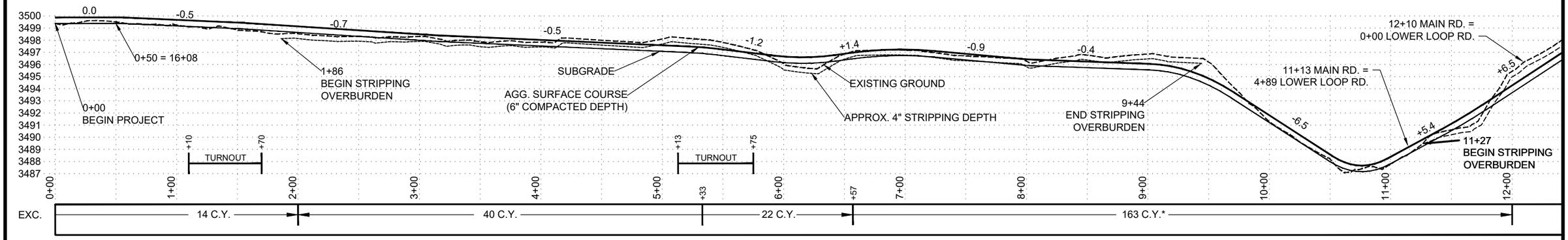

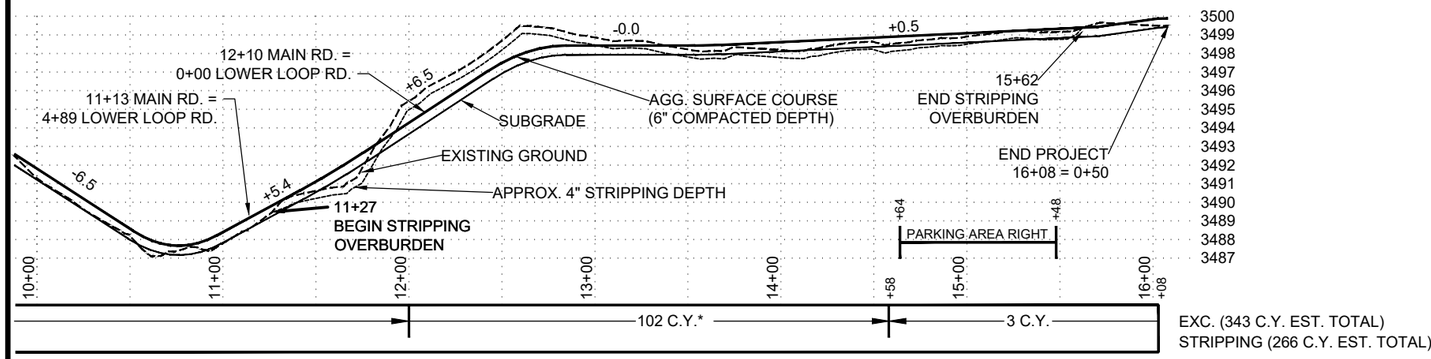

EXC. (343 C.Y. EST. TOTAL)
STRIPPING (266 C.Y. EST. TOTAL)

* APPROX 230 C.Y. EXCAVATION WILL BE USED AS BORROW FOR CAMP SPUR CONSTRUCTION
ALL GRADES SHOWN ARE FOR NEW CAMPGROUND LOOP ROAD PROFILE

LOWER LOOP ROAD PROFILE

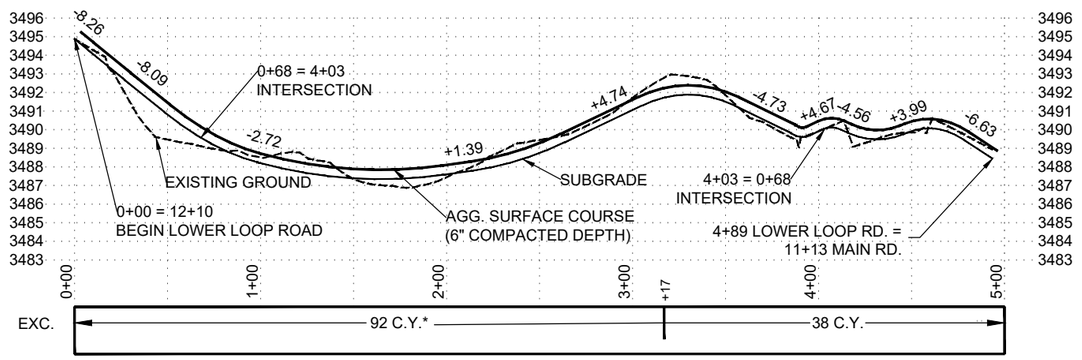

EXC. (130 C.Y. EST. TOTAL)
* APPROX 6 C.Y. EXCAVATION WILL BE USED AS BORROW FOR CAMP SPUR CONSTRUCTION

GENERAL NOTES FOR NEW CAMPGROUND LOOP ROAD CONSTRUCTION

1. SUITABLE SURPLUS EXCAVATION GENERATED FROM NEW CAMPGROUND LOOP ROAD CONSTRUCTION MAY BE USED AS EMBANKMENT MATERIAL TO CONSTRUCT OTHER SPURS WITHIN THE CAMPGROUND THAT REQUIRE BORROW. ADDITIONAL BORROW MATERIAL NEEDED TO CONSTRUCT CAMPING SPURS TO DESIGN GRADE SHALL BE OBTAINED FROM A DESIGNATED LOCATION AT THE WASTE SITE.

2. AFTER CONSTRUCTION AND FINAL SHAPING OF THE NEW CAMPGROUND LOOP ROAD, ROLLER COMPACT THE SUBGRADE PRIOR TO SURFACE AGGREGATE PLACEMENT.

9/28/18 07:07 MARKL F:\ CAD STANDARDS\AGENCY STANDARDS\FOREST SERVICE\NFS-CTB.DWG;

United States Department of Agriculture
Forest Service

REGION 1
NORTHERN REGION

PROJECT NAME
ASHLEY LAKE NORTH CAMPGROUND RENOVATION
FLATHEAD NATIONAL FOREST
TALLY LAKE RANGER DISTRICT

DRAWING TITLE
CAMPGROUND LOOP ROAD PROFILE

DATE	DESIGNER	CHECKED	DWG SHEET NO.	SHEET
05/20/2026	CL3	C. STEEN	10	10 OF 40

NO.	REVISION DESCRIPTION	BY	DATE
1			
2			
3			

ASHLEY LAKE NORTH CAMPGROUND

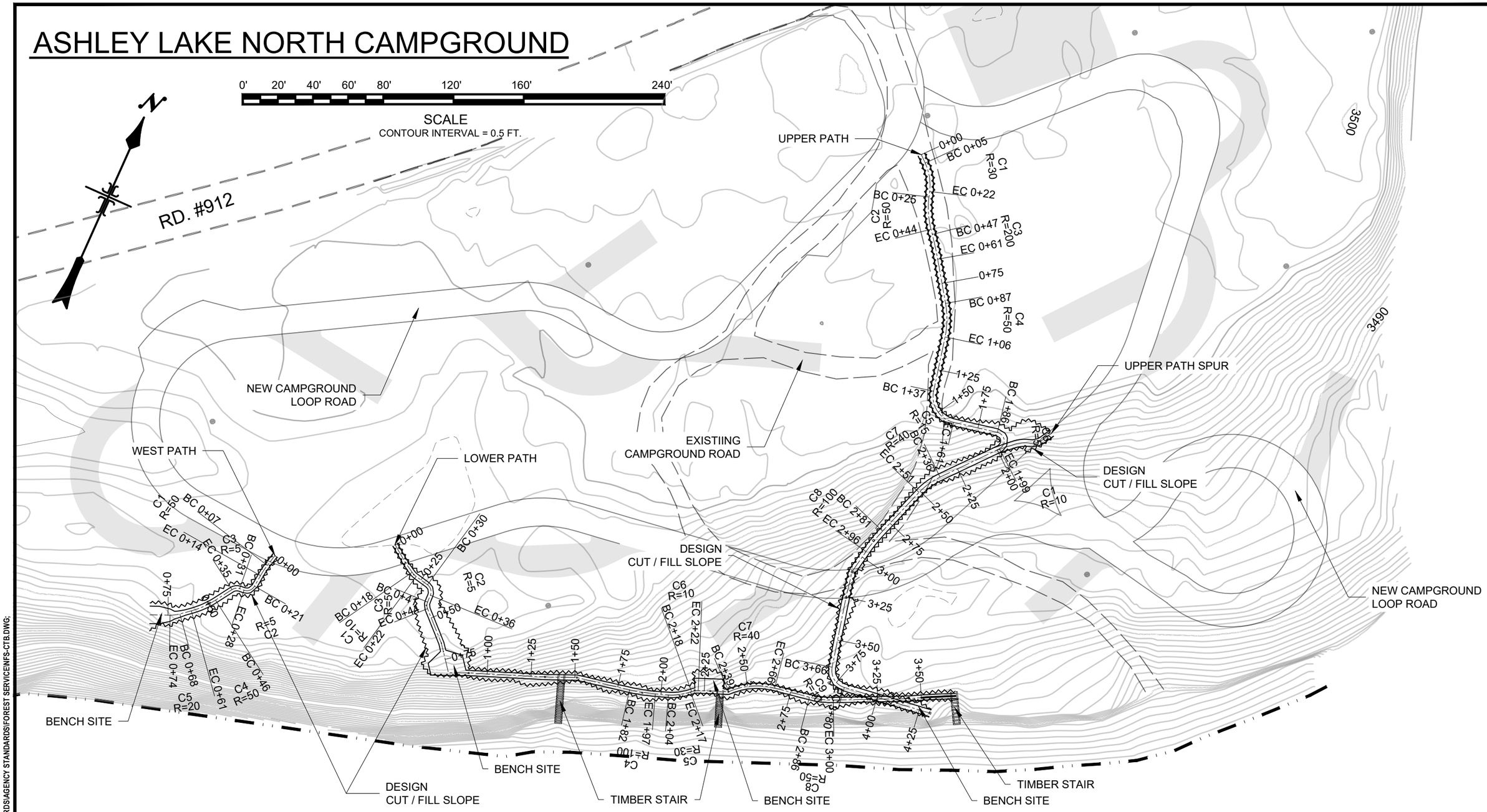

9/28/18 07:07 MARKL F:_CAD STANDARDS\AGENCY STANDARDS\FOREST SERVICE\NFS-CTB.DWG;

United States Department of Agriculture
Forest Service

REGION 1
NORTHERN REGION

PROJECT NAME
ASHLEY LAKE NORTH CAMPGROUND RENOVATION
FLATHEAD NATIONAL FOREST
TALLY LAKE RANGER DISTRICT

DRAWING TITLE
WALKING PATH PLAN

DATE	DESIGNER	CHECKED	DWG SHEET NO.	SHEET
05/20/2026	CL3	C. STEEN	11	11 OF 40

NO.	REVISION DESCRIPTION	BY	DATE
△			
△			
△			

ASHLEY LAKE NORTH CAMPGROUND

UPPER PATH PROFILE

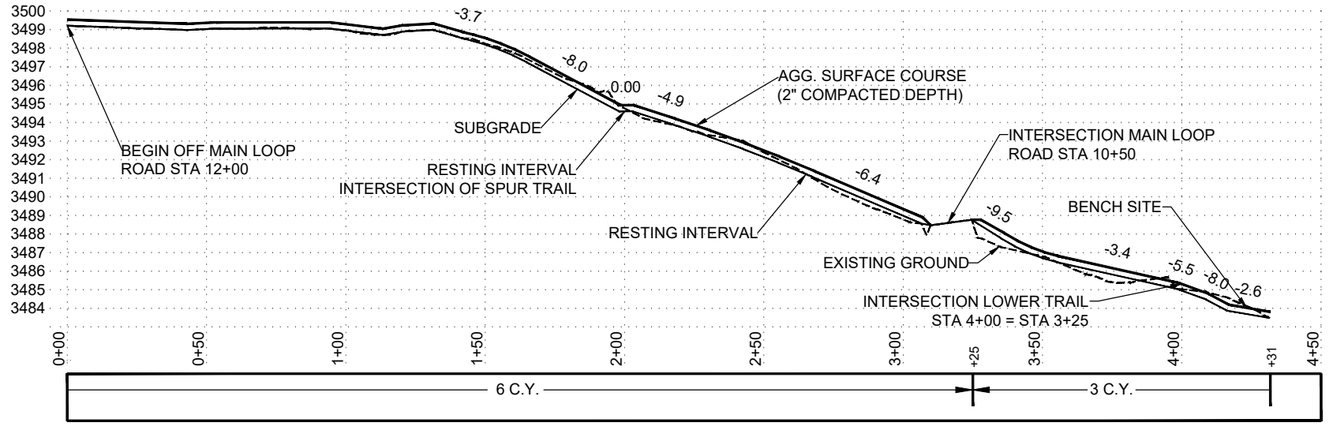

UPPER PATH SPUR PROFILE

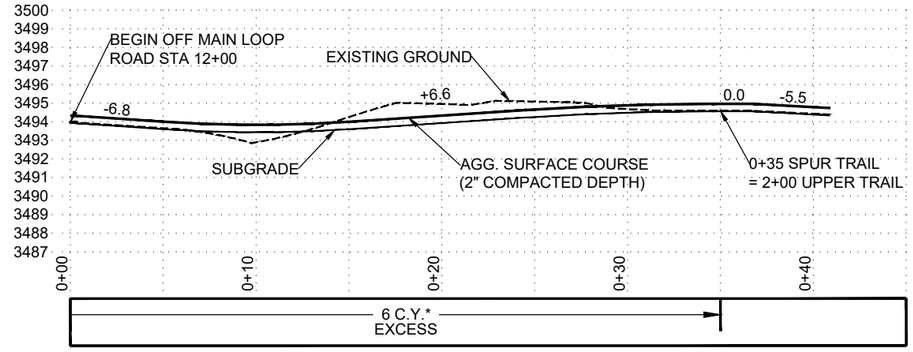

LOWER PATH PROFILE

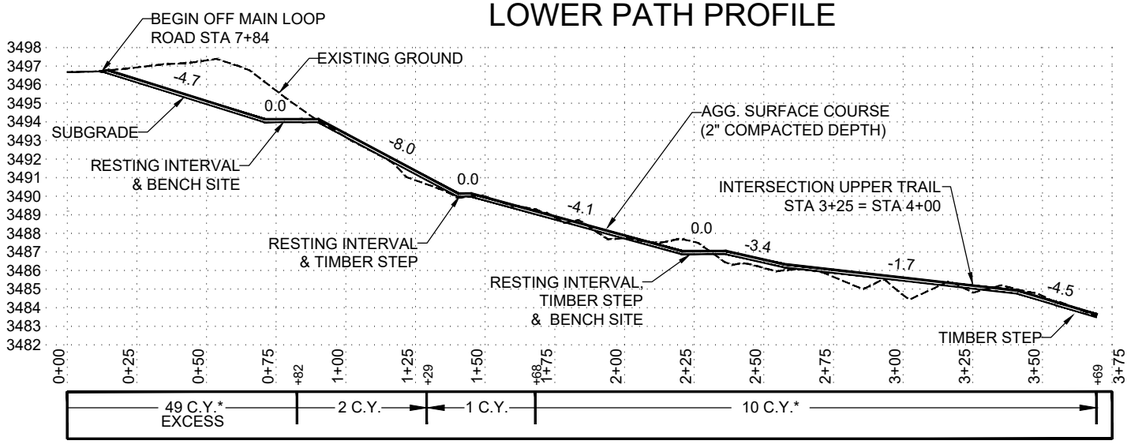

WEST PATH PROFILE

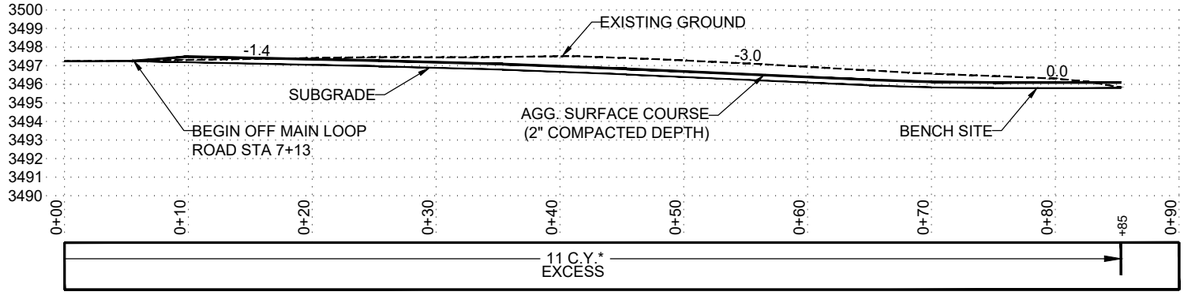

WALKING PATHS

NO SCALE

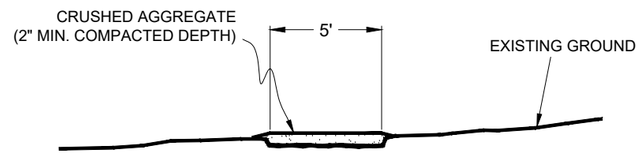

* APPROX 69 C.Y. EXCAVATION WILL BE AVAILABLE AS BORROW FOR CAMP SPUR CONSTRUCTION

GENERAL NOTES FOR NEW CAMPGROUND TRAIL CONSTRUCTION

1. STRIP BRUSH, DUFF, OVERBURDEN & OTHER ORGANIC MATERIAL DOWN TO MINERAL SOIL AND HAUL TO THE DESIGNATED WASTE SITE.

2. PLACE CRUSHED AGGREGATE TO A MINIMUM OF 2 INCHES, AS DIRECTED, TO PROVIDE SURFACE DRAINAGE (NOT TO EXCEED 3%). COMPACT USING A SMALL ROLLER OR PLATE COMPACTOR.

3. SUITABLE SURPLUS EXCAVATION GENERATED FROM NEW CAMPGROUND TRAIL CONSTRUCTION MAY BE USED AS EMBANKMENT MATERIAL TO CONSTRUCT OTHER SPURS WITHIN THE CAMPGROUND THAT REQUIRE BORROW.

9/28/18 07:07 MARKL F:_CAD STANDARDS\AGENCY STANDARDS\FOREST SERVICE\NFS-CTB.DWG;

United States Department of Agriculture
Forest Service

REGION 1
NORTHERN REGION

PROJECT NAME
ASHLEY LAKE NORTH CAMPGROUND RENOVATION
FLATHEAD NATIONAL FOREST
TALLY LAKE RANGER DISTRICT

DRAWING TITLE
WALKING PATH PROFILE

DATE	DESIGNER	CHECKED	DWG SHEET NO.	SHEET
05/20/2026	CL3	C. STEEN	12	12 OF 40

NO.	REVISION DESCRIPTION	BY	DATE

CAMPGROUND ROAD & CAMP SPUR DETAILS

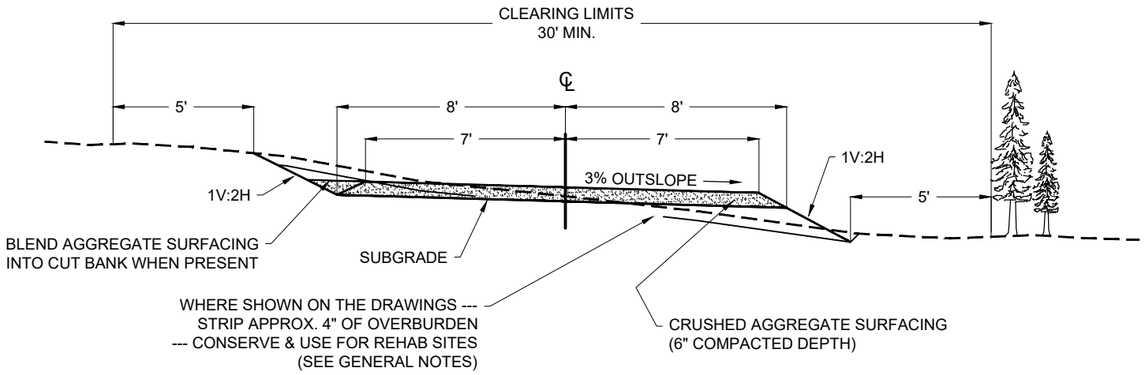

TYPICAL SINGLE LANE ROAD SECTION

STATION 0+50 - 16+08

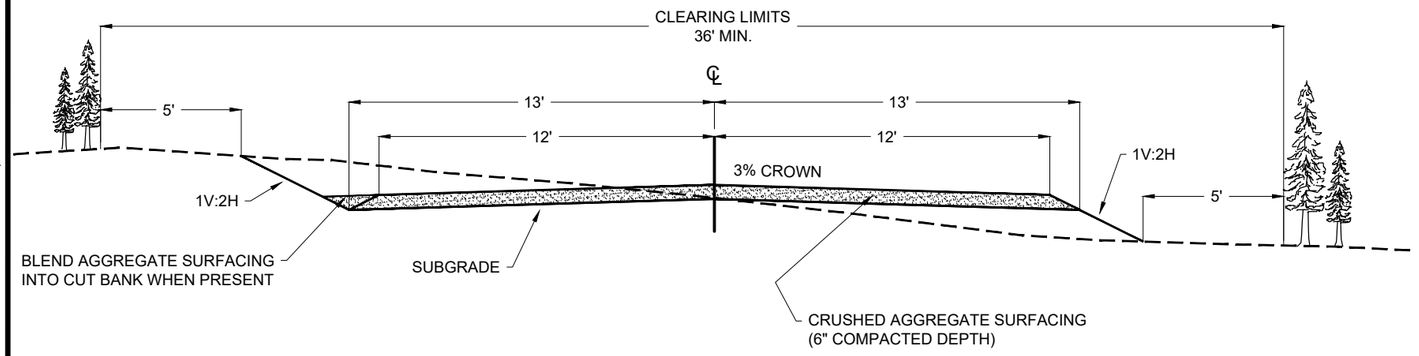

TYPICAL DOUBLE LANE ROAD SECTION

STATION 0+00 - 0+50

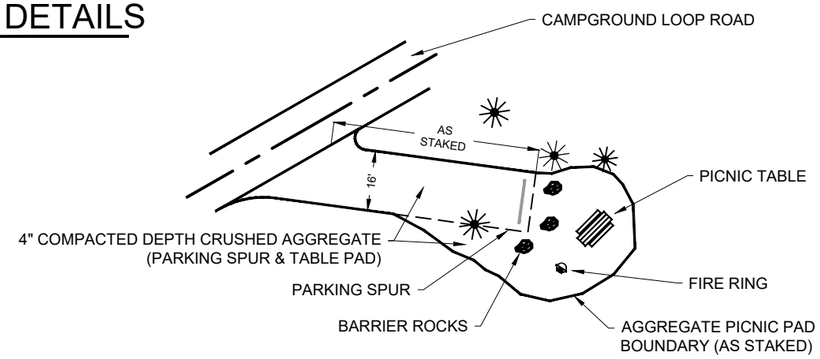

1. THE DIMENSIONS AND LOCATIONS OF CRUSHED AGGREGATE PADS ALONG WITH PICNIC TABLE & FIRE RING LOCATIONS ARE APPROXIMATE. EXACT SIZE, SHAPE, LOCATION, AND ORIENTATION OF PADS, TABLES, AND RINGS SHALL BE STAKED IN THE FIELD BY THE ENGINEER.
PARKING SPUR & PICNIC TABLE PADS SHALL BE SLOPED TO DRAIN AS DIRECTED --
(4" COMPACTED DEPTH CRUSHED AGGREGATE).

AN ADDITIONAL QUANTITY OF CRUSHED AGGREGATE MAY BE REQUIRED FOR SHAPING AND LEVELING OF THE PICNIC TABLE AND FIRE RING PADS, AS DIRECTED BY THE ENGINEER.

2. THE STAKED PAD AREAS SHALL BE CLEARED, GRUBBED, SMOOTHED AND COMPACTED PRIOR TO CRUSHED AGGREGATE PLACEMENT.

3. ALL CONSTRUCTED FILL SLOPES SHALL BE 1V:4H OR FLATTER AS DIRECTED BY THE ENGINEER.

4. CRUSHED AGGREGATE USED IN PAD CONSTRUCTION WILL BE PAID FOR UNDER ITEM 30201.

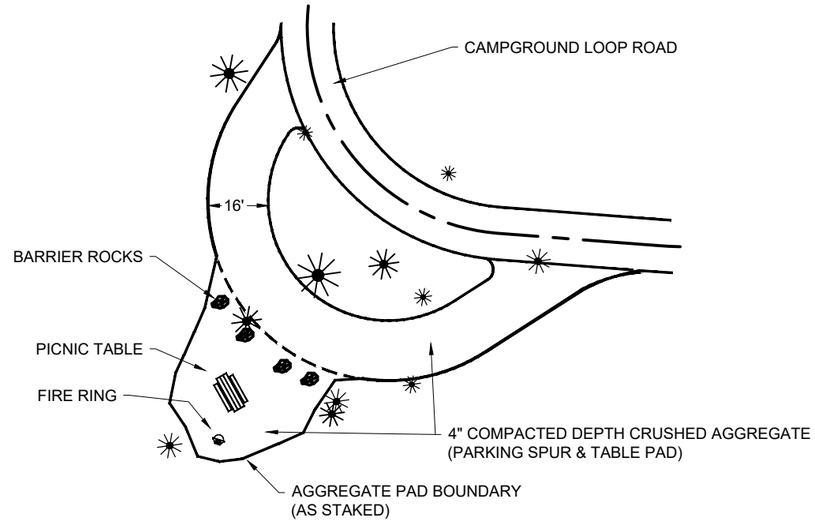

CAMP SPUR & PULL THRU DETAILS

9/28/18 07:07 MARKL F:_CAD STANDARDS\AGENCY STANDARDS\FOREST SERVICE\NFS-CTB.DWG;

United States Department of Agriculture
Forest Service

REGION 1
NORTHERN REGION

PROJECT NAME
ASHLEY LAKE NORTH CAMPGROUND RENOVATION
FLATHEAD NATIONAL FOREST
TALLY LAKE RANGER DISTRICT

DRAWING TITLE
ROAD TYPICALS & CAMP SPUR DETAILS

DATE	DESIGNER	CHECKED	DWG SHEET NO.	SHEET
05/20/2026	CL3	C. STEEN	13	13 OF 40

NO.	REVISION DESCRIPTION	BY	DATE
1			
2			
3			

ASHLEY LAKE NORTH CAMPGROUND

CAMPING SPUR PROFILES

NO SCALE

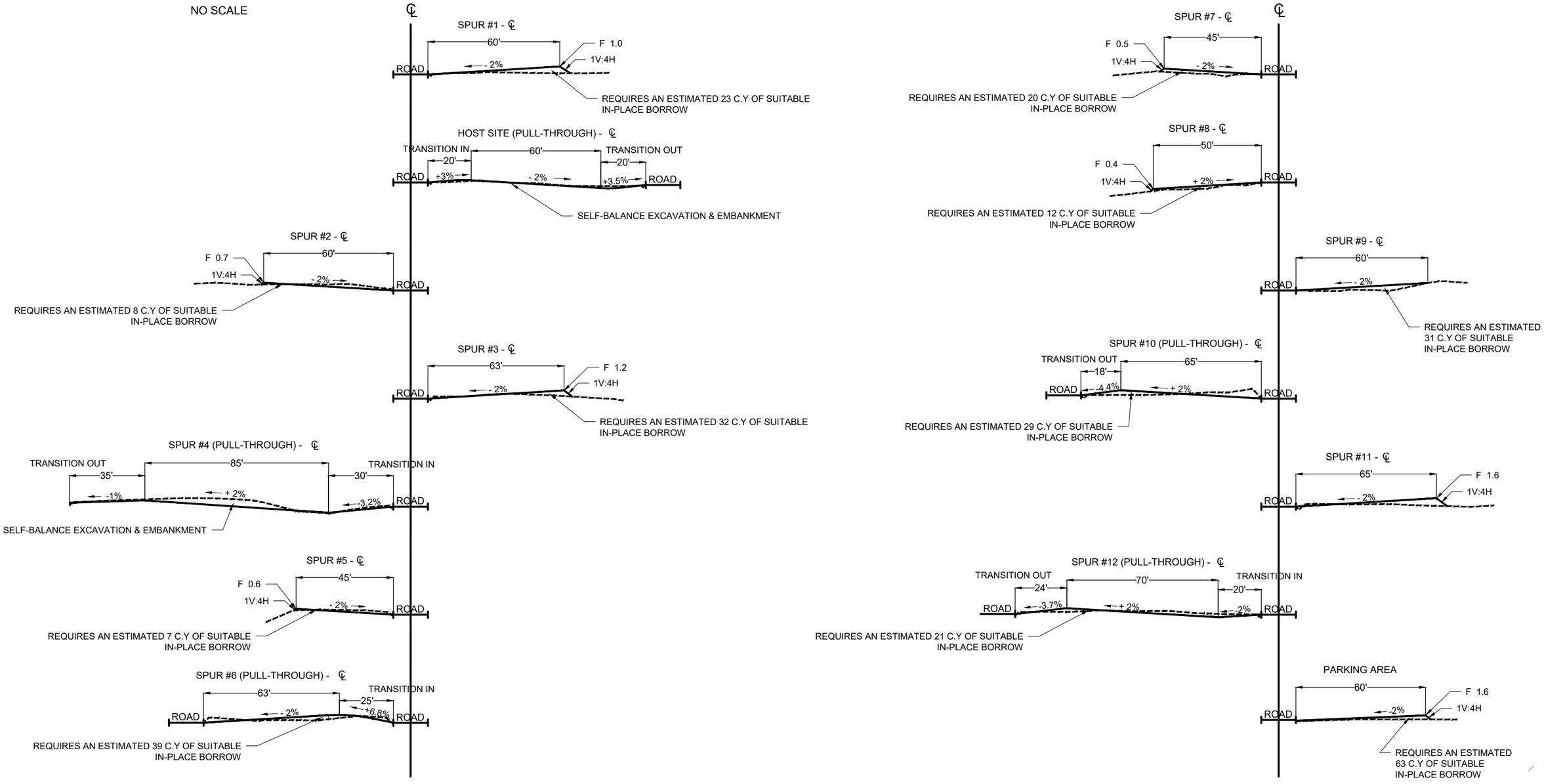

9/28/18 07:07 MARKL FI_CAD STANDARDS\AGENCY STANDARDS\FOREST SERVICE\NFS-CTB.DWG;

United States Department of Agriculture
Forest Service

REGION 1
NORTHERN REGION

PROJECT NAME
ASHLEY LAKE NORTH CAMPGROUND RENOVATION
FLATHEAD NATIONAL FOREST
TALLY LAKE RANGER DISTRICT

DRAWING TITLE
CAMP SPUR PROFILES

DATE	DESIGNER	CHECKED	DWG SHEET NO.	SHEET
05/20/2026	CL3	C. STEEN	14	14 OF 40

NO.	REVISION DESCRIPTION	BY	DATE

ASHLEY LAKE NORTH CAMPGROUND

CRUSHED AGGREGATE QUANTITIES		
	Cu. Yd. (In-Place)	Cu. Yd. (Loose)
MAIN CAMPGROUND LOOP ROAD	573	716
LOWER LOOP ROAD	176	220
OVERFLOW PARKING AREA	72	90
TURNOUT #1	10	12
TURNOUT #2	17	20
HOST SITE	28	35
SPUR #1	16	20
SPUR #2	14	18
SPUR #3	16	20
SPUR #4	34	42
SPUR #5	12	15
SPUR #6	23	29
SPUR #7	12	15
SPUR #8	12	15
SPUR #9	14	18
SPUR #10	21	26
SPUR #11	15	19
SPUR #12	28	35
	1093 Cu. Yds. (In-Place) =	1365 Cu. Yds. (Loose)

ITEM 30201-1000 -- 3/4" CRUSHED AGGREGATE SURFACE COURSE
(ROADS, SPURS, & PARKING AREAS)
1093 Cu. Yds. (In-Place) --- CONTRACT QUANTITY

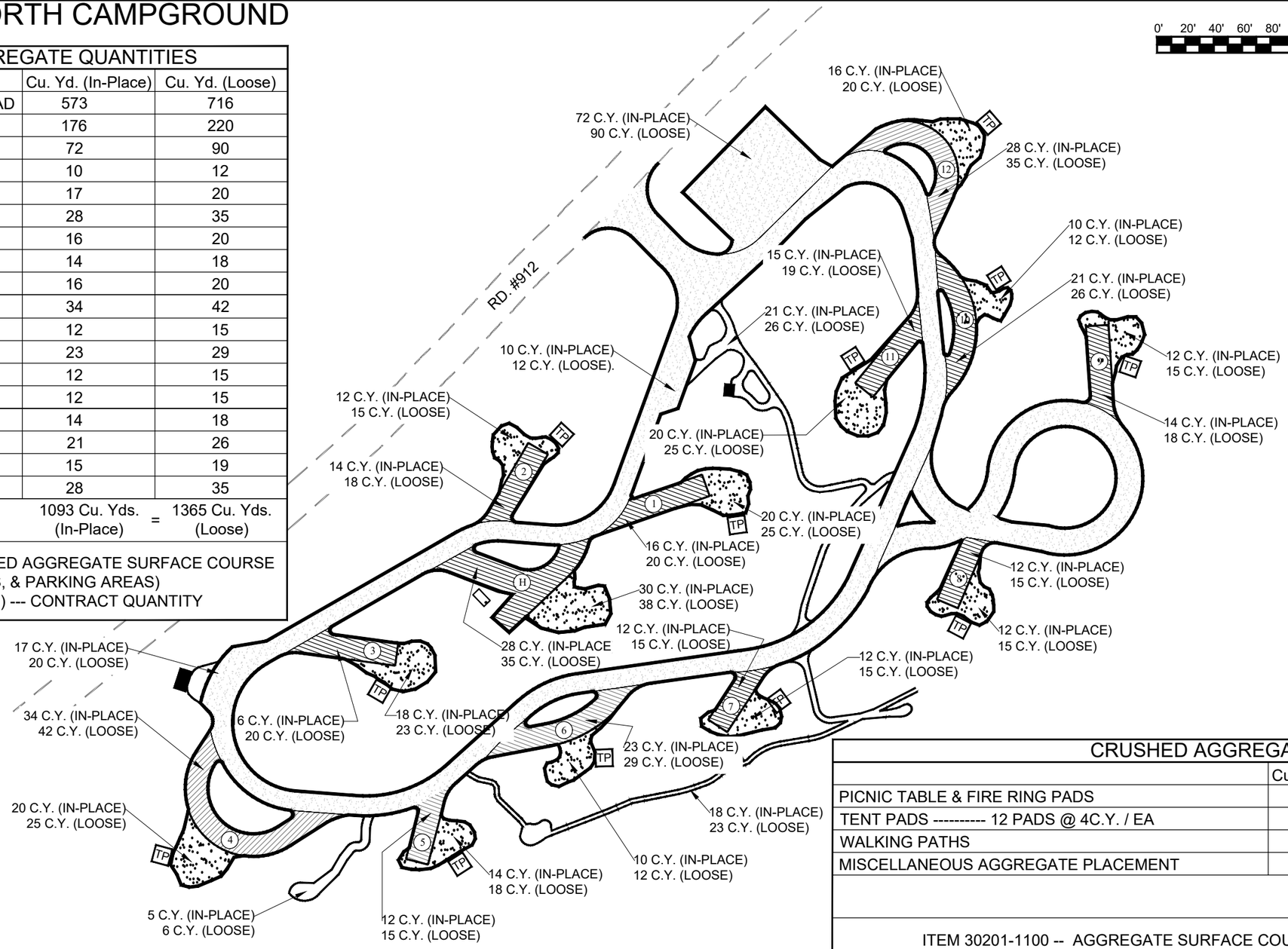

CRUSHED AGGREGATE QUANTITIES		
	Cu. Yd. (In-Place)	Cu. Yd. (Loose)
PICNIC TABLE & FIRE RING PADS	206	258
TENT PADS ---------- 12 PADS @ 4C.Y. / EA	48	60
WALKING PATHS	65	81
MISCELLANEOUS AGGREGATE PLACEMENT	131	164
	450 Cu. Yds. (In-Place) =	563 Cu. Yds. (Loose)

ITEM 30201-1100 -- AGGREGATE SURFACE COURSE, 1/2" CRUSHED
(WALKING PATHS, TABLE, TENT, & MISCELLANEOUS PADS)
346 Cu. Yds. (In-Place) --- CONTRACT QUANTITY

9/28/18 07:07 MARKL F:_CAD STANDARDS\AGENCY STANDARDS\FOREST SERVICE\NFS-CTB.DWG;

United States Department of Agriculture
Forest Service

REGION 1
NORTHERN REGION

PROJECT NAME
ASHLEY LAKE NORTH CAMPGROUND RENOVATION
FLATHEAD NATIONAL FOREST
TALLY LAKE RANGER DISTRICT

DRAWING TITLE
CRUSHED AGGREGATE QUANTITIES

DATE	DESIGNER	CHECKED	DWG SHEET NO.	SHEET
05/20/2026	CL3	C. STEEN	15	15 OF 40

NO.	REVISION DESCRIPTION	BY	DATE
1			
2			
3			

FIRE RING, WHEEL STOP, AND AGGREGATE PAD DETAILS

STEEL FIRE RING
TYPICAL INSTALLATION DETAIL

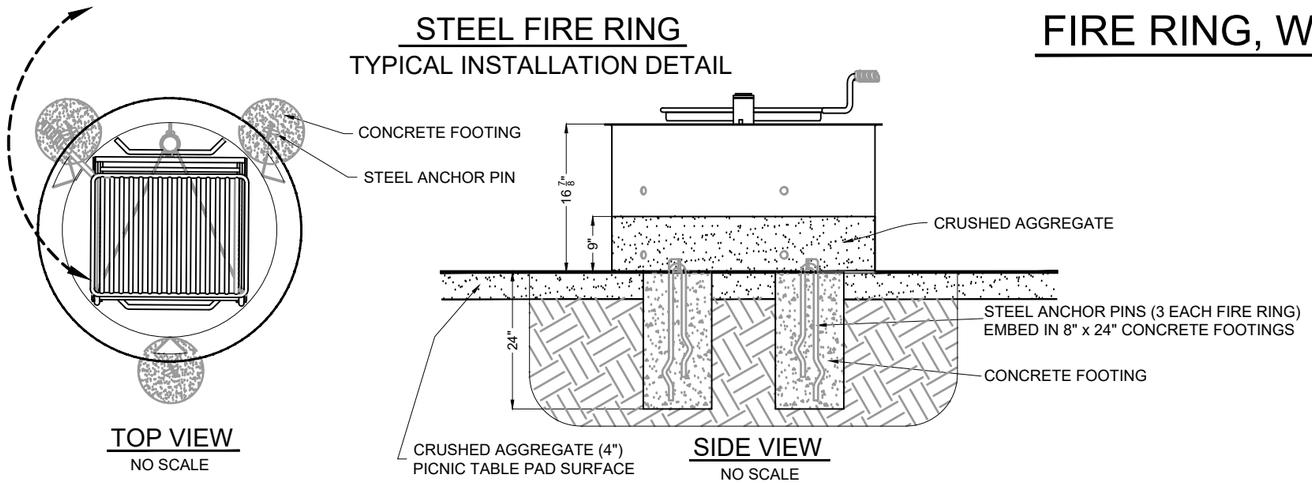

TOP VIEW
NO SCALE

SIDE VIEW
NO SCALE

1. FIRE RINGS SHALL BE EQUAL TO OR BETTER THAN PILOT ROCK FSW-SL30/18/PA ACCESSIBLE SWIVEL GRATE FIRE RING WITH PIN ANCHORS. (AVAILABLE FROM RJ THOMAS MFG. CO., INC. CHEROKEE, IA 51012-0946; PHONE: 712-225-5115 or 800-762-5002) .

2. AFTER CONSTRUCTION OF THE CRUSHED AGGREGATE PAD SURFACE, THE FIRE RINGS SHALL BE INSTALLED AS SHOWN. PREPACKAGED CONCRETE MIX IS ACCEPTABLE.

3. THE EXACT LOCATIONS AND ORIENTATION OF THE FIRE RINGS SHALL BE STAKED IN THE FIELD BY THE ENGINEER.

4. AFTER ANCHORING, THE FIRE RINGS SHALL BE FILLED CRUSHED AGGREGATE TO MINIMUM 9" ABOVE SURROUNDING FINISH GRADE.

CONCRETE WHEEL STOPS

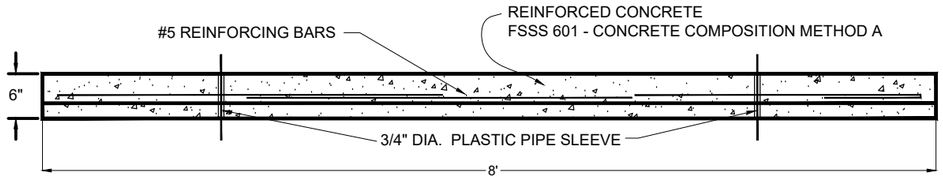

SIDE VIEW
NO SCALE

PIN EACH WHEEL STOP TO THE GROUND WITH TWO 5/8" DIA. x 18" BARS. DRIVE BARS FLUSH WITH TOP OF CONCRETE (LOCATIONS WILL BE DESIGNATED BY THE ENGINEER).

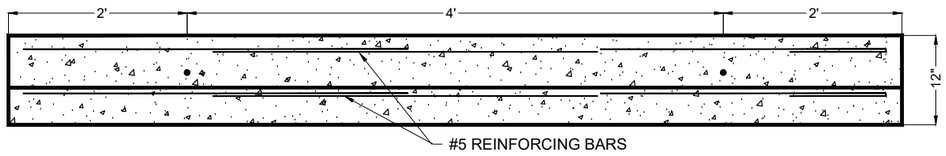

PLAN VIEW
NO SCALE

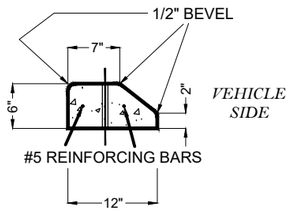

END VIEW
NO SCALE

MINOR VARIATION IN DESIGN AND DIMENSIONS WILL BE PERMITTED TO ALLOW THE USE OF WHEEL STOPS THAT MEET MANUFACTURER'S STANDARDS SUBJECT TO APPROVAL BY THE ENGINEER.

TYPICAL PICNIC TABLE & FIRE RING PAD DETAILS
NO SCALE

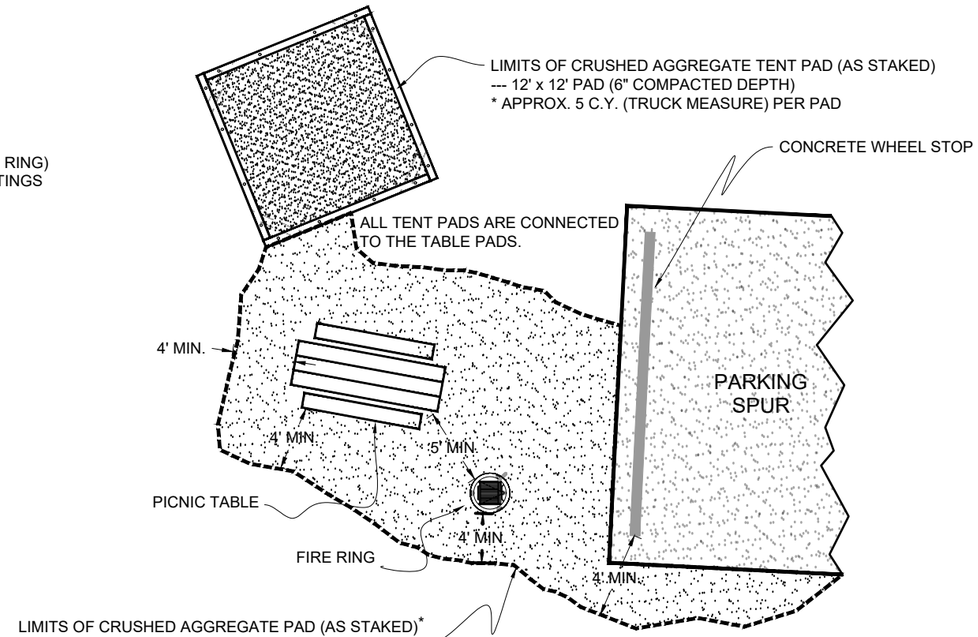

* NOTE: AN ADDITIONAL QUANTITY OF CRUSHED AGGREGATE MAY BE REQUIRED FOR SHAPING AND LEVELING OF THE PICNIC TABLE AND FIRE RING PADS, AS DIRECTED BY THE ENGINEER. (SEE NOTE #4 BELOW).

GENERAL NOTES FOR PICNIC TABLE & FIRE RING PADS

1. THE DIMENSIONS AND LOCATIONS OF TABLE & TENT PADS, FIRE RINGS, AND PICNIC TABLES SHOWN ABOVE ARE APPROXIMATE. EXACT SIZE, SHAPE, LOCATION, AND ORIENTATION OF PADS, TABLES, AND RINGS SHALL BE STAKED IN THE FIELD BY THE ENGINEER.

2. THE STAKED PAD AREAS SHALL BE CLEARED, GRUBBED, SMOOTHED AND COMPACTED PRIOR TO CRUSHED AGGREGATE PLACEMENT.

3. FINISH SLOPE OF PADS TO BE 3% MAXIMUM IN ANY DIRECTION.

4. ALL CONSTRUCTED FILL SLOPES SHALL BE 1V:4H OR FLATTER AS DIRECTED BY THE ENGINEER.

5. CRUSHED AGGREGATE USED IN PAD CONSTRUCTION WILL BE PAID FOR UNDER ITEM 30201.

9/28/18 07:07 MARKL F:_CAD STANDARDS\AGENCY STANDARDS\FOREST SERVICE\NFS-CTB.DWG;

United States Department of Agriculture
Forest Service

REGION 1
NORTHERN REGION

PROJECT NAME
ASHLEY LAKE NORTH CAMPGROUND RENOVATION
FLATHEAD NATIONAL FOREST
TALLY LAKE RANGER DISTRICT

DRAWING TITLE
FIRE RING, WHEELSTOP & SITE PAD DETAILS

DATE	DESIGNER	CHECKED	DWG SHEET NO.	SHEET
05/20/2026	CL3	C. STEEN	16	16 OF 40

NO.	REVISION DESCRIPTION	BY	DATE
1			
2			
3			

PICNIC TABLE

ALL MATERIALS REQUIRED FOR PICNIC TABLE FABRICATION SHALL BE FURNISHED BY THE CONTRACTOR.

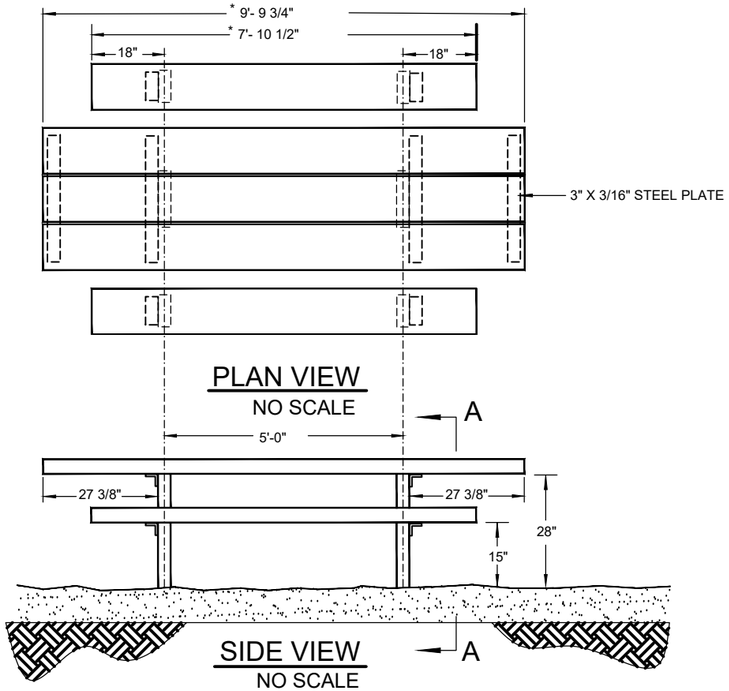

PLAN VIEW
NO SCALE

SIDE VIEW
NO SCALE

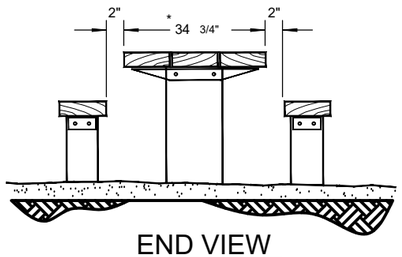

END VIEW
NO SCALE

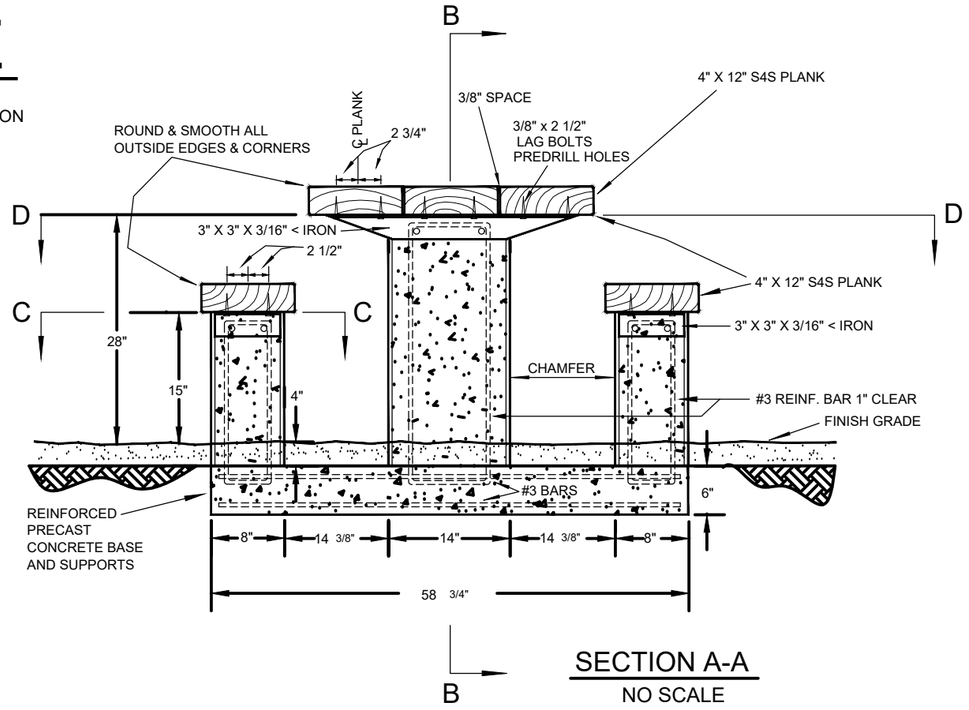

SECTION A-A
NO SCALE

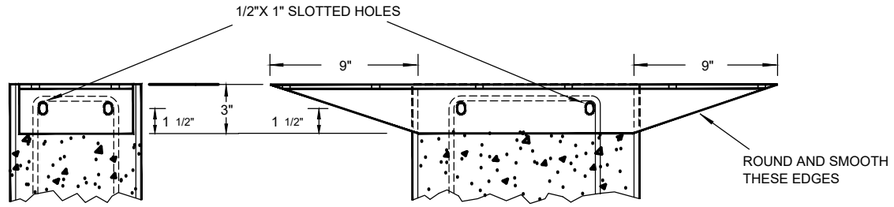

< IRON SIDE VIEW

< IRON SIDE VIEW

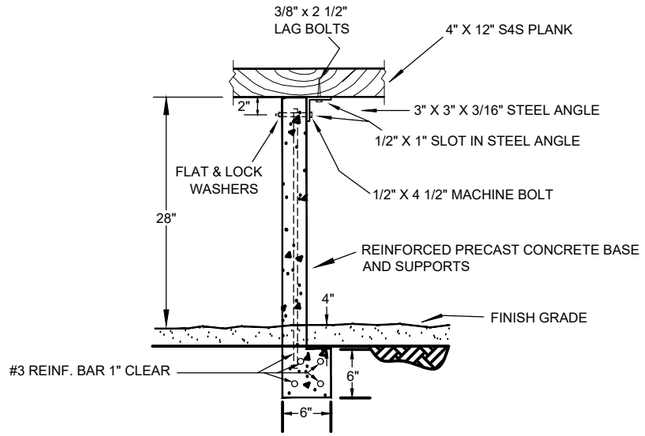

SECTION B-B
NO SCALE

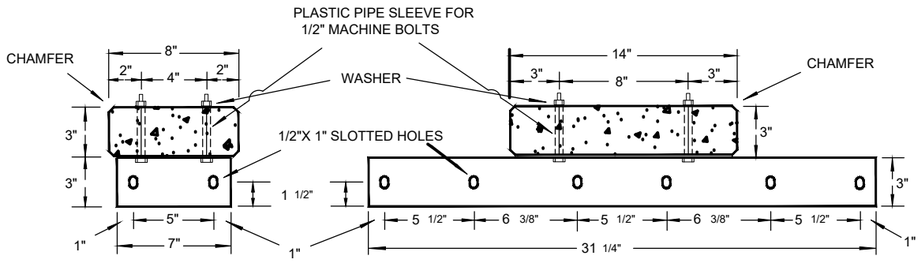

SECTION C-C
NO SCALE

SECTION D-D
NO SCALE

NOTE: 4" X 12" S4S PLANKS SHALL BE DOUGLAS-FIR OR LARCH OF NO. 1 GRADE ACCORDING TO WESTERN WOOD PRODUCTS ASSOCIATION GRADING RULES. AFTER BEING CUT TO SIZE AND PRIOR TO ATTACHMENT, TWO COATS OF EXTERIOR WOOD STAIN, SUPERDECK EXTERIOR (SHERWIN WILLIAMS) OR EQUAL, SHALL BE APPLIED TO ALL SURFACES OF THE WOODEN TOP AND BENCH PLANKS. COLOR OF THE STAIN SHALL BE FED-STD-595C #20059 (FOREST SERVICE BROWN) OR SIMILAR (COLOR TO BE AGREED UPON BY FOREST SERVICE).
APPLICATION RATE AND TIME BETWEEN COATS SHALL BE AS SPECIFIED BY THE STAIN MANUFACTURER.

ALL STEEL BRACKETS AND PLATES SHALL BE PRIMED AND POWDER COATED BLACK.

9/28/18 07:07 MARKL F:_CAD STANDARDS\AGENCY STANDARDS\FOREST SERVICE\NFS-CTB.DWG;

United States Department of Agriculture
Forest Service

REGION 1
NORTHERN REGION

PROJECT NAME
ASHLEY LAKE NORTH CAMPGROUND RENOVATION
FLATHEAD NATIONAL FOREST
TALLY LAKE RANGER DISTRICT

DRAWING TITLE
PICNIC TABLE

DATE	DESIGNER	CHECKED	DWG SHEET NO.	SHEET
05/20/2026	CL3	C. STEEN	17	17 OF 40

NO.	REVISION DESCRIPTION	BY	DATE

STORAGE SHED INSTALLATION AND TENT PAD DETAILS

STORAGE SHED INSTALLATION (8' x 10')

CONCRETE PAD DETAILS
No Scale

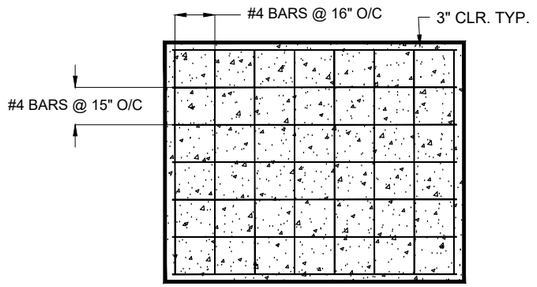

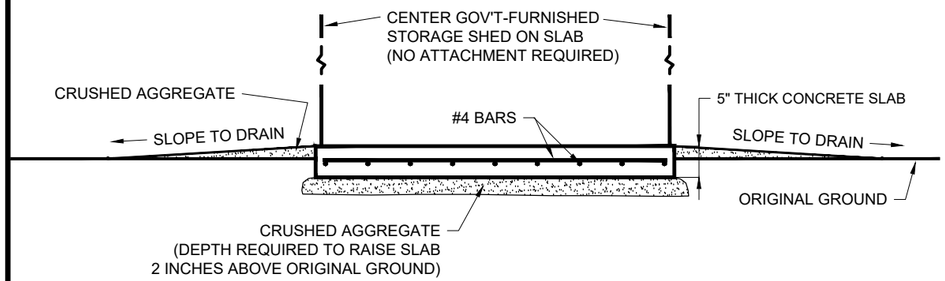

GENERAL NOTES FOR STORAGE SHED

1. THE 8' x 10' STORAGE SHED WILL BE GOVERNMENT-FURNISHED. THE CONCRETE PAD SHALL BE CONTRACTOR-FURNISHED.

2. THE CONCRETE SLAB MAY BE CAST-IN-PLACE OR PRECAST.
FSSS 601.

3. PRIOR TO CASTING THE 5" THICK CONCRETE PAD, VERIFY DIMENSIONS OF THE STORAGE SHED. IF IT IS DETERMINED THAT RUN-OFF FROM THE SHED ROOF WILL Ssplash ON THE CONCRETE PAD, CONSTRUCT A SLIGHTLY SMALLER PAD AS DIRECTED.

4. THE EXACT LOCATION, ORIENTATION AND ELEVATION OF THE STORAGE SHED CONCRETE PAD WILL BE STAKED IN THE FIELD BY THE ENGINEER.

TENT PAD

TYPICAL INSTALLATION DETAILS
No Scale

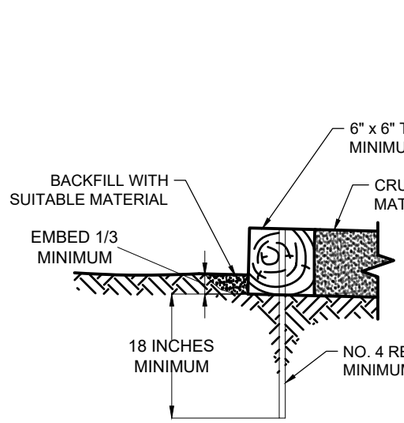

TYPICAL TENT PAD TIMBER

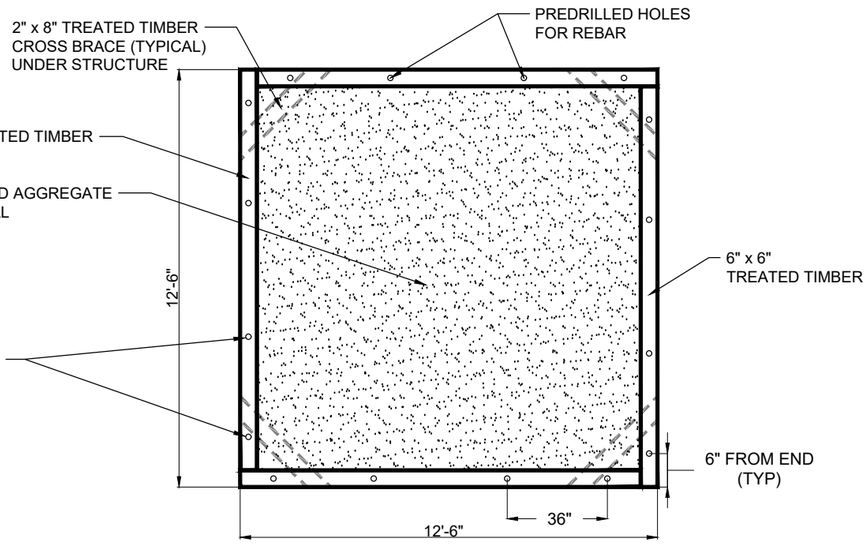

TYPICAL ID	MATERIAL	SIZE	SPECIES/ GRADE	PRESERV. TYPE	
TP	SAWN TIMBER	6" x 6"	DOUGLAS FIR	UC4B	GROUND CONTACT / HEAVY DUTY
PRESERVATIVE TREATMENT - (REFER TO AWPA USE CATEGORY SYSTEM) WATERBORNE TREATMENT					

GENERAL NOTES FOR TENT PAD

1. PRE-DRILL HOLES FOR REBAR AND SCREWS TO PREVENT SPLITTING OF SAWN TIMBERS..

2. ALL FIELD DRILLED HOLES AND CUTS SHALL BE FIELD TREATED

3. PLACE REBAR 6 INCHES FROM EACH END OF TIMBER WITH MAXIMUM SPACING OF 36 INCHES.

4. RECESS END OF REBAR $\frac{1}{2}$ INCH BELOW TOP OF TIMBER.

5. HOT-DIPPED GALVANIZED OR STAINLESS STEEL SCREWS FOR CROSS BRACE ATTACHMENT.

6. REMOVE AND DISPOSE OF DUFF AND TOP ORGANIC LAYERS DOWN TO MINERAL SOIL.

7. TENT PADS SHALL HAVE COMPACTED CRUSHED AGGREGATE BASE. AGGREGATE SHALL BE FLUSH WITH THE TOP OF THE TIMBER BORDER. SLOPE OF AGGREGATE BASE SHALL NOT EXCEED 3% IN ANY DIRECTION.

8. THE EXACT LOCATION & ORIENTATION OF THE TENT PAD WILL BE STAKED IN THE FIELD BY THE ENGINEER.

9/28/18 07:07 MARKL F:\ CAD STANDARDS\AGENCY STANDARDS\FOREST SERVICE\NFS-CTB.DWG;

United States Department of Agriculture
Forest Service

REGION 1
NORTHERN REGION

PROJECT NAME
ASHLEY LAKE NORTH CAMPGROUND RENOVATION
FLATHEAD NATIONAL FOREST
TALLY LAKE RANGER DISTRICT

DRAWING TITLE
TENT PAD & STORAGE SHED PAD DETAILS

DATE	DESIGNER	CHECKED	DWG SHEET NO.	SHEET
05/20/2026	CL3	C. STEEN	18	18 OF 40

NO.	REVISION DESCRIPTION	BY	DATE
△			
△			
△			

BARRIER ROCK, FOOD STORAGE LOCKER & FEE TUBE DETAILS

BARRIER ROCKS

TYPICAL INSTALLATION DETAIL

NO SCALE

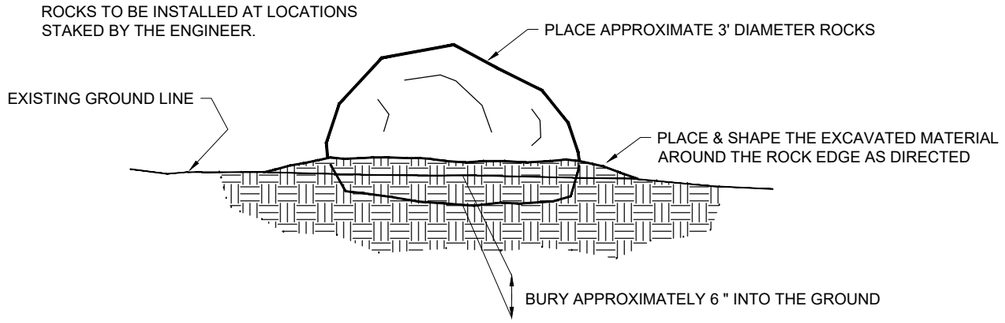

FEE TUBE

TYPICAL INSTALLATION DETAIL

No Scale

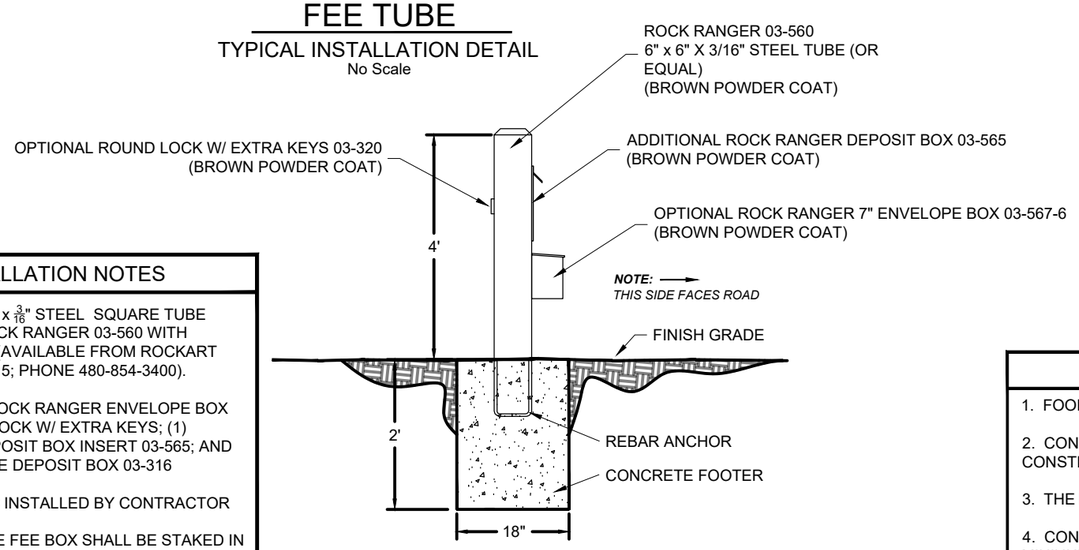

FEE TUBE INSTALLATION NOTES

1. THE FEE TUBE WILL BE 6" x 6" x $\frac{3}{16}$" STEEL SQUARE TUBE EQUAL TO OR BETTER THAN ROCK RANGER 03-560 WITH BROWN POWDER COAT FINISH. (AVAILABLE FROM ROCKART INDUSTRIES, LLC, MESA, AZ 85215; PHONE 480-854-3400).

2. ALSO ORDER (1) OPTIONAL ROCK RANGER ENVELOPE BOX 03-567-6; (1) OPTIONAL ROUND LOCK W/ EXTRA KEYS; (1) ADDITIONAL ROCK RANGER DEPOSIT BOX INSERT 03-565; AND (1) OPTIONAL PAD LOCK FOR THE DEPOSIT BOX 03-316

3. FEE TUBE IS FURNISHED AND INSTALLED BY CONTRACTOR

4. THE EXACT LOCATION OF THE FEE BOX SHALL BE STAKED IN THE FIELD BY THE ENGINEER.

FOOD STORAGE LOCKERS

TYPICAL INSTALLATION DETAIL

NO SCALE

CONTRACTOR INSTALLED
FOOD STORAGE LOCKERS
(1 - GOVERNMENT FURNISHED)
(6 - CONTRACTOR FURNISHED)

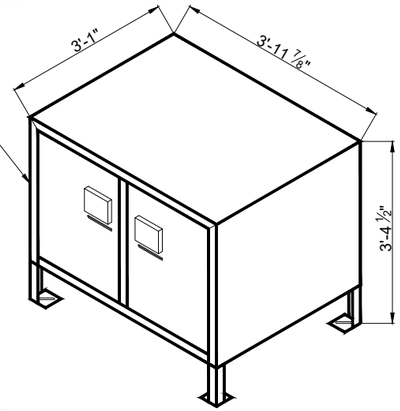

FOOD STORAGE LOCKER SHALL BE LARGE DOUBLE FOOD STORAGE LOCKER MODEL FS-30-DFL WITH STAINLESS STEEL LOCKING HASPS
COLOR FOREST BROWN AS MANUFACTURED BY BEAR SAVER, ONTARIO, CA.
PH: 1 (909) 605-1697 www.bearsaver.com
OR AN APPROVED EQUAL.

CONSTRUCT CONCRETE SUPPORT PAD WITH #4, GRADE 60 REBAR @ 12" OC BOTH WAYS, CENTERED 2" BELOW TOP OF CONCRETE PAD.

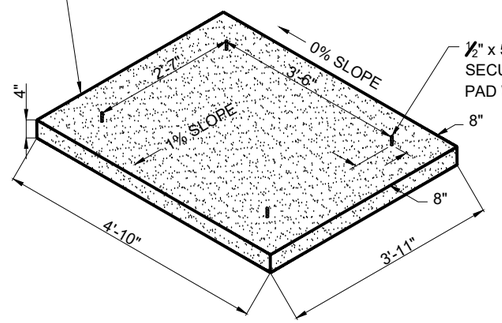

½" x 5" J-BOLTS, 3" EMBEDMENT
SECURE FOOD STORAGE LOCKER TO SUPPORT PAD WITH ½" NUT & WASHER AT EACH J-BOLT.

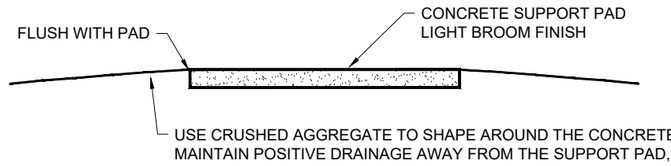

USE CRUSHED AGGREGATE TO SHAPE AROUND THE CONCRETE PAD TO MAINTAIN POSITIVE DRAINAGE AWAY FROM THE SUPPORT PAD, AS DIRECTED.

FOOD STORAGE LOCKER INSTALLATION NOTES

1. FOOD STORAGE LOCKERS AND CONCRETE SUPPORT PADS & HARDWARE SHALL BE CONTRACTOR-FURNISHED. FSSS 601.

2. CONTRACTOR SHALL VERIFY MOUNTING BOLT PATTERN WITH DELIVERED FOOD STORAGE LOCKERS PRIOR TO CONSTRUCTING CONCRETE SUPPORT PADS.

3. THE EXACT LOCATIONS AND ORIENTATION OF THE STORAGE LOCKERS SHALL BE STAKED IN THE FIELD BY THE ENGINEER.

4. CONNECT ALL FOOD STORAGE LOCKER TO CAMPGROUND LOOP ROAD WITH ACCESSABLE AGGREGATE PAD. MAINTAIN MININUMUM 3% SLOPE IN ALL DIRECTIONS.

9/28/18 07:07 MARKL F:_CAD STANDARDS\AGENCY STANDARDS\FOREST SERVICE\NFS-CTB.DWG;

United States Department of Agriculture
Forest Service

REGION 1
NORTHERN REGION

PROJECT NAME
ASHLEY LAKE NORTH CAMPGROUND RENOVATION
FLATHEAD NATIONAL FOREST
TALLY LAKE RANGER DISTRICT

DRAWING TITLE
BARRIER ROCK,FOOD STORAGE LOCKER & FEE TUBE

DATE	DESIGNER	CHECKED	DWG SHEET NO.	SHEET
05/20/2026	CL3	C. STEEN	19	19 OF 40

NO.	REVISION DESCRIPTION	BY	DATE
△			
△			
△			

HOST SITE UTILITIES & HOLDING TANK DETAILS

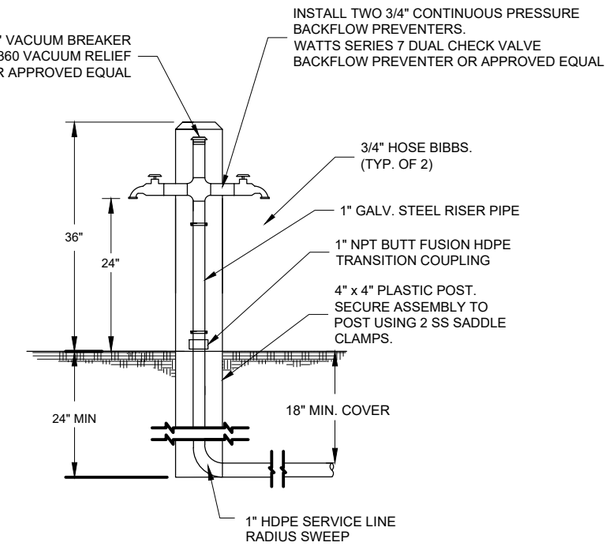

HOST SITE WATER HYDRANT

OPTION ITEM 3
No Scale

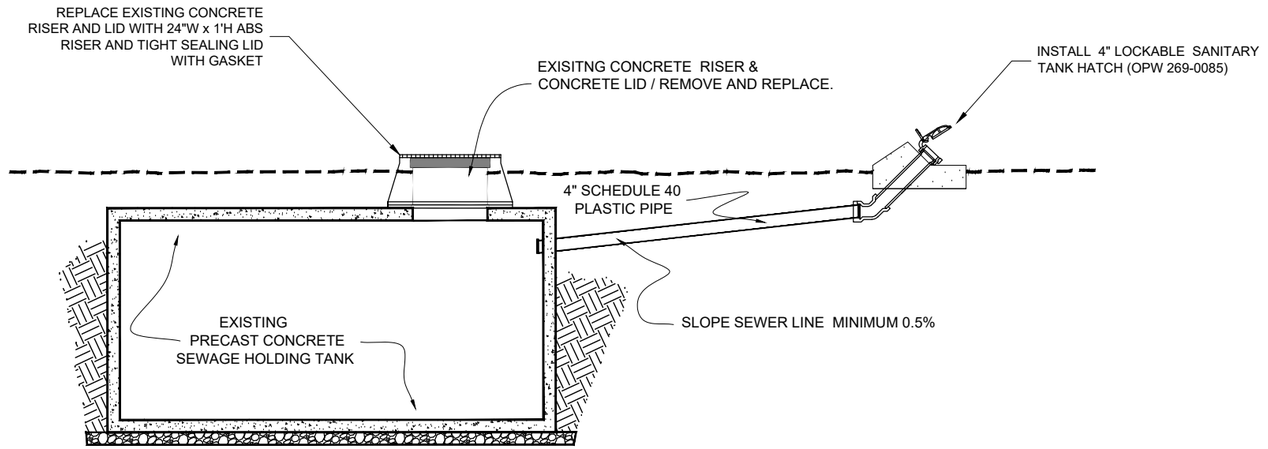

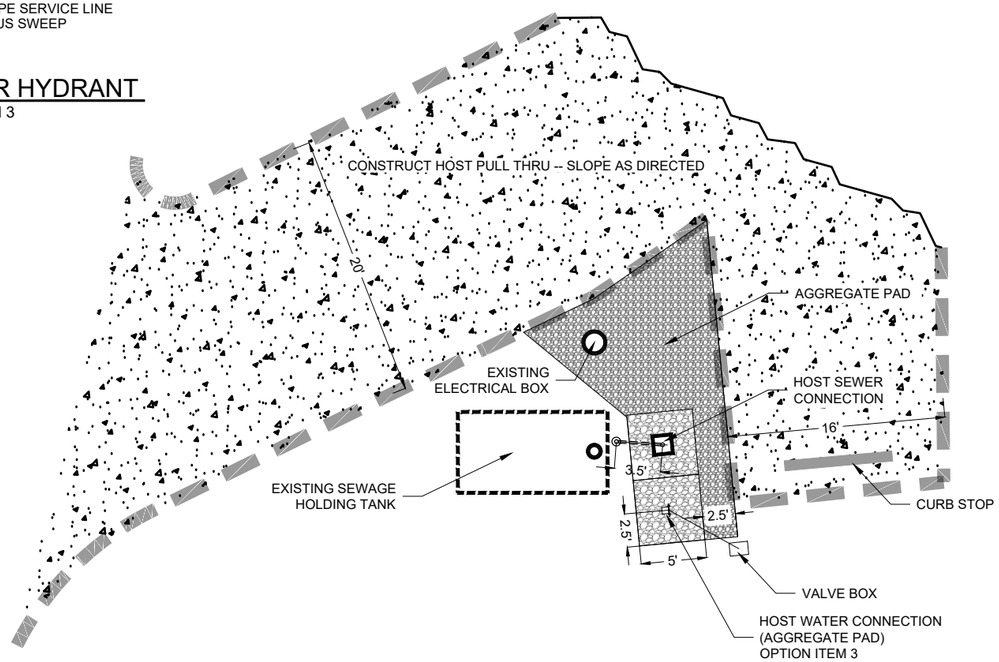

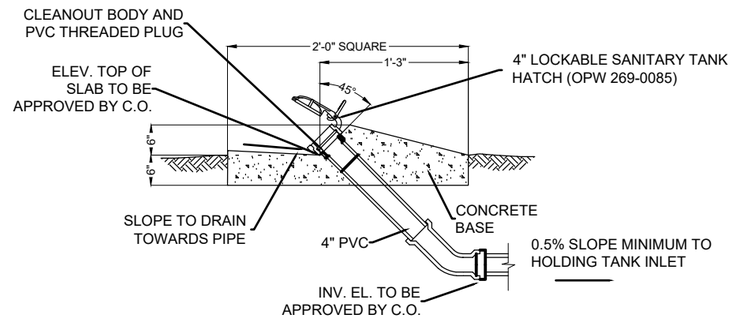

HOST SEWER CONNECTION

No Scale

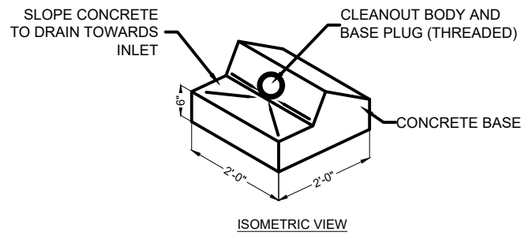

ISOMETRIC VIEW

9/28/18 07:07 MARKL F:_CAD STANDARDS\AGENCY STANDARDS\FOREST SERVICE\NFS-CTB.DWG;

United States Department of Agriculture
Forest Service

REGION 1
NORTHERN REGION

PROJECT NAME
ASHLEY LAKE NORTH CAMPGROUND RENOVATION
FLATHEAD NATIONAL FOREST
TALLY LAKE RANGER DISTRICT

DRAWING TITLE
HOST SITE UTILITIES & HOLDING TANK DETAILS

DATE	DESIGNER	CHECKED	DWG SHEET NO.	SHEET
05/20/2026	CL3	C. STEEN	20	20 OF 40

NO.	REVISION DESCRIPTION	BY	DATE
1			
2			
3			

BENCH WITH BACKREST & ARMREST

TYPICAL INSTALLATION DETAIL

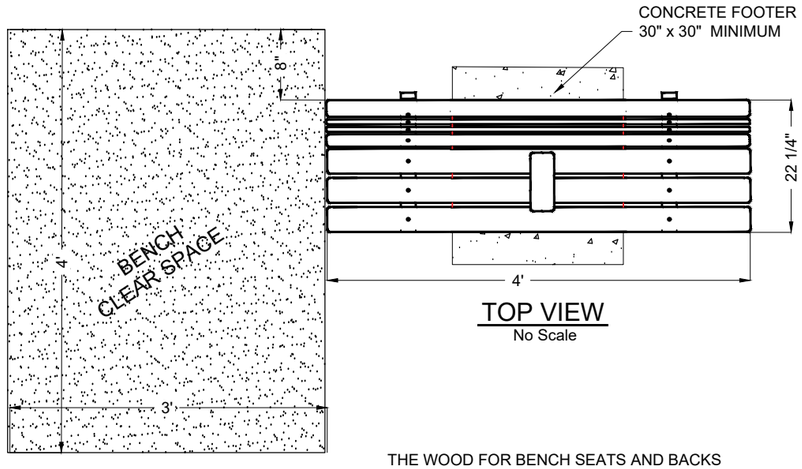

TOP VIEW
No Scale

THE WOOD FOR BENCH SEATS AND BACKS WILL BE 3" x 4" FOR EACH SEAT AND EACH BACK. ATTACH WOOD TO CHANNEL FRAME BY INSERTING FASTENERS THROUGH ALL FRAME HOLES.

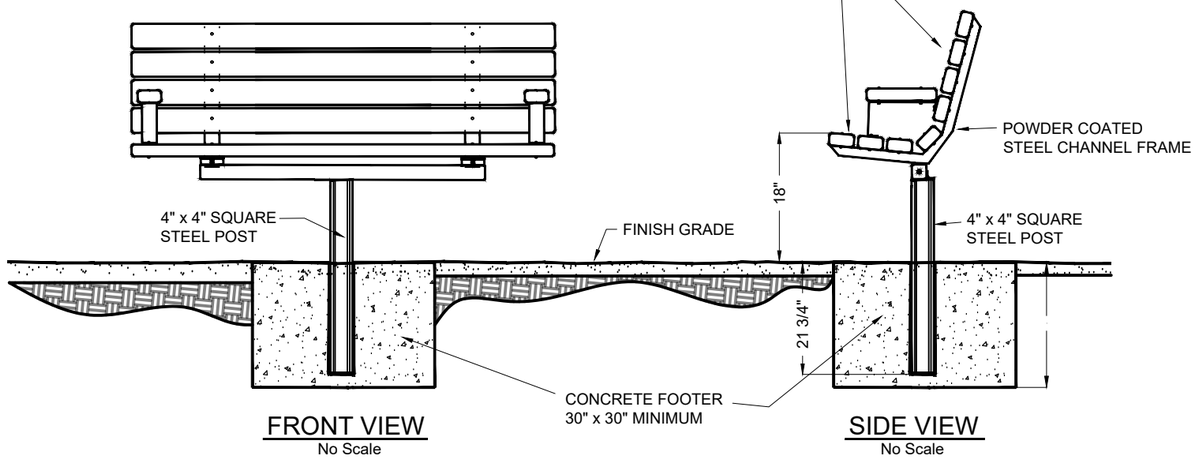

FRONT VIEW
No Scale

SIDE VIEW
No Scale

MOORING POST

TYPICAL INSTALLATION DETAIL
No Scale

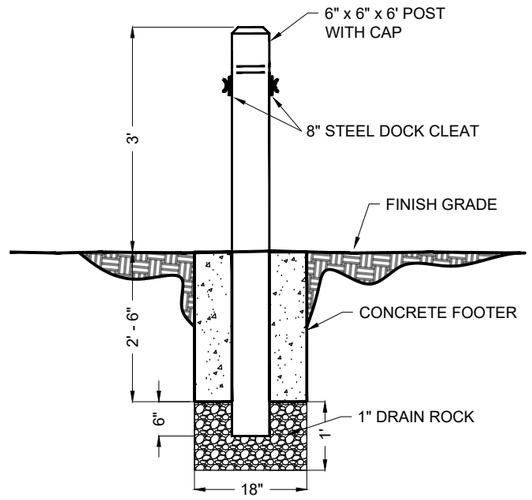

GENERAL NOTES FOR MOORING POST

1. THE MOORING POST WILL BE 6" x 6" x 3/8" POWDER COATED SQUARE TUBE WITH CAP. POWDER COAT COLOR SHALL BE FED-STD-595C #20059 (FOREST SERVICE BROWN) OR SIMILAR (COLOR TO BE AGREED UPON BY FOREST SERVICE).

2. PREPACKAGED CONCRETE MIX IS ACCEPTABLE.

3. EMBED 6" OF MOORING POST INTO DRAIN ROCK TO ENSURE DRAINAGE

3. TWO 8" 316 GRADE STAINLESS STEEL EVERBILT #41644 DOCK CLEAT (OR EQUAL) SHALL BE ATTACHED TO THE STEEL MOORING POST UTILIZING VANDAL PROOF HARDWARE.

4. THE EXACT LOCATIONS OF THE MOORING POSTS SHALL BE STAKED IN THE FIELD BY THE ENGINEER.

GENERAL NOTES FOR BENCH

1. BENCH FRAMES, CONSTRUCTION HEART REDWOOD FOR BENCH SEATS AND BACKS, AND MOUNTING HARDWARE SHALL BE EQUAL TO OR BETTER THAN PILOT ROCK OWRB 4 WITH BLACK POWDER COAT FINISH AND ARMRESTS TO MATCH. (AVAILABLE FROM RJ THOMAS MFG. CO., INC. CHEROKEE, IA 51012-0946; PHONE: 712-225-5115 or 800-762-5002)

2. TWO BENCHES WILL HAVE A SINGLE ARMREST PLACED IN THE MIDDLE OF THE BENCH. TWO BENCHES WILL HAVE TWO ARMRESTS, ONE PLACED AT EACH END. TOTAL OF 6 ARMRESTS INSTALLED.

3. PREPACKAGED CONCRETE MIX IS ACCEPTABLE.

4. PRIOR TO ATTACHMENT, TWO COATS OF EXTERIOR WOOD STAIN, SUPERDECK EXTERIOR (SHERWIN WILLIAMS) OR EQUAL, SHALL BE APPLIED TO ALL ABOVE-GROUND SURFACES OF WOOD TOP MEMBERS. COLOR OF THE STAIN SHALL BE FED-STD-595C #20059 (FOREST SERVICE BROWN) OR SIMILAR (COLOR TO BE AGREED UPON BY FOREST SERVICE).

5. THE EXACT LOCATIONS AND ORIENTATION OF THE BENCHES SHALL BE STAKED IN THE FIELD BY THE ENGINEER.

9/28/18 07:07 MARKL F:_CAD STANDARDS\AGENCY STANDARDS\FOREST SERVICE\WFS-CTB.DWG;

United States Department of Agriculture
Forest Service

REGION 1
NORTHERN REGION

PROJECT NAME
ASHLEY LAKE NORTH CAMPGROUND RENOVATION
FLATHEAD NATIONAL FOREST
TALLY LAKE RANGER DISTRICT

DRAWING TITLE
BENCH & MOORING POST

DATE	DESIGNER	CHECKED	DWG SHEET NO.	SHEET
05/20/2026	CL3	C. STEEN	21	21 OF 40

NO.	REVISION DESCRIPTION	BY	DATE
1			
2			
3			

OVERLAPPING TIMBER STEP

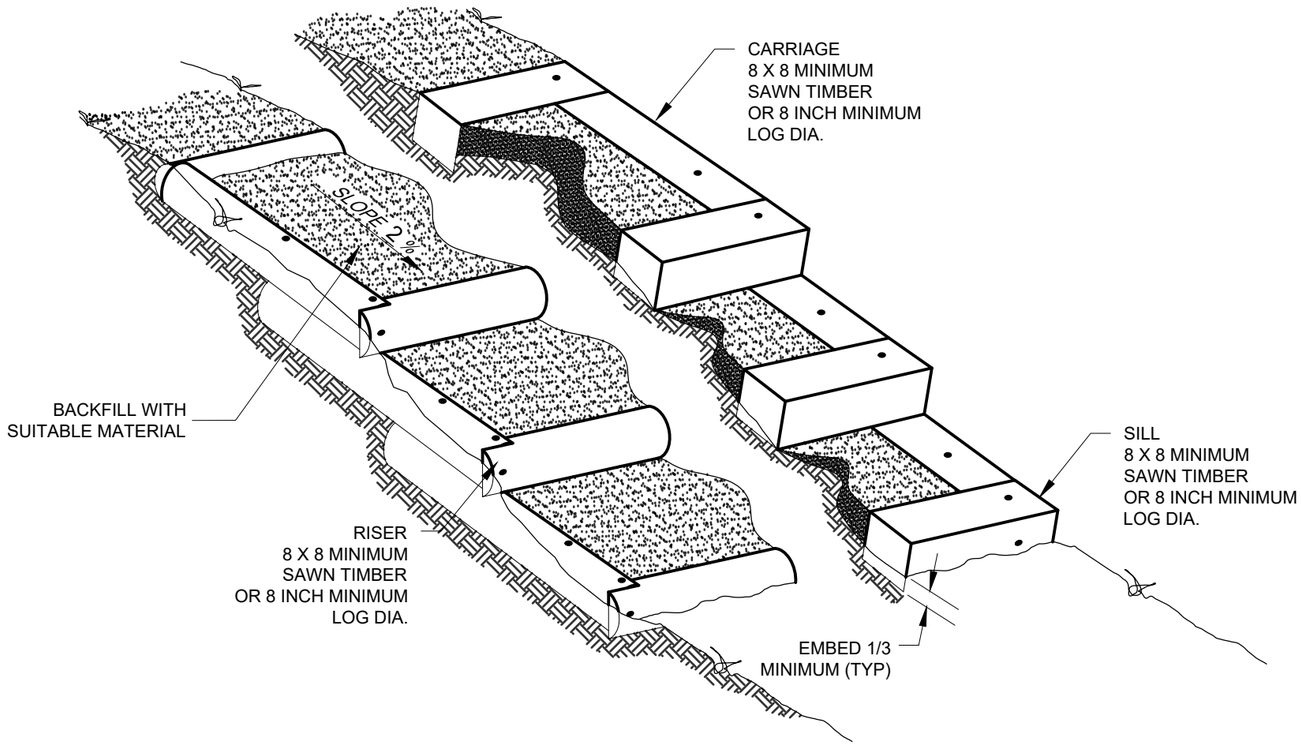

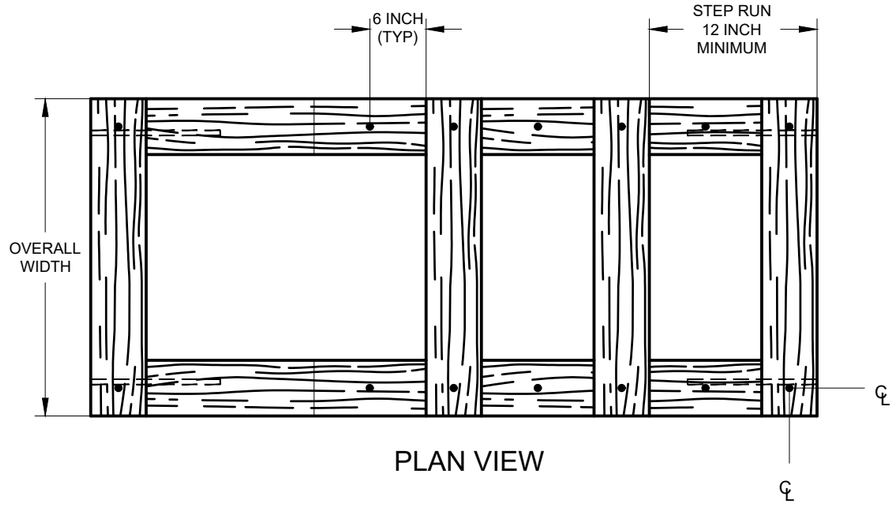

PLAN VIEW

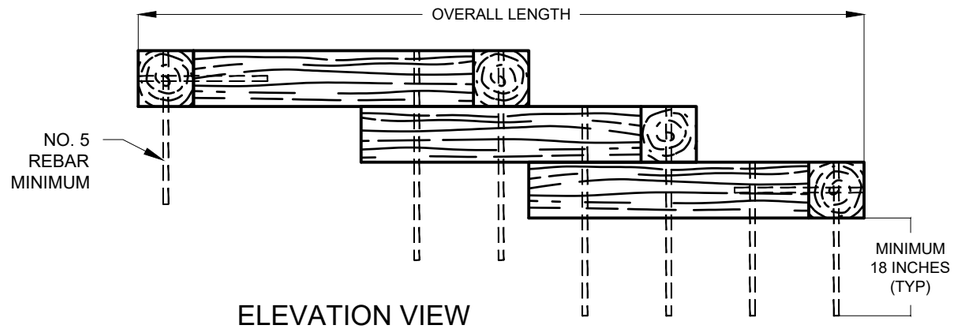

ELEVATION VIEW

NOTES:

1. PRE-DRILL HOLES FOR REBAR AND PINS TO PREVENT SPLITTING OF LOGS OR SAWN TIMBERS.
2. RECESS END OF REBAR 1/2 INCH BELOW TOP OF TIMBER.
3. COMPACT BACKFILL IN 6 INCH LIFTS UNTIL NO VISUAL DISPLACEMENT.
4. ALL FIELD DRILLED HOLES AND CUTS SHALL BE FIELD TREATED.
5. REMOVE AND DISPOSE OF DUFF AND TOP ORGANIC LAYERS DOWN TO MINERAL SOIL.
6. MINIMUM OVERLAP OF BOTTOM CARRIAGE IS THE SAME AS THE STEP RUN LENGTH.
7. RISERS AND CARRIAGES SHALL BE THE SAME DIMENSIONS.

STEP #	MATERIAL TYPE	OVERALL LENGTH	OVERALL WIDTH	STEP RUN	COMMENTS
OTS-1	SAWN TIMBER	28'	48"	16.5"	ROUGHLY 18 STEPS
OTS-2	SAWN TIMBER	23'	48"	16.5"	ROUGHLY 14 STEPS
OTS-3	SAWN TIMBER	19'	48"	24"	ROUGHLY 8 STEPS

MATERIAL	SIZE	SPECIES/ GRADE	PRESERV. TYPE	
SAWN TIMBER	8" x 8"	DOUGLAS FIR	UC4B	GROUND CONTACT / HEAVY DUTY
PRESERVATIVE TREATMENT - (REFER TO AWPA USE CATEGORY SYSTEM)				WATERBORNE TREATMENT

United States Department of Agriculture
Forest Service

REGION 1
NORTHERN REGION

PROJECT NAME
ASHLEY LAKE NORTH CAMPGROUND RENOVATION
FLATHEAD NATIONAL FOREST
TALLY LAKE RANGER DISTRICT

DRAWING TITLE
OVERLAPPING TIMBER STEP

DATE	DESIGNER	CHECKED
05/20/2026	CL3	C. STEEN

NO.	REVISION DESCRIPTION	BY	DATE
1			
2			
3			

DWG SHEET NO. **22**

SHEET **22** OF **40**

9/28/18 07:07 MARKL F:_CAD STANDARDS\AGENCY STANDARDS\FOREST SERVICE\NFS-CTB.DWG;

SINGLE PANEL ROOFED KIOSK

NO SCALE

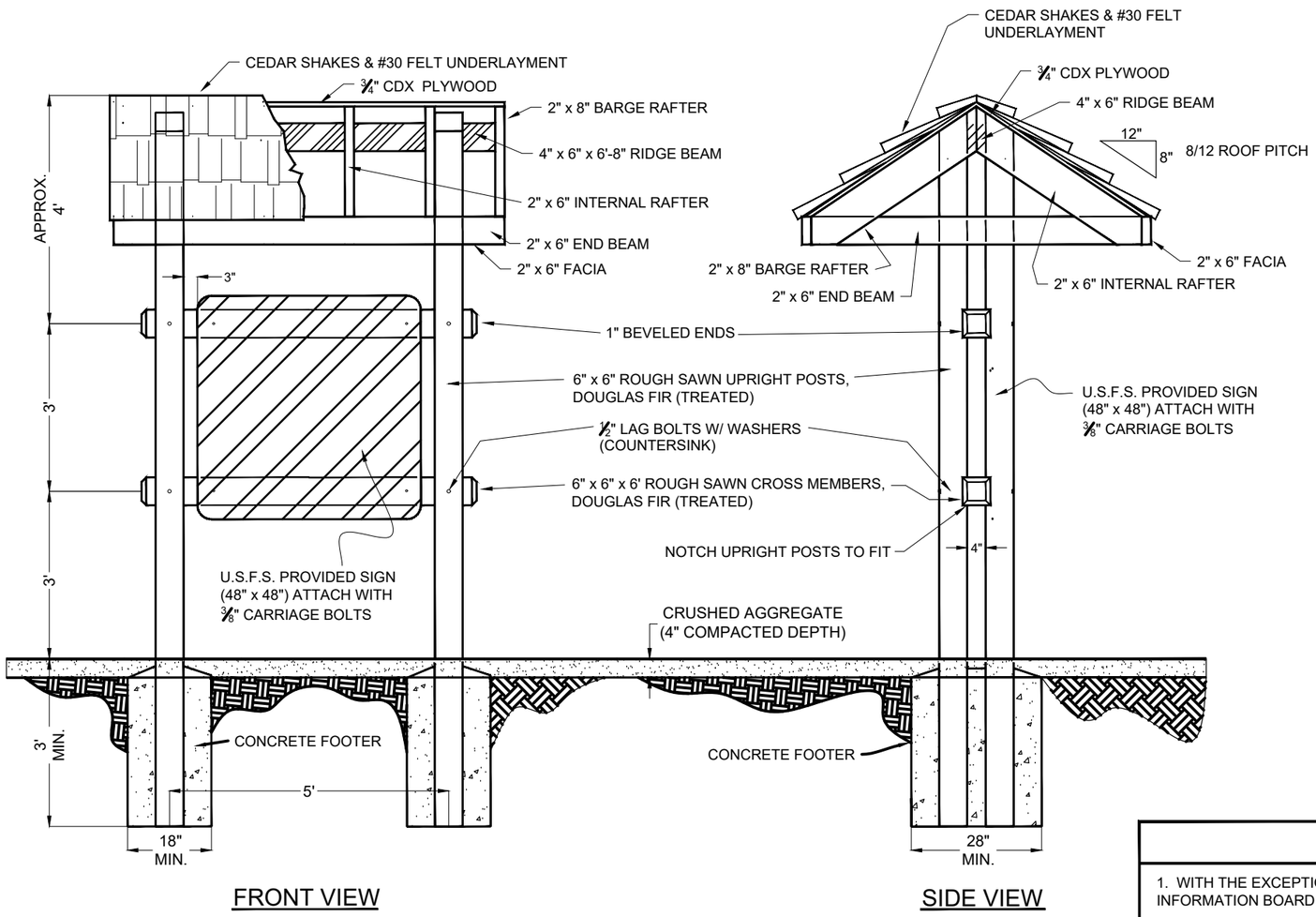

FRONT VIEW

SIDE VIEW

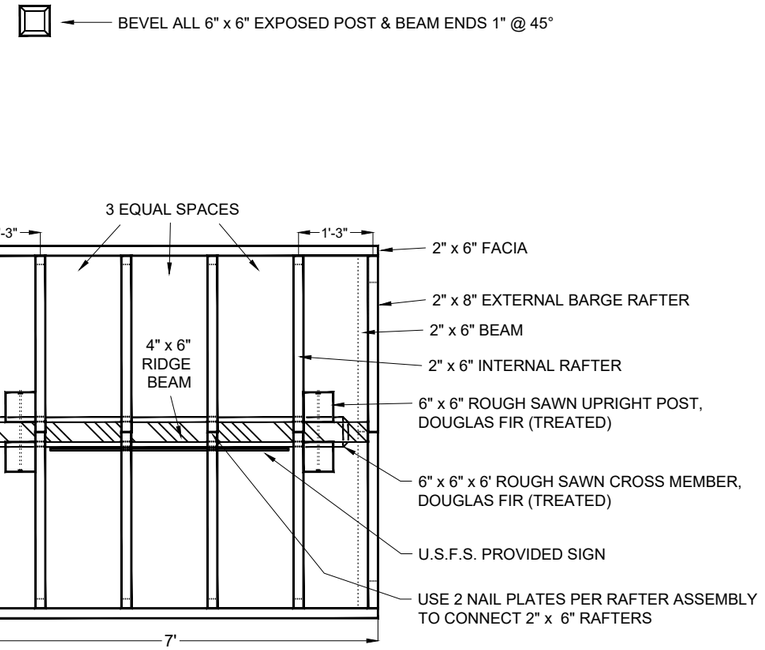

ROOF PLAN VIEW

GENERAL NOTES

1. WITH THE EXCEPTION OF THE GOVERNMENT-FURNISHED SIGN PANELS, ALL MATERIALS FOR THE SINGLE PANEL KIOSK AND THE INFORMATION BOARD SHALL BE FURNISHED AND INSTALLED BY THE CONTRACTOR.

2. EXACT LOCATION AND ORIENTATION OF KIOSKS AND INFORMATION BOARDS ALONG WITH THE SIZE AND SHAPE OF THEIR CRUSHED AGGREGATE PADS SHALL BE STAKED IN THE FIELD BY THE ENGINEER.

3. PREPACKAGED CONCRETE MIX IS ACCEPTABLE FOR KIOSK AND INFORMATION BOARD CONCRETE FOOTERS.

4. TWO COATS OF EXTERIOR WOOD STAIN, SUPERDECK EXTERIOR (SHERWIN WILLIAMS) OR EQUAL, SHALL BE APPLIED TO ALL ABOVE-GROUND SURFACES OF WOOD TOP MEMBERS. COLOR OF THE STAIN SHALL BE FED-STD-595C #20059 (FOREST SERVICE BROWN) OR SIMILAR (COLOR TO BE AGREED UPON BY FOREST SERVICE).

9/28/18 07:07 MARKL F:\ CAD STANDARDS\AGENCY STANDARDS\FOREST SERVICE\NFS-CTB.DWG;

United States Department of Agriculture
Forest Service

REGION 1
NORTHERN REGION

PROJECT NAME
ASHLEY LAKE NORTH CAMPGROUND RENOVATION
FLATHEAD NATIONAL FOREST
TALLY LAKE RANGER DISTRICT

DRAWING TITLE
SINGLE PANEL KIOSK DETAILS

DATE	DESIGNER	CHECKED	DWG SHEET NO.	SHEET
05/20/2026	CL3	C. STEEN	23	23 OF 40

NO.	REVISION DESCRIPTION	BY	DATE
△			
△			
△			

PRECAST CONCRETE SST TOILET

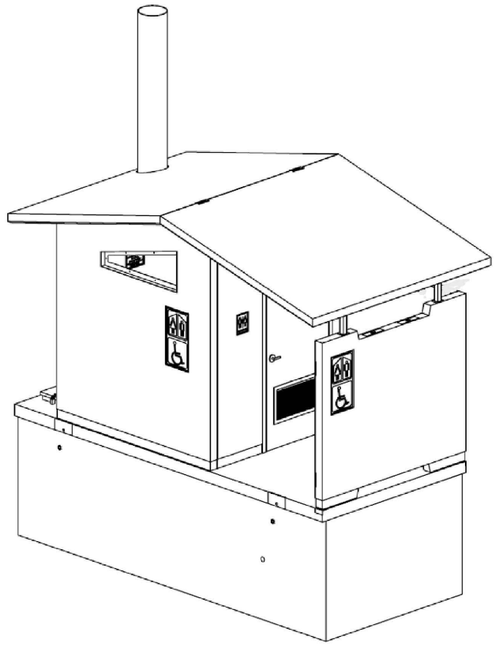

CONCRETE VAULT TOILET SPECIFICATIONS

a.	TYPE:	SINGLE VAULT TOILET
b.	EXTERIOR:	BARNWOOD LOOK
c.	SCREEN:	FULL SCREEN
d.	ROOF:	SIMULATED WOOD SHAKE ROOF
e.	COLOR:	DARK BROWN CONCRETE
f.	SIGNAGE:	UNISEX - ADA
g.	VENT SCREEN:	REQUIRED - INSTALLED OVER VENT
h.	FLOOR PLANS:	RIGHT HANDED FLOOR PLAN

ACCEPTED MANUFACTURERS AND MODELS (OR APPROVED EQUAL):

- MISSOULA CONCRETE - ASPEN
- CXT - GUNNISON

GENERAL NOTES:

- INSTALLATION SHALL COMPLY WITH CONTRACT SPECIFICATIONS AND TOILET MANUFACTURERS INSTALLATION INSTRUCTIONS.
- CONTRACTOR SHALL PROVIDE EXCAVATION AND EARTHWORK NECESSARY TO INSTALL CONCRETE VAULT TOILET IN CONFORMANCE TO CONTRACT SPECIFICATIONS AND TOILET MANUFACTURERS INSTALLATION INSTRUCTIONS.
- CONTRACTOR SHALL PROCURE, DELIVER, AND INSTALL CONCRETE VAULT TOILET.
- FINISH GRADES SHALL PROVIDE POSITIVE DRAINAGE AWAY FROM FOUNDATION WALLS. GRADE SHALL FALL A MINIMUM OF 6 INCHES WITHIN THE FIRST 10 FEET ON ALL SIDES OF THE TOILET STRUCTURE.
- BEFORE FINAL ACCEPTANCE, CONTRACTOR SHALL PROVIDE FINISH GRADING AND SITE CLEANUP.

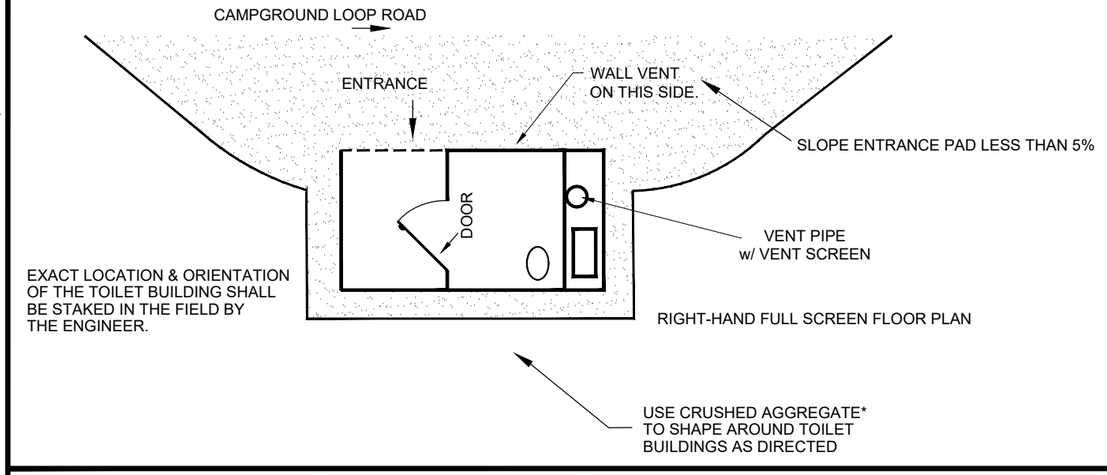

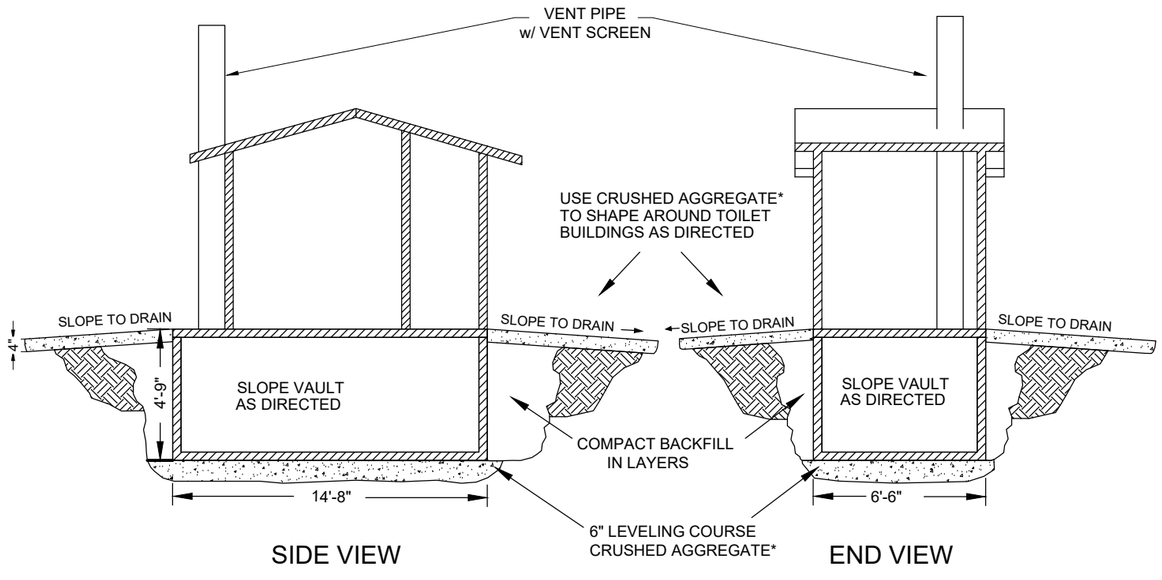

NOTE: VAULT DIMENSIONS SHOWN ARE APPROXIMATE.

* 7 CY CRUSHED AGGREGATE PLACEMENT -- ITEM 30207

9/28/18 07:07 MARKL F:_CAD STANDARDS\AGENCY STANDARDS\FOREST SERVICE\NFS-CTB.DWG;

United States Department of Agriculture
Forest Service

REGION 1
NORTHERN REGION

PROJECT NAME
ASHLEY LAKE NORTH CAMPGROUND RENOVATION
FLATHEAD NATIONAL FOREST
TALLY LAKE RANGER DISTRICT

DRAWING TITLE
PRECAST CONCRETE SST DETAILS

DATE	DESIGNER	CHECKED	DWG SHEET NO.	SHEET
05/20/2026	CL3	C. STEEN	24	24 OF 40

NO.	REVISION DESCRIPTION	BY	DATE
1			
2			
3			

SINGLE SIDED ENTRY SIGN

NO SCALE

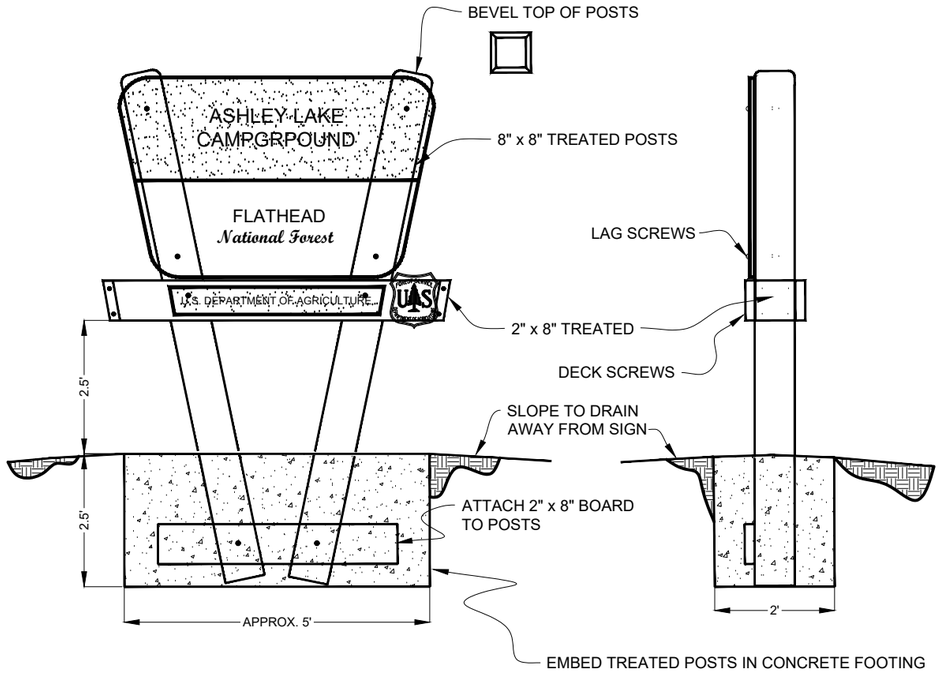

INSTALLATION NOTES FOR SINGLE SIDED ENTRY SIGNS:

1. PRIOR TO PURCHASING 8" x 8" POSTS VERIFY LENGTHS NEEDED.

2. TWO COATS OF EXTERIOR WOOD STAIN, SUPERDECK EXTERIOR (SHERWIN WILLIAMS) OR EQUAL, SHALL BE APPLIED TO ALL ABOVE GROUND SURFACES OF THE 8" x 8" POSTS AND THE 2" x 8" CROSS PIECES. COLOR OF THE STAIN SHALL BE FED-STD-595C #20059 (FOREST SERVICE BROWN) OR SIMILAR (COLOR TO BE AGREED UPON BY FOREST SERVICE).

3. CONCRETE SHALL MEET THE REQUIREMENTS OF FSSS 601.

4. INSTALLATION SHALL BE COMPLETED USING VANDAL RESISTANT BOLTS & NUTS. ALL BOLTS SHALL BE ZINC OR CADMIUM COATED UNLESS OTHERWISE NOTED.

4. PLACE WASHER BETWEEN BOLT HEAD AND REFLECTIVE SHEETING TO PREVENT TORQUE DAMAGE TO SHEETING.

5. TIGHTEN BOLTS SNUG BUT DO NOT RUPTURE THE WOOD OVERLAY ON THE SIGN FACE.

6. USE EXCAVATED MATERIAL TO SHAPE AROUND CONCRETE FOOTING AS DIRECTED.

7. EXACT LOCATION AND ORIENTATION OF THE ENTRY SIGNS SHALL BE STAKED IN THE FIELD BY THE ENGINEER.

TYPICAL SIGN INSTALLATIONS (1 OR 2 POST SIGNS)

NO SCALE

ALL SIGNS SHALL BE INSTALLED IN ACCORDANCE WITH THE MANUAL ON UNIFORM TRAFFIC CONTROL DEVICES (MUTCD) STANDARDS.

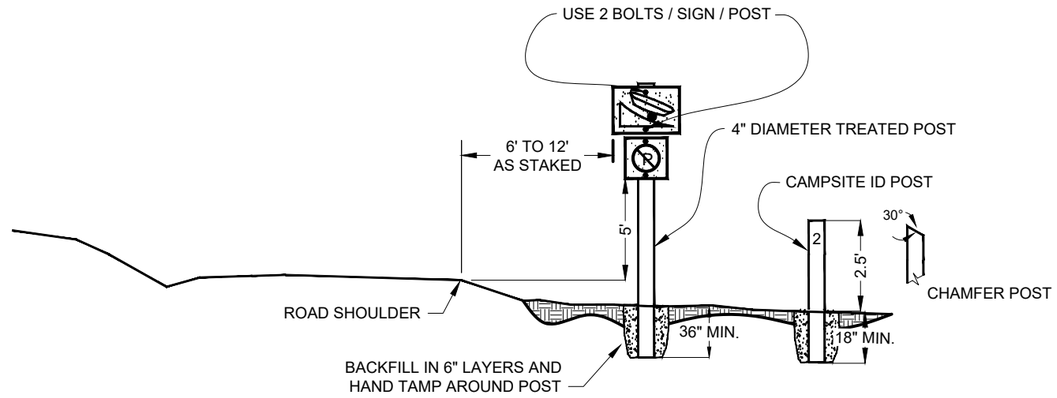

INSTALLATION NOTES FOR 1 OR 2 POSTS SIGNS: CAMPGROUND ONLY

1. WITH THE EXCEPTION OF THE GOVERNMENT FURNISHED SIGN PANELS, ALL TREATED POSTS AND MOUNTING HARDWARE SHALL BE FURNISHED BY THE CONTRACTOR.

2. PLACE WASHER BETWEEN BOLT HEAD AND REFLECTIVE SHEETING TO PREVENT TORQUE DAMAGE TO SHEETING.

3. SIGN POSTS WITHIN THE CAMPGROUND SHALL BE 4" DIAMETER TREATED ROUND.

4. ALL APPROACH SIGNS AND GUIDE SIGNS SHALL BE 4" TREATED SQUARE.

5. 4" TREATED SIGN POSTS DO NOT REQUIRE ADDITIONAL STAINING.

6. CAMPSITE ID POSTS SHALL BE SOLID PLASTIC 4x4 POST WITH 30° CHAMFER. COLOR: DARK BROWN.

7. EXACT LOCATION OF SIGN INSTALLATIONS SHALL BE STAKED IN THE FIELD BY THE ENGINEER.

9/28/18 07:07 MARKL F:_CAD STANDARDS\AGENCY STANDARDS\FOREST SERVICE\NFS-CTB.DWG;

United States Department of Agriculture
Forest Service

REGION 1
NORTHERN REGION

PROJECT NAME
ASHLEY LAKE NORTH CAMPGROUND RENOVATION
FLATHEAD NATIONAL FOREST
TALLY LAKE RANGER DISTRICT

DRAWING TITLE
SINGLE PANEL ENTRY SIGN & TYPICAL SIGN INSTALLATION

DATE	DESIGNER	CHECKED	DWG SHEET NO.	SHEET
05/20/2026	CL3	C. STEEN	25	25 OF 40

NO.	REVISION DESCRIPTION	BY	DATE
1			
2			
3			

SITE APPROACH & FOREST DESTINATION SIGN PLACEMENT

NOT TO SCALE

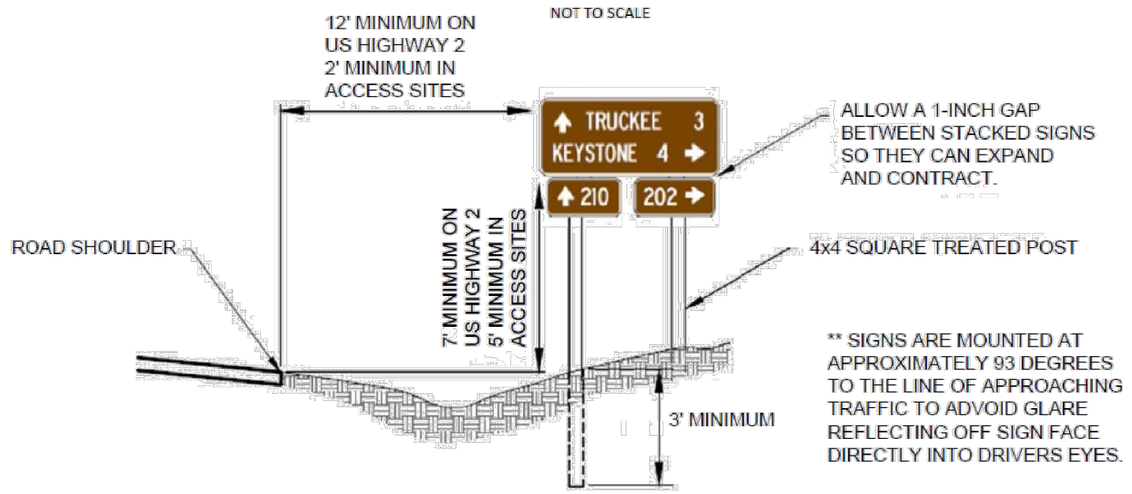

ROUTE MARKER & REGULATORY SIGN PLACEMENT

NOT TO SCALE

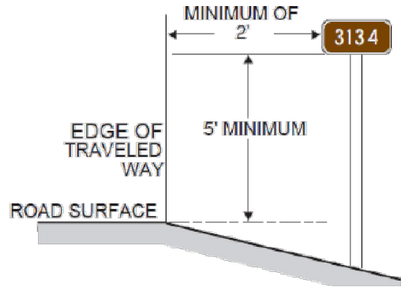

SQUARE TUBE INSTALLATION

NOT TO SCALE

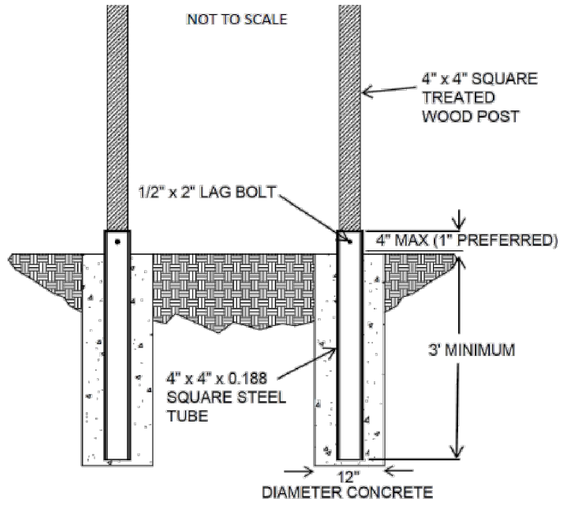

9/28/18 07:07 MARKL F:_CAD STANDARDS\AGENCY STANDARDS\FOREST SERVICE\NFS-CTB.DWG;

United States Department of Agriculture
Forest Service

REGION 1
NORTHERN REGION

PROJECT NAME
ASHLEY LAKE NORTH CAMPGROUND RENOVATION
FLATHEAD NATIONAL FOREST
TALLY LAKE RANGER DISTRICT

DRAWING TITLE
SIGN PLACEMENT TYPICALS

DATE	DESIGNER	CHECKED	DWG SHEET NO.	SHEET
05/20/2026	CL3	C. STEEN	26	26 OF 40

NO.	REVISION DESCRIPTION	BY	DATE
1			
2			
3			

ASHLEY LAKE NORTH CAMPGROUND

SIGN PLAN

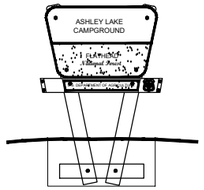

SINGLE SIDED SITE ENTRY SIGN
(LOCATION NEAR JUNCTION
WITH RD. #912, AS STAKED)
--- SEPARATE PAY ITEM

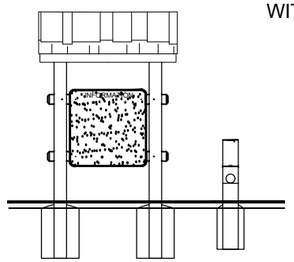

SINGLE PANEL KIOSK AND FEE TUBE
--- SEPERATE PAY ITEMS

STOP

STOP SIGN
--- (1 SIGN & 1 POST)

CAMPING
PARKING

DIRECTIONAL SIGN
--- (1 SIGN & 1 POST)

RD. #912

DO NOT ENTER

DO NOT ENTER SIGN
--- (1 SIGN & 1 POST)

0' 20' 40' 60' 80' 120' 160' 240'

SCALE

N

1 CAMPSITE ID POST

2

3

4

5

6

7

8

9

10

11

12

KEEP LEFT

KEEP LEFT SIGN
--- (1 SIGN & 1 POST)

KEEP RIGHT

KEEP RIGHT SIGN
--- (1 SIGN & 1 POST)

HOST

HOST SIGN
--- (1 SIGN & 1 POST)

ONE WAY

ONE WAY SIGN
--- (1 SIGNS & 1 POSTS)

UNITS 10-12
UNITS 8-9

CAMP DIRECTIONAL SIGN
--- (1 SIGNS & 1 POSTS)

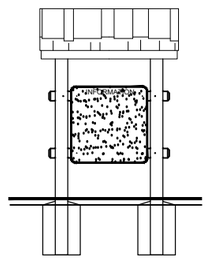

SINGLE PANEL KIOSK--- SEPERATE PAY ITEM

9/28/18 07:07 MARKL F:_CAD STANDARDS\AGENCY STANDARDS\FOREST SERVICE\NFS-CTB.DWG;

United States Department of Agriculture
Forest Service

REGION 1
NORTHERN REGION

PROJECT NAME
ASHLEY LAKE NORTH CAMPGROUND RENOVATION
FLATHEAD NATIONAL FOREST
TALLY LAKE RANGER DISTRICT

DRAWING TITLE
CAMPGROUND INTERNAL SIGN PLAN

DATE	DESIGNER	CHECKED	DWG SHEET NO.	SHEET
05/20/2026	CL3	C. STEEN	27	27 OF 40

NO.	REVISION DESCRIPTION	BY	DATE
△			
△			
△			

Ashley Lake – Sign Plan

Site Approach Signs

NOTES:

***Signs are government furnished. Contractor responsible for posts, hardware, square steel tube and concrete.**
****Utilities may be present. Contractor is responsible for requesting a utility locate prior to any ground disturbing activity.**
*****Refer to Sign Placement typical for installation guidance.**

Sign Details

LOCATION (AS STAKED)	TYPE	SIGN DESCRIPTION	SIZE	MATERIAL	MESSAGE	QTY	POSTS TREATED SQUARE (4")	STEEL TUBE SQUARE (4")	1/2" LAG BOLTS W/ WASHERS	DESCRIPTION OF WORK
1 & 2	Site Approach	SA-2	52" x 48"	Aluminum	(ACCESS) Ashley Lake	2	4	4	12	Install signs, steel tube, and posts approx. 520' from Batavia Lane approach.
1 & 2	Directional Arrow	M6-1L	21" x 15"	Aluminum	<-	2	--	--	4	Install sign below SA-2 on post.
3 & 4	Site Approach	SA-2	52" x 48"	Aluminum	(ACCESS) Ashley Lake	2	4	4	12	Install signs, steel tube, and posts approx. 520' from Ashley Lake Rd approach.
3 & 4	Directional Arrow	M6-1L	21" x 15"	Aluminum	<-	2	--	--	4	Install sign below SA-2 on post.

9/28/18 07:07 MARKL F:_CAD STANDARDS\AGENCY STANDARDS\FOREST SERVICE\NFS-CTB.DWG;

United States Department of Agriculture
Forest Service

REGION 1
NORTHERN REGION

PROJECT NAME
ASHLEY LAKE NORTH CAMPGROUND RENOVATION
FLATHEAD NATIONAL FOREST
TALLY LAKE RANGER DISTRICT

DRAWING TITLE
SITE APPROACH SIGN PLACEMENT LOCATIONS

DATE	DESIGNER	CHECKED
05/20/2026	CL3	C. STEEN

NO.	REVISION DESCRIPTION	BY	DATE
1			
2			
3			

DWG SHEET NO. 28

SHEET 28 OF 40

Ashley Lake Guide Signs

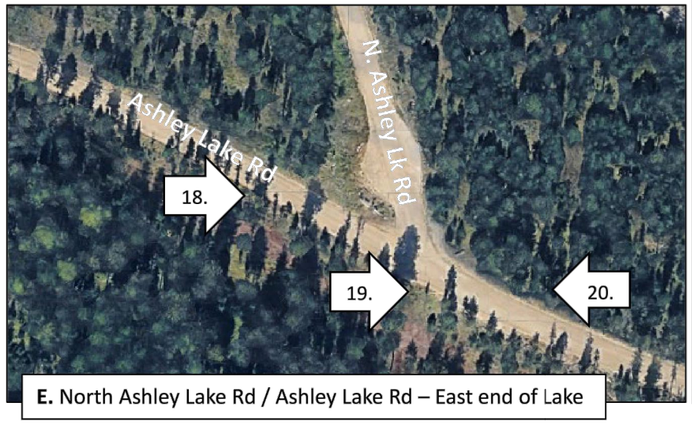

E. North Ashley Lake Rd / Ashley Lake Rd – East end of Lake

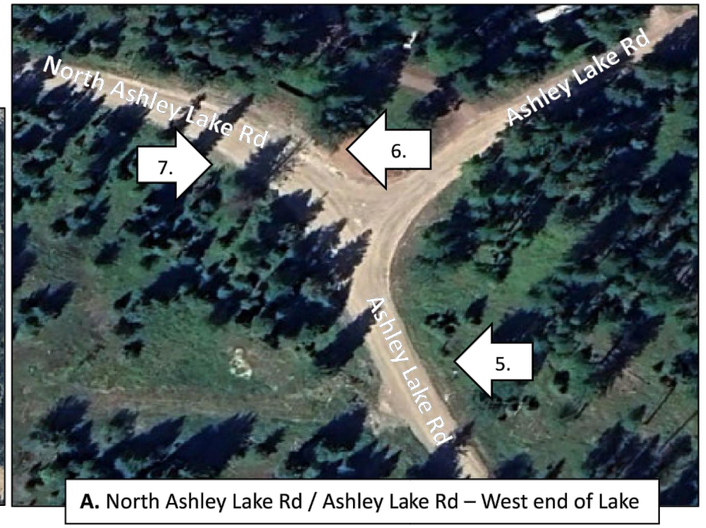

A. North Ashley Lake Rd / Ashley Lake Rd – West end of Lake

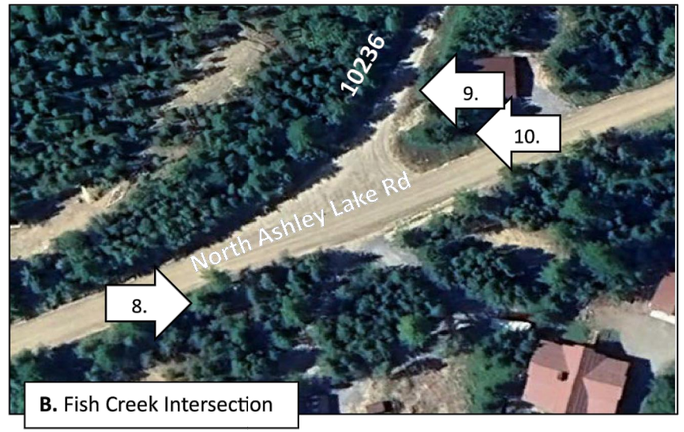

B. Fish Creek Intersection

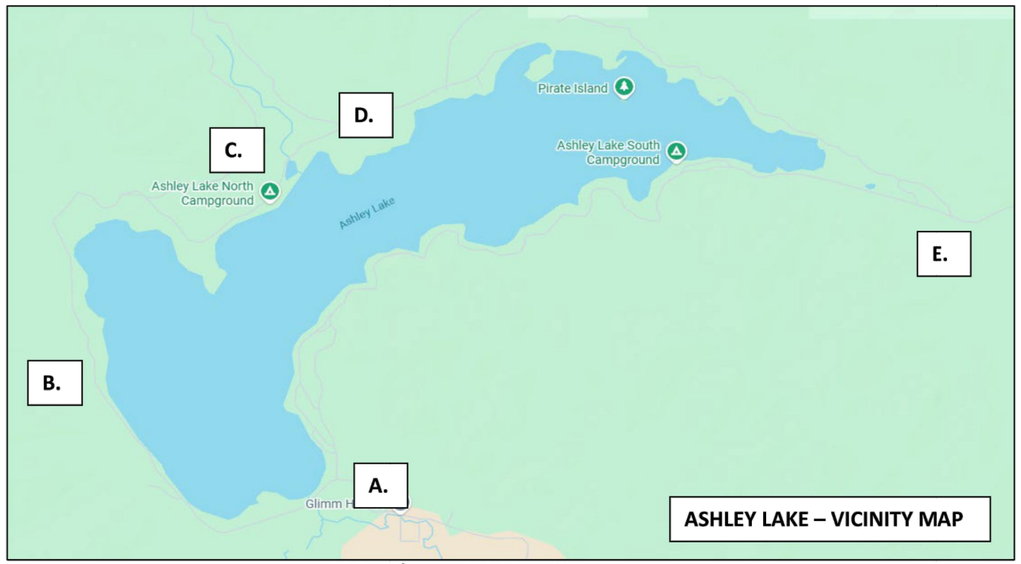

7.5 miles to US Hwy 2

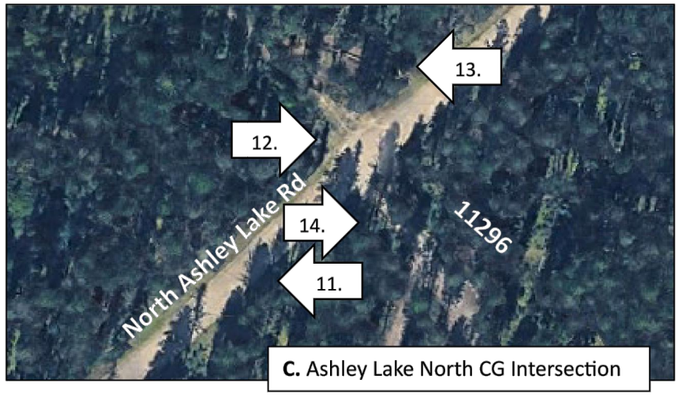

C. Ashley Lake North CG Intersection

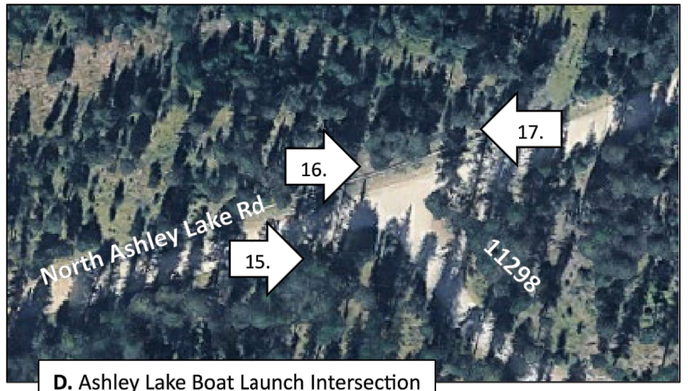

D. Ashley Lake Boat Launch Intersection

NOTES:

***Signs are government furnished. Contractor responsible for posts, hardware, square steel tube and concrete.**
****Utilities may be present. Contractor is responsible for requesting a utility locate prior to any ground disturbing activity.**
*****Refer to Sign Placement typical for installation guidance.**

9/28/18 07:07 MARKL F:_CAD STANDARDS\AGENCY STANDARDS\FOREST SERVICE\NFS-CTB.DWG;

United States Department of Agriculture
Forest Service

REGION 1
NORTHERN REGION

PROJECT NAME
ASHLEY LAKE NORTH CAMPGROUND RENOVATION
FLATHEAD NATIONAL FOREST
TALLY LAKE RANGER DISTRICT

DRAWING TITLE
GUIDE SIGN PLACMENT LOCATIONS

DATE	DESIGNER	CHECKED	DWG SHEET NO.	SHEET
05/20/2026	CL3	C. STEEN	29	29 OF 40

NO.	REVISION DESCRIPTION	BY	DATE
△			
△			
△			

Sign Details

LOCATION (AS STAKED)	TYPE	SIGN DESCRIPTION	SIZE	MATERIAL	MESSAGE	QTY	POSTS TREATED SQUARE (4")	STEEL TUBE SQUARE (4")	1/2" LAG BOLTS W/ WASHERS	DESCRIPTION OF WORK
5 MAP - A	Guide Sign	FRD-3-4	24" x 69"	Aluminum	<- Ashley Lk North CG 5 <- Ashley Lk Boat 5 1/2 Launch	1	2	2	6	Remove existing posts and install sign, steel tube, and posts approx. 120' from North Ashley Lake Rd & Ashley Lake Rd Intersection.
6 MAP - A	Guide Sign	FRD-3-2	--	Aluminum	Ashley Lk North CG 5.5 Ashley Lk Boat 5.5 ←	1	--	--	--	Remove and dispose of sign and 2 posts.
7 MAP - A	Guide Sign	FRD-1-4	10" x 50"	Aluminum	US Hwy 2 7 1/2 ->	1	2	2	6	Install sign, steel tube, and posts approx. 120' from Ashley Lake Rd Intersection.
8 MAP - B	Guide Sign	FRD-2-4	17" x 48"	Aluminum	<- Ashley 4 Peak TRHD	1	1	1	3	Install sign, steel tube, and post approx. 100' from Fish Creek Intersection.
8 MAP - B	Route Marker	FM1-7H-21	8" x 21"	Aluminum	<- 10236	1	--	--	2	Install sign below guide sign on post.
9 MAP - B	Route Marker	FM1-7H-21	8" x 21"	Aluminum	10236	1	1	1	3	Remove & replace existing route marker and install sign, steel tube, and post approx. 100' from Fish Creek Intersection.
10 MAP - B	Guide Sign	FRD-2-4	17" x 48"	Aluminum	Ashley 4 -> Peak TRHD	1	1	1	3	Install sign, steel tube, and post approx. 100' from Fish Creek Intersection.
10 MAP - B	Route Marker	FM1-7H-21	8" x 21"	Aluminum	10236 ->	1	--	--	2	Install sign below guide sign on post.
11 MAP - C	Guide Sign	FRD-4-4	32" x 62"	Aluminum	Ashley Lk Boat 1/2 ^ Launch US Hwy 2 12 1/2 Ashley Lk North CG ->	1	2	2	6	Install sign, steel tube, and posts approx. 150' from Ashley Lake North CG Intersection.
11 MAP - C	Route Marker	FM1-7H-21	8" x 21"	Aluminum	11296 ->	1	--	--	2	Install sign below guide sign on right post.
12 MAP - C	Guide Sign	FRD-3-4	24" x 61"	Aluminum	<- US Hwy 2 12 1/2 -> Ashley Lk Boat 1/2 -> Launch	1	2	2	6	Install sign, steel tube, and posts across from Ashley Lake North CG Intersection.
13 MAP - C	Guide Sign	FRD-2-4	17" x 67"	Aluminum	^ US Hwy 2 12 1/2 <- Ashley Lake North CG	1	2	2	6	Install sign, steel tube, and posts approx. 150' from Ashley Lake North CG Intersection.
13 MAP - C	Route Marker	FM1-7H-21	8" x 21"	Aluminum	<- 11296	1	--	--	2	Install sign below guide sign on left post.

9/28/18 07:07 MARKL F:_CAD STANDARDS\AGENCY STANDARDS\FOREST SERVICE\NFS-CTB.DWG;

LOCATION (AS STAKED)	TYPE	SIGN DESCRIPTION	SIZE	MATERIAL	MESSAGE	QTY	POSTS TREATED SQUARE (4")	STEEL TUBE SQUARE (4")	1/2" LAG BOLTS W/ WASHERS	DESCRIPTION OF WORK
14 MAP - C	Route Marker	FM1-7H-21	8" x 21"	Aluminum	11296	1	1	1	3	Install sign, steel tube, and post approx. 50' into Ashley Lake North CG .
15 MAP - D	Guide Sign	FRD-3-4	24" X 56"	Aluminum	^ US Hwy 2 12 Ashley Lk Boat Launch ->	1	2	2	6	Install sign, steel tube, and posts approx. 150' from Ashley Lake Boat Launch approach.
15 MAP - D	Route Marker	FM1-7H-21	8" x 21"	Aluminum	11298 ->	1	--	--	2	Install sign below guide sign on right post
16 MAP - D	Guide Sign	FRD-3-4	24" x 48"	Aluminum	<- Ashley Lk North CG 1/2 US Hwy 2 12 ->	1	1	1	3	Install sign, steel tube, and post across from Ashley Lake Boat Launch Intersection.
17 MAP - D	Guide Sign	FRD-4-4	32" x 71"	Aluminum	Ashley Lk North CG 1/2 ^ US Hwy 2 13 <- Ashley Lk Boat Launch	1	2	2	6	Install sign, steel tube, and posts approx. 150' from Ashley Lake Boat Launch approach.
17 MAP - D	Route Marker	FM1-7H-21	8" x 21"	Aluminum	<- 11298	1	--	--	2	Install sign below guide sign on left post
18 MAP - E	Guide Sign	FRD-4-4	32" x 69"	Aluminum	^ US Hwy 2 7 1/2 Ashley Lk Boat Launch 4 1/2 <- Ashley Lk North CG 5	1	2	2	6	Install sign, steel tube, and posts approx. 150' from North Ashley Lake Rd intersection
19 MAP - E	Guide Sign	FRD-1-4	10" x 50"	Aluminum	<- US Hwy 2 7 1/2	1	2	2	6	Install sign, steel tube, and posts across from North Ashley Lake Rd intersection.
20 MAP - E	Guide Sign	FRD-3-4	24" x 69"	Aluminum	Ashley Lk Boat Launch 4 1/2 ->\ Ashley Lk North CG 5 ->	1	2	2	6	Install sign, steel tube, and posts approx. 150' from North Ashley Lake Rd intersection.
Campground	Regulatory Sign	R1-1	30"	Aluminum	Stop Sign	1	1	1	2	Install sign, steel tube, and post on left side of road 11298.

9/28/18 07:07 MARKL F:_CAD STANDARDS\AGENCY STANDARDS\FOREST SERVICE\NFS-CTB.DWG;

United States Department of Agriculture
Forest Service

REGION 1
NORTHERN REGION

PROJECT NAME
ASHLEY LAKE NORTH CAMPGROUND RENOVATION
FLATHEAD NATIONAL FOREST
TALLY LAKE RANGER DISTRICT

DRAWING TITLE
SIGN PLAN DETAILS (2)

DATE	DESIGNER	CHECKED
05/20/2026	CL3	C. STEEN

NO.	REVISION DESCRIPTION	BY	DATE
1			
2			
3			

DWG SHEET NO. **31**

SHEET **31** OF **40**

LOCATION (AS STAKED)	TYPE	SIGN DESCRIPTION	SIZE	MATERIAL	MESSAGE	QTY	POSTS TREATED ROUND (4")	STEEL TUBE SQUARE (4")	1/2" LAG BOLTS W/ WASHERS	DESCRIPTION OF WORK
Campground	Guide Sign	FRD-2-4	17" x 35"	Aluminum	CAMPING -> <- PARKING	1	1	--	2	Install sign and post across from first intersection after entering campground.
Campground	Host Sign	Symbol	12" x 18"	Aluminum		1	1	--	2	Install sign and post at host site.
Campground	Guide Sign	FDR-2-4	17" x 42"	Aluminum	^ UNITS 10 - 12 UNITS 8 - 9 ->	1	1	--	2	Install sign and post on right side of road prior to loop road in campground
Campground	Directional	R6-2R White on Brown	18" x 24"	Aluminum		1	1	--	2	Install sign and post across from loop road in campground
Campground	Directional	R4-7A White on Brown	18" x 24"	Aluminum		1	1	--	2	Install sign and post while exiting loop road in campground
Campground	Directional	R4-8A White on Brown	18" x 24"	Aluminum		1	1	--	2	Install sign and post while entering loop road in campground
Campground	Guide Sign	FDR-2-4 White on Brown	17" x 22"	Aluminum	DO NOT ENTER	1	1	--	2	Install sign and post prior to the parking lot on left side of road in campground.
					TOTALS:	38	41	34	135	
					(sign size & post type/length varies)					

NOTES:

***Signs are government furnished. Contractor responsible for posts, hardware, square steel tube and concrete.**

****Utilities may be present. Contractor is responsible for requesting a utility locate prior to any ground disturbing activity.**

*****Refer to Sign Placement typical for installation guidance**

9/28/18 07:07 MARKL F:_CAD STANDARDS\AGENCY STANDARDS\FOREST SERVICE\NFS-CTB.DWG;

United States Department of Agriculture
Forest Service

REGION 1
NORTHERN REGION

PROJECT NAME
ASHLEY LAKE NORTH CAMPGROUND RENOVATION
FLATHEAD NATIONAL FOREST
TALLY LAKE RANGER DISTRICT

DRAWING TITLE
SIGN PLAN DETAILS (3)

DATE	DESIGNER	CHECKED
05/20/2026	CL3	C. STEEN

NO.	REVISION DESCRIPTION	BY	DATE
△			
△			
△			

DWG SHEET NO. **32**

SHEET **32** OF **40**

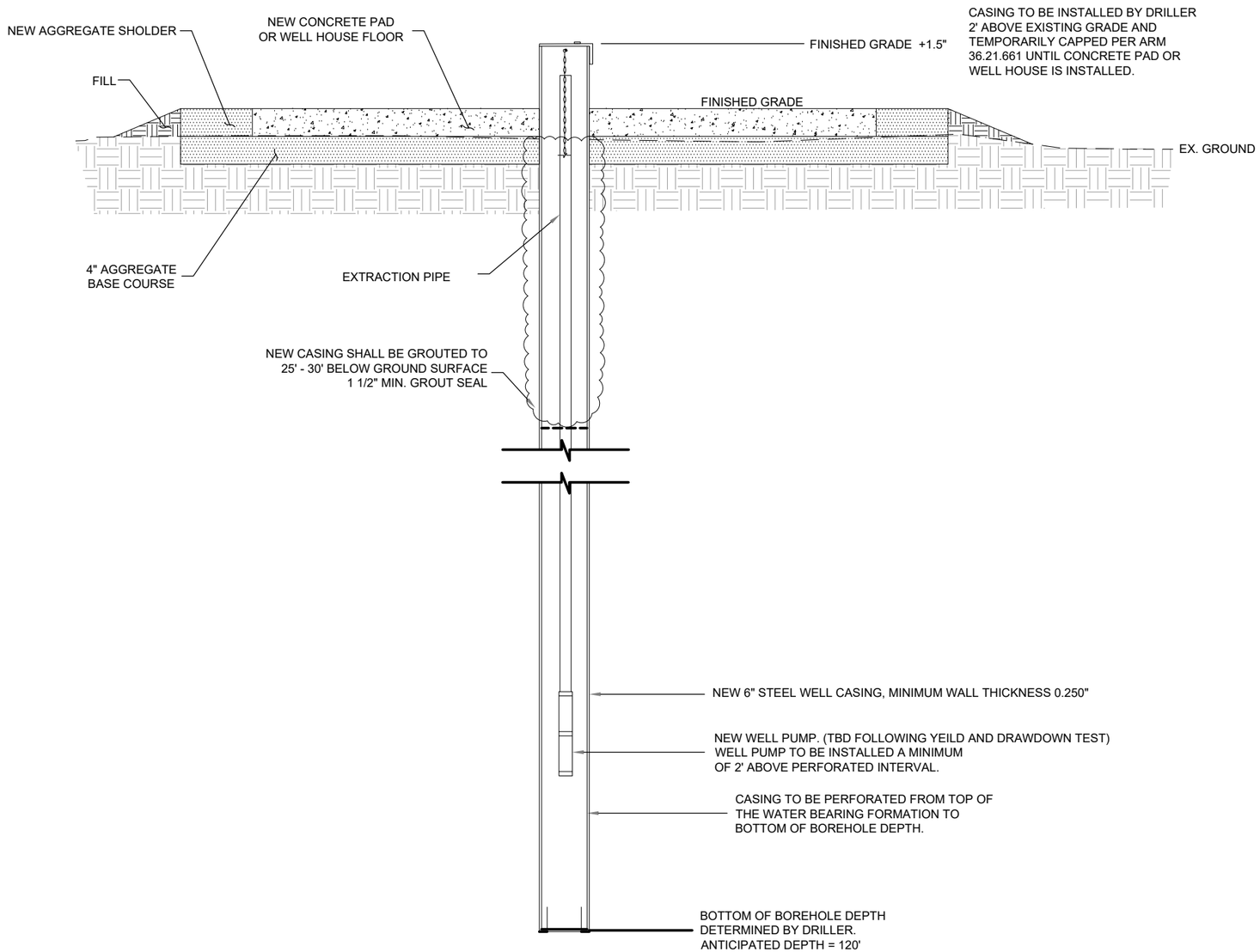

WELL DETAIL
NOT TO SCALE

WELL NOTES:

1. CONTRACTOR SHALL CONSTRUCT WELL TO MONTANA DEPARTMENT OF ENVIRONMENTAL QUALITY (MT DEQ) AND INDUSTRY STANDARDS FOR WATER WELLS.

United States Department of Agriculture
Forest Service

REGION 1
NORTHERN REGION

PROJECT NAME
ASHLEY LAKE NORTH CAMPGROUND RENOVATION
FLATHEAD NATIONAL FOREST
TALLY LAKE RANGER DISTRICT

DRAWING TITLE
WELL DETAIL OPTION ITEM 1

DATE	DESIGNER	CHECKED	DWG SHEET NO.	SHEET
05/20/2026	CL3	C. STEEN	33	33 OF 40

NO.	REVISION DESCRIPTION	BY	DATE

9/28/18 07:07 MARKL F:_CAD STANDARDS\AGENCY STANDARDS\FOREST SERVICE\NFS-CTB.DWG;

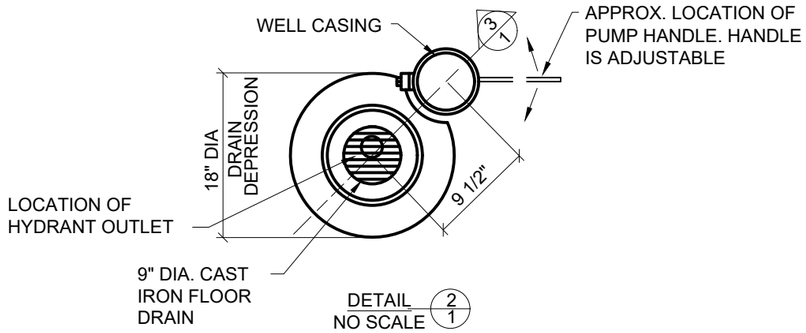

DETAIL 2/1
NO SCALE

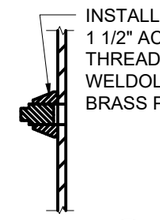

DETAIL 1/1
NO SCALE

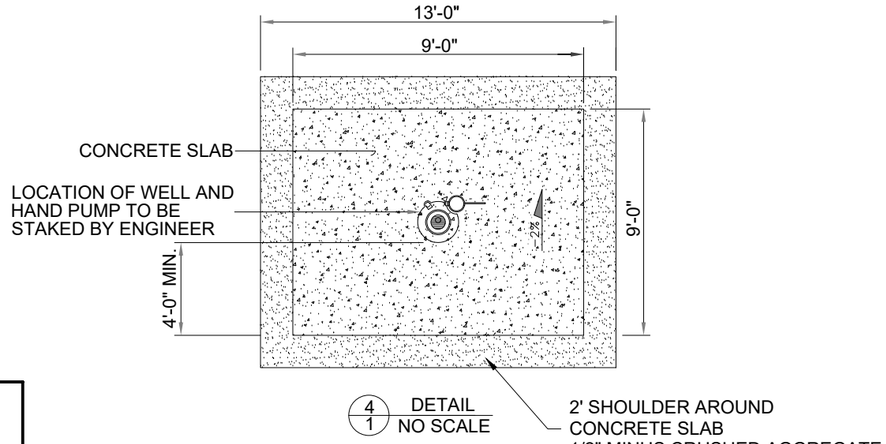

4/1 DETAIL
NO SCALE

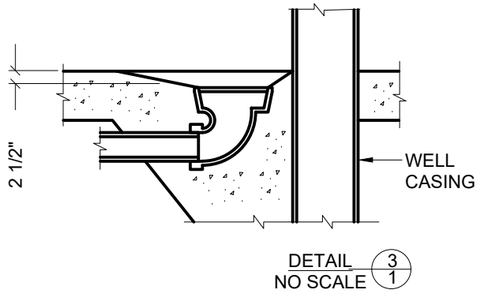

DETAIL 3/1
NO SCALE

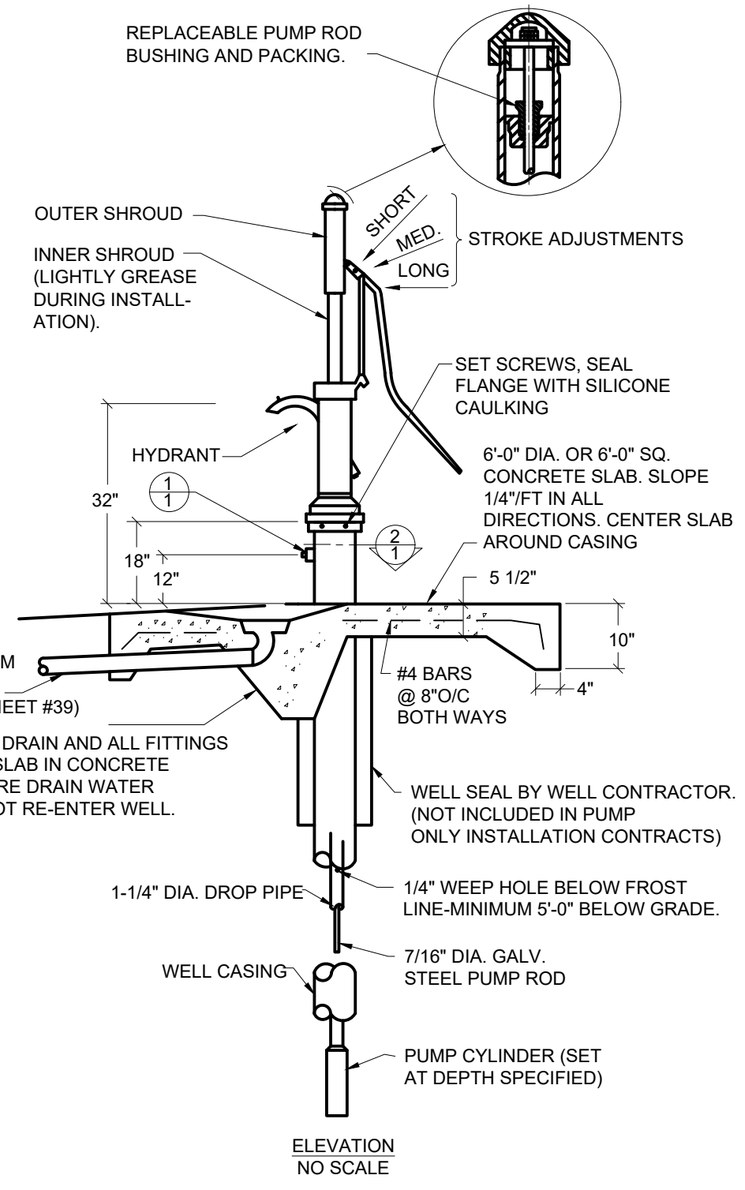

ELEVATION
NO SCALE

NOTES:

INSTALL MONITOR HAND PUMP MODEL 11HDS WITH SANITARY SHROUD AND SYPHON SPOUT.

INSTALL MONITOR 3" CYLINDER.

HAND PUMP, DROP PIPE, PUMP ROD AND CYLINDER AVAILABLE FROM BAKER MANUFACTURING
1-800-523-0224

HAND PUMP AND SLAB

NO SCALE

9/28/18 07:07 MARKL F:_CAD STANDARDS\AGENCY STANDARDS\FOREST SERVICE\NFS-CTB.DWG;

United States Department of Agriculture
Forest Service

REGION 1
NORTHERN REGION

PROJECT NAME
ASHLEY LAKE NORTH CAMPGROUND RENOVATION
FLATHEAD NATIONAL FOREST
TALLY LAKE RANGER DISTRICT

DRAWING TITLE
HAND PUMP DETAIL
OPTIOIN ITEM 2

DATE	DESIGNER	CHECKED	DWG SHEET NO.	SHEET
05/20/2026	CL3	C. STEEN	34	34 OF 40

NO.	REVISION DESCRIPTION	BY	DATE
1			
2			
3			

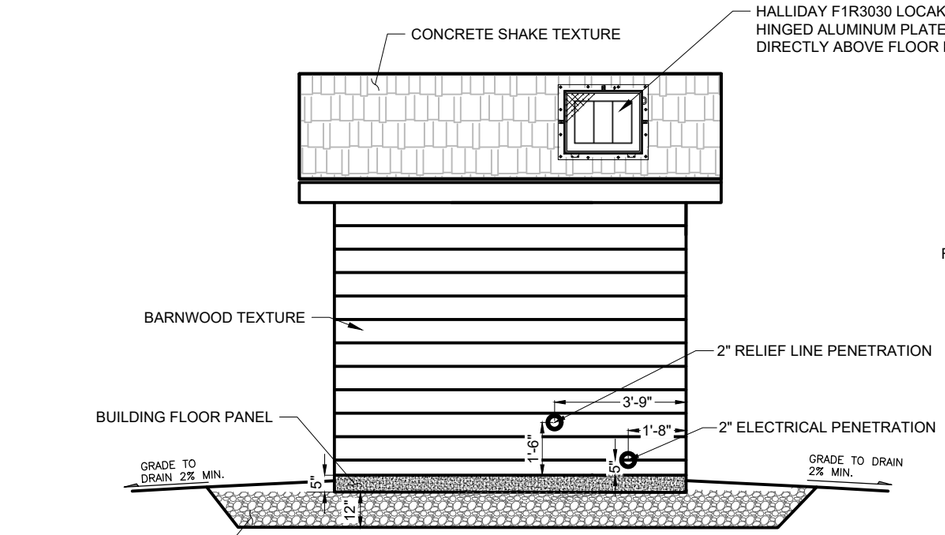

LEFT ELEVATION VIEW
NOT TO SCALE

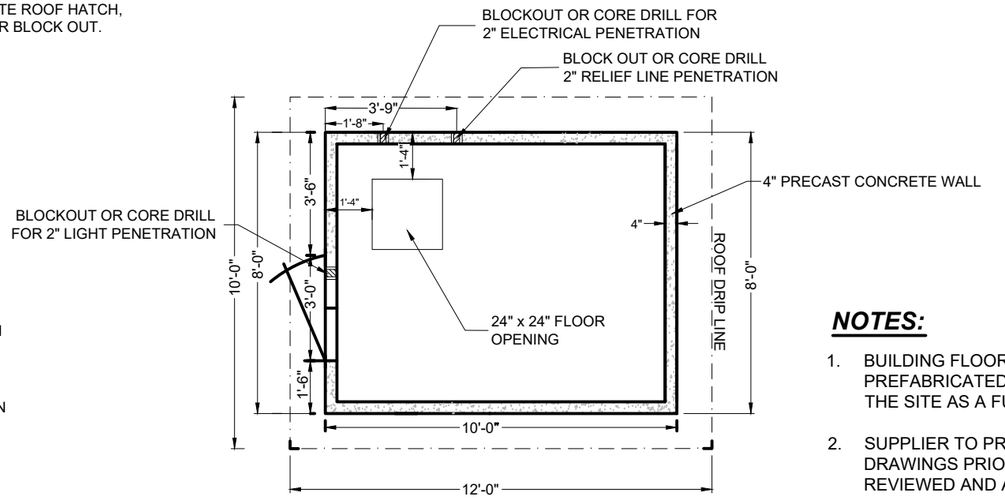

FLOOR PLAN
NOT TO SCALE

NOTES:

1. BUILDING FLOOR, WALLS AND ROOF TO BE PREFABRICATED AT SUPPLIER'S SITE AND SHIPPED TO THE SITE AS A FULLY CONSTRUCTED UNIT.
2. SUPPLIER TO PROVIDE CALCULATIONS AND SHOP DRAWINGS PRIOR TO FABRICATION THAT ARE TO BE REVIEWED AND ACCEPTED BY THE FOREST SERVICE.
3. BUILDING EXTERIOR ROOF FINISH SHALL BE TEXTURED WOOD SHAKE, WALL FINISH SHALL BE "BARNWOOD" HORIZONTAL SIDING, AND THE COLOR DARK BROWN. WALL AND ROOF COLORS SHALL BE INTEGRAL TO THE CONCRETE. EXTERIOR TEXTURE FOR ROOF AND WALLS TO BE APPROVED BY FOREST SERVICE PRIOR TO ORDERING BUILDING.
4. BUILDING INTERIOR WALLS AND CEILING SHALL BE PAINTED WHITE. FLOOR SHALL BE PAINTED LIGHT GRAY.
5. PREPARATION OF BUILDING PAD SHALL CONSIST OF CLEARING THE SITE AREA OF ALL VEGETATION, ROOTS, SURFACE DEBRIS, AND OTHER ORGANIC MATERIAL. NATIVE SUBGRADE SHALL BE BE COMPACTED AS SPECIFIED IN THE PROJECT SPECIFICATIONS. PLACE 12" OF 3/4" MINUS CRUSHED BASE COURSE, COMPACTED AS REQUIRED IN SECTION 02304. SURFACE OF FILL SHALL BE SMOOTH AND LEVEL SO THAT BUILDING FLOOR PANEL IS UNIFORMLY SUPPORTED. FINAL FILL SUBGRADE IS TO BE INSPECTED AND APPROVED BY THE C.O.R PRIOR TO BUILDING PLACEMENT.
6. BUILDING SITE SHALL BE GRADE TO PROVIDE POSITIVE DRAINAGE AWAY FROM BUILDING.

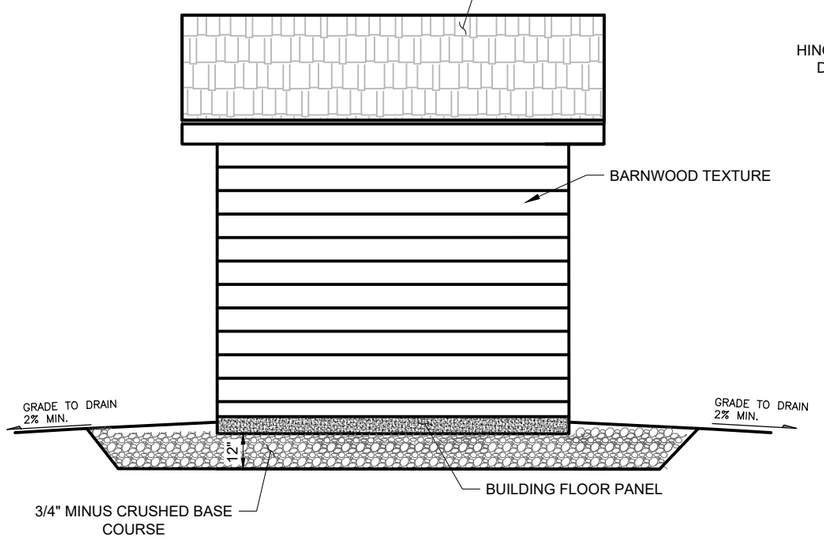

RIGHT ELEVATION VIEW
NOT TO SCALE

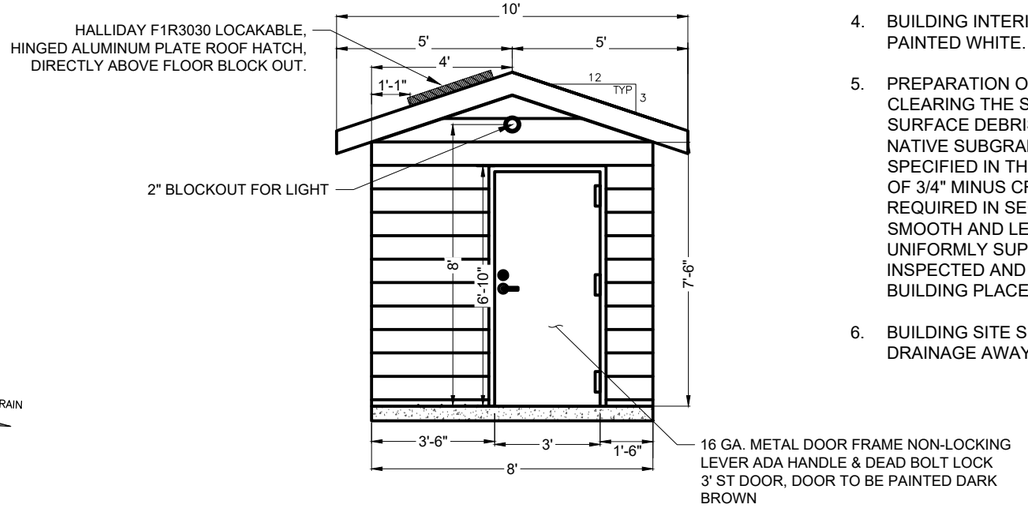

TYPICAL END ELEVATION VIEW
NOT TO SCALE

9/28/18 07:07 MARKL F:_CAD STANDARDS\AGENCY STANDARDS\FOREST SERVICE\NFS-CTB.DWG;

United States Department of Agriculture
Forest Service

REGION 1
NORTHERN REGION

PROJECT NAME
ASHLEY LAKE NORTH CAMPGROUND RENOVATION
FLATHEAD NATIONAL FOREST
TALLY LAKE RANGER DISTRICT

DRAWING TITLE
CONCRETE PUMPHOUSE OPTION ITEM 3

DATE	DESIGNER	CHECKED	DWG SHEET NO.	SHEET
05/20/2026	CL3	C. STEEN	35	35 OF 40

NO.	REVISION DESCRIPTION	BY	DATE
1			
2			
3			

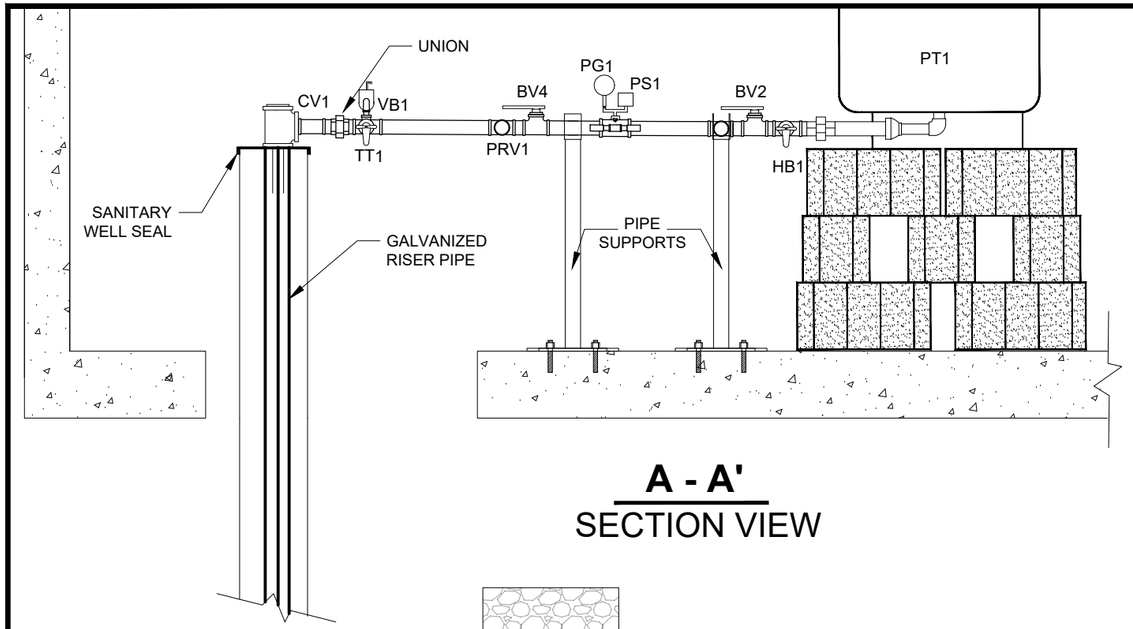

A - A'
SECTION VIEW

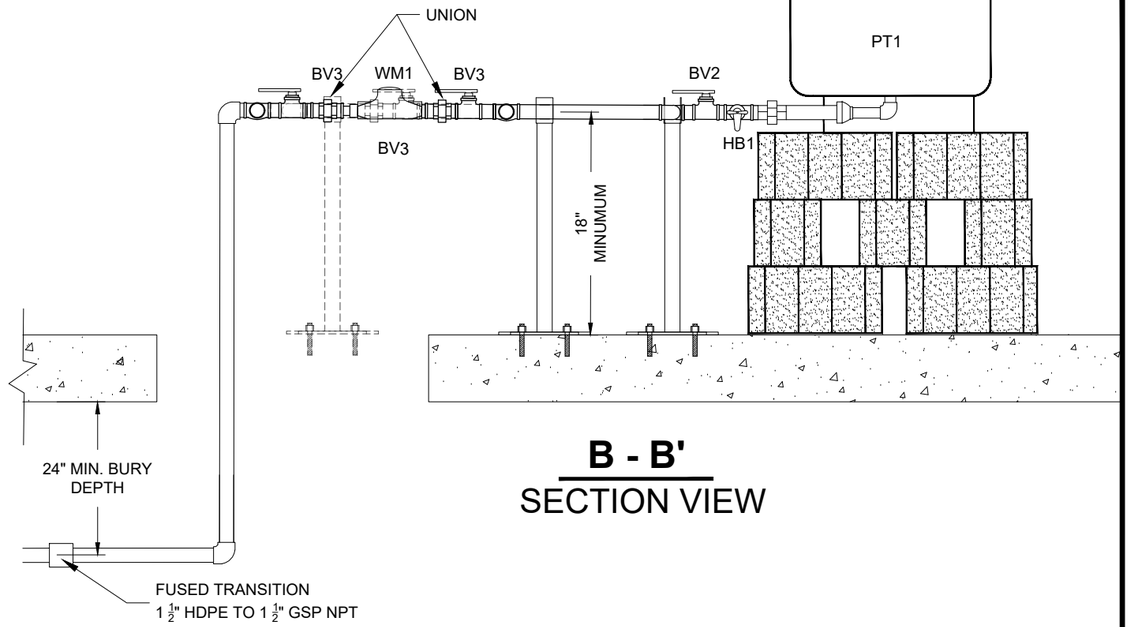

B - B'
SECTION VIEW

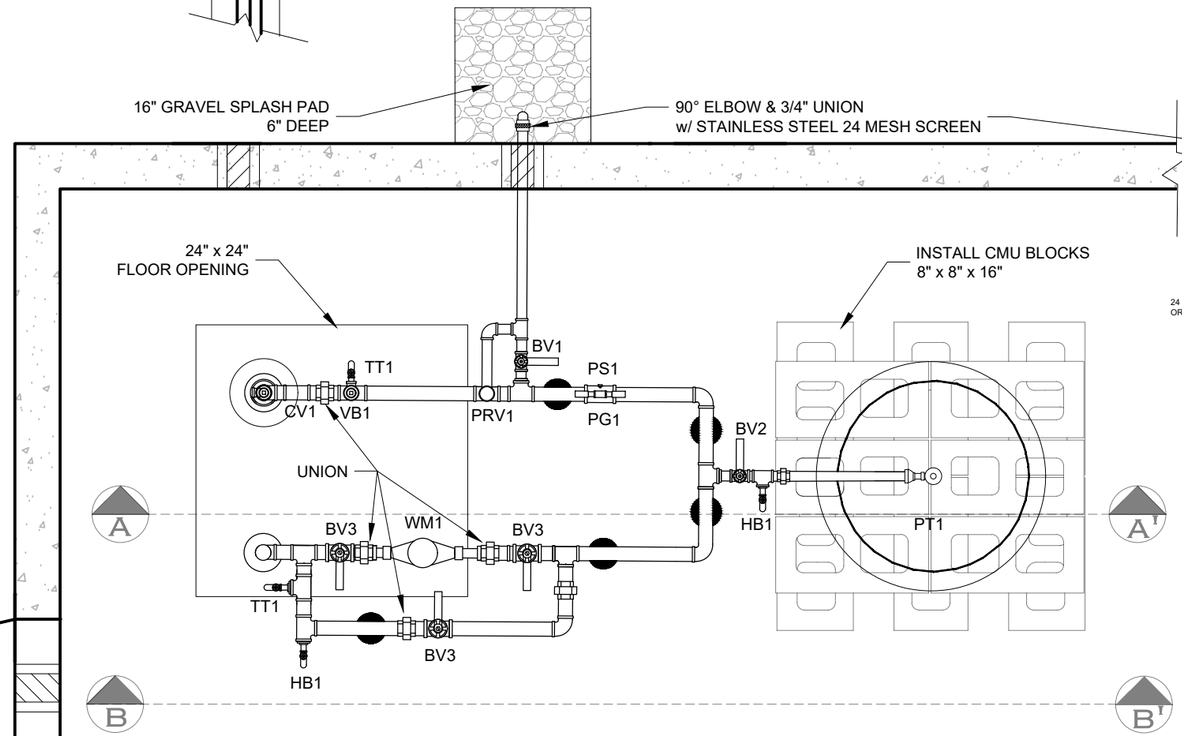

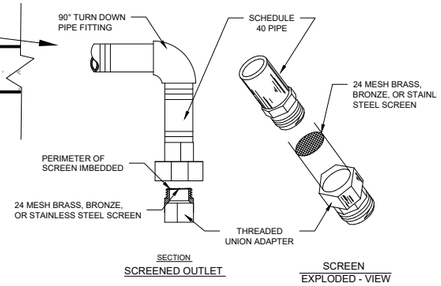

EQUIPMENT SCHEDULE

MARK	DESCRIPTION	REMARKS
CV1	CHECK VALVE	FLOMATIC SERIES 4033E, 1-1/2 IN.
VB1	AIR / VACUUM RELIEF VALVE	APCO, 143C (SEE DETAIL)
TT1	SMOOTH TEST TAP	MATCO-NORCA, MODEL FY-691LF
PRV1	PRESSURE RELIEF VALVE	MERRILL PRVNL757100
BV1	3/4-IN. BRASS BALL VALVE	APOLLO 77FLF-104 BALL VALVE
PG1	PRESSURE GUAGE	WINTERS, MODEL PFQ804LF (Liquid-Filled)
PS1	PRESSURE SWITCH	SQUARE D 9013FSG SERIES
BV2	1-IN. BRASS BALL VALVE	APOLLO 77FLF-105 BALL VALVE
HB1	3/4 IN. HOSE BIB	DOMESTIC, 12" CLR. TO FLOOR
WM1	WATER METER	HERSEY, MODEL MVR 50
BV3	1 1/2-IN. BRASS BALL VALVE	APOLLO 77FLF-107 BALL VALVE
PT1	HYDRO-PNEUMATIC TANK	WELL-X-TROL, WX-255

GENERAL NOTES

.

1. INSTALLATION OF THE PUMPHOUSE AND ASSOCIATED PLUMBING IS INCLUDED IN OPTION ITEM 3, "INSTALL PUMPHOUSE AND WATER SYSTEM".
2. ABOVE THE FLOOR & INSIDE THE PUMPHOUSE BUILDING WATER PIPE AND FITTINGS SHALL BE 1 $\frac{1}{2}$" GALVANIZED STEEL PIPE UNLESS NOTED OTHERWISE.
3. BELOW GROUND PIPELINES AND VALVES SHALL BE 1 $\frac{1}{2}$" HDPE AND 1 $\frac{1}{2}$" "*POLYVALVES*" OR EQUAL.
4. SUPPORT PIPE WHERE SHOWN AND WHERE NEEDED.
5. EXTEND LINE FROM PRESSURE RELIEF VALVE THROUGH BLOCK OUT IN PUMPHOUSE WALL. INSTALL 45° ELBOW AND 3" SCREENED PIPE ON END, POINTING DOWNWARD.
6. FILL ANNULAR SPACE FROM BLOCK OUTS WITH CAULKING AND COLOR TO MATCH BUILDING INTERIOR AND EXTERIOR.

9/28/18 07:07 MARKL F:_CAD STANDARDS\AGENCY STANDARDS\FOREST SERVICE\NFS-CTB.DWG;

United States Department of Agriculture
Forest Service

REGION 1
NORTHERN REGION

PROJECT NAME
ASHLEY LAKE NORTH CAMPGROUND RENOVATION
FLATHEAD NATIONAL FOREST
TALLY LAKE RANGER DISTRICT

DRAWING TITLE
WELL HOUSE PIPING DETAILS OPTION ITEM 3

DATE	DESIGNER	CHECKED	DWG SHEET NO.	SHEET
05/20/2026	CL3	C. STEEN	36	36 OF 40

NO.	REVISION DESCRIPTION	BY	DATE

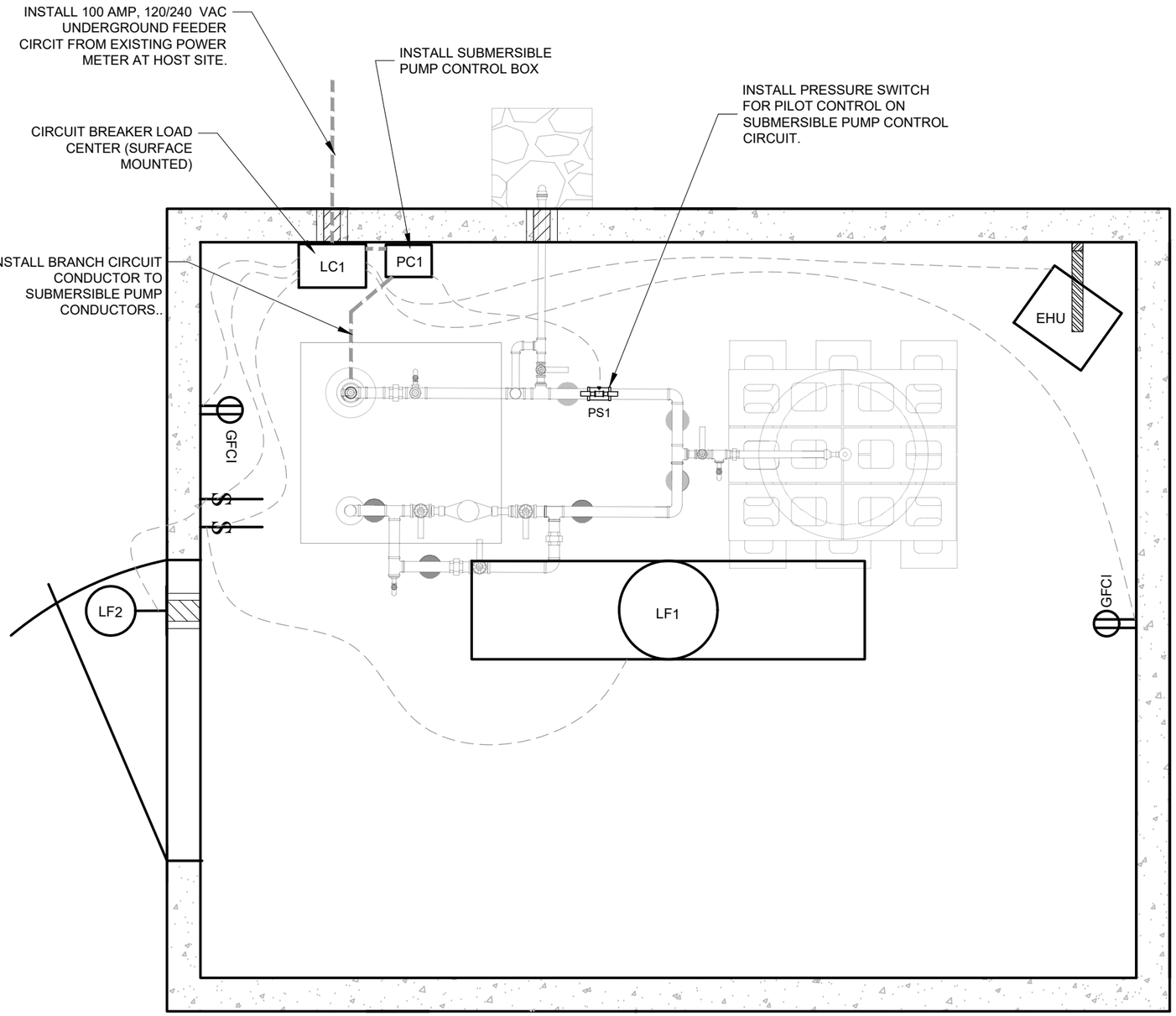

EQUIPMENT SCHEDULE		
MARK	DESCRIPTION	REMARKS
PS1	PRESSURE SWITCH	SQUARE D 9013FSG SERIES
LC1	LOAD CENTER	SQUARE D QO612L100RB
PC1	PUMP CONTROL BOX	FRANKLIN-ELECTRIC 282 300 8110
EHU	ELECTRIC HEATER UNIT	QMARK MODEL WHT500
GFCI	ELECTRICAL OUTLET	GROUND FAULT CIRCUIT INTERRUPTER
LF1	CEILING MOUNTED LIGHT FIXTURE	LITHONIA FEM L48, 6000LM, LPPCL, MD, MVOLT, GZ10, 35K, 80 CRI
LF2	EXTERIOR MOUNTED LIGHT FUXTURE	LITHONIA TRW-1, LED, ALO, SWW2, UVOLT, PE, DDBTXD

GENERAL NOTES

1. ALL ELECTRICAL WORK SHALL BE COMPLETED BY A LICENSED ELECTRICIAN AND CONFORM TO THE NEC AND LOCAL REGULATIONS. ALL WORK SHALL BE DONE IN A NEAT, SAFE, AND WORKMANLIKE MANNER.

2. ELECTRIC SERVICE TO WELLHEAD IS DIRECT BURIAL WITH NEW FEEDER WIRE TO THE BUILDING. INSIDE THE BUILDING PROVIDE 1-INCH PVC CONDUIT TROUGH THE BUILDING BLOCKOUT TO THE SERVICE PANEL.

3. ALL CONDUCTORS RUN INSIDE OF THE BUILDING SHALL BE INSTALLED IN EMT OR WATER PROOF FLEXIBLE CONDUIT ATTACHED TO THE WALL OR CEILING UNLESS NOTED OTHERWISE.
4. CONTRACTOR SHALL PROVIDE THE ITEMS LISTED IN THE EQUIPMENT SCHEDULE.

5. ALL MATERIALS SHALL BE NEW AND OF THE BEST QUALITY, MANUFACTURED IN ACCORDANCE WITH NEMA, ANSI, U.L., OR OTHER APPLICABLE STANDARDS. THE USE OF MANUFACTURERS NAMES, MODELS, AND NUMBERS IS INTENDED TO ESTABLISH STYLE, QUALITY, APPEARANCE, AND USEFULNESS. PROPOSED SUBSTITUTIONS SHALL BE SUBMITTED DURING THE SUBMITTAL PROCESS IN WRITING AND REVIEWED BY THE ENGINEER PRIOR TO ORDERING THE EQUIPMENT.

6. FILL ANNULAR SPACE FROM BLOCK OUTS WITH CAULKING AND COLOR TO MATCH BUILDING INTERIOR AND EXTERIOR. PRIME AND PAINT ALL STRUCTURAL SURFACES THAT HAVE BEEN DRILLED OR WELDED.

7. LEAVE THE SITE CLEAN. REMOVE ALL DEBRIS, EMPTY CARTONS, TOOLS, CONDUIT, WIRE SCRAPS, AND ALL MISCELLANEOUS SPARE EQUIPMENT AND MATERIALS USED IN THE WORK DURING CONSTRUCTION. ALL COMPONENTS SHALL BE FREE OF DUST, GRIT AND FOREIGN MATERIALS BEFORE THE WORK IS ACCEPTED AS FINAL.

9/28/18 07:07 MARKL F:\ CAD STANDARDS\AGENCY STANDARDS\FOREST SERVICE\NFS-CTB.DWG;

United States Department of Agriculture
Forest Service

REGION 1
NORTHERN REGION

PROJECT NAME
ASHLEY LAKE NORTH CAMPGROUND RENOVATION
FLATHEAD NATIONAL FOREST
TALLY LAKE RANGER DISTRICT

DRAWING TITLE
WELL HOUSE ELECTRICAL DETAILS OPTION ITEM 3

DATE	DESIGNER	CHECKED	DWG SHEET NO.	SHEET
05/20/2026	CL3	C. STEEN	37	37 OF 40

NO.	REVISION DESCRIPTION	BY	DATE
△			
△			
△			

ASHLEY LAKE NORTH CAMPGROUND

SITE MAP SYMBOLS

- W — WATER LINE.
- H — WATER HYDRANT
- V — VALVE BOX
- D — DRAIN VAULT
- W — WELL & WELL HOUSE

RD. #912

100' WELL ISOLATION ZONE

EXISTING UNDERGROUND ELECTRIC LINE

ELEVATION 3498.5

INSTALL 4" x 24' SCHEDULE 40 PVC WATERLINE SLEEVE UNDER ROADBED.

99.2'

SLOPE -1%

ELEVATION 3499.4

63.0'

SLOPE -1%

ELEVATION 3498.5'

125.5'

SLOPE -1%

104.5'

ELEVATION 3497.7'

27.2'

SLOPE -1%

86.0'

ELEVATION 3498.7'

INSTALL 4" x 24' SCHEDULE 40 PVC WATERLINE SLEEVE UNDER ROADBED.

ELEVATION 3497.3'

INSTALL 4" x 24' SCHEDULE 40 PVC WATERLINE SLEEVE UNDER ROADBED.

SLOPE -1%

146.1'

ELEVATION 3486.5'

SLOPE -1%

82.1'

ELEVATION 3497.5'

ELEVATION 3497.1'

0' 20' 40' 60' 80' 120' 160'

SCALE = FEET

9/28/18 07:07 MARKL F:_CAD STANDARDS\AGENCY STANDARDS\FOREST SERVICE\NFS-CTB.DWG;

United States Department of Agriculture
Forest Service

REGION 1
NORTHERN REGION

PROJECT NAME
ASHLEY LAKE NORTH CAMPGROUND RENOVATION
FLATHEAD NATIONAL FOREST
TALLY LAKE RANGER DISTRICT

DRAWING TITLE
WATER LINE SITE PLAN OPTION ITEM 3

DATE	DESIGNER	CHECKED	DWG SHEET NO.	SHEET
05/20/2026	CL3	C. STEEN	38	38 OF 40

NO.	REVISION DESCRIPTION	BY	DATE
△			
△			
△			

VALVE BOX, DRAIN VAULT & UTILITY TRENCH

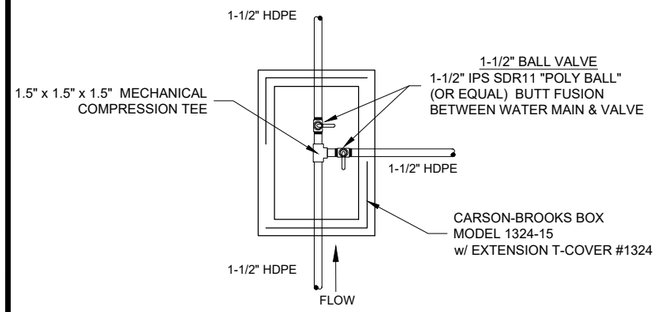

MAIN LINE TEE BOX
No Scale

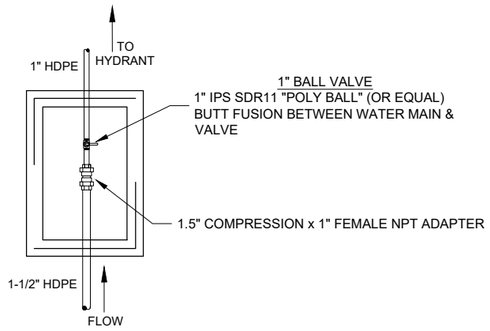

HYDRANT BOX
No Scale

TYPICALVALVE BOX DETAIL
NO SCALE

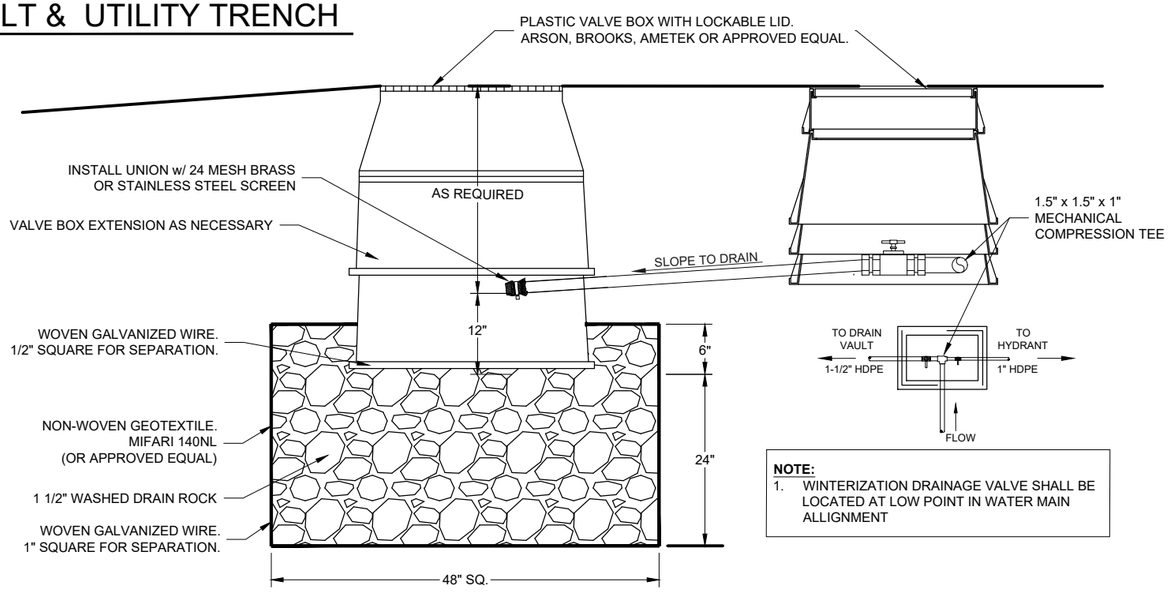

NOTE:
1. WINTERIZATION DRAINAGE VALVE SHALL BE LOCATED AT LOW POINT IN WATER MAIN ALLIGNMENT

WATER SYSTEM DRAIN VAULT DETAIL
NO SCALE

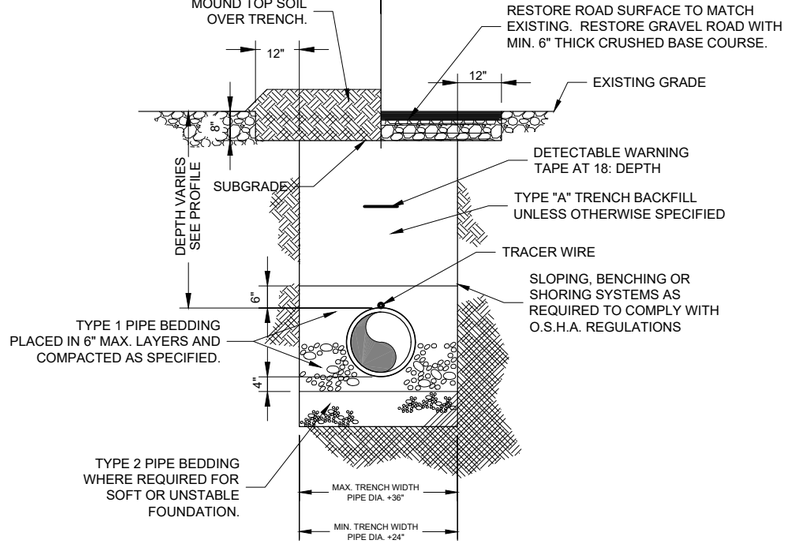

TYPICAL UTILITY TRENCH SECTION DETAIL
NO SCALE

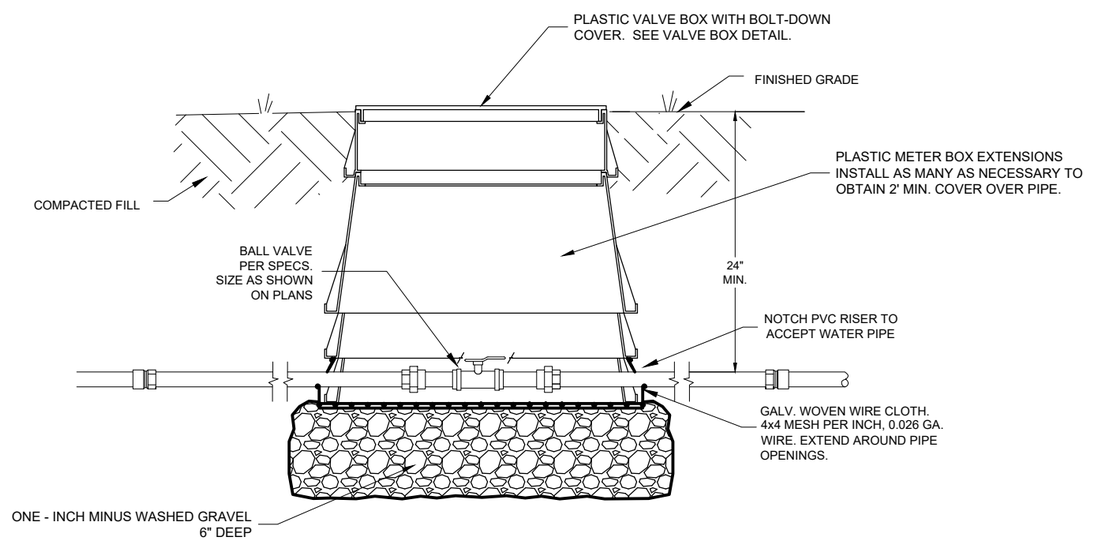

VALVE AND VALVE BOX INSTALLATION DETAIL
NO SCALE

9/28/18 07:07 MARKL F:_CAD STANDARDS\AGENCY STANDARDS\FOREST SERVICE\NFS-CTB.DWG;

United States Department of Agriculture
Forest Service

REGION 1
NORTHERN REGION

PROJECT NAME
ASHLEY LAKE NORTH CAMPGROUND RENOVATION
FLATHEAD NATIONAL FOREST
TALLY LAKE RANGER DISTRICT

DRAWING TITLE
VALVE BOX, DRAIN VAULT & UTILITY TRENCH DETAILS OPTION ITEM 3

DATE	DESIGNER	CHECKED	DWG SHEET NO.	SHEET
05/20/2026	CL3	C. STEEN	39	39 OF 40

NO.	REVISION DESCRIPTION	BY	DATE
1			
2			
3			

CAMPGROUND WATER HYDRANT WITH CONCRETE PAD

TYPICAL INSTALLATION DETAIL
NO SCALE

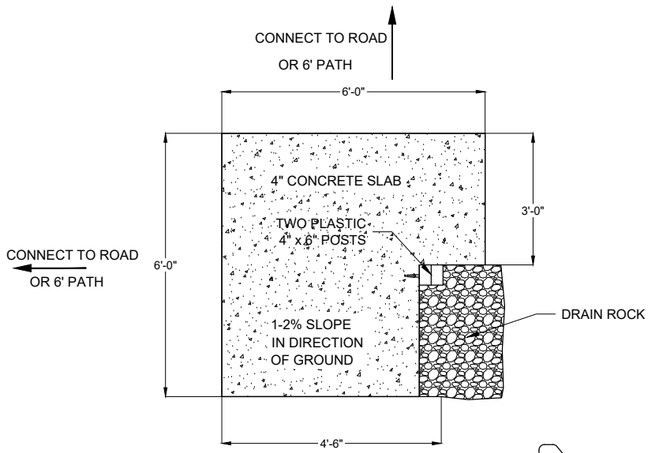

PLAN VIEW
No Scale

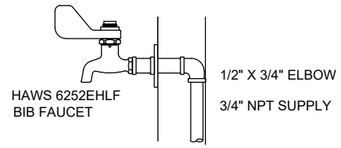

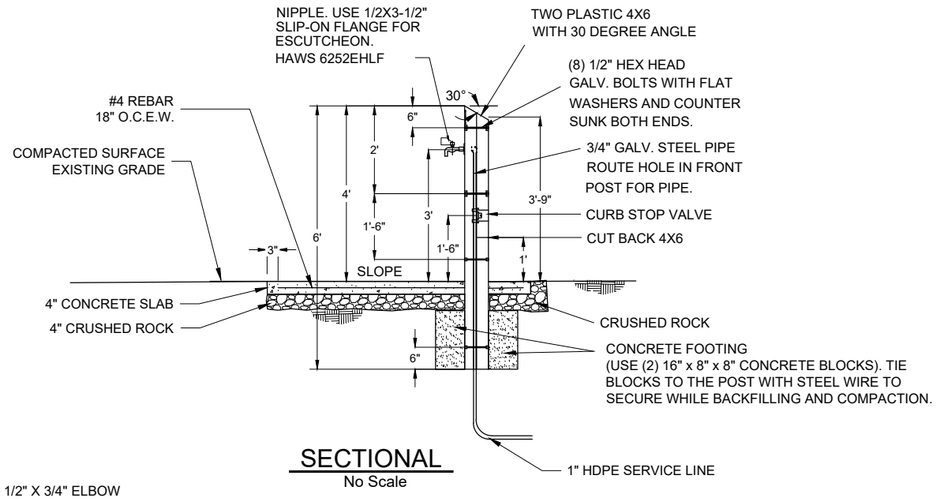

SECTIONAL
No Scale

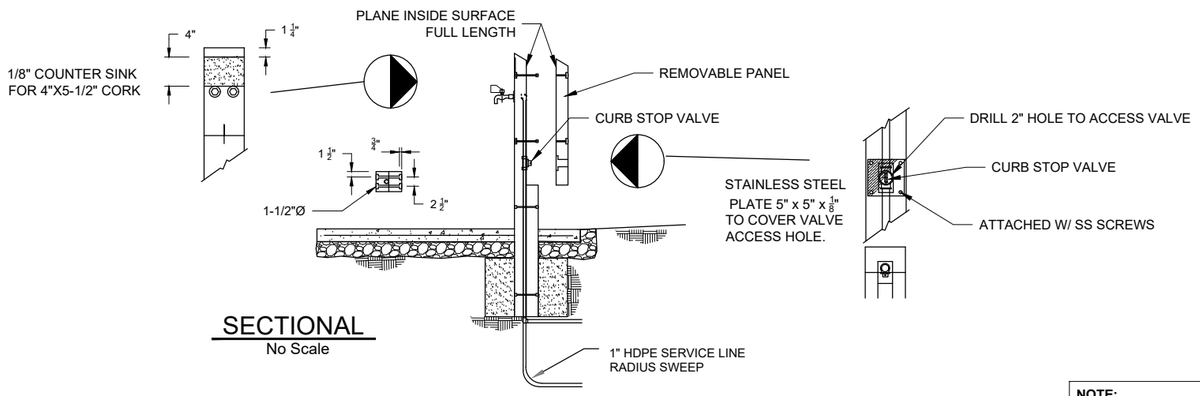

SECTIONAL
No Scale

NOTE:
1. WATER SERVICE TO CAMPGROUND HYDRANT SHALL NOT BE LOCATED UNDER THE CONCRETE SLAB. SERVICE SHALL APPROACH THE HYDRANT OUTSIDE OF EXTENTS OF CONCRETE AND SHALL BE LOCATED UNDER WASHED DRAIN ROCK TO RISER.

SEE SHEET 20 FOR HOST SITE WATER HYDRANT DETAIL

9/28/18 07:07 MARKL F:_CAD STANDARDS\AGENCY STANDARDS\FOREST SERVICE\NFS-CTB.DWG;

United States Department of Agriculture
Forest Service

REGION 1
NORTHERN REGION

PROJECT NAME
ASHLEY LAKE NORTH CAMPGROUND RENOVATION
FLATHEAD NATIONAL FOREST
TALLY LAKE RANGER DISTRICT

DRAWING TITLE
CAMPGROUND WATER HYDRANT DETAILS OPTION ITEM 3

DATE	DESIGNER	CHECKED	DWG SHEET NO.	SHEET
05/20/2026	CL3	C. STEEN	40	40 OF 40

NO.	REVISION DESCRIPTION	BY	DATE