GOLDEN GATE NATIONAL RECREATION AREA
PRESIDIO OF SAN FRANCISCO

Construct and Install Improvements to
West Bluff Trail/Arrival Area
GOGA
PMIS 244458

FORT POINT

Widen and Reconstruct Long Avenue
for Safer Multi-Modal Access
FOPO
PMIS 186401

DIVISION 01 SPECIFICATIONS

NATIONAL PARK SERVICE (NPS)
DENVER SERVICE CENTER (DSC)
July 2025

Table of Contents

		Number of Pages
Division 01:	**General Requirements**	
01 11 00	Summary of Work	5
01 26 01	Contract Modification Procedures	6
01 27 00	Definition of Contract Line Items	2
01 31 00	Project Management and Coordination	9
01 32 16	Construction Schedule	9
01 32 33	Photo Documentation	2
01 33 23	Submittal Procedures	8
01 33 23A	GOGA 244458 Submittal List	4
01 33 23B	FOPO 186401 Submittal List	2
01 34 00	Natural Habitat Requirements	4
01 35 13.22	Archeological Protection	3
01 35 23	Safety Requirements	5
01 35 40	Soils Management	6
01 35 50	Tree Preservation	2
01 40 00	Quality Requirements	8
01 40 00A	GOGA 244458 Statement of Structural Tests and Special Inspections	24
01 40 00B	FOPO 186401 Statement of Structural Tests and Special Inspections	21
01 40 00C	Accessibility Inspection Report	14
01 42 00	Reference Standards	12
01 50 00	Temporary Facilities and Controls	10
01 50 02	Trucking	2
01 57 19.12	Noise and Acoustics Management	3
01 57 23	Under-an-Acre Pollution Prevention	7
01 67 00	Product Requirements	9
01 73 40	Execution	7
01 74 19	Construction Waste Management and Disposal	7
01 74 19A	Project Waste Management Plan Worksheet Sample	1
01 77 00	Closeout Procedures	4
01 77 00A	GOGA 244458 Closeout and Operations & Maintenance Requirements	1
01 77 00B	FOPO 186401 Closeout and Operations & Maintenance Requirements	1

GOGA-244458 / FOPO-186401

SECTION 01 11 00 - SUMMARY OF WORK

PART 1 - GENERAL

1.1 SUMMARY

A. Section includes the following:

1. Work Covered by Contract Documents
2. Work Under Other Contracts
3. Government-Furnished Materials
4. Contractor Use of Site
5. Public Use of Site
6. Occupancy Requirements for Buildings
7. Conduct of Operations
8. Work Restrictions
9. Special Construction Requirements
10. Under-an-acre Pollution Prevention Plan
11. Soils Investigation Report
12. Additional Reports

1.2 WORK COVERED BY CONTRACT DOCUMENTS

A. Project Location: The project location is in the Golden Gate National Recreation Area (GGNRA) along Long Avenue and in a portion of Crissy Field within the Presidio of San Francisco Historic District. The project site includes the West Bluff Picnic Area parking lot and the Mason Street Marine Drive intersection (CLIN 1 / GOGA 244458); the plaza area formed at the Marine Drive and Long Avenue intersection (CLIN 2 / FOPO 186401); and Long Avenue to Lincoln Blvd. crosswalk (CLIN 3 / FOPO 186401).

B. The Work consists of:

1. Safety improvements for bicyclists and pedestrians on Long Avenue, at the intersection of Long Avenue and Marine Drive, and in the West Bluff parking area. A portion of Long Avenue will be widened to include a bike lane in the uphill (eastbound) direction and marked with a shared bicycle/vehicle lane in the downhill (westbound) direction. The plaza area at the intersection of Long Avenue and Marine Drive will be reconfigured to improve vehicle and bicycle movements, including a new access control gate configuration implemented at a new parking lot turnaround. A new bike path along the western edge of the West Bluff parking lot, extending from the Mason Street intersection to the Marine Drive intersection, will separate bicyclists from the vehicular parking lot and pedestrian areas. A vehicular turnaround at the north end of the parking lot will

provide for visitor drop off and improve vehicle circulation in the parking lot. Removal of an existing roundabout at the south end of the parking lot will improve vehicle flow.

2. A Construction Schedule laying out project start and completion dates along with scope tasks shall be submitted per Specification Section 01 32 16 “Construction Schedule”.

C. Project will be constructed under a single prime contract.

1.3 WORK UNDER OTHER CONTRACTS

A. None

1.4 CONSTRUCTION CONTRACTOR USE OF SITE

A. General: Contractor shall have limited use of site for construction operations. Limit use of premises to **work in areas** indicated on drawings. Do not disturb portions of Project site beyond areas in which the Work is indicated.

1. Limits: Confine construction operations to Long Avenue north of the existing crosswalk at Lincoln Blvd. and the northern end and western side of the West Bluff Picnic Area parking lot. Construction operations will occur and shall be coordinated near to the Mason Street and Marine Drive intersection.

B. Storage of Materials: Confine storage of materials to area within Long Avenue and the parking lot identified by NPS. Area identified for material storage shall be enclosed by contractor security fencing.

C. Parking: Confine parking to Long Avenue and the area identified by the NPS within the West Bluff parking lot.

D. Stockpiling: Confine stockpiling to area identified by the NPS within Long Avenue and the West Bluff parking lot.

E. Preservation of Natural Features:

1. Prevent damage to natural surroundings. Restore damaged areas, repairing or replacing damaged trees and plants, at no additional expense to the Government.
2. Provide temporary barriers to protect existing trees and plants and root zones.
3. Do not remove, injure, or destroy trees or other plants without prior approval. Consult with Contracting Officer (CO) and remove agreed-on roots and branches that interfere with construction.
4. Do not fasten ropes, cables, or guys to existing trees.
5. Carefully supervise excavating, grading, filling, and other construction operations near trees to prevent damage.
6. See Section 01 34 00 Natural Habitat Requirements for additional project requirements.

F. Driveways and Entrances: Keep driveways and entrances serving premises clear and available to Government employees, and emergency vehicles at all times. Do not use for parking or storage of materials.

1. Schedule deliveries to minimize use of driveways and entrances.
2. Schedule deliveries to minimize space and time requirements for storage of materials and equipment on-site.

G. Construction Camp: Establishment of a camp within park will not be permitted.

H. Hauling Restrictions: Comply with legal load restrictions in hauling of materials. Load restrictions on park roads are identical to state load restrictions with such additional regulations as may be imposed by the Park Superintendent. Information regarding rules and regulations for vehicular traffic on park roads may be obtained from the Office of the Park Superintendent. A special permit will not relieve Contractor of liability for damage which may result from moving of equipment. See Section 01 50 02 Trucking.

I. Utilities to support construction activities by Construction Contractor:
1. Water: Construction Contractor shall coordinate with Presidio Trust Utilities to confirm a source of water is available near to Long Avenue (415-561-4270). If a source of water is confirmed, it is assumed water use shall be metered and paid for by the Construction Contractor to Presidio Trust Utilities directly.

1.5 PUBLIC USE OF SITE

A. A portion of the West Bluff Picnic Area parking lot will be open to the public during construction.

B. Contractor shall conduct their operations to ensure the least inconvenience to public. Long Avenue will be approved to be closed between Lincoln Blvd. and the crosswalk at Marine Drive for the duration of the project. Parking lot drive lane reductions may be permitted, when required, upon specific approval of Contracting Officer for a maximum of 24 hours.

1.6 OCCUPANCY REQUIRMENTS FOR BUILIDINGS

1. Partial Government Occupancy: Government will occupy premises during entire construction period, with exception of areas under construction. Cooperate with Government during construction operations to minimize conflicts and facilitate Government usage. Perform Work so as not to interfere with Government's operations. Maintain existing exits, unless otherwise indicated.

   a. Maintain access to existing walkways, corridors, and other adjacent occupied or used facilities. Do not close or obstruct walkways, corridors, or other occupied or used facilities without written permission from Contracting Officer.

1.7 CONDUCT OF OPERATIONS

A. Contractor shall conduct their operations in conformance with rules and regulations promulgated by the Secretary of the Interior for the National Park Service, and applicable park rules and regulations prescribed by Park Superintendent.

B. Work on Saturdays, Sundays, Federal holidays or at night may not be performed unless stated in the Work Restrictions below or without prior consent from the Contracting Officer. Submit requests **3 business days** in advance of the work to the Contracting Officer for approval.

C. No signs or advertisements (except those specified herein) shall be displayed on the construction site or within the park unless approved by the Contracting Officer.

1.8 WORK RESTRICTIONS

A. On-Site Work Hours: Work shall be generally performed during normal business working hours of 7:00 a.m. to 5:30 p.m., Monday through Friday, except when otherwise indicated.

1. Weekend Hours: Work will be permitted in the evenings or on Saturdays or Sundays by prior authorization of the NPS Contractor Officer. Submit request 48 hours in advance of the work to the Contractor Officer for approval.
2. No onsite work shall be performed during federal holiday periods unless otherwise directed by the Contractor Officer.
3. Early Morning Hours: See section 01 57 19.12 Noise and Acoustic Management.
4. Hours for Core Drilling, or other noisy activity. See section 01 57 19.12 Noise and Acoustic Management.

B. Existing Utilities

1. Existing Utilities: Notify Contracting Officer and utility companies of proposed locations and times for excavation.
2. Contractor shall be responsible for locating and preventing damage to known utilities. If damage occurs, repair utility at no additional expense to the Government.
3. If damage occurs to an unknown utility, repair utility. An equitable adjustment will be made in accordance with the Changes clause of the contract.

C. Existing Utility Interruptions: Do not interrupt utilities serving facilities occupied by Government or others unless permitted under the following conditions and then only after arranging to provide temporary utility services according to requirements indicated:

1. Notify Contracting Officer not less than **10** business days in advance of proposed utility interruptions.
2. Do not proceed with utility interruptions without Contracting Officer's written permission.
3. Hours and length of Utility Shutdowns: If utility shutdowns are necessary, the Construction Contractor must receive prior approval from CO for shutdown duration and hours. Any utility outage will be limited to a window of two to four hours.

D. Nonsmoking Building/Tobacco Use/Vaping: Smoking is not permitted within building or within 25 feet of entrances, operable windows, or outdoor air intakes.

1.9 SPECIAL CONSTRUCTION REQUIREMENTS

A. Project Website: A project website administered by NPS will be used for purposes of managing communication and documents during construction stage.

1. See Section 01 31 00 "Project Management and Coordination" for requirements on using Project Website.

B. See Section 01 50 00 “Temporary Facilities and Controls” for requirements for Hot Work Permits.

1.10 SOILS INVESTIGATION REPORT

A. The report, Improvements to West Bluff Trail/Arrival Area Geotechnical Engineering Report, September 1, 2023, prepared by Terracon is included in the Supplemental Documents with this package.

B. The report, DRAFT Geotechnical Report Golden Gate National Recreation Area, Stinson Beach, Tennessee Valley, China Beach, Long Avenue, Fort Funston FHWA Project No. CA FOPO 110(1) & COGA 205(1) Marin County and San Francisco, California, June 22, 2020, prepared by Yeh and Associates, Inc. is in Supplemental Documents with this package.

C. In case of conflict between report and drawings or specifications, the drawings and specifications govern.

1.11 ADDITIONAL REPORTS

A. The report Limited Site Investigation, October 3, 2023, prepared by Terracon is included in the Supplemental Documents with this package.

B. In case of conflict between report and drawings or specifications, drawings and specifications govern.

PART 2 - PRODUCTS (Not Used)

PART 3 - EXECUTION (Not Used)

END OF SECTION 01 11 00

GOGA-244458 / FOPO-186401

SECTION 01 26 01 – CONTRACT MODIFICATION PROCEDURES

PART 1 - GENERAL

1.1 SUMMARY

A. Section consists of administrative and procedural requirements for contract modifications.

1.2 DEFINITIONS AND ALLOWANCES

A. Home Office Overhead: Costs incurred in support of all of a contractor's projects and not attributable to a specific job. The cost for home office overhead is only allowed as a percentage of all direct work excluding profit. The following items represent allowable home office overhead costs identified in Part 31 of the Federal Acquisition Regulation (FAR):

1. Rent
2. Utilities
3. Furnishings
4. Office equipment
5. Executive and management staff not exclusively assigned to the project
6. Support, accounting, and administrative staff
7. Preparation of cost proposals, estimating, and schedule analyses connected with Modifications
8. Estimating and preconstruction services
9. Mortgage costs
10. Real estate and corporate taxes
11. Automobile maintenance and travel costs for home office personnel
12. Home office insurances i.e. structure, automotive, umbrella, flood, etc.
13. Depreciation of equipment and other assets
14. Home office supplies (paper, staples, etc.)
15. Legal services
16. Accounting and data processing
17. Professional fees/registration

B. General Conditions (Field Office Overhead): Management and administrative costs incurred on site for the designated project. Costs associated with preparation of modifications will not be allowed. Costs for these items are to be included only in the general conditions of the modification estimate. Only in the case of a contract time extension are additional general conditions included in modifications. The following items, if applicable, are considered allowable costs for calculating General Conditions:

1. Project Manager (PM), Assistant Project Manager

2. Superintendent, Assistant Superintendent
3. Quality Control, Safety Officer, Environmental Manager, etc.
4. Engineers
5. Travel, lodging, and per diem (as established by Federal Travel Regulations)
6. Scheduling
7. Field Office Trailers and associated temporary utilities
8. Field office supplies

    a. Mailing and couriers
    b. Reproduction costs
    c. Storage
    d. Phones
    e. Computers
    f. Copiers

9. Personal vehicles i.e. Superintendent Pickup trucks

C. General Requirements: Costs directly associated with the project and are necessary to perform the actual work of the modification. These costs shall be shown as direct costs in the estimate. The following items, if applicable, are considered allowable costs for calculating General Requirements:

1. Hoisting
2. Material handling
3. Temporary fencing
4. Port-a-lets
5. Trash removal, dumpsters
6. Barricades
7. Small tools
8. Safety supplies
9. Scaffolding
10. Daily cleaning
11. Traffic control
12. Temporary signage
13. Temporary heating and power

D. Personnel Costs: Costs included in the modification must only be for General Conditions staff and workers actually present and working on project site. Modification costs for salaried workers are only allowed within the structure of a 40-hour week and no overtime or holiday pay will be allowed.

1. Worker Hourly Rates are costs directly associated with the individual worker and consist of the following:

    a. Base Rate: The hourly rate paid directly to the worker
    b. Labor Burden: Employer payments of all applicable burdens; includes insurance and taxes the business must pay on behalf of the worker to government entities and educational forums, such as:

        1) Social Security
        2) Medicare

3) Workers Compensation – Policy and company calculation to be made available.
4) Federal Unemployment Tax Act (FUTA) - Cap Rate and percentage to be proportionally allocated over one year.
5) State Unemployment Tax Act (SUTA) - Cap Rate and percentage to be proportionally allocated over one year.
6) Union agreement costs - Other costs required under an enforceable collective bargaining agreement.

c. Fringe Benefits: Various non-wage compensations provided to employees such as:

1) Health Care Insurance Premiums
2) Cell Phone
3) Clothing
4) 401K and Pensions
5) Vehicle allowances
6) Gas allowance
7) Life insurance premiums
8) Disability insurance
9) Other Fringe Benefits required under an enforceable collective bargaining agreement

E. Bonuses or Deferred Compensation: No Bonus or Deferred Compensation will be allowed within any components of pricing including Home Office Overhead, General Conditions, General Requirements, Hourly Worker Rates, or the direct costs of work.

F. General Liability Insurance: An insurance policy that protects Contractor from claims resulting from bodily injury or property damage to a third party. Include as a separate line item within all modification proposals and provide a current insurance quote upon request.

G. Performance and Payment Bonds: A performance bond is a surety bond issued by an insurance company or bank to guarantee satisfactory completion of a project. The Payment Bond guarantees the Contractor will pay the labor and material costs incurred. Banks and Insurance companies charge a premium for individual project based on a sliding scale related to the size of the project. Include as a separate line item in modification proposals and provide current company bonding rates upon request.

H. Builder's Risk Insurance: Covers the contractor's loss due to fire, high winds, or other natural forces. Not reimbursed by the National Park Service (NPS) and shall not be included in modification proposals.

1.3 MODIFICATION PROPOSAL PRICING REQUIREMENTS

A. General:

1. Proposal be received in the format and within the time frame specified in the Request for Proposal (RFP) letter. Costs or delays resulting from failure of contractor to submit within the time frame specified will not be compensable.
2. Proposal shall be detailed with itemized lists of equipment, materials, labor, production rates, overhead, profit, and bond markup for each item. Labor costs must be itemized

by craft and hourly rate, including Fringe Benefits and Labor Burden. If the costs of Fringe Benefits and Labor Burden are not itemized, it is assumed they are included in the hourly rate shown, or contractor is not requesting reimbursement. Contractor may utilize the government provided Contractor Estimate Form, or their own form, provided that it contains the same information and level of detail as the Government's form.

3. Requests for extensions of contract time as a result of change must be justified with a Time Impact Analysis (TIA). Refer to Section 01 32 16 "Construction Schedule", for time impact analysis requirements. TIA and associated costs shall be received with the proposal by the date shown within the Request for Proposal letter. Contractor's failure to submit within the specified time frame will be construed as the Contractor waiving right for additional time and no time extension will be allowed.
4. All supporting documentation used to justify the proposed modification will be made available to the Contracting Officer (CO) upon request.
5. Contractor shall review and approve all subcontractor/supplier pricing in detail for proper format, scope, production rates, and pricing prior to submission to NPS. All delay costs associated with not reviewing and approving subcontractor/supplier pricing will be borne by the Contractor.
6. All pricing and production rates within the estimate must be based on fair and reasonable pricing and cannot include built-in contingency.

B. Labor:

1. Contractor shall estimate cost of labor by itemizing each craft involved, indicating worker hourly rate (base rate + labor burden + fringe benefits) for each and itemizing hours required for each craft directly engaged in modification work. Any work proposed requiring overtime work or premium pay shall be itemized separately. Rates shall be in accordance with the Davis-Bacon Act as incorporated herein. Labor Burden may include payroll taxes, Social Security, unemployment insurances, workers compensation insurance, Federal Insurance Contributions Act (FICA), FUTA, and other direct costs resulting from Federal, State or local laws.
2. Itemize labor costs for equipment operators separate from equipment costs.
3. Labor cost for foremen shall only be costs for related work required for the modification.

C. Materials:

1. Estimated cost for materials shall include quotes from multiple sources. Material prices shall include applicable fees and credits, including but not limited to, sales tax, freight and delivery charges, and tax rebates.
2. No markup shall be applied to any material provided by NPS.

D. Equipment:

1. Equipment used for the project must be appropriately sized for work being performed.
2. Do not include costs for "miscellaneous tools and equipment", in your proposal for a replacement value of $500 or less. Costs shown in excess of $500 shall be broken out separately.
3. Regardless of ownership, rates to be used in determining equipment rental costs shall be the lowest cost from one of the following sources:

a. United States (U.S.) Army Corps of Engineers, Ownership and Operating Expense Schedule (use latest edition and applicable region)
b. Construction Blue Book
c. Local equipment rental rates, documented by actual invoice charges, or itemized vendor quotes.

4. Estimated equipment rates shall include operating costs of all fuel, oil, lubrication, supplies, small tools, necessary attachments, ground engaging components, tires and tracks, routine repairs and maintenance (cost of major repair and overhaul is not allowed per Federal Acquisition Regulation (FAR) 31.105(d)(2)), depreciation, storage, insurance, and all incidentals. Mobilization, if applicable, may be included for equipment solely used on the modification work but must be listed separately.
5. Estimate full rate for equipment only for duration that equipment will be utilized to accomplish work of the modification.
6. Standby unit rates used in accordance with paragraph 1.3, D, 2, above. If the U.S. Army Corp of Engineers is utilized then their standby rates prevail. If Bluebook or local equipment pricing is accepted, then 1/2 of equipment costs minus any operating costs, major repair and overhaul will be accepted.
7. If equipment is in standby mode due solely to a documented NPS delay, established standby rate shall apply from the first day of the delay.
8. Equipment not used and on job site for up to five consecutive days may be classified at standby rates, provided the equipment is or has been used solely to perform work on the modification and will be necessary to complete additional modification work. Equipment still on the jobsite but not in use after five consecutive days will not be considered in the modification pricing.
9. Requests for compensation for equipment stand by time must be justified, documented and itemized separately.
10. The estimated timeframe (daily, weekly, monthly) for use of the equipment must reflect the lowest cost to the Government.

E. Establishment and Application of Overhead and Profit Percentages:

1. Home Office Overhead and Profit (OH&P) shall be applied to direct costs only. Profit shall not be applied to overhead amounts; and overhead shall not be applied to profit. Home office overhead shall contain only allowable, allocable, and reasonable costs per the contract documents and FAR Part 31. Profit percentages are based on risk factors found in FAR Part 31which have been applied to the specific type of work included in this project. Negotiated rates shall not exceed the following percentages for OH&P for contractor self-performed work:

   Overhead……10%
   Profit……**7.00** %

2. Total aggregate limit of markup (OH&P) for Contractor and Subcontractors on modification work shall not exceed 25%. The NPS will not be responsible for allocation of percentages between contractor and subcontractors at any tier.
3. If Contractors form a partnership, partnership may only receive home office overhead and profit in same amount as an individual Contractor (refer to paragraph 1.3,E,1 above). It is the responsibility of the partners to decide on division of revenue.
4. Combined Increases and Decreases: On proposals involving both increases and decreases in the Contract Price, overhead and profit mark-ups are required on net increases and deducted on net decreases.

5. At no time can profit be calculated on Overhead or itself, it must be calculated on direct costs of work only.

PART 2 - PRODUCTS

PART 3 - EXECUTION

END OF SECTION 012601

GOGA-244458 / FOPO-186401

SECTION 01 27 00 – DEFINITION OF CONTRACT LINE ITEMS

PART 1 - GENERAL

1.1 SUMMARY

A. Section explains in general, what is and is not included in a contract line item, and limits or cut-off points where one item ends and another begins.

B. If no contract line item exists for a portion of work, include costs in a related item.

PART 2 - PRODUCTS (Not Used)

PART 3 - EXECUTION

3.1 LIST OF CONTRACT LINE ITEMS

A. Contract Line Item Number 0001 West Bluff Parking Lot (GOGA 244458).

1. This item consists of realigning parking and turnaround at the north end of the parking lot, realigning the intersection south of the parking lot, constructing a new bike path from the terminus of the existing path on Mason Street to the north end of the parking lot, new pavement and pavement markings, new storm drainage pipe and catch basins, and retaining walls and guardrail along the path. This item also includes the relocation of existing parking lot area lights and an electric vehicle (EV) charging station.
   a. Construction Contractor may be required to provide conduit or other services to support relocation of the EV station system. Government will contract separately with EV station contractor.
   b. Construction Contractor shall retain a qualified electrical sub-contractor to design and perform relocation of parking lot area lights.
2. Measurement for payment will be Lump Sum.
3. Payment will be made at the contract lump sum price.

B. Contract Line Item Number 0002 Plaza/Intersection (FOPO 186401).
1. This item consists of site preparation and site improvements along Long Avenue from Marine Drive to Lincoln Boulevard.
2. Measurement for payment will be Lump Sum.
3. Payment will be made at the contract lump sum price.

C. Contract Line Item Number 0003 Long Avenue (FOPO 186401).

1. This item consists of site preparation and site improvements at the plaza area form at the Marine Drive and Long Avenue intersection.
2. Measurement for payment will be Lump Sum.
3. Payment will be made at the contract lump sum price.

END OF SECTION 01 27 00

GOGA-244458 / FOPO-186401

SECTION 01 31 00 - PROJECT MANAGEMENT AND COORDINATION

PART 1 - GENERAL

1.1 SUMMARY

A. Section includes administrative provisions for coordinating construction operations on Project including, but not limited to, the following:

1. Definitions
2. Construction Coordination
3. Submittals
4. Coordination Drawings
5. Requests for Information (RFIs)
6. NPS/DSC Project Website
7. Project Meetings
8. Environmental Coordination
9. Permits

B. Related Requirements:

1. Section 01 32 16 "Construction Schedule" for preparing and submitting Contractor's construction schedule.
2. Section 01 73 40 "Execution" for procedures for coordinating general installation and field-engineering services, including establishment of benchmarks and control points.
3. Section 01 77 00 "Closeout Procedures" for coordinating closeout of the Contract.

1.2 DEFINITIONS

A. Agency with Jurisdiction
B. Construction Permits – Contractor Provided
C. Government Furnished Permits

1.3 CONSTRUCTION COORDINATION

A. Coordination: Coordinate construction operations included in different Sections of Specifications to ensure efficient and orderly installation of each part of the Work. Coordinate construction operations, included in different Sections, which depend on each other for proper installation, connection, and operation.

1. Schedule construction operations in sequence required to obtain best results where installation of one part of the Work depends on installation of other components, before or after its own installation.
2. Coordinate installation of different components with other Contractors to ensure maximum accessibility for required maintenance, service, and repair.
3. Make provisions to accommodate items scheduled for later installation.
4. Where availability of space is limited, coordinate installation of different components to ensure maximum performance and accessibility for required maintenance, service, and repair of components, including mechanical and electrical.
5. Properly plan construction operations to include permit requirements. Allow enough time to execute permit provisions to maintain work schedule, site visits, inspections, and reporting deadlines.

B. Prepare memoranda for distribution to each party involved, outlining special procedures required for coordination. Include such items as required notices, reports, and list of attendees at meetings.

C. Administrative Procedures: Coordinate scheduling and timing of required administrative procedures with other construction activities and activities of other contractors to avoid conflicts and to ensure orderly progress of the Work. Such administrative activities include, but are not limited to:

1. Preparation of Contractor's Construction Schedule
2. Preparation of the Schedule of Values
3. Installation and removal of temporary facilities and controls
4. Delivery and processing of submittals
5. Progress meetings
6. Permit requirements
7. Pre-installation conferences
8. Project closeout activities

1.4 SUBMITTALS

A. Coordination Drawings: Prepare Coordination Drawings if limited space availability necessitates maximum utilization of space for efficient installation of different components or if coordination is required for installation of products and materials fabricated by separate entities.

1. Content: Project-specific information, drawn accurately to scale. Do not base Coordination Drawings on reproductions of Contract Documents or standard printed data. Include following information, as applicable:

a. Indicate functional and spatial relationships of components of architectural, structural, civil, mechanical, and electrical systems.
b. Indicate dimensions shown on Contract Drawings and make specific note of dimensions that appear to be in conflict with submitted equipment and minimum clearance requirements. Provide alternate sketches to Contracting Officer (CO) for resolution of such conflicts.
c. Indicate space requirements for routine maintenance and anticipated replacement of components during the life of the installation.
d. Show location and size of access doors required for access to concealed dampers, valves, and controls.

e. Indicate required installation sequences.

2. Sheet Size: At least 8-1/2 by 11 inches (215 by 280 millimeters) but no larger than 30 by 40 inches (750 by 1000 millimeters).
3. Number of Copies: Submit **two** <**2**> opaque copies of each submittal. Contracting Officer will return **one** <1> **copy**.
4. Refer to individual Sections for Coordination Drawing requirements for Work in those Section

B. Coordination Drawing Organization: Organize coordination drawings as follows:

1. Structural Wall Systems: Show site coordination elements. Provide plan, elevation, section drawings and details to represent the Work.

2. Review: Contracting Officer will review coordination drawings to confirm Work is being coordinated; details of coordination are Contractor's responsibility. If Contracting Officer determines coordination drawings are not prepared in scope or detail, or are otherwise deficient, Contracting Officer will inform Contractor, who shall make changes and resubmit.

C. Coordination Digital Data Files: Prepare coordination digital data files according to:

1. File Preparation Format: Same digital data software program, version, and operating system as original Drawings.
2. File Submittal Format: Submit or post coordination drawing files using Portable Document Format (PDF) file format.
3. Contracting Officer will furnish Contractor one set of digital data files (AutoCad.dwg) of Drawings for use in preparing coordination digital data files.

   a. Contracting Officer makes no representations as to accuracy or completeness of digital data files as they relate to Drawings.
   b. Digital Data Software Program: Drawings are available in AutoCad.dwg.

D. Division 1 documents: The following items shall be submitted a minimum of one week prior to Preconstruction Conference. Contracting Officer will notify Contractor of tentative date for Pre-Construction Conference.

1. Letter designating Project Superintendent
2. Construction Schedule
3. A Comprehensive Schedule of Values
4. Accident Prevention Plan
5. A List of Subcontractors for this project
6. Written statements from Subcontractors certifying compliance with applicable labor standard clauses.
7. Certificates of Insurance or SF1413 for Contactor and all Subcontractors
8. Waste Management Plan
9. Quality Control Plan
10. Traffic Control Plan
11. Under-an-Acre Pollution Prevention Plan (UPPP)
12. List of Required Construction Permits. Include the following information for each permit:
    a. Name of Permit

b. Agency(ies) with Jurisdiction issuing the permit
c. Information required from Government to complete permit application

E. Provide items listed to Contracting Officer before Pre-Construction Conference. If all documents have not been received one week prior to scheduled Pre-Construction Conference date, conference may be cancelled, Notice to Proceed may not be issued, and Contracting Officer will consider other contractual remedies. Work shall not commence until written Notice to Proceed has been issued.

1.5 REQUESTS FOR INFORMATION (RFIs)

A. General: Immediately on discovery of the need for additional information or interpretation of Contract Documents, Contractor shall prepare and submit an RFI utilizing form created on NPS/DSC management software-website.

1. Contracting Officer will not respond to RFIs submitted by other entities controlled by Contractor.
2. Coordinate and submit RFIs in a prompt manner to avoid delays in the work.

B. Content of RFI: Include detailed, legible description of item needing information or interpretation and the following:

1. RFI number, numbered sequentially
2. Date
3. RFI subject
4. Specification Section number and title and related paragraphs, as appropriate.
5. Drawing number and detail references, as appropriate.
6. Field dimensions and conditions, as appropriate.
7. Contractor's suggested resolution: If Contractor's suggested resolution impacts Contract Time or Contract Sum, Contractor shall state impact in RFI.
8. Contractor's signature
9. Requested date for response
10. Attachments: Include sketches, descriptions, measurements, photos, Product Data, Shop Drawings, coordination drawings, and other information necessary to fully describe items needing interpretation.

    a. Include dimensions, thicknesses, structural grid references, and details of affected materials, assemblies, and attachments on attached sketches.

C. RFI Form: Complete RFI Form on NPS/DSC Project Website as follows:

1. Enter general information at the top of the form.
2. Under the "Action" section at the bottom of the form, select "Question" then select "CMR" in drop-down of "Send to" box.
3. Enter details of question and attach related documents.
4. Select "Submit Form" at bottom of page.

D. Contracting Officer’s Action: Contracting Officer will review each RFI, determine action required, and respond. Contracting Officer will determine critical nature of each RFI and issue response accordingly.

1. The following are not considered to be RFIs and will receive no action:

    a. Requests for approval of submittals.
    b. Requests for approval of substitutions.
    c. Requests for approval of Contractor's means and methods.
    d. Requests for coordination information already indicated in Contract Documents.
    e. Requests for adjustments in Contract Time or Contract Sum.
    f. Requests for interpretation of Architect's actions on submittals.
    g. Incomplete RFIs or inaccurately prepared RFIs.

2. Contracting Officer's action may include a request for additional information; time for response will date from time of receipt of additional information.
3. Contracting Officer's action on RFIs may result in need for a change to Contract Time or Contract Sum. All contract changes will be processed following terms and conditions of contract.

1.6 PROJECT WEB SITE

A. Use NPS/DSC management software website for communication throughout contract period on:

1. Project directory
2. Project correspondence
3. Meeting agendas and minutes
4. Contract modifications forms and logs
5. RFI form and processing
6. Task and issue management
7. Photo documentation
8. Baseline schedule, schedule updates and calendar management
9. Submittal form and processing
10. Payment coordination documentation
11. Drawing and specification document hosting, viewing, and updating
12. Online document collaboration
13. Reminder and tracking functions
14. Archiving functions
15. Notification of submittal and RFI statuses and current responsible party
16. Permits and addendums

B. Some documents are not suitable to be shared using the NPS/DSC management software website. Documents containing Personal Identifying Information (PII) (i.e. certified payrolls) shall not be shared using NPS/DSC management software website and shall be coordinated with Project team as appropriate.

C. Submit to Contracting Officer a list of employees who will need access to the website. Users will receive an invitation to register from Department of Interior (DOI). Once registered on DOI website, user will be given access to NPS/DSC management software website.

D. All users will be required to have the following software packages:

1. Internet Explorer version 7 or later.
2. Adobe Acrobat Professional (Pro) version 9 or later.

1.7 PROJECT MEETINGS

A. Preconstruction Conference: Before start of construction, Contracting Officer will arrange an on-site meeting with Contractor. Meeting agenda will include the following as a minimum:

1. Roles & Responsibilities / Lines of Authority
2. Park rules and regulations
3. Jobsite Safety
4. Workplan & Schedule
5. Resolution of comments on required Division 1 documents
6. Coordination of Subcontractors
7. Labor law application
8. Modifications
9. Payments to Contractor
10. Payroll reports
11. Contract time
12. Liquidated damages
13. Contractor Performance Evaluation
14. Display of Hotline posters
15. Notice to proceed
16. Correspondence procedures
17. NPS/DSC Project website
18. Acceptance/rejection of work
19. Progress meetings
20. Submittal procedures
21. NPS Final Accessibility Inspection
22. Environmental requirements
23. Permit requirements
24. As-constructed drawings/operation and maintenance (O&M) manuals.
25. Saturday, Sunday, holiday and night work.
26. Reference materials
27. Value engineering
28. Schedule of Values

B. Progress Meetings: Contracting Officer will schedule weekly meetings with Contractor.

1. Attendees: In addition to Government Representatives, each Contractor, Subcontractor, supplier, and other entity concerned with current progress or involved in planning, coordination, or performance of future activities shall be represented. Participants at meeting shall be familiar with Project and authorized to conclude matters relating to the Work.
2. Agenda: Review and correct or approve minutes of previous progress meeting. Review other items of significance that could affect progress. Meeting agenda will include:

    a. Approval of minutes of previous meetings
    b. Submittal status
    c. Review of off-site fabrication and delivery schedules.
    d. Requests for information (RFI) and other issues.
    e. Modifications

f. Work in progress and projected.
   1) Status of required inspections (Special Inspections, Accessibility, etc.)
g. Inspections of work in progress and projected (Special inspections, Accessibility, etc.)
h. Construction Schedule update (provide updated Critical Path Method (CPM)).
i. Status of Project Record Drawings and O&M manuals.
j. Other business relating to work.
k. Permit requirements

C. Preinstallation Conferences: Conduct at Project site before each construction activity that requires coordination with other construction.

1. Attendees: Installer and representatives of manufacturers and fabricators involved in or affected by installation and its coordination or integration with other materials and installations that have preceded or will follow, shall attend meeting. Advise Contracting Officer of scheduled meeting dates.
2. Agenda: Review progress of other construction activities and preparations for particular activity under consideration, including requirements for:

   a. Contract Documents
   b. Options
   c. Related RFIs
   d. Related Change Orders
   e. Purchases
   f. Deliveries
   g. Submittals
   h. Review of mockups
   i. Possible conflicts
   j. Compatibility requirements
   k. Time schedules
   l. Weather limitations
   m. Manufacturer's written instructions
   n. Warranty requirements
   o. Compatibility of materials
   p. Acceptability of substrates
   q. Temporary facilities and controls
   r. Space and access limitations
   s. Regulations of agency(ies) with jurisdiction
   t. Testing and inspecting requirements
   u. Installation procedures
   v. Coordination with other work
   w. Required performance results
   x. Protection of adjacent work
   y. Protection of construction and personnel

3. Record significant conference discussions, agreements, and disagreements, including required corrective measures and actions.
4. Reporting: Distribute minutes of meeting to each party present and to other parties requiring information.

5. Do not proceed with installation if conference cannot be successfully concluded. Initiate whatever actions are necessary to resolve impediments to performance of Work and reconvene conference at earliest feasible date.

1.8 ENVIRONMENTAL COORDINATION

A. Contractor's Environmental Manager: Designate on-site party responsible for overseeing Contractor's conformance to environmental goals for project and implementing procedures for environmental protection.

1. Qualifications: Minimum 3 years Construction experience on projects of similar size and scope; with environmental procedures similar to this project; familiar with environmental regulations applicable to construction operations.
2. Responsibilities: Responsibilities shall include:

   a. Compliance with applicable Federal, State, and local environmental regulations, including maintaining required documentation.
   b. Implementation of Waste Management Plan (WMP).
   c. Implementation of Under-an-Acre Pollution Prevention Plan (UPPP).
   d. Present overview of environmental issues and summarize site specific procedures relating to management plans at Preconstruction conference.
   e. Training for Contractor personnel in accordance with position requirements.
   f. Monitoring and documentation of environmental procedures.

B. Perform project quality control in accordance with requirements specified in Related Sections, including:

1. Quality Requirements
2. Regulatory Requirements
3. Noise and Acoustics Management
4. Pollution Prevention Management
5. Construction Waste Management

C. Contractor's Environmental Training Program: Contractor shall provide environmental training for workers performing work on project site. Training shall include:

1. Overview of environmental issues related to building industry.
2. Overview of environmental issues related to Project.
3. Review of site-specific procedures and management plans:

   a. Construction Waste Management
   b. Noise and Acoustics Management
   c. Under-an-Acre Pollution Prevention
4. Compliance with environmental regulations: As specified in Regulatory Requirements. Submit Contractor 40 CFR (Code of Federal Regulations) employee training records upon request of Contracting Officer.

D. Provide documentation for environmental procedures as specified herein and in accordance with approved Waste Management Plan, and Under-an-Acre Pollution Prevention Plan.

1.9 PERMITS

A. General:

1. Permits and Responsibilities: Contractor shall, without additional expense to the Government, be responsible for obtaining necessary licenses and permits, and for complying with Federal, State and municipal laws, codes, and regulations applicable to the performance of the work. Contractor shall also be responsible for damages to persons or property that occur as a result of Contractor's fault or negligence; and for materials delivered and work performed until completion and acceptance of the work.
2. For the purpose of this contract, Contractor will not be considered an agent of the Government. Contractor shall comply with appropriate Federal, State and local laws.

B. Government Furnished Permits: During development of the project's design, permits listed below were negotiated and agreed to by the Government. Terms and provisions of these permits shall be adhered to for the duration specified in each permit.

1. None.

C. Potential Permits: Permits listed below were identified during the design process as likely to be required based on typical means and methods of construction. The list is provided to assist Contractor in determining which permits will be required for contract's chosen means and methods. The list shall not be considered complete; it is the Contractors' responsibility to determine means and methods and obtain required permits. Contractor shall obtain all permits required to legally conduct work.
1. Construction trailer, Utilities hookup permit - NPS
2. Street Closure – NPS
3. Hot Work Permit – Park Fire Inspector, Matt Harrison (415) 629-8154

D. Coordination with Agency(ies) with Jurisdiction Issuing Permits

1. Coordination: Contact the Agency(ies) with Jurisdiction as needed and sufficiently in advance to avoid delaying work: Coordinate meetings, reporting requirements, inspections, and other requirements.

E. Administrative Procedures:

1. Coordinate scheduling and timing of required administrative provisions of project permits with Agency(ies) with Jurisdiction, Construction Manager, and Park to avoid conflicts.
2. Supply needed information to Agency(ies) with Jurisdiction issuing permits, pay fees required and provide material needed to comply with permit's conditions and provisions.
3. Upload permits to NPS/DSC management software website when permits are obtained.

PART 2 - PRODUCTS (Not Used)

PART 3 - EXECUTION (Not Used)

END OF SECTION 01 31 00

GOGA-244458 / FOPO-186401

SECTION 01 32 16 – CONSTRUCTION SCHEDULE

PART 1 - GENERAL

1.1 SUMMARY

A. Section consists of Construction Schedule requirements including:

1. Schedule of Values
2. Construction Schedule Requirements.
3. Construction Schedule Updates.
4. Time Impact Analysis.

B. Purpose: The Construction Schedule ensures adequate planning, coordination, scheduling, and reporting during execution of the work by the Contractor. It shall assist the Contractor and Contracting Officer (CO) in monitoring the progress of the work, evaluating proposed changes, and processing Contractor's monthly progress payments. It shall include the dates in the contract, phases, milestones, occupancies, holidays, weather consideration, a critical path, and the requirements of this section.

1.2 DEFINITIONS

A. Activity: A discrete part of a project identified for planning, scheduling, monitoring, and controlling the construction project. Activities included in a construction schedule consume time and resources.

1. Critical activities are activities on the critical path. They start and finish on the planned early start and finish times.
2. Predecessor Activity: An activity that precedes another activity in the network.
3. Successor Activity: An activity that follows another activity in the network.

B. Cost Loading: Allocation of the Schedule of Values for completion of an activity as scheduled. The sum of costs for all activities must equal the total Contract Sum, unless otherwise approved by the Contracting Officer.

C. Critical Path Method (CPM): Method of planning and scheduling a construction project where activities are arranged based on activity relationships. Network calculations determine when activities can be performed and the critical path of Project.

D. Critical Path: Longest connected chain of interdependent activities through the network schedule that establishes minimum overall Project duration and contains no float.

E. Float: Measure of leeway in starting and completing an activity.

1. Float: Not for the exclusive use or benefit of the Government or Contractor but is jointly owned.
2. Free Float: Amount of time an activity can be delayed without adversely affecting the early start of the successor activity.
3. Total Float: Measure of leeway in starting or completing an activity without adversely affecting planned Project completion date.

F. Resource Loading: Allocation of manpower and equipment necessary for completion of an activity as scheduled.

G. Fragnet: A partial or fragmentary network that breaks down activities into smaller activities for greater detail.

1.3 SUBMITTALS

A. Electronic Copies: Schedules and reports submitted shall be posted on the NPS/DSC management software website in native electronic file formats. The intent of the Government is to limit the number of printed reports to those determined by the project team as essential.

B. Schedule of Values: After contract award and before Pre-Construction conference, submit schedule of dollar values based on Contract Price Schedule.

C. Construction Baseline Schedule: After contract award and before Pre-Construction conference, submit **two** paper copies of baseline schedule, large enough to show entire schedule for entire construction period. Utilize Schedule of Values in preparation of Construction Baseline Schedule.

D. Critical Path Method (CPM) Reports: Concurrent with CPM schedule, submit **three** paper copies of the following computer-generated reports. For each activity, include activity number, activity description, cost and resource loading, original duration, remaining duration, early start date, early finish date, late start date, late finish date, and total float in calendar days.

1. Activity Report: List of activities sorted by activity number and then early start date, or actual start date if known.
2. Logic Report: List of predecessor and successor tasks for activities sorted in ascending order by activity number and then early start date, or actual start date if known.
3. Total Float Report: List of activities sorted in ascending order of total float.

E. Construction Schedule Updates: On or before 7th day preceding progress payment request date, submit estimates of percent completion of each schedule activity and necessary supporting data. Provide two paper copies.

F. Construction Schedule Revisions and Time Impact Analysis: For each Construction Schedule revision, submit **two** paper copies of a Time Impact Analysis. Incorporate a Fragmentary Network (Fragnet) into currently accepted Construction Schedule that demonstrating how Contractor proposes to incorporate a modification, change, delay, or Contractor request.

1.4 QUALITY ASSURANCE

A. Contractor shall meet with Contracting Officer on day of the preconstruction conference to go over:

1. Review software limitations, content and format for reports.
2. Verify availability of qualified personnel needed to develop and update schedule.
3. Discuss constraints, including **phasing, work stages**, **area separations**, **interim milestones**, **and substantial completions.**
4. Review delivery dates for Government-furnished products.
5. Review schedule for work of separate Government contracts.
6. Review time required for review of submittals and re-submittals.
7. Review requirements for tests and inspections by independent testing and inspecting agencies.
8. Review time required for completion and startup procedures.
9. Review time required for obtaining and activating permits.
10. Review and finalize list of construction activities to be included in schedule.
11. Review baseline schedule comments, resolve issues and progress on incorporating them
12. Review procedures for updating schedule.
13. Discuss reporting requirements and establish protocol for naming and transmitting electronic schedules.

B. Contractor's Schedule Representative: Before the preconstruction conference, designate an authorized representative to be responsible for preparing and maintaining the Construction Schedule. Submit resume outlining qualifications of Scheduler to Contracting Officer for acceptance. Scheduler shall have prepared and maintained at least 5 previous schedules of similar size and complexity similar to this Contract, demonstrating proficiency of using scheduling software. Authorized representative will be responsible for preparing the Baseline Schedule, required updates, revisions, Time Impact Analyses, and reports.

1.5 COORDINATION

A. Coordinate preparation and processing of schedules and reports with performance of construction activities and with scheduling and reporting of separate Contractors.

B. Coordinate Construction Baseline Schedule with Schedule of Values, list of subcontracts, Submittals Schedule, progress reports, payment requests, and other required schedules and reports.

1. In developing Construction Baseline Schedule, ensure Subcontractor’s work at all tiers, and prime Contractor’s work, is included and coordinated.
2. Secure time commitments for performing critical elements of work from parties involved.
3. Coordinate each construction activity in network with other activities and schedule in proper sequence.

PART 2 - PRODUCTS

2.1 SCHEDULE OF VALUES

A. Breakdown each lump-sum item into component work activities used in the schedule for which progress payments may be requested. Work activities broken out within schedule of values shall be integrated into and made a logical part of the construction baseline schedule. Total costs for the component work activities shall equal contract price for that lump-sum item. Contracting Officer may request data to verify accuracy of dollar values. Include mobilization, general condition costs, overhead and profit in the total dollar value of unit price items and in the component work activities for each lump-sum item. Do not include mobilization, general condition costs, overhead or profit as a separate item.

B. Do not break down unit price items. Use only the contract price for unit price items.

C. Total cost of all items shall equal the contract price. The Schedule of Values will form the basis for progress payments and the Construction Schedule.

2.2 CONSTRUCTION SCHEDULE REQUIREMENTS

A. Construction Baseline Schedule: Prepare Construction Baseline Schedule using a computerized, cost and resource-based**,** time-scaled Critical Path Method network analysis diagram for the Work.

1. Develop and finalize Construction Baseline Schedule so it can be accepted for use no later than **30** days after date established for the Notice of Award.

a. Failure to include any work item required for performance of this Contract shall not excuse Contractor from completing work within applicable completion dates, regardless of Governments acceptance of schedule.

2. Establish procedures for monitoring and updating Construction Baseline Schedule and for reporting progress. Coordinate procedures with progress meeting and payment request dates.

B. Construction Baseline Schedule Preparation: Prepare a list of all activities required to complete the Work. Using preliminary Critical Path Method network diagram, prepare a skeleton network to identify probable critical paths.

1. Activities: Indicate estimated duration, sequence requirements, and relationship of each activity in relation to other activities.
2. Critical Path Activities: Identify critical path activities, including those for interim completion dates. Scheduled start and completion dates shall be consistent with Contract milestone dates.
3. Processing: Process data to produce output data on a computer-drawn, time-scaled network. Revise data, reorganize activity sequences, and reproduce as often as necessary to produce the Critical Path Method schedule within the limitations of the Contract Time.

4. Show sequence and interdependence of activities required for completion of work. Ensure work sequences are logical and Construction Baseline Schedule shows a coordinated plan of the work.
5. Resource loading of each activity shall include personnel by labor category and equipment type and capacity proposed to complete the activity in duration shown.
6. Consider seasonal weather conditions in planning and scheduling work influenced by high and low ambient temperatures, wind, or precipitation to ensure completion of work within contract time.
7. Time Frame: Proposed duration assigned to each activity shall be Contractor's best estimate of time required to complete activity considering the scope and resources planned for activity.

    a. An early finish date may be shown but the late finish date shall be same date as last day of contract period. An early completion schedule shall contain:

        1) Insert an activity titled "Project Float" as a successor to last activity in early project completion schedule network.
        2) Add a milestone titled "Contract End Date" as a successor to the activity "Project Float".
        3) Add duration to the activity "Project Float" as required so the milestone "Contract End Date" equals the last day of Contract Period.

    b. Contract completion date shall not be changed by submission of a schedule that shows an early completion date.
    c. Contractor shall limit use of lead or lag duration's between schedule activities.
    d. Project Calendars: Develop and incorporate the following calendars:

        1) Administrative Calendar: Include calendar based on a 7-day week to be used on activities based on calendar days. Apply this calendar to administrative tasks or other tasks not affected by non-working days (Federal Holidays, weather, etc.).
        2) Project Calendar: Include calendar based on planned work week for the project. Include Federal Holidays, weekends, and non-workdays indicated in contract documents. Apply this calendar to activities not anticipated to be affected by weather. Be clear when identifying number of work days in work week.
        3) Weather Calendar: Utilize Project Calendar and show anticipated normal downtime related to weather as non-working time. Weather days shall be based on data for local area from a reliable source like the National Oceanic and Atmospheric Administration (NOAA), National Park Service records, or source acceptable to Contracting Officer. Apply this calendar to activities anticipated to be affected by weather.

    e. Activity Duration: Define so no activity is longer than **21** days, except for non-construction activities including mobilization, shop drawings and submittals, fabrication and delivery of materials and equipment.
    f. Procurement Activities: Include procurement process activities for long lead items and major items, requiring a cycle of more than 60 calendar days, as separate activities in the schedule. Procurement cycle activities can include submittals, approvals, purchasing, fabrication, and delivery.

g. Submittal Review Time: Include review and re-submittal times indicated. Coordinate submittal review times in Construction Baseline Schedule.
h. Substantial Completion: Allow time for Government administrative procedures necessary for certification of Substantial Completion. (For more information, refer to Specification 01 77 00 "Closeout Procedures.")

8. Constraints: Include constraints and work restrictions indicated in Contract Documents and as follows in schedule and show how the sequence of Work is affected.
   a. Work under More Than One Contract: Include a separate activity for each contract.
   b. Work Restrictions: Show effect of the following on the schedule:

      1) Coordination with existing construction
      2) Limitations of continued occupancies
      3) Uninterruptible services
      4) Partial occupancy before Substantial Completion
      5) Use of premises restrictions
      6) Provisions for future construction
      7) Seasonal variations
      8) Environmental control
      9) Permit provisions
   c. Work Stages: Indicate important stages of construction for each major portion of the Work.

      1) Subcontract awards
      2) Submittals
      3) Purchases
      4) Mockups
      5) Fabrication
      6) Sample testing
      7) Deliveries
      8) Installation
      9) Tests and inspections
      10) Adjusting
      11) Curing

9. Milestones: Include milestones indicated in Contract Documents in schedule, including, but not limited to, Notice to Proceed, Substantial Completion.

C. Joint Review, Revision, and Acceptance:

1. Within seven calendar days of receiving Contractor's proposed Construction Baseline Schedule, Contracting Officer shall review initial Construction Baseline Schedule.
2. Within seven calendar days after review, Contractor shall revise and resubmit Construction Baseline Schedule in accordance with comments presented from review.
3. In the event the Contractor fails to define any element of work, activity, or logic, and the Contracting Officer review does not detect this omission or error, such omission or error, when discovered by Contractor or Contracting Officer, shall be corrected by Contractor within seven calendar days and shall not affect contract period.
4. Upon acceptance of the Construction Baseline Schedule, Contracting Officer saves schedule as a baseline and updates on a monthly basis. Construction schedule update will

be used to evaluate Contractor's monthly applications for payment based upon information developed at monthly Construction Schedule update meeting.

D. Cost Correlation: In the heading of the schedule, provide a cost correlation line, indicating planned and actual costs. On the line, show dollar volume of Work performed as of dates used to prepare payment requests.

1. Contractor shall assign cost to construction activities on Construction Baseline Schedule. Costs shall not be assigned to submittal activities unless specified otherwise but may, with Contracting Officer's approval, be assigned to fabrication and delivery activities. Costs shall be included for testing and commissioning activities, operation and maintenance manuals, punch list activities, Project Record Documents, and demonstration and training (if applicable).
2. Each activity cost shall reflect an accurate value based on the Contract Price Schedule.
3. Total cost assigned to activities shall equal total Contract Price.

E. Recovery Schedule: When periodic schedule update indicates Work is **14** or more calendar days behind current accepted schedule, a separate recovery schedule indicating means by which Contractor intends to regain compliance with the schedule shall also be submitted. Indicate changes to working hours, working days, crew sizes, and equipment required to achieve compliance, and date by which recovery shall be accomplished.

F. Computer Software: Prepare schedules using a program developed specifically to manage construction schedules.

1. Use Microsoft Project or Primavera, for **Windows operating system** (Windows 7 and newer.)

PART 3 - EXECUTION

3.1 CONSTRUCTION SCHEDULE UPDATES

A. Progress Meeting Updates: Provide a **3-**week look-ahead schedule, derived from the currently accepted schedule, before each weekly progress meeting. Utilize look-ahead schedule to facilitate and take notes on discussions held during progress meeting.

B. Monthly Schedule Updates:

1. General: Update Construction Schedule on monthly basis to reflect construction progress and activities throughout entire contract period and until project substantial completion. The status date of each schedule update shall be the 7th day preceding the progress payment request date.
2. Procedure: Contractor shall meet with Contracting Officer each month at Construction Schedule update meeting to review progress made through the status date of the Construction Schedule update, including dates activities were started or completed and percentage of work completed on each activity started or completed.
3. Reports: Concurrent schedule revisions, prepare tabulated reports showing:

a. Identification of activities that have changed

b. Changes in early and late start dates
c. Changes in early and late finish dates
d. Changes in activity durations in workdays
e. Changes in the critical path
f. Changes in total float or slack time
g. Changes in the Contract Time

4. Narrative: Report shall include a brief description of actual progress made during update period; actual and potential delaying activities; impediments to progress; issues related to inclement weather; progress toward established milestones and project float. Report shall include a brief description of work anticipated to be performed in the next month. Minor revisions to the schedule should be identified for evaluation and acceptance or rejection.
5. As Work progresses, indicate Actual Completion percentage for each activity.
6. If schedule update shows a late finish date after contract completion date, include:

   a. Known delays
   b. Actions to get back on schedule
   c. Pending modifications
   d. Impediments or constraints affecting progress

7. Progress Payments: Monthly updating of the currently accepted Construction Schedule shall be an integral part of the process upon which progress payments will be made. If Contractor fails to provide schedule updates or revisions, a portion of the monthly payment may be retained until corrections have been made.

C. Distribution: Distribute copies of accepted schedule to Contracting Officer, Contracting Officers Representative, Construction Management Representative, Subcontractors, testing and inspecting agencies, and other parties identified by Contractor with a need-to-know schedule responsibility.

1. Post copies in Project meeting rooms and temporary field offices.
2. When revisions are made, distribute updated schedules to same parties and post in same locations. Delete parties from distribution when they have completed their assigned portion of the Work.

D. Construction Schedule Revisions:

1. Required Revisions: If, as a result of the monthly schedule update, it appears the currently accepted Construction Schedule no longer represents actual prosecution and progress of the work, Contracting Officer will request, and Contractor shall submit, a revision to the Construction Schedule. Contractor may also request reasonable revisions to currently accepted Construction Schedule in event the Contractor's planning for the work is revised. If Contractor desires to make changes, Contractor shall notify Contracting Officer in writing, stating reason for proposed revision. Accepted revisions shall be incorporated into currently accepted Construction Schedule for next monthly schedule update.
2. Procedure: If revision to currently accepted Construction Schedule is contemplated, Contractor or Contracting Officer shall advise the other in writing at least seven calendar days prior to next monthly schedule update meeting, describing revision and reasons for the revision. Government-requested revisions will be presented in writing to the Contractor, who shall respond in writing within seven calendar days.
3. Reports: Concurrent with making revisions to schedule, prepare tabulated reports showing:

a. Identification of activities changed
b. Changes in early and late start dates
c. Changes in early and late finish dates
d. Changes in activity durations in workdays
e. Changes in critical path
f. Changes in total float or slack time

3.2 TIME IMPACT ANALYSIS FOR CONTRACT MODIFICATIONS CHANGES DELAYS AND CONTRACTOR REQUESTS:

1. Requirements: When contract modifications or changes are initiated, delays experienced, or Contractor desires to revise currently accepted Construction Schedule, Contractor shall submit to Contracting Officer a written time impact analysis illustrating the influence of modification, change, delay, or Contractor request on contract time.
2. Time Extensions: Activity delays, resulting in a late completion date projection, shall not automatically mean an extension of contract time is warranted or due to Contractor. It is possible a modification, change, or delay will not affect existing critical path activities or cause non-critical activities to become critical. A modification, change, or delay may result in absorbing a part of available total float that may exist within an activity chain of the Schedule, not causing any effect on contract time. Time extensions will be granted in accordance with terms of contract.
3. Extension of contract time will be granted only to the extent the equitable time adjustments to activity or activities affected by modification, change, or delay exceeds total (positive or zero) float available on a particular activity.
4. Procedure: Each time impact analysis shall be submitted within time period stated in a request for proposal, or time period designated under the clauses entitled Changes or Default. In cases where Contractor does not submit a written request for extension of time and a time impact analysis within the designated time, it is mutually agreed that the particular modification, change, delay, or Contractor request does not require an extension of the contract time. Upon acceptance, time impact analysis shall be incorporated into currently accepted Construction Schedule at next monthly schedule update.
5. Contract Modifications: Prepare time-impact analysis using fragnets to demonstrate effect of proposed change on overall Construction Schedule for each proposed contract modification concurrent with submission.

END OF SECTION 01 32 16

GOGA-244458 / FOPO-186401

SECTION 01 32 33 – PHOTO DOCUMENTATION

PART 1 - GENERAL

1.1 SUMMARY

A. Section includes administrative and procedural requirements for:

1. Existing condition images
2. Periodic construction images

B. See Section 01 77 00 "Closeout Procedures" for a complete listing of closeout documents.

C. See Section 01 79 00 "Demonstration and Training" for submitting videotapes of demonstration of equipment and training of National Park Service (NPS) personnel.

1.2 SUBMITTALS

A. Construction Images: Submit images electronically within seven days of taking the image. Include:

1. Date, time and number (sequentially number all images) in filename.
2. Description of vantage point, indicating location, direction (by compass point), and elevation or story of construction.
3. Submit digital images exactly as originally recorded in digital camera, without alteration, or modifications using image-editing software.

B. Closeout: Submit complete set of digital image electronic files as a Project Record Document**.** Submit on Digital Video Disc (DVD).

1. Provide index as separate file on Disc. List each image as a file name with number, date, and time. Include description and or vantage point image was taken.
2. Submit images that have the same aspect ratio as the sensor, un-cropped.

PART 2 - PRODUCTS

2.1 FORMAT REQUIREMENTS

A. Media: DVD-R Archival Gold

B. Media Labels: Archival DVD labeling markers, archival labels, or direct print.

C. Images: Provide sRGB (standard Red Green Blue) color images in JPEG (Joint Photographic Experts Group) format. Minimum sensor size of 8, and at image resolution of not less than 3200 by 2400, and 300 dpi (dots per inch).

PART 3 - EXECUTION

3.1 CONSTRUCTION IMAGES

A. General: Take digital images using the maximum range of depth of field, in-focus, to clearly show the Work. No blurry or out-of-focus areas accepted.

1. Maintain index with each set of Construction images and identify the number, date, time, and description for each.
2. Maintain one set of images accessible in field office at Project site available for reference.

B. Existing Condition Images: Before commencement of demolition, take color digital images of Project site and surrounding properties, including existing items to remain during construction, from different vantage points.

1. Flag construction limits before recording construction images.
2. Take eight separate images to show existing conditions adjacent to property before starting Work.
3. Take eight separate images of existing buildings either on or adjoining property to accurately record physical conditions at start of construction.

C. Periodic Construction Images: Take 12 color, digital images weekly, with timing each month adjusted to coincide with cutoff date associated with each Application for Payment. Select vantage points to show status of construction and progress since last images were taken.

D. Additional Images: Contracting Officer may issue requests for additional images.

1. Three days advance, where feasible.
2. In emergency situations, take additional images within 24 hours of request.
3. Additional images include, but are not limited to:

a. Immediate follow-up when on-site events result in construction damage or losses.
b. Fabrication locations away from Project site.
c. Substantial Completion of a major phase or component of Work.
d. Extra record images at time of final acceptance.

END OF SECTION 01 32 33

GOGA-244458 / FOPO-186401

SECTION 01 33 23 - SUBMITTAL PROCEDURES

PART 1 - GENERAL

1.1 SUMMARY

A. Section includes administrative and procedural requirements for submitting Shop Drawings, Product Data, Samples, and other submittals.

1.2 DEFINITIONS

A. Action Submittals: Written, graphic information, and physical samples that require Government's responsive action.

B. Informational Submittals: Written information that does not require Government's responsive action. Submittals may be rejected for not complying with requirements.

C. File Transfer Protocol (FTP): Communications protocol that enables transfer of files to and from another computer over a network and that serves as the basis for standard Internet protocols. An FTP site is a portion of a network located outside of network firewalls within which internal and external users are able to access files.

D. Portable Document Format (PDF): An open standard file format licensed by Adobe Systems used for representing documents in a device-independent and display resolution-independent fixed-layout document format.

1.3 GENERAL SUBMITTAL PROCEDURES

A. General: Prepare and submit submittals required by individual Specification Sections and in some cases as requested in drawings. Types of submittals are indicated in individual specific sections.

1. Contracting Officer (CO) reserves right to require submittals in addition to those called for in individual sections.

B. Coordination: Coordinate preparation and processing of submittals with performance of construction activities. Review for legibility, accuracy, completeness, and compliance with Contract Documents.

1. Coordinate submittal with fabrication, purchasing, testing, delivery, other submittals, and related activities that require sequential activity.
2. Coordinate transmittal of different types of submittals for related parts of Work so processing will not be delayed because of need for concurrent review coordination.

a. Contracting Officer reserves right to withhold action on a submittal requiring coordination with other submittals until related submittals are received.

C. Submittal List: Submittal list for each PMIS is attached to the end of this Specification Section. Division 1 submittals are included on the PMIS 244458 list. The intent is to provide an overall summary of submittal requirements. The requirements of individual Specification Sections and terms and conditions of the Contract still apply regardless of what is shown on submittal lists.

D. Processing Time: Allow time for submittal review, including time for re-submittals, as follows. Time for review shall commence when e-mail notification is received by Contracting Officer (or designee) indicating submittal has been posted on NPS management software website and is ready for review. When Contracting Officer has completed review, e-mail notification will be sent to Contractor indicating submittal has been processed. No extension of Contract Time will be authorized because of failure to transmit submittals in advance of Work to permit processing, including re-submittals.

1. Action Submittals

a. Initial Review: Allow 30 days for initial review of each submittal. Allow additional time if coordination with subsequent submittals is required.
b. Re-submittal Review: Allow 14 days for review of each re-submittal.

2. Informational submittals

a. Review: Allow 10 days for review of each submittal.

E. Approved Equals:

1. For each item proposed as an "approved equal," submit supporting data, including:

a. Drawings and samples as appropriate.
b. Comparison of the characteristics of the proposed item with that specified.
c. Changes required in other elements of the work because of the substitution.
d. Name, address, and telephone number of vendor.
e. Manufacturer’s literature regarding installation, operation, and maintenance, including schematics for electrical and hydraulic systems, lubrication requirements, and parts lists. Describe availability of maintenance service, and state source of replacement materials.

2. A request for approval constitutes a representation that Contractor:

a. Has investigated the proposed item and determined that it is equal or superior in all respects to that specified.
b. Will provide the same warranties for the proposed item as for the item specified.
c. Has determined that the proposed item is compatible with interfacing items.
d. Will coordinate installation of an approved item and make changes required in other elements of the work because of the substitution.
e. Waives claims for additional expenses that may be incurred as a result of the substitution.

F. Electronic Submittals: Identify and incorporate information in each electronic submittal file as follows:

1. Transmittal Form (CM-16): All submittals shall be transmitted using National Park Service Transmittal Form (CM-16). The form can be downloaded from the DSC Workflows website's Submittal Review page and completed on the NPS/DSC management software website. No action will be taken on a submittal item unless accompanied by this Transmittal Form.

   a. Complete the general information at the top of form.
   b. Provide all required information based on submittal type
   c. Attach all related documents.
   d. Sign the Contractor section at bottom of the Transmittal Form (CM-16).

2. Physical samples: Complete Transmittal Form (CM-16) on the NPS/DSC management software website as described above. Deliver physical sample to the Contracting Officer (or designee) on site for processing. All comments and actions will be documented on the Transmittal Form (CM-16) on the NPS/DSC management software website.

G. Identification: Submittal number or other unique identifier, including revision identifier.

1. Submittal number shall use a sequential number (e.g. .001). Re-submittals shall include alphabetic suffix after another decimal point (e.g. .001.A).

H. Re-submittals: Make re-submittals using same process used with initial submittal.

1. Note date and content of previous submittal.
2. Note date and content of revision in the title block on the Transmittal Form (CM-16) and clearly indicate extent of revision.
3. Re-submit submittals until they are marked "Approved" or "Approved with notations".

I. Distribution: Furnish copies of final submittals to manufacturers, subcontractors, suppliers, fabricators, installers, and others as necessary for performance of construction activities.

J. Use for Construction: Use only final submittals with mark indicating "Approved" or "Approved with notations". Ensure notations have been incorporated and, at a minimum, keep one copy of final approved submittal on site for use during construction.

1.4 CONTRACTOR'S USE OF CAD/BIM FILES

A. General: At Contractor's written request, copies of CAD (Computer Aided Design)files will be provided to Contractor for Contractor's use in connection with Project, subject to:

1. Files provided as is; no format or other changes to files or changes to objects in the drawing will be done by the Government.

2. CAD is not an official contract item and is provided for convenience only.

PART 2 - PRODUCTS

2.1 ACTION SUBMITTALS

A. Product Data: Collect information into a single submittal for each element of construction and type of product or equipment.

1. If information must be specially prepared for submittal because standard printed data are not suitable for use, submit as Shop Drawings, not as Product Data.
2. Mark each submittal to show which products and options are applicable.
3. As applicable, include:

a. Manufacturer's product specifications.
b. Manufacturer's installation instructions: When Contract Documents require compliance with manufacturer's printed instructions, provide one complete set of instructions to Contracting Officer and keep another complete set of instructions at the project site until substantial completion.
c. Manufacturer's catalog cuts: Submit only pertinent pages; mark each page of standard printed data to identify specific products proposed for use.
d. Wiring diagrams showing factory-installed wiring.
e. Printed performance curves.
f. Operational range diagrams.
g. Compliance with specified referenced standards.
h. Testing by recognized testing agency.

4. Submit product data in PDF (portable document format) file format before or concurrent with samples.

B. Shop Drawings: Prepare Project-specific information, drawn accurately to scale. Do not base Shop Drawings on reproductions of the Contract Documents or standard printed data, unless submittal of CAD/BIM Drawings is otherwise permitted.

1. Preparation: Fully illustrate requirements in Contract Documents. As applicable, include:

a. Dimensions
b. Identification of products
c. Fabrication and installation drawings
d. Shopwork manufacturing instructions
e. Templates and patterns
f. Schedules
g. Notation of coordination requirements
h. Notation of dimensions established by field measurement
i. Relationship to adjoining construction clearly indicated
j. Seal and signature of professional engineer if specified

2. Submit shop drawings as PDF electronic file

C. Samples: Submit Samples for review of kind, color, pattern, and texture for a check of these characteristics with other elements and for a comparison of these characteristics between submittal and actual component as delivered and installed.

1. Transmit Samples that contain multiple, related components such as accessories together in one submittal package.
2. Complete and post the Transmittal Form (CM-16) on the NPS/DSC management software website for processing and documentation of action on submitted samples.
3. Identification: Attach label on unexposed side of Samples that includes:

    a. Generic description of Sample
    b. Product name and name of manufacturer
    c. Sample source
    d. Submittal Number and title of appropriate Specification Section

4. Disposition: Maintain sets of approved Samples at Project site, available for quality-control comparisons throughout course of construction activity. Sample sets may be used to determine final acceptance of construction associated with each set.
5. Samples for Initial Selection: Submit manufacturer's color charts consisting of units or sections of units showing full range of colors, textures, and patterns available.

    a. Number of Samples: Submit **two** full set(s) of available choices where color, pattern, texture, or similar characteristics are required to be selected from manufacturer's product line. Contracting Officer will return with options selected.

6. Samples for Verification: Submit full-size units or Samples of size indicated, prepared from same material to be used for the Work, cured and finished in manner specified, and physically identical with material or product proposed for use, and that show full range of color and texture variations expected. Samples include: partial sections of manufactured or fabricated components; small cuts or containers of materials; complete units of repetitively used materials; swatches showing color, texture, and pattern; color range sets; and components used for independent testing and inspection.

    a. Number of Samples: Submit four sets of Samples. Contracting Officer will retain three Sample sets; remainder will be returned. Retain Sample set as a Project Record Sample.

D. Construction Materials: Contractor is encouraged to submit products made out of recycled or environmentally responsible material. Every effort will be made by National Park Service to approve these materials.

2.2 INFORMATIONAL SUBMITTALS

A. General: Prepare and submit Informational Submittals required by individual Specification Sections.

1. Post informational submittals as PDF electronic files directly to the NPS management software website.
2. Certificates and Certifications: Provide a notarized statement with signature of entity responsible for preparing certification. Certificates and certifications shall be signed by officer or other individual authorized to sign documents on behalf of that entity.
3. Informational submittals that do not comply with requirements specified in Contract Documents will be rejected and one copy will be returned.

B. Coordination Drawings: Comply with requirements specified in Section 01 31 00 "Project Management and Coordination."

C. Contractors Construction Schedule: Comply with requirements specified in Section 01 32 16 "Construction Schedule."

D. Accident Prevention Plan: Comply with requirements specified in Section 01 35 23 "Safety Requirements."

E. Schedule of Values: Comply with requirements specified in Section 01 32 16 "Construction Schedule."

F. Waste Recycling Plan: Comply with requirements specified in Section 01 74 19 "Construction Waste Management and Disposal."

G. Quality Control Plan: Comply with requirements specified in Section 01 40 00 "Quality Requirements."

H. Under-an-Acre Pollution Prevention Plan: Comply with requirements specified in Section 01 57 23 "Under-an-Acre Pollution Prevention" and storm water permit requirements identified in Section 01 31 00 "Project Management and Coordination."

I. Qualification Data: Prepare written information demonstrating capabilities and experience of firm or person. Include lists of completed projects with project names and addresses, names and addresses of architects and owners, and other information specified.

J. Installer Certificates: Prepare written statements on manufacturer's letterhead certifying Installer complies with Contract Documents and, where required, is authorized by manufacturer for this specific Project.

K. Manufacturer Certificates: Prepare written statements on manufacturer's letterhead certifying manufacturer complies with Contract Documents. Include evidence of manufacturing experience where required.

L. Product Certificates: Prepare written statements on manufacturer's letterhead certifying product complies with Contract Documents.

M. Material Certificates: Prepare written statements on manufacturer's letterhead certifying material complies with Contract Documents.

N. Material Test Reports: Prepare reports written by a qualified testing agency, on testing agency's standard form, indicating and interpreting test results of material for compliance with requirements in Contract Documents.

O. Product Test Reports: Prepare written reports indicating current product produced by manufacturer complies with requirements in Contract Documents. Base reports on evaluation of tests performed by manufacturer and witnessed by a qualified testing agency, or on comprehensive tests performed by a qualified testing agency.

P. Research/Evaluation Reports: Prepare written evidence, from a model code organization acceptable to authorities having jurisdiction, that product complies with building code in effect for Project.

Q. Preconstruction Test Reports: Prepare reports written by a qualified testing agency, on testing agency's standard form, indicating and interpreting results of tests performed before installation of product, for compliance with performance requirements in Contract Documents.

R. Compatibility Test Reports: Prepare reports written by a qualified testing agency, on testing agency's standard form, indicating and interpreting results of compatibility tests performed before installation of product. Include written recommendations for primers and substrate preparation needed for adhesion.

S. Field Test Reports: Prepare reports written by a qualified testing agency, on testing agency's standard form, indicating and interpreting results of field tests performed either during installation of product or after product is installed in its final location, for compliance with requirements in Contract Documents.

T. Maintenance Data: Prepare written and graphic instructions and procedures for operation and normal maintenance of products and equipment. Comply with requirements specified in Section 01 78 23 "Operation and Maintenance Data."

U. Design Data: Prepare written and graphic information, including: performance and design criteria, list of applicable codes and regulations, and calculations. Include list of assumptions and other performance and design criteria and a summary of loads. Include load diagrams if applicable. Provide name and version of software, if any, used for calculations. Include page numbers.

V. Manufacturer's Instructions: Prepare written or published information documenting manufacturer's recommendations, guidelines, and procedures for installing or operating a product or equipment. Include name of product and name, address, and telephone number of manufacturer.

W. Manufacturer's Field Reports: Prepare written information documenting factory-authorized service representative's tests and inspections. As applicable, include:

1. Statement on condition of substrates and their acceptability for installation of product.
2. Summary of installation procedures being followed, compliance with requirements and, if not, what corrective action was taken.
3. Results of operational and other tests and a statement of whether observed performance complies with the requirements.

X. Permit Compliance Products: Prepare required information for compliance with permit provisions. Products include written notification of project startup, suspension, and completion of work; photo documentation of site conditions; reports; and drawings.

PART 3 - EXECUTION

3.1 CONTRACTOR'S REVIEW

A. Review each submittal and check for coordination with other Work of Contract and for compliance with Contract Documents. Note corrections and field dimensions.

3.2 CONTRACTING OFFICER'S ACTION

A. General: Submittals will be disapproved without technical review if identification information is missing, not filled in, or if placed on back of submittal; an incorrect format of submittals is provided; transmittal form is incorrectly filled out; submittals are not coordinated; or submittals do not show evidence of Contractor's approval.

   1. Any work done or orders for materials or services placed before approval shall be at Contractor's own risk.

B. Action Submittals: Contracting Officer will review each submittal, generate comments on corrections or modifications required, and indicate appropriate action on the Transmittal Form (CM-16). Submittal will be marked as defined below:

   1. APPROVED: Acceptable with no corrections.
   2. APPROVED WITH NOTATIONS: Minor corrections or clarifications required. Comments are clear and no further review is required. Contractor shall address review comments when proceeding with the work.
   3. DISAPPROVED - RESUBMIT: Rejected as not in accordance with the contract or as requiring major corrections or clarifications. Contracting Officer will identify reasons for disapproval. Contractor shall revise and resubmit with changes clearly identified.

C. Informational Submittals: Contracting Officer will review each submittal and will either accept or reject it.

D. Partial submittals are not acceptable, will be considered non-responsive, and will be returned without review.

END OF SECTION 01 33 23

Submittal List: GOGA - 244458

National Park Service (NPS) - Denver Service Center (DSC) | 1-27-21

SUBMITTAL LIST

Park Acronym/Project Management Information System (PMIS) Number: **GOGA - 244458**

Project Title: **Construct and Install Improvements to West Bluff Trail/Arrival Area**

SUBMITTAL			REQUIREMENTS (Indicate with **X**)							
			INFORMATIONAL				ACTION			
SPECIFICATION SECTION	PARAGRAPH NUMBER	DESCRIPTION	CERTIFICATIONS OR LABORATORY TESTS	REPORTS OR CALCULATIONS OR PLAN	MANUFACTURER DATA AND INSTRUCTIONS	OTHER	SAMPLES	SHOP DRAWINGS	MANUFACTURER DATA AND INSTRUCTIONS	OTHER
013100	1.4.A	Coordination Drawings		X						
013100	1.4.C	Coordination Digital Data Files			X					
013100	1.4.D.1	Letter designating Project Superintendent		X						
013100	1.4.D.2	Construction Schedule		X						
013100	1.4.D.3	A Comprehensive Schedule of Values		X						
013100	1.4.D.4	Accident Prevention Plan		X						
013100	1.4.D.5	A List of Subcontractors for this project		X						
013100	1.4.D.6	Written statements from Subcontractors certifying compliance with applicable labor standard clauses		X						
013100	1.4.D.7	Certificates of Insurance or SF1413 for Contactor and all Subcontractors		X						
013100	1.4.D.8	Waste Management Plan		X						
013100	1.4.D.9	Quality Control Plan		X						
013100	1.4.D.10	Traffic Control Plan		X						
013100	1.4.D.11	Under-an-Acre Pollution Prevention Plan (UPPP)		X						
013100	1.4.D.14	List of Required Construction Permits		X						
013216	1.3.A	Electronic Copies		X						
013216	1.3.B	Schedule of Value		X						
013216	1.3.C	Construction Baseline Schedule		X						
013216	1.3.D	CPM Reports		X						
013216	1.3.E	Construction Schedule Updates		X						
013216	1.3.F	Construction Schedule Revisions		X						
013233	1.3.A	Construction Images							X	
013233	1.3.B	Closeout Submittals		X						
013513.22	1.3.A	Daily Work Schedule		X						
013523	1.3.A	Accident Prevention Plan		X						
01 35 40	1.3	As-builts		X						
013550	1.5.A.1.a	Spill Prevention and Response Plan		X						
013550	1.5.A.1.b	MSDS							X	
013550	1.5.A.1.c	Under-an-Acre Pollution Prevention Plan		X						
013550	1.5.A.1.d	Hazardous Materials Spill Prevention and Response Plan		X						

SUBMITTAL LIST

Park Acronym/Project Management Information System (PMIS) Number: **GOGA - 244458**

Project Title: **Construct and Install Improvements to West Bluff Trail/Arrival Area**

SUBMITTAL			REQUIREMENTS (Indicate with **X**)							
			INFORMATIONAL				ACTION			
SPECIFICATION SECTION	PARAGRAPH NUMBER	DESCRIPTION	CERTIFICATIONS OR LABORATORY TESTS	REPORTS OR CALCULATIONS OR PLAN	MANUFACTURER DATA AND INSTRUCTIONS	OTHER	SAMPLES	SHOP DRAWINGS	MANUFACTURER DATA AND INSTRUCTIONS	OTHER
013591	1.3.A	Historic Preservation Treatment Plan (HPTP)		X						
013591	1.3.B	Alternative Methods and Materials		X						
013591	1.3.C	Photographs or Videotape		X					X	
014000	1.4.A	Quality Control Plan		X						
014000	1.4.B	Qualification Data		X						
014000	1.4.C	Contractor Quality Control (CQC) Daily Reports		X						
014000	1.4.D	Test Reports		X						
014000	1.4.E	Accessibility Inspection report		X						
014000	1.4.F	Off-Site Inspection Reports		X						
014000	1.4.H	Permits, Licenses, and Certificates	X							
015719	1.4.B	Product Data			X					
015719	1.4.C	Inspection and Test Reports	X							
015723	1.3.C	Inspection Schedule		X						
015723	1.3.D	Erosion Control Products							X	
016700	1.3.A	Record Submittals		X						
017340	1.2.A	Certificates	X							
017340	1.2.B	Landfill Receipts		X						
017340	1.2.C	Certified Surveys		X						
017340	1.2.D	Quantity Surveys		X						
017419	1.4.A	Waste Management Plan		X						
017419	1.4.B	Progress Documentation		X						
017419	1.4.C	Waste Reduction Calculations		X						
017419	1.4.D	Records of Donations		X						
017419	1.4.E	Records of Sales		X						
017419	1.4.F	Recycling and Processing Facility Records		X						
017419	1.4.G	Landfill and Incinerator Disposa Records		X						
017419	1.4.I	Qualification Data	X							
017419	1.4.K	Progress payment requirements		X						
017419	1.4.L	Closeout Submittals		X						
017700	1.3.A.2	Project Record Documents		X						
017700	1.3.A.3	Environmental Record Docuemnts		X						
017700	1.3.A.4	Operating Instructions			X					
017823	1.2.A	Manual		X						
017900	1.3.A	Instruction Program		X						
017900	1.3.B	Demonstration and Training Video		X						

SUBMITTAL LIST

Park Acronym/Project Management Information System (PMIS) Number: **GOGA - 244458**

Project Title: **Construct and Install Improvements to West Bluff Trail/Arrival Area**

SUBMITTAL			REQUIREMENTS (Indicate with **X**)							
			INFORMATIONAL				ACTION			
SPECIFICATION SECTION	PARAGRAPH NUMBER	DESCRIPTION	CERTIFICATIONS OR LABORATORY TESTS	REPORTS OR CALCULATIONS OR PLAN	MANUFACTURER DATA AND INSTRUCTIONS	OTHER	SAMPLES	SHOP DRAWINGS	MANUFACTURER DATA AND INSTRUCTIONS	OTHER
033000	1.4 A	Product Data			x					
033000	1.4.B	Shop Drawings		x						
033000	1.4.C	Mill Test Reports	x							
033000	1.4.D	Manufacturer Certificates			x					
033000	1.4.E	Concrete Mix Design		x						
033000	1.4 F	Qualification Data	x							
311000	1.4 A 1	Permits for transport of debris		x						
311000	1.4 A 2	Demolition procedures			x					
311000	1.4 A 3	Product Data							x	
312000	1.4.A	Delivery Tickets	x							
312000	1.4.B.1	Product Data							x	
312000	1.4.B.2	Product Data							x	
312000	1.4.C	Material Test Reports		x						
312000	1.4.D	Compaction Test Results	x							
312000	1.4.E	Preexcavation Photography or Videotape		x						
312000	1.4 F	Concrete Wall Excavation and Backfill Plan		x						
312500	1.3.A.1	Product Data - Silt Fence							x	
312500	1.3.A.2	Product Data - Wattles							x	
312500	1.3.A.3	Product Data - Erosion Control Blanket							x	
312500	1.3.A.4	Product Data - Rock for temporary const entrance							x	
312500	1.3.A.5	Product Data - Inlet protection							x	
321216	1.3.A	Traffic Control		x						
321216	1.3.B	Product Data							x	
321216	1.3.C	Test Reports	x							
321320	1.3.A	Product Data							x	
321320	1.3.B	Design Mixtures		x						
321320	1.3.C	Steel Reinfrocement Shop Drawings						x		
321320	1.3.D	Qualification Data	x							
321320	1.3.E	Material Certificates	x							
321320	1.3.F	Joint Plan						x		
321320	1.3.G	Materials test report		x						
321320	1.3.H	Field quality control reports		x						
321320	1.3 I	Colored concrete samples					x			
321320	3.12	Accessibility inspection report		x						
321400	1.3 A	Product data							x	
321400	1.3 B	Samples for initial selection					x			
321400	1.3 C	Samples for verification					x			
321400	1.4 A	Mockups								x
321700	1.2 A	Material Certificates	x					x		
321700	1.2.B	Product Data							x	

SUBMITTAL LIST

Park Acronym/Project Management Information System (PMIS) Number: **GOGA - 244458**

Project Title: **Construct and Install Improvements to West Bluff Trail/Arrival Area**

SUBMITTAL			REQUIREMENTS (Indicate with **X**)							
			INFORMATIONAL				ACTION			
SPECIFICATION SECTION	PARAGRAPH NUMBER	DESCRIPTION	CERTIFICATIONS OR LABORATORY TESTS	REPORTS OR CALCULATIONS OR PLAN	MANUFACTURER DATA AND INSTRUCTIONS	OTHER	SAMPLES	SHOP DRAWINGS	MANUFACTURER DATA AND INSTRUCTIONS	OTHER
321700	1.2 C	Maintenance Data			x					
334000	1.2.A	Product Data							x	
334000	1.2.B	Manufacturer's Certification							x	
347113	1.2 A	Product data							x	
347113	1.2 B	Shop drawings						x		
347113	1.2 C	Qualifications		x						

Submittal List: FOPO - 186401

National Park Service (NPS) - Denver Service Center (DSC) | 1-27-21

SUBMITTAL LIST

Park Acronym/Project Management Information System (PMIS) Number: **FOPO 186401**

Project Title: **Widen and Reconstruct Long Avenue for Safer Multi-Modal Access**

SUBMITTAL			REQUIREMENTS (Indicate with **X**)							
			INFORMATIONAL				ACTION			
SPECIFICATION SECTION	PARAGRAPH NUMBER	DESCRIPTION	CERTIFICATIONS OR LABORATORY TESTS	REPORTS OR CALCULATIONS OR PLAN	MANUFACTURER DATA AND INSTRUCTIONS	OTHER	SAMPLES	SHOP DRAWINGS	MANUFACTURER DATA AND INSTRUCTIONS	OTHER
017700	1.3	Closeout submittals			x	x			x	
033053	1.3	Joint filler							x	
		Joint sealant							x	
		Concrete admixtures							x	
		Concrete curing compounds							x	
		Aggregate							x	
		Color additive							x	
		Concrete mix design		x					x	
260500	1.3	Products							x	
311400	1.5	Photographs and video of existing conditions			x					
312213	1.3	Soil amendment recommendations report							x	
		Test reports, import soils	x							
		Certificates for backfill material	x							
312333	1.2	Certificates for backfill material	x							
		Certificate of compliance for pipe bedding material	x							
		Independent testing report	x							
		Utility marking tape sample					x			
321116	1.2	Product data for base course	x							
		Test results	x							
		Field density tests	x							
321213	1.2	Test results	x							
321216	1.3	Mix design							x	
321240	1.3	Stone cobble sample					x			
321723	1.2	Product data for traffic stripes and markings					x			
323100	1.2	Product data sheets							x	
	1.3	Maintenance data				x				
	2.1	Access Control data sheet			x				x	
	2.2	Key-Pad Support Arm/Pedestal data sheet			x				x	
	2.3	Plastic Bollard data sheet			x				x	
	2.4	Metal Bollard data sheet			x				x	
	2.5	Wheel Stop data sheet			x				x	
	2.6	Sign Post and Panel data sheets			x				x	

SUBMITTAL LIST

Park Acronym/Project Management Information System (PMIS) Number: **FOPO 186401**

Project Title: **Widen and Reconstruct Long Avenue for Safer Multi-Modal Access**

SUBMITTAL			REQUIREMENTS (Indicate with **X**)							
			INFORMATIONAL				ACTION			
SPECIFICATION SECTION	PARAGRAPH NUMBER	DESCRIPTION	CERTIFICATIONS OR LABORATORY TESTS	REPORTS OR CALCULATIONS OR PLAN	MANUFACTURER DATA AND INSTRUCTIONS	OTHER	SAMPLES	SHOP DRAWINGS	MANUFACTURER DATA AND INSTRUCTIONS	OTHER
323113	1.4	Product data sheets							x	
334413	1.3	Product data sheets							x	
347113	1.2	Mill reports							x	
		Sample of cable					x			
	1.3	Maintenance data	x							

SECTION 01 34 00 - NATURAL HABITAT REQUIREMENTS

PART 1 - GENERAL

1.1 SUMMARY

A. The work of this section consists of protecting natural resources in the Golden Gate National Recreation Area.

B. Work activities shall be conducted in a manner to avoid impacts outside of work zones and to reduce impacts within the steeps slopes adjacent to the proposed trail, the drainage swale, and below the proposed wall systems.

C. Related Requirements:
   1. Section 01 50 00 "Temporary Facilities and Controls" for products and execution of barricades.
   2. Section 01 57 23 "Under-an-Acre Pollution Prevention Plan" for UPPP requirements.

1.2 RESOURCE PROTECTION SURVEYS

A. A minimum of 30 days prior to project start up, the Contractor shall meet with the Contracting Officer's Representative (COR) and the NPS-approved qualified biologist (Biologist). During the onsite meeting, the COR, Contractor, and Biologist shall discuss:

   1. The Contractor Proposed Start Date and Duration

   2. Equipment and special methods to be used in natural resource sensitive areas

B. Based on the Contractor Proposed Start Date and Duration, the NPS-approved Biologist will complete the surveys necessary and assist in placement of flagging and fencing to demarcate avoidance areas for the project site.

C. Within 15 days of the Contractor/Biologist meeting, the Contractor shall provide a proposed project schedule, which takes into account the recommendations outlined by the Biologist.

1.3 SUBMITTALS

A. Daily Work Schedule: 15 days before start of ground-disturbing site work, submit a Daily Work Schedule, detailing construction work in natural resource areas.
   1. Key schedule to drawings and include the following information.
      a. Starting and ending dates of ground-disturbing construction.
      b. Locations of temporary facilities, such as barriers (including wildlife exclusion fencing), field offices, staging areas, sanitary facilities, and haul and access roads.
      c. Types of construction, such as tree removal, clearing, topsoil stripping, structure or trench excavation, landscaping, and post construction clean-up

d. Methods and equipment used for each type of construction.
e. Plan for relocating work in the event of temporary work stoppages at each natural resource area.

1.4 START-UP MEETING

A. The Contractor and all personnel shall be required to attend a start-up meeting, separate from the Preconstruction Conference noted in Section 01 30 00, in which all personnel are trained by the NPS regarding the following:
1. Work within a National Park.
2. Protection of sensitive species and habitats, including conservation measures.
3. Measures to prevent the spread of invasive plants and pathogens (including cleaning of equipment and other gear)
4. Erosion Control Implementation.
5. Coordination of required temporary fencing.
6. Dust control during construction.
7. Working with wildlife – avoidance of feeding, not approaching or disturbing, preventing wildlife access to trash, etc.
8. Other appurtenant personnel education.
9. Natural Resource Point of Contacts
10. The Contractor shall provide at least two hours of Erosion and Sediment Control training to its workers. Training shall include a review of the requirements of the project UPPP and be led by the project Qualified SWPPP Developer (QSD) and Qualified SWPPP Practitioner (QSP). The qualifications of the QSD and QSP must be submitted to the COR five days prior to the training for approval.

PART 2 - – PRODUCTS

2.1 BARRICADES. Per Section 01 50 00 “Temporary Facilities and Controls”.

PART 3 - – EXECUTION

3.1 BARRICADES

A. Construct as specified in Section 01 50 00

B. Locate as directed by COR.

3.2 RAPTOR NESTS

A. The park protects native raptors and follows the Migratory Bird Treaty Act prohibiting the take of migratory birds, nests, or bird parts. Tree removal should be scheduled from August 1-December 31 to avoid the raptor nesting season from January 1-July 31. Work from January 1—February 28 would be considered on a case by case basis and would require a raptor nest survey to insure that project actions would not adversely nesting raptors. Tree removal from March 1—July 31 would follow guidance below in 3.3 NESTING / MIGRATORY BIRD.

3.3 NESTING / MIGRATORY BIRDS

The park protects native bird species and adheres to the Migratory Bird Treaty Act, prohibiting the take of migratory birds, nests, or bird parts. Any removal (including mowing and tree-trimming) of landscaped, non-native or native vegetation shall follow park guidelines for protection of nesting birds. Vegetation removal should be scheduled from August 1—February 28 to avoid the landbird nesting season from March 1—July 31. Cut vegetation should be maintained at low stature (less than eight inches) during the breeding season to preclude birds from nesting in these areas. Nest protection includes cliff swallows or other migratory birds nesting on or in buildings. Bird exclusion measures, such as temporary netting, would also be considered for implementation prior to the start of nesting season.

3.4 VEGETATION

A. In areas where vegetation will be disturbed by contract work, the Contractor shall identify such areas in advance to the COR and mutually agree on minimum disturbance areas. An NPS-approved qualified Biologist shall approve vegetation removal areas. Removal of native vegetation shall be minimized where possible, and the footprint of the construction impact shall be minimized to only essential areas of clearing.

3.5 WORK STOPPAGE

A. The Contractor shall plan, schedule, and execute the work to prevent stoppages at one area from stopping all work at the construction site.

3.6 INVASIVE PLANTS

A. All vehicles, tools and equipment shall be cleaned of dirt and vegetative material prior to entering the work site each day and at the end of each workday.

B. Any trucks or equipment driving from one work zone to another that requires passing through any areas with weeds shall take measures to prevent the spread of weed seeds via truck tires or tracks

3.7 WATER RESOURCES

A. Wetlands: The park protects wetlands under numerous laws and policies including the 1972 Clean Water Act and Executive Orders 11988 (Floodplain Management) and 11990 (Protection of Wetlands). For work in or near wetlands, the Contractor is responsible for complying with additional precautions to avoid and minimize impacts. The Contractor shall not enter, disturb, destroy, or allow discharge of contaminants into any wetlands without specific authorization from the park and permits from other regulatory agencies. Authorization to enter specific wetlands shall not relieve the Contractor from any obligation to protect other wetlands within, adjacent to, or in the vicinity of the construction site and associated boundaries. Heavy equipment shall not be used in wetlands except as specifically authorized by permits.

B. Storage or staging areas for equipment, materials, chemicals, etc. shall be located as far away as is practical from creek, wetland, or protected areas.

END OF SECTION 01 34 00

GOGA-244458 / FOPO-186401

SECTION 01 35 13.22 – ARCHEOLOGICAL PROTECTION

PART 1 - GENERAL

1.1 SUMMARY

A. Section consists of protecting archeological resources contained in soil deposits.

1.2 DEFINITIONS

A. Archeological Resources: Archeological resources are physical evidences of past human activity, including evidences of effects of that activity on the environment. Archeological resources represent both prehistoric and historic time periods, found above and below ground and under water.

B. Archeologically Sensitive Areas: Areas having potential to contain significant (National Register eligible) archeological resources. If National Register eligible or listed archeological resources could not be avoided, an appropriate mitigation strategy would be developed in consultation with state historic preservation officer and, if necessary, associated American Indian tribes.

C. Non-sensitive Areas: Areas with little potential of containing significant (National Register eligible) archeological resources.

D. Archeological Monitor: Representative of Government designated to oversee construction activities that could disturb archeological resources.

E. Archeological Resources Protection Act (ARPA) of 1979 (Public Law (P.L.) 96-95; 93 United States Statues at Large (Stat.) 712): defines archeological resources as any material remains of past human life or activities that are of archeological interest and at least 100 years old; Section 4 of the statute describes the requirements that must be met before Federal authorities can issue a permit to excavate or remove any archeological resource on Federal or Indian lands; the curatorial requirements of artifacts, and other materials excavated or removed.

1.3 SUBMITTALS

A. Daily Work Schedule: Detail construction work in archeologically sensitive areas. Submit to Contracting Officer (CO) 30 days before start of ground disturbing site work.

1.4 QUALITY ASSURANCE

A. At least one week before on-site work begins, Contractor shall meet with Contracting Officer and Archeological Monitor to discuss Daily Work Schedule, equipment, and special methods used in archeologically sensitive areas. Contractor shall ensure approved Daily Work Schedule is followed throughout construction.

PART 2 - PRODUCTS

2.1 DAILY WORK SCHEDULE

A. Daily Work Schedule is required for work occurring within archeologically sensitive areas. Include all work that is to occur within the area and key the schedule to the drawings to include:

1. Starting and ending dates of ground-disturbing construction.
2. Locations of temporary facilities, such as barriers, field offices, staging areas, sanitary facilities, borrow pits, and haul and access roads.
3. Types of construction, such as clearing, topsoil stripping, structure or trench excavation, landscaping, and post construction clean-up.
4. Methods and equipment used for each type of construction.
5. Plan for relocating work in the event of temporary work stoppages at each archeologically sensitive area

PART 3 - EXECUTION

3.1 BARRICADES

A. Comply with requirements specified in Section 01 50 00 "Temporary Facilities and Controls."

3.2 ARCHEOLOGICAL INVESTIGATION BY NON-NPS PERSONNEL

A. A permit is required for archeological investigations (e.g. excavation, shovel testing, coring, pedestrian survey, underwater archeology, rock art documentation, or other types of reconnaissance including archaeological monitoring of construction) carried out on parklands by non-National Park Service (NPS) personnel, unless carried out under a contract or a cooperative agreement specifically written for archeological investigations. Permits are issued under the Archaeological Resources Protection Act of 1979 (ARPA). The NPS does not issue a permit for archeological investigations carried out by NPS archeologists, or to archeologists working on NPS archeological projects under a contract or cooperative agreement.

B. Applicants should submit a Permit Application (DI Form 1926 (Revision September 2004) Office of Management and Budget (OMB) Number (No.) 1024-0037, approved through 1/31/2008. Permit Application form is available, in PDF (portable document file) format, to the manager of the park in which they propose to work; or to the regional director, with a copy to the park manager.

3.3 OBSERVATION

A. Archeological Monitor will observe ground-disturbing site work, including construction of temporary facilities, at archeologically sensitive areas, from a safe location mutually agreed on by Contractor and Monitor. As new ground is broken, Monitor will examine excavated materials, using construction layout centerline and perimeter staking as a reference point to record locations of findings.

3.4 DISCOVERY OF RESOURCES

A. If Archeological Monitor discovers resources, immediate relocation of work to a non-sensitive area may be required for Monitor to identify and document resources and, if necessary, develop appropriate mitigation plan. While Archeological Monitor is documenting resources in sensitive areas, Contractor shall relocate work to non-sensitive areas where monitoring is not normally required.

B. If resources are discovered while Archeological Monitor is absent, stop work immediately and report the discovery to the Contracting Officer.

3.5 WORK STOPPAGE

A. Contractor shall plan, schedule, and execute work to prevent stoppages at one area from stopping all work at construction site.

END OF SECTION 01 35 13.22

GOGA-244458 / FOPO-186401

SECTION 01 35 23 - SAFETY REQUIREMENTS

PART 1 - GENERAL

1.1 SUMMARY

A. Section includes establishing an effective accident prevention program and providing a safe working environment for personnel and visitors.

1.2 SUBMITTALS

A. Accident Prevention Plan (APP): Submit APP after contract award and before Pre-Construction conference. Contracting Officer (CO) will review proposed APP. If APP requires any revisions or corrections, Contractor shall resubmit Plan within 10 days. No progress payments will be made until the APP is accepted.

1.3 QUALITY ASSURANCE

A. Comply with contract clauses "Accident Prevention" and "Permits and Responsibilities." In case of conflicts between Federal, State, and local safety and health requirements, the most stringent shall apply. Onsite equipment shall meet 29 CFR 1926 (Code of Federal Regulations) (Occupational Safety and Health Administration (OSHA)) requirements. Failure to comply with requirements of this section and related sections may result in suspension of work.

B. Site Safety Supervisor:

1. Designate authorized onsite representative for preparation and maintenance of the APP.
2. Shall be responsible for:

    a. Implementation and enforcement of the APP
    b. Daily safety inspections
    c. Conducting and documenting weekly and monthly safety meetings
    d. Review of safety requirements at progress meetings
    e. Compilation and maintenance of Safety Data Sheets (SDS) and safety reference materials
    f. Tracking and resolution of safety violations
    g. Site personnel and visitor compliance with site safety and health requirements and APP
    h. Investigation and reporting of accidents and injuries

C. Qualifications of Employees:

1. Physically and able to perform their assigned duties in a safe manner.
2. Do not allow employees whose ability or alertness is impaired because of prescription or illegal drug use, fatigue, illness, intoxication, or other conditions that may expose themselves or others to injury to perform work.
3. Provide operating instructions for equipment. Operators of vehicles, hoisting equipment, and hazardous plant equipment shall be able to understand signs, signals, operating instructions, and be fully capable of operating such equipment. Retain copies of operator licenses and certifications onsite.

1.4 ACCIDENT REPORTING

A. Reportable Accidents: Defined as: death, occupational disease, and/or traumatic injury to employees or the public; fires; and/or property damage by accident in excess of $100.

1. Notify Contracting Officer immediately in the event of a reportable accident.
2. Fill out and forward an Accident/Property Damage Report Form (CM-22) to Contracting Officer within 7 days of a reportable accident. Obtain form from Contracting Officer.

1.5 RESOURCES

A. COVID-19 (Coronavirus Disease 2019) information provided below is not intended to provide a complete analysis of requirements for Contractor and is provided as a courtesy.
1. Coronoavirus.gov
2. Occupational Safety and Health Administration (United States Department of Labor) - COVID-19
3. Center for Disease Control (CDC)
   a. Get the Facts About Coronavirus
   b. What Construction Workers Need to Know about COVID-19
4. Federal Emergency Management Agency (FEMA) - Coronavirus (COVID-19) Response
5. National Park Service (NPS) - NPS Public Health Update

PART 2 - PRODUCTS

2.1 ACCIDENT PREVENTION PLAN (APP)

A. APP shall be written to comply with OSHA and project requirements (generic plan is not acceptable) including but not limited to:

1. Name and qualifications of supervisor responsible to carry out program.
2. Weekly and monthly safety meetings shall be documented with topics and attendees.
3. First aid and rescue procedures.
4. Job Hazard Analysis (JHA) for each major phase. List of hazards associated and methods proposed to provide for property protection and safety of the public, National Park Service personnel, and Contractor's employees. Include initial and continuing training.
5. Planning for possible emergency situations, as detailed in Article 1.2. Such planning shall take nature of construction, site conditions, and degree of exposure of persons and property into consideration.

6. Infectious Disease Preparedness:

   a. Contractors are responsible for their employees' safety and the safety of job site visitors during the performance of this contract. We encourage Contractors to follow guidance from the Department of Labor (DOL), Occupational Safety and Health Administration (OSHA), the Centers for Disease Control and Prevention (CDC), and all other applicable local, city, and state mandates. We encourage Contractors to develop policies for infection prevention and an Infectious Disease Preparedness and Response Plan.
   b. To the extent appropriate, Contractors should include the protective health and safety measures they intend to implement in any accident prevention or safety submittals required under this contract. These plans should contain preventive measures the Contractor intends to follow while performing work on government property as well as responsive and corrective actions to be taken if an employee exhibits symptoms or tests positive for contagion.
   c. Upon contract award, Contractors should communicate with Contracting Officer regarding Contractor decisions and actions to protect the health and safety of workers for the duration of contract performance under which pandemic conditions exist.

2.2 FIRST AID FACILITIES

A. Provide adequate facilities for number of employees and appropriate to construction hazards.

2.3 PERSONNEL PROTECTIVE EQUIPMENT (PPE)

A. Selection shall conform to OSHA Subpart E.

PART 3 - EXECUTION

3.1 DAILY SAFETY INSPECTIONS

A. Conduct daily safety inspections and maintain daily safety reports which include:
   1. Area/operation inspected
   2. Date of inspection
   3. Identified hazards
   4. Corrective actions taken

3.2 EMERGENCY INSTRUCTIONS

A. Post telephone numbers and reporting instructions for ambulance, physician, hospital, fire department, and police in conspicuous locations at work site.

3.3 FIRE AND LIFE SAFETY

A. Comply with requirements of National Fire Protection Association (NFPA) 241 (Standard for Safeguarding Construction, Alteration, and Demolition Operations).

3.4 HAZARDOUS MATERIALS

A. Hazardous materials: Explosive, flammable, poisonous, corrosive, oxidizing, irritating, or otherwise harmful substances that could cause death or injury.

B. Store hazardous materials in accordance with manufacturer's and OSHA Subpart D requirements. Maintain Safety Data Sheets (SDS) for each chemical readily available on site.

1. Immediately report spills of hazardous materials to the Park.
2. Maintain a spill emergency response kit.
3. Train employees how to respond to a spill and use emergency response kit.

3.5 PROTECTIVE EQUIPMENT

A. Inspect personal protective equipment daily and maintain in a serviceable condition. Clean, sanitize, and repair personal items as appropriate before issuing to another individual.

3.6 SAFETY MEETINGS

A. As a minimum, conduct one weekly 15-minute "toolbox" safety meeting conducted by a foreman or supervisor and attended by construction personnel at worksite. Topics shall coincide with work scheduled for following week. Document and submit meeting minutes to Contracting Officer within one day after meeting.

B. Conduct monthly safety meetings for personnel, contractors, and subcontractors performing work on the site. Notify Contracting Officer of meeting dates and times. Meetings shall be used to: review effectiveness of Contractor's safety effort; resolve current health and safety problems; provide a forum for planning safe construction activities, and for updating Accident Prevention Plan. Contracting Officers Representative will attend meetings and enter results of meetings into the daily log.

3.7 HARD HATS AND PROTECTIVE EQUIPMENT AREAS

A. A hard hat use area shall be designated by Contractor. Hard hat area shall be posted by Contractor in a manner satisfactory to Contracting Officer.

B. It is Contractor's responsibility to require persons working on or visiting site to wear hard hats and PPE in good repair at all times. As a minimum, maintain [**six**] <**Insert number**> hard hats and other APP required equipment.

3.8 TRAINING

A. First Aid: Provide training to personnel to ensure prompt and efficient first aid.

B. Hazardous Material: Train and instruct each employee exposed to hazardous material in safe and approved methods of handling and storage.

END OF SECTION 01 35 23

SECTION 01 35 40 – SOILS MANAGEMENT

PART 1 - GENERAL

1.1 SUMMARY

A. This Section describes requirements on managing soil materials including disposal of excess soils and importing soil materials, proper staging and stockpiling methods

B. Excavated Soil and Stockpile management includes but is not limited to preparing and maintaining stockpile areas as needed, transferring soils from active excavation areas to stockpiles or active loading zones, final loading into haul trucks, and any additional interim handling between excavation and transportation offsite.

C. Transfer of soils to and from the active excavation areas to the designated stockpile area approved by CO may be achieved using equipment approved by the CO, such as belt style conveyor, off road track dump trucks, Morooka Carriers, and small trucks. Contractor may submit other means and methods for soil transfer and conveyance subject to CO approval.

D. Related Requirements:

1. Section 01 24 00 “Natural Habitat Requirements” for invasive species control.
2. Section 01 50 02 “Trucking” for disposal or removal of non-contaminated soils and off-hauling soil materials.
3. Section 31 20 00 “Earth Moving” for fill material requirements and off-hauling soil materials.

1.2 DEFINITIONS

1. Earth materials include all types of soil and rock used for backfilling, recontouring for habitat or historic restorations, top-dressing for revegetation areas, rock for structural purposes, and aggregate for road and trail tread. All rock and soil that is generated during construction from activities such as excavation and scraping are also earth materials. Some commonly used EM definitions:
2. Aggregate Base Rock: Typically composed of crushed rock particles that fit through a ¾inch screen, this includes fine particles. Most often used to form a solid base for roads, parking areas, trails, structures, etc. Aggregate base rock is tested differently than drain rock or big rock.
3. Drain Rock: Clean aggregate most often used for drainage, it applies to rocks of different sizes and should have minimal fines.
4. Fines: Very small soil particles that can pass through a #200 sieve, or 75 ug.
5. Rip Rap: Large rock used for drainage, erosion control, and structural purposes.
6. Class Il Designated Landfill Waste. Soil which cannot be reused onsite, but is not classified as a hazardous waste under federal or State law

1.3 SUBMITTALS

A. Close Out Submittals - Provide As-Builts showing placement location of all imported materials,

PART 2 - PRODUCTS

2.1 IMPORTED FILL

Meet the following standards for import fill material:

1. Shall be free of organic matter, trash. concrete rubble and other deleterious material.
2. Shall be uncontaminated by regulated materials

B. Conform to the following chemical limit requirements for import fill material:

Constituent	Limit	Units
Inorganic Chemical Constituents		
Antimony	5	mg/kg
Arsenic	5.4	mg/kg
Barium	320	mg/kg
Beryllium	10	mg/kg
Cadmium	0.8	mg/kg
Chromium	140	mg/kg
Cobalt	21	mg/kg
Copper	49	mg/kg
Cyanide	2,500	mg/kg
Lead	160	mg/kg
Tetraethyl Lead	0.013	mg/kg
Mercury	0.4	mg/kg
Molybdenum	12	mg/kg
Nickel	110	mg/kg
Selenium	0.5	mg/kg
Silver	2	mg/kg
Thallium	1	mg/kg
Vanadium	74	mg/kg

Zinc	60	mg/kg
Semivolatile Organic Compounds		
Acenaphthene	30	mg/kg
Acenaphthylene	30	mg/kg
Anthracene	30	mg/kg
Benzo(a)anthracene	0.46	mg/kg
Benzo(a)pyrene	0.046	mg/kg
Benzo(b)fluoranthene	0.46	mg/kg
Benzo(g,h,i)perlene	30	mg/kg
Benzo(k)fluoranthene	4.6	mg/kg
BenzyAlcohol	1	mg/kg
Chrysene	30	mg/kg
Dibenzo(a,h,)anthracene	0.046	mg/kg
Dibenzofuran	2,200	mg/kg
Fluoranthene	30	mg/kg
Fluorene	30	mg/kg
Indeno(1,2,3)pyrene	0.46	mg/kg
2-Methylnaphthalene	30	mg/kg
4-Methylphenol (p-Creso)	50	mg/kg
Naphthalene	30	mg/kg
n-Nitrosodiphenylamine	20	mg/kg
Pentachlorophenol	3	mg/kg
Phenanthrene	30	mg/kg
Phenol	30	mg/kg
Pyrene	30	mg/kg
Volatile Organic Compounds		
Acetone	0.24	mg/kg
2-Butanone (MEK)	3.8	mg/kg
CarbonDisulfide	200	mg/kg

1,4-Dichlorobenzene	0.59	mg/kg
p-Isopropyltoluene (p-cymene)	130	mg/kg
MethyleneChloride	0.076	mg/kg
1,2.3-Trichlorobenzene	15	mg/kg
1,2.4-Trichlorobenzene	15	mg/kg
Trichlorofluoromethane	80	mg/kg
1,1,1-Trichloroethane	8	mg/kg
PolychlorinatedBiphenols (PCBs) Pesticides and Herbicides		
PCBs(Arochlor1254)	0.033	mg/kg
Aldrin	0.0039	mg/kg
alpha-BHC	0.062	mg/kg
beta-BHC	0.062	mg/kg
delta-BHC	0.062	mg/kg
Chlordane	0.009	mg/kg
2,4-D	0.025	mg/kg m 1k
Dicamba	0.01	mg/kg
4,4'-DDD	0.049	mg/kg
4,4'-DDE	0.098	mg/kg
4,4'-DDT	0.0082	mg/kg
Dieldrin	0.039	mg/kg
Endosulfan	1.1	mg/kg
Endosulfansulfate	1.1	mg/kg
Endrin	0.004	mg/kg
Endrinaldehyde	0.004	mg/kg
Endrinketone	0.004	mg/kg
gamma-BHC (Lindane)	0.01	mg/kg
Heptachlor	0.017	mg/kg
Heptachlorepoxide	0.017	mg/kg
Isodrin	0.0039	mg/kg
MCPP	5	mg/kg

Methoxychlor	0.44	mg/kg
Petroleum Hydrocarbons and Constituents		
TPH (as diesel)	100 (a)	mg/kg
TPH (as gasoline)	100(a)	mg/kg
TPH (as fuel oil/motor oil)	100(a)	mg/kg
Benzene	0.005(a)	mg/kg
Ethylbenzene	0.005(a)	mg/kg
Toluene	0.005(a)	mg/kg
TotalXylenes	0.005(a)	mg/kg
Dioxins/Furans		
2,3,7,8-TCDD		

Notes:

(a) From California Regional Water Quality Control Board, San Francisco Bay Region Order No,R2-20030080

C. All proposed testing of potential import material shall be consistent with testing requirements of The California Department of Toxic Substances Control, including the DTSC Fact Sheet. Information Advis01Y, Clean Imported Fill Material, October 2001.

D. The following materials have been previously tested and are accepted by NPS for use under this contrac.t without further chemical testing pursuant to this specification.

Source/Quarry Name	Address	Pre-approved product
Mark West Quarry	4611 Porter Creek Road Santa Rosa CA 95404	AB Rock (and products with similar size gradations)
Stony Point Quarry	7171 Stony Point Road Cotati CA	AB Rock (and products with similar size gradations
San Rafael Quarry	1000 Point San Pedro Road San Rafael CA 94901	Drain Rock (greater than 3/4"),Rip Rap
Broadmoor Landscape Supply	1350 El Camino Real South San Francisco, CA 94080	Soil (from Brisbane Quarry)

PART 3 - EXECUTION

3.1 Testing Imported Soil:

A. All proposed testing of potential import material shall be consistent with testing requirements of The California Department of Toxic Substances Control (DTSC), including the DTSC Fact Sheet. Information Advis01Y, Clean Imported Fill Material, October 2001.

B. The Contractor shall ensure that all environmental sampling work is conducted and supervised by individuals and/or a subcontract firm holding the appropriate and applicable technical and professional credentials and/or licenses required by the State of California as necessary.

C. The Contractor shall ensure that any environmental sampling the contractor conducts follows EPA, California and American Society of Testing and Materials protocols and guidance

D. A sampling plan will be prepared and submitted to the CO for approval prior to collection and analysis of any samples of proposed import materials for any materials not already listed as pre-approved.

3.2 Invasive Species Control

A. Refer to section 01 24 00 Natural Habitat Requirements.

3.3 Staging and Stockpiling

A. Stockpile Location(s):
   1. Identify locations within the construction staging areas as shown.
   2. Obtain approval for staging and stockpile locations with CO prior to setup.

B. Stock Pile requirements: Coordinate stock pile requirements and locations with NPS CO.

3.4 Reuse of Non-contaminated Excavated Soil Materials within the GGNRA:

A. See section 31 20 00 Earth Moving for fill material requirements.

3.5 Disposal of excess soils:

A. Off-hauling soil materials
   1. See section 01 50 02 Trucking and 31 20 00 Earth Moving.

END OF SECTION 01 35 40

SECTION 01 35 50 - TREE PRESERVATION

PART 1 - GENERAL

1.1 SUMMARY

A. The work of this section consists of tree preservation guidelines that will help reduce impacts to trees from development and maintain and improve their health and vitality through the clearing, grading, and construction phases.

1.2 PRECONSTRUCTION TREATMENTS

A. In areas of adjacent construction, fence all trees to be retained to completely enclose the TREE PROTECTION ZONE prior to demolition, grubbing or grading. Fencing shall be placed at the dripline. Fences are to remain until all grading and construction is completed. Where construction requires encroachment within the dripline the consulting arborist will identify a smaller Tree Protection Zone. In locations where encroachment within the dripline is required, trunk protection may also be required.

B. Where clearance for construction equipment requires pruning of trees:

1. All pruning shall be first approved by COR and shall be in accordance with the Best Management Practices for Pruning (International Society of Arboriculture, 2002) and adhere to the most recent editions of the American National Standard for Tree Care Operations (Z133.1) and Pruning (A300).
2. An I.S.A. Certified Arborist or Tree Worker is to be present at all times during pruning. Arborist must have a State of Calif. Contractors License for Tree Service (C61-D49) and provide proof of workman's compensation and general liability insurance.

1.3 REQUIREMENTS FOR TREE PROTECTION DURING CONSTRUCTION

A. No grading, construction, demolition or other work shall occur within the Tree Protection Zone. Any modifications must be approved and monitored by the Consulting Arborist.

B. Any root pruning required for construction purposes shall receive the prior approval of, and be supervised by, the Consulting Arborist.

C. If injury should occur to any tree during construction, it should be evaluated as soon as possible by the Consulting Arborist so that appropriate treatments can be applied.

D. Root-injured trees have a limited capacity to absorb water. Therefore, it is important to insure adequate soil moisture in the area of active roots. One to several irrigations may be needed for trees that are at risk. Irrigations should be specified by the Consulting Arborist.

E. No excess soil, chemicals, debris, equipment or other materials shall be dumped or stored within the Tree Protection Zone.

F. Any additional tree pruning needed for clearance during construction must be performed by a Certified Arborist and not by construction personnel.

PART 2 - PRODUCTS

2.1 TREE ENCLOSURE

A. FENCING: See Section 01 50 00 Temporary Facilities and Controls.

PART 3 - EXECUTION (NOT USED.)

END OF SECTION

GOGA-244458 / FOPO-186401

SECTION 01 40 00 - QUALITY REQUIREMENTS

PART 1 - GENERAL

1.1 SUMMARY

A. Section includes administrative and procedural requirements for quality assurance and quality control.

B. Testing and inspecting services are required to verify compliance with requirements specified or indicated. These services do not relieve Contractor of responsibility for compliance with Contract Document requirements. Quality of work shall be responsibility of the Contractor.

1. Specified tests, inspections, and related actions do not limit Contractor's other quality assurance and control procedures that facilitate compliance with Contract Document requirements.

C. See Divisions 2 through 49 Sections for specific test and inspection requirements.

1.2 DEFINITIONS

A. Quality Assurance Services: Activities, actions, and procedures performed before and during execution of the work to guard against defects and deficiencies and substantiate that proposed construction will comply with requirements.

B. Quality Control Services: Tests, inspections, procedures, and related actions during and after execution of the work to evaluate actual products incorporated into the work and completed construction comply with requirements.

C. Mockups: Full-size physical assemblies constructed on-site. Mockups are constructed from selections made under Sample submittals; to demonstrate aesthetic effects and, where indicated, qualities of materials and execution; to review coordination, testing, or operation; to show interface between dissimilar materials; and to demonstrate compliance with specified installation tolerances. Mockups are not Samples. Approved mockups establish the standard by which the Work will be judged, unless otherwise indicated.

D. Preconstruction Testing: Tests and inspections performed specifically for project before products and materials are incorporated into work to verify performance or compliance with specified criteria.

E. Product Testing: Tests and inspections performed by a Nationally Recognized Testing Laboratory (NRTL), a National Voluntary Laboratory Accreditation Program (NVLAP), or a testing agency

qualified to conduct product testing, to establish product performance and compliance with industry standards.

F. Source Quality Control Testing: Tests and inspections performed at the source, i.e., plant, mill, factory, or shop.

G. Field Quality Control Testing: Tests and inspections performed on-site for installation of work and for completed work.

H. Testing Agency or Laboratory: Entity engaged to perform specific tests, inspections, or both. Testing laboratory shall mean the same as testing agency.

I. Installer/Applicator/Erector: Contractor or another entity engaged by Contractor as an employee, Subcontractor, or Sub-subcontractor, to perform a particular construction operation, including installation, erection, application, and similar operations.

1. Using a term such as "carpentry" does not imply certain construction activities must be performed by accredited or unionized individuals of a corresponding generic name, such as "carpenter." It also does not imply that requirements specified apply exclusively to trades people of corresponding generic name.

1.3 CONFLICTING REQUIREMENTS

A. Reference Standards: If compliance with two or more standards is specified and standards establish different or conflicting requirements for minimum quality levels, comply with most stringent requirement. Refer uncertainties and requirements that are different, but apparently equal, to Contracting Officer before proceeding.

B. Minimum Quality Levels: Quality level shown or specified shall be minimum provided or performed. Actual installation may comply exactly with minimum quality specified, or it may exceed minimum within reasonable limits. To comply with requirements, indicated numeric values are minimum or maximum, as appropriate, for the context of requirements. Refer uncertainties to Contracting Officer before proceeding.

1.4 SUBMITTALS

A. Quality Control Plan:

1. After contract award and before Pre-Construction conference, submit a written Contractor Quality Control (CQC) plan.
2. If plan requires revisions or corrections, Contractor shall resubmit plan within 10 days.
3. Government reserves the right to require changes in plan during contract period as necessary to obtain the quality specified.
4. No change in the approved plan may be made without written concurrence by Contracting Officer.

B. Qualification Data: For testing agencies specified in "Quality Assurance" Article to demonstrate their capabilities and experience. Include proof of qualifications in form of a recent report on inspection of testing agency by a recognized authority.

C. Contractor Quality Control (CQC) Daily Reports: Submit showing inspections and tests on first workday following date covered by report. Quality Control Supervisor shall utilize DSC Forms.

1. Review Construction Management Representative (CMR) Daily report if applicable and reconcile any differences prior to posting.

D. Test Reports

1. Test reports shall be completed by person performing test.
2. Submit Daily Test Information Sheets with Quality Control Daily Reports.
3. Submit failing test results and proposed remedial actions within four hours of noted deficiency.
4. Submit three copies of complete test results no later than one calendar day after test was performed.

E. Accessibility Inspection Report:

1. Fill out applicable sections of the Accessibility Inspection Report and attach to Contractor Quality Control Daily Report.
2. Utilize attached Accessibility Inspection form to document compliance with Architectural Barriers Act Accessibility Standards (ABAAS).
3. Inspect at various stages of construction as needed to ensure finished product meets standards.
4. Submit report no later than one calendar day after inspection was performed.

F. Off-Site Inspection Reports: Submit prior to shipment.

G. If Contractor Quality Control plan and Quality Control Daily Reports are not submitted as specified, Contracting Officer may retain payments until such time plan(s) is/are accepted and implemented, or may retain payments for work completed on days with no Quality Control Daily Reports.

H. Permits, Licenses, and Certificates: For National Park Service (NPS) records, submit copies of permits, licenses, certifications, inspection reports, releases, jurisdictional settlements, notices, receipts for fee payments, judgments, correspondence, records, and similar documents, established for compliance with standards and regulations bearing on performance of work.

1.5 QUALITY ASSURANCE

A. General: Qualifications paragraphs in this Article establish minimum qualification levels required; individual Specification Sections specify additional requirements.

B. Contractors Quality Control Staff:

1. Contractor's Quality Control Supervisor may also perform other duties.
2. Contractor's job supervisory staff may be used to assist Quality Control Supervisor supplemented, as necessary, by additional certified testing technicians.

C. Installer Qualifications: Firm or individual experienced in installing, erecting, or assembling work similar in material, design, and extent indicated for Project, whose work has resulted in construction with a record of successful in-service performance.

D. Manufacturer Qualifications: Firm experienced in manufacturing products or systems similar to those indicated for Project and with a record of successful in-service performance, as well as sufficient production capacity to produce required units.

E. Fabricator Qualifications: Firm experienced in producing products similar to those indicated for Project and with a record of successful in-service performance, as well as sufficient production capacity to produce required units.

F. Professional Engineer Qualifications: Professional engineer legally qualified to practice in jurisdiction where Project is located and is experienced in providing engineering services of kind indicated (including Structural Tests and Special Inspections (STSI)). Engineering services are defined as those performed for installations of system, assembly, or products similar to those indicated for Project in material, design, and extent.

G. Specialists: Certain sections of the Specifications require that specific construction activities shall be performed by entities who are recognized experts in those operations. Specialists shall satisfy qualification requirements indicated and shall be engaged for activities indicated.

1. Requirement for specialists shall not supersede building codes and regulations governing Work.

H. Testing Agency Qualifications: A Nationally Recognized Testing Laboratory (NRTL), a National Voluntary Laboratory Accreditation Program (NVLAP), or an independent agency with experience and capability to conduct testing and inspecting indicated, according to ASTM E 329; and with additional qualifications specified in individual Sections; and where required by Contract, is acceptable to Contracting Officer.

1. Nationally Recognized Testing Laboratory (NRTL): Nationally recognized testing laboratory according to 29 CFR 1910.7 (Code of Federal Regulations).
2. National Voluntary Laboratory Accreditation Program (NVLAP): Testing agency accredited according to National Institute of Standards and Technology's (NIST) National Voluntary Laboratory Accreditation Program.
3. Measuring devices, laboratory equipment, and instruments shall be calibrated at established intervals against certified standards in accordance with NIST requirements. Measuring and testing devices shall be made available for use by Government for verification tests.

I. Factory-Authorized Service Representative Qualifications: Authorized representative of manufacturer who is trained and approved by manufacturer to inspect installation of manufacturer's products similar in material, design, and extent to those indicated for Project.

J. Mockups: Before installing portions of work requiring mockups, build mockups for each form of construction and finish required to comply with following requirements, using materials indicated for completed work:

1. Build mockups in location and of size indicated; if not indicated, as directed by Contracting Officer.
2. Notify Contracting Officer **seven** days in advance of dates and times when mockups will be constructed.
3. Demonstrate proposed range of aesthetic effects and workmanship.
4. Obtain Contracting Officer's approval of mockups before starting work, fabrication, or construction.

5. Maintain mockups in an undisturbed condition as a standard for judging the completed work.
6. Demolish and remove mockups when directed, unless otherwise indicated.

1.6 QUALITY CONTROL

A. Contractor is responsible for testing and inspections, including Structural Tests and Special Inspections (STSI), as identified in attached STSI for each PMIS. Inspect and test work as needed to ensure quality of materials, workmanship, construction, finish, and functional performance are in compliance with applicable specifications, drawings, and those required by the Building Code.

1. Engage qualified testing agency to perform quality-control services.
2. Submit appropriate report for each quality-control service.
3. Testing and inspecting requested by Contractor and not required by Contract Documents are Contractor's responsibility.
4. Contracting Officer may designate test locations.

B. Manufacturer's Field Services: Where indicated, engage factory-authorized service representative to inspect field-assembled components and equipment installation, including service connections. Report results in writing.

C. Re-testing/Re-inspecting: Regardless of whether original tests or inspections were Contractor's responsibility, provide quality-control services, including retesting and re-inspecting, for construction of replaced work that failed to comply with Contract Documents.

D. Testing Agency Responsibilities: Cooperate with NPS and Contractor in performance of duties. Provide qualified personnel to perform required tests and inspections.

1. Notify Contracting Officer and Contractor promptly of irregularities or deficiencies observed in work during performance of services.
2. Determine location from which test samples will be taken and in which in-situ tests are conducted.
3. Conduct and interpret tests and inspections, State in each report whether tested and inspected work complies with or deviates from requirements.
4. Submit 3 copies of certified written report of each test, inspection, and similar quality-control service through Contractor.
5. Do not release, revoke, alter, or increase Contract Document requirements or approve or accept any portion of Work.

E. Associated Services: Cooperate with agencies performing required tests, inspections, and similar quality-control services, and provide reasonable auxiliary services as requested. Notify agency sufficiently in advance of operations to permit assignment of personnel. Provide:

1. Access to Work.
2. Incidental labor and facilities necessary to facilitate tests and inspections.
3. Adequate quantities of representative samples of materials that require testing and inspecting. Assist agency in obtaining samples.
4. Facilities for storage and field curing of test samples.
5. Delivery of samples to testing agencies.
6. Preliminary design mix proposed for material mixes that require control by testing agency.
7. Security and protection for samples and testing and inspecting equipment at Project site.

F. Coordination: Coordinate sequence of activities to accommodate required quality assurance and control services with minimum delay and to avoid removing and replacing construction to accommodate testing and inspecting.

1. Schedule times for tests, inspections, obtaining samples, and similar activities.

PART 2 - PRODUCTS

2.1 QUALITY CONTROL PLAN

A. Quality Control Plan shall include:

1. List of personnel responsible for quality control and assigned duties. Include each person's qualifications. Include alternate(s) and qualifications.
2. Copy of letter of direction to Contractor's Quality Control Supervisor(s) outlining assigned duties and authorities designated by principal or owner.
3. Names, qualifications / accreditations, and descriptions of laboratories to perform sampling and testing, and samples of proposed report forms from laboratories.
4. Methods of performing, documenting, and enforcing quality control of work including Contractor report forms and acknowledgment of NPS forms.
5. Methods of monitoring and controlling environmental pollution and contamination as required by regulations and laws.
6. Specific discussion regarding mockups, off-site visits, receiving inspections, manufacturers representation, startup requirements, and other aspects of performance specific to Project.
7. Provisions for substantial completion(s) and final inspection(s) per Contract.

PART 3 - EXECUTION

3.1 OFF-SITE CONTROL

A. Items fabricated or assembled off-site shall be inspected for quality control at place of fabrication.

3.2 ON-SITE CONTROL

A. Notification:

1. Notify Contracting Officer at least 48 hours in advance of preparatory phase meeting.
2. Notify Contracting Officer at least 24 hours in advance of initial and follow-up phases.

B. Preparatory Phase: Perform before beginning each feature of work.

1. Review control submittal requirements with personnel directly responsible for quality assurance and quantity control of the work. As a minimum, Contractor's Quality Control Supervisor and foreman responsible for feature of work shall be in attendance.
2. Review applicable specifications sections and drawings related to feature of work.

3. Ensure copies of referenced standards related to sampling, testing, and execution for feature of work are available on site.
4. Ensure provisions have been made for field control testing.
5. Examine work area to ensure preliminary work has been completed.
6. Verify field dimensions and advise Contracting Officer of discrepancies with contract documents.
7. Ensure necessary equipment and materials are at project site and they comply with approved shop drawings and submittals.
8. Document preparatory phase activities and discussions on Contractor's Quality Control Daily Report.

C. Initial Phase:

1. As soon as work begins, inspect and test representative portion of particular feature of work for quality of workmanship.
2. Review control testing procedures to ensure compliance with contract requirements.
3. Document initial phase activities and discussions on Contractor's Quality Control Daily Report. Exact location of initial phase shall be indicated for future reference and comparison with follow-up phases.

D. Follow-Up Phase: Inspect and test as work progresses to ensure compliance with contract requirements until completion of work.

E. Additional Preparatory and Initial Phases: Additional preparatory and initial phases may be required on same feature of work for following reasons:

1. Quality of on-going work is unacceptable.
2. Changes in quality control staff, on-site production supervision, or work crew.
3. Work on particular feature of work is resumed after substantial period of inactivity.

3.3 DOCUMENTATION

A. Maintain Quality Control Daily Reports, Daily Test Report Information Sheets, and Accessibility Inspection Reports of quality control activities and tests. (Download from DSC Workflows website > Forms/Templates/Samples/Guidelines page > Construction Forms section.)

B. Quality Control Daily Reports shall not be substituted for other written reports required under clauses of contract, such as Disputes, Differing Site Conditions, or Changes.

C. Quality Control Daily Reports shall accurately portray all work and materials. The materials shall match the materials as approved from the Construction Documents (CD) requirements. Combustible/flammable materials shall be documented as well.

3.4 ENFORCEMENT

A. Contractor shall stop work on any item or feature pending satisfactory correction of deficiency noted by quality control staff or Contracting Officer.

3.5 REPAIR AND PROTECTION

A. General: On completion of testing, inspecting, sample taking, and similar services, repair damaged construction and restore substrates and finishes.

1. Provide materials and comply with installation requirements specified in other Specification Sections. Restore patched areas and extend restoration into adjoining areas with durable seams as invisible as possible.

B. Protect construction exposed by or for quality-control service activities.

C. Repair and protection are Contractor's responsibility, regardless of the assignment of responsibility for quality-control services.

END OF SECTION 01 40 00

Statement of Structural Tests and Special Inspections

National Park Service (NPS) - Denver Service Center (DSC) | 8-22-24

Park: Golden Gate National Recreation Area (GOGA)

Project Management Information System (PMIS) Number: **GOGA 244458**

Project Name: GOGA, Presidio of San Francisco – West Bluff Picnic Area

Structural Engineering Firm: Otak, Inc.

This Statement of Structural Tests and Special Inspections is being submitted as required by Chapter 17 of the **2024 International Building Code** (IBC 2024). It includes the following:

1. Seismic requirements
2. Wind requirements
3. Qualification Requirements for Inspectors and Testing Technicians
4. Listing of Required Structural Tests and Special Inspections

The Construction Contractor's Quality Control Supervisor will provide copies of all special inspection reports and associated documentation to the Contracting Officer (CO). The Construction Contractor will be required to correct all deficiencies discovered in the Special Inspection and Structural Testing program.

Prepared By: Sean Clark
(Type or print name)

Signature: Sean Clark Date: 12/19/24

Stamped by Professional Engineer (PE) or Structural Engineer (SE)

Seismic and Wind Requirements

Seismic Requirements, IBC 2024 Section 1704.3

Description of seismic-force-resisting system and designated seismic systems subject to special inspections:

CIP Concrete Retaining Walls:
Cast-in-place concrete retaining walls are designed to resist seismic earth pressures. Pressures are according to the Geotechnical report.

Wind Requirements, IBC 2024 Section 1704.3

Description of wind-force-resisting system and designated wind systems subject to special inspections:

CIP Concrete Retaining Walls:
Seismic design controls over wind design for the retaining walls.

Instructions:

1. Under Listing of Required Structural Tests and Special Inspections:
    a. **Required?** - Place an **X** for all Special Inspections and Tests required for this project.
    b. **Required Qualifications** - Provide qualifications for the special inspector, using the Qualification Requirements for Inspector and Testing Technicians list below, for all required Structural Tests and Special Inspections.
    c. **Continuous** - If marked with an **X**, continuous special inspection shall be as defined in Chapter 2, IBC 2024.
    d. **Periodic** - If marked with an **X**, provide the minimum number of tests, i.e. 20% of all field welds, or the amount of work to be inspected (e.g. 10% of all wall surfaces).
2. Attach completed Statement of Structural Tests and Special Inspections to the end of NPS DSC Division 1 Specifications **Section 01 40 00 Quality Requirements**.

Qualification Requirements for Inspectors and Testing Technicians

PE/SE	Structural Engineer – licensed PE or SE specializing in the design of buildings and structures
PE/GE	Geotechnical Engineer – licensed PE specializing in soil mechanics and foundations
EIT	Engineer-In-Training – graduate engineer who has passed the Fundamentals of engineering examination

American Concrete Institute (ACI) Certification

ACI-CCSI	Concrete Construction Special Inspector
ACI-LTT	Concrete Laboratory Testing Technician Level 1 or 2
ACI-STT	Concrete Strength Testing Technician
ACI-FTT	Concrete Field Testing Technician – Grade I

American Society of Non-Destructive Testing (ASNT) Certification

Non-Destructive Testing Technician – Level II or III

American Welding Society (AWS) Certification

AWS-CWI	Certified Welding Inspector

Exterior Design Institute (EDI) Certification

EDI-EIFS	Certified EIFS inspector

International Code Council (ICC) Certification

ICC-PCSI	Prestressed Concrete Special Inspector
ICC-RCSI	Reinforced Concrete Special Inspector
ICC-SSI	Soils Special Inspector
ICC-SFSI	Spray-applied Fireproofing Special Inspector
ICC-SMSI	Structural Masonry Special Inspector
ICC-SSBSI	Structural Steel and Bolting Special Inspector
ICC-SWSI	Structural Welding Special Inspector

National Institute for Certification in Engineering Technologies (NICET) Certification

NICET-CT	Concrete Technician – Levels I, II, III and IV
NICET-GET	Geotechnical Engineering Technician - Levels I, II, III and IV
NICET-ST	Soils Technician - Levels I, II, III and IV

Other

I	Inspector Approved by CO

Listing of Required Structural Tests and Special Inspections

Required?	Structural Test or Special Inspection	Required Qualifications	Continuous	Periodic	Frequency of Periodic Test or Inspection
	Structural Steel (IBC 2024 Section 1705.2; American Institute of Steel Construction: AISC 360-22 Chapter N, AISC 341-22 Chapter J)				
	Prior to Welding (AISC 360-22 Table C-N5.4-1)				
	1. Welder qualification records and continuity records.		X		
	2. Welding procedure specifications (WPS) available.		X		
	3. Manufacturer certifications for welding consumables available.		X		
	4. Material identification (type/grade).			X	
	5. Welder identification system.			X	
	6. Fit-up of groove welds (including joint geometry).				
	a. Joint preparation.			X	
	b. Dimensions (alignment, root opening, root face, bevel).			X	
	c. Cleanliness (condition of steel surfaces).			X	
	d. Tacking (tack weld quality and location).			X	
	e. Backing type and fit (if applicable).			X	
	7. Fit-up of CJP (complete joint penetration) groove welds of HSS (hollow structural sections) T-, Y- and K-joints without backing (including joint geometry).				
	a. Joint preparation.				
	b. Dimensions (alignment, root opening, root face, bevel).				
	c. Cleanliness (condition of steel surfaces).				
	d. Tacking (tack weld quality and location).				

Required?	Structural Test or Special Inspection	Required Qualifications	Continuous	Periodic	Frequency of Periodic Test or Inspection
	8. Configuration and finish of access holes.			X	
	9. Fit-up of fillet welds.				
	a. Dimensions (alignment, gaps at root).			X	
	b. Cleanliness (condition of steel surfaces).			X	
	c. Tacking (tack weld quality and location).			X	
	10. Check welding equipment.			X	
	During Welding (AISC 360-22 Table C-N5.4-2)				
	1. Control and handling of welding consumables				
	a. Packaging.			X	
	b. Exposure control.			X	
	2. No welding over cracked tack welds.			X	
	3. Environmental conditions.				
	a. Wind speed within limits.			X	
	b. Precipitation and temperature.			X	
	4. WPS followed.				
	a. Settings on welding equipment.			X	
	b. Travel speed.			X	
	c. Selected welding materials.			X	
	d. Shielding gas type/flow rate.			X	
	e. Preheat applied.			X	
	f. Interpass temperature maintained (minimum/maximum).			X	
	g. Proper position (F, V, H, OH).			X	

Required?	Structural Test or Special Inspection	Required Qualifications	Continuous	Periodic	Frequency of Periodic Test or Inspection
	h. Intermix of filler metals avoided unless approved (AISC 341-22 Section J7).			X	
	5. Use of qualified welders.		X		
	6. Welding techniques.				
	a. Interpass and final cleaning.			X	
	b. Each pass within profile limitations.			X	
	c. Each pass meets quality requirements.			X	
	7. Placement and installation of headed stud anchors.		X		
	After Welding (AISC 360-22 Table C-N5.4-3)				
	1. Welds cleaned.			X	
	2. Size, length and location of welds.		X		
	3. Welds meet visual acceptance criteria.				
	a. Crack prohibition.		X		
	b. Weld/base-metal fusion.		X		
	c. Crater cross section.		X		
	d. Weld profiles.		X		
	e. Weld size.		X		
	f. Undercut.		X		
	g. Porosity.		X		
	4. Arc strikes.		X		
	5. k-area.		X		
	6. Weld access holes in rolled heavy shapes and built-up heavy shapes.		X		
	7. Backing removed and weld tabs removed (if required).		X		

Required?	Structural Test or Special Inspection	Required Qualifications	Continuous	Periodic	Frequency of Periodic Test or Inspection
	8. Repair activities.		X		
	9. Document acceptance or rejection of welded joint or member.		X		
	10. No prohibited welds have been added without the approval of the EOR (Engineer of Record).		X		
	11. Placement of reinforcing or contouring fillet welds (if required) (AISC 341-22 Table J7.1).		X		
	Nondestructive Testing (AISC 360-22 Section N5 and AISC 341-22 Section J7)				
	1. Risk Category II Structures - Perform Ultrasonic Testing on 10% of CJP groove welds in butt, T- and corner joints subject to transversely applied tension loading, in materials 5/16 inch thick or greater.			X	
	2. Risk Category III or IV Structures - Perform Ultrasonic Testing on all CJP groove welds subject to transversely applied tension loading in butt, T- and corner joints, in materials 5/16 inch thick or greater.		X		
	3. Access Holes - Perform Magnetic Particle Testing or Liquid Penetrant Testing when the flange thickness exceeds 1.5 inches for rolled shapes, or when the web thickness exceeds 1.5 inches for built-up shapes.		X		
	4. Welded Joints Subject to Fatigue - Perform testing per AISC 360-22 Section N5c.		X		
	Nondestructive Testing (AISC 341-22 Section J7)				
	Column Splice and Column to Base Plate PJP Groove Weld (AISC 341-22 Section J7 2b)				
	1. Perform Ultrasonic Testing on 100% of PJP (partial-joint-penetration) groove welds in column splices and column to base plate welds.		X		
	2. CJP Groove weld.		X		
	3. Lamellar tearing.		X		
	4. Beam cope and access hole.		X		

Required?	Structural Test or Special Inspection	Required Qualifications	Continuous	Periodic	Frequency of Periodic Test or Inspection
	5. Reduced beam section repair.		X		
	6. Weld tab removal.		X		
	Prior to Bolting (AISC 360-22 Table C-N5.6-1)				
	These inspections are not required for snug-tight joints.				
	1. Manufacturer's certifications available for fastener materials.		X		
	2. Fasteners marked in accordance with ASTM requirements.			X	
	3. Correct fasteners selected for the joint detail (grade, type, bolt length if threads are to be excluded from shear plane).			X	
	4. Correct bolting procedure selected for joint detail.			X	
	5. Connecting elements, including the appropriate faying surface condition and hole preparation, if specified, meet applicable requirements.			X	
	6. Pre-installation verification testing by installation personnel observed and documented for fastener assemblies and methods used.			X	
	7. Protected storage provided for bolts, nuts, washers and other fastener components.			X	
	During Bolting (AISC 360-22 Table C-N5.6-2)				
	These inspections are not required for snug-tight joints.				
	These inspections are not required for pretensioned joints and slip-critical joints, when the installer is using the turn-of-nut method with matchmarking techniques, the direct-tension-indicator method, or the twist-off-type tension control bolt method.				
	1. Fastener assemblies, of suitable condition, placed in all holes and washers (if required) are positioned as required.			X	
	2. Joint brought to the snug-tight condition prior to the pretensioning operation.			X	

Required?	Structural Test or Special Inspection	Required Qualifications	Continuous	Periodic	Frequency of Periodic Test or Inspection
	3. Fastener component not turned by the wrench prevented from rotating.			X	
	4. Fasteners are pretensioned in accordance with the RCSC (Resource Council on Structural Connections) Specification, progressing systematically from the most rigid point toward the free edges.			X	
	After Bolting (AISC 360-22 Table C-N5.6-3)				
	Document acceptance or rejection of bolted connections.		X		
	Galvanized Structural Steel Main Members (AISC 360-22 Table C-N5.6-3)				
	Inspect per AISC 360-22 Section N5.7.			X	
	Other Inspection Tasks (AISC 360-22 Section N5.8 and AISC 341-22 Section J9)				
	1. Verify compliance of fabricated steel with the details shown on the approved shop drawings.			X	
	2. Verify compliance of the erected steel frame with the details shown on the approved erection drawings, including braces, stiffeners, member locations and joint details.			X	
	3. Anchor rods and other embedments support structural steel.				
	a. Verify the diameter, grade, type and length of the anchor rod or embedded item.			X	
	b. Verify the extent or depth of embedment into the concrete.			X	
	4. RBS (reduce beam section) requirements, if applicable. (AISC 341-22)				
	a. Contour and finish.			X	
	b. Dimensional tolerances.			X	
	5. Protected zone - no holes or unapproved attachments made by fabricator or erector, as applicable. (AISC 341-22)			X	
	Inspection of H-Piles (AISC 341-22 Section J11)				

Required?	Structural Test or Special Inspection	Required Qualifications	Continuous	Periodic	Frequency of Periodic Test or Inspection
	1. Protected zone - no holes or unapproved attachments made by the responsible contractor, as applicable. (AISC 341-22 Table J11.1)			X	
	Structural Stainless Steel (IBC 2024 1705.2.2)				
	1. Special inspections and nondestructive testing in accordance with AISC 370-21.			X	
	Cold-formed Steel Deck (IBC 2024 1705.2.3)				
	2. Special inspections in accordance with QA/QC-2022 Standard for Quality control (QC) and Quality assurance (QA) for Installation of Steel Deck.			X	
	Open-Web Steel Joists and Joist Girders (IBC 2024 Table 1705.2.4)				
	1. Installation of open-web steel joists and joist girders.				
	a. End connections - welding or bolted.			X	
	b. Bridging - horizontal or diagonal.				
	1. Standard bridging.			X	
	2. Bridging that differs from the SJI (Steel Joist Institute) specifications listed in Section 2207.1.			X	
	Inspection of Composite Structures Prior to Concrete Placement (AISC 341Table J10.1)				
	1. Material identification of reinforcing steel (Type/Grade).			X	
	2. Determination of carbon equivalent for reinforcing steel other than ASTM A706.			X	
	3. Proper reinforcing steel size, spacing and orientation.			X	
	4. Reinforcing steel has not been rebent in the field.			X	
	5. Reinforcing steel has been tied and supported as required.			X	

Required?	Structural Test or Special Inspection	Required Qualifications	Continuous	Periodic	Frequency of Periodic Test or Inspection
	6. Required reinforcing steel clearances have been provided.			X	
	7. Composite member has required size.			X	
	Inspection of Composite Structures During Concrete Placement (AISC 341-22 Table J10.2)				
	1. Concrete: Material identification (mix design, compressive strength, maximum large aggregate size, maximum slump).			X	
	2. Limits on water added at the truck or pump.			X	
	3. Proper placement techniques to limit segregation.			X	
	Inspection of Composite Structures After Concrete Placement (AISC 341-22 Table J10)				
	1. Achievement of minimum specified concrete compressive.			X	
	Cold-formed Steel Trusses Spanning 60-feet or Greater (IBC 2024 Section 1705.2.45)				
	1. Verify temporary installation restraint/bracing installed in accordance with the approved shop drawings.			X	
	2. Verify permanent individual truss member restraint/bracing installed in accordance with the approved shop drawings.			X	
	Metal Building Systems (IBC 2024 Section 1705.2.6 - Inspect per Structural Steel requirements above as applicable plus requirements in IBC 2024 Table 1705.2.6)				
	1. Installation of rafter/beam flange braces and column flange braces.			X	
	2. Installation of purlins and girts, including specified lapping.			X	
	3. Purlin and girt restraint/bridging/bracing.			X	
	4. Installation of X-bracing, tightened to remove any sag.			X	
	Concrete Construction (IBC 2024 Section 1705.3)				

Required?	Structural Test or Special Inspection	Required Qualifications	Continuous	Periodic	Frequency of Periodic Test or Inspection
X	1. Inspect reinforcing steel, including prestressing tendons, and verify placement.	**ICC-RCSI**		X	**50% of rebar**
	2. Inspection of reinforcing steel welding				
	a. Verify weldability of reinforcing bars other than ASTM A706.			X	
	b. Inspect welding of reinforcement for special moment frames, boundary elements of special structural walls and coupling beams.		X		
	c. Inspect welded reinforcement splices.		X		
	d. Inspect welding of primary tension reinforcement in corbels.		X		
	e. Inspect single pass fillet welds, maximum 5/16 inch.			X	
	f. Inspect all other weds.			X	
	3. Inspection of anchors cast in concrete.			X	
	4. Inspection of anchors post-installed in hardened concrete members.				
	a. Adhesive anchors installed in horizontally or upwardly inclined orientations to resist sustained tension load.		X		
	b. Mechanical anchors and adhesive anchors not defined in 4a.			X	
X	5. Verify use of approved design mix.	**ICC-RCSI**		X	**50% of pours**
X	6. Prior to placement fabricate specimens for strength tests, perform slump and air content tests, and determine the temperature of the concrete.	**ICC-RCSI**	X		
X	7. Inspect concrete and shotcrete placement for proper application techniques.	**ICC-RCSI**	X		
X	8. Inspect for maintenance of specified curing temperature and techniques.	**ICC-RCSI**		X	**Daily**
	9. Inspection of prestressed concrete:				
	a. Application of prestressing forces.		X		

Required?	Structural Test or Special Inspection	Required Qualifications	Continuous	Periodic	Frequency of Periodic Test or Inspection
	b. Grouting of bonded prestressing tendons in the seismic-force-resisting system.		X		
	10. Erection of precast structural members.			X	
	11. For precast concrete diaphragm connections or reinforcement at joints classified as moderate or high deformability elements (MDE or HDE) in structures assigned to Seismic Design Category C, D, E, or F, inspect such connections and reinforcement in the field for:				
	a. Installation of the embedded parts.		X		
	b. Completion of the continuity of reinforcement across joints.		X		
	c. Completion of connections in the field.		X		
	12. Inspect installation tolerances of precast concrete diaphragm connections for compliance with ACI 550.5 (American Concrete Institute).			X	
	13. Verification of in-situ concrete strength, prior to stressing of tendons in post-tensioned concrete and prior to removal of shores and forms from beams and structural slabs.			X	
	14. Inspection formwork for shape, location and dimensions of the concrete member being formed.			X	
	Masonry Construction (IBC 2024 Section 1705.4)				
	1. Inspect masonry construction in accordance with IBC 2024 Section 1705.4 and TMS 402-22 and TMS 602-22 (The Masonry Society).				
	Level 1 Quality Assurance				
	Verification Requirements:				
	1. Prior to construction, verification of compliance of submittals.			X	
	Level 2 Quality Assurance				
	Verification Requirements:				

Required?	Structural Test or Special Inspection	Required Qualifications	Continuous	Periodic	Frequency of Periodic Test or Inspection
	1. Prior to construction, verification of comliance submittals.			X	
	2. Prior to construction, verification of f'_m and f'_{AAC} except where specifically exempted by the code.			X	
	3. During construction, verification of slump flow and Visual Stability Index (VSI) when self-consolidating grout is delivered to the project site in accordance with TMS 602-22 Specification Article 1.5 & 1.6.3.			X	
	Inspection Tasks:				
	1. As masonry construction begins, verify the following are in compliance:				
	a. Proportions of site-prepared mortar.			X	
	b. Grade and size of prestressing tendons and anchorages.			X	
	c. Grade, type and size or reinforcement, connectors, anchor bolts, and prestressing tendons and anchorages.				
	d. Prestressing technique.			X	
	e. Properties of thin-bed mortar for AAC (autoclaved aerated concrete) masonry.		X	X	Continuous inspection is required for the first 5000 square feet of AAC masonry. Periodic inspection is required after the first 5000 square feet of AAC masonry.
	f. Sample panel construction.			X	
	2. Prior to grouting, verify the following are in compliance:				
	a. Grout space.			X	

Required?	Structural Test or Special Inspection	Required Qualifications	Continuous	Periodic	Frequency of Periodic Test or Inspection
	b. Placement of prestressing tendons and anchorages.			X	
	c. Placement of reinforcement, connectors, and anchor bolts.			X	
	d. Proportions of site-prepared grout and prestressing grout for bonded tendons.			X	
	3. Verify the compliance of the following during construction:				
	a. Materials and procedures with the approved submittals.			X	
	b. Placement of masonry units and mortar joint construction.			X	
	c. Size and location of structural members.			X	
	d. Type, size and location of anchors, including other details of anchorage of masonry to structural members, frames, or other construction.			X	
	e. Welding of reinforcement.		X		
	f. Preparation, construction and protection of masonry during cold weather (temperature below 40 degrees Fahrenheit) or hot weather (temperature above 90 degrees Fahrenheit).			X	
	g. Application and measurement of prestressing force.		X		
	h. Placement of grout and prestressing grout for bonded tendons is in compliance.		X		
	i. Placement of AAC masonry units and construction of thin-bed mortar joints.		X	X	Continuous inspection is required for the first 5000 square feet of AAC masonry. Periodic inspection is required after the first 5000 square feet of AAC masonry.

Required?	Structural Test or Special Inspection	Required Qualifications	Continuous	Periodic	Frequency of Periodic Test or Inspection
	4. Observe preparation of grout specimens, mortar specimens and/or prisms.			X	
	Level 3 Quality Assurance				
	Verification Requirements:				
	1. Prior to construction, verification of compliance of submittals.			X	
	2. Prior to construction, verification of f'_m and f'_{AAC} except where specifically exempted by the Code.			X	
	3. During construction, verification of Slump flow and Visual Stability Index (VSI) when self-consolidating grout is delivered to the project site in accordance with TMS 602-22 Specification Article 1.5 & 1.6.3.			X	
	4. During construction, verification of f'_m and f'_{AAC} for every 5000 square feet.			X	
	5. During construction, verification of proportions of materials as delivered to the project site for premixed or preblended mortar, prestressing grout, and grout other than self-consolidating grout.			X	
	Inspection Tasks:				
	1. As masonry construction begins, verify the following are in compliance:				
	a. Proportions of site-prepared mortar.			X	
	b. Grade and size of reinforcement, connectors, anchor bolts, and prestressing tendons and anchorages.			X	
	c. Grade, type and size or reinforcement, connectors, anchor bolts, and prestressing tendons and anchorages.			X	
	d. Prestressing technique.			X	
	e. Properties of thin-bed mortar for AAC (autoclaved aerated concrete) masonry.		X		
	f. Sample panel construction.		X		

Required?	Structural Test or Special Inspection	Required Qualifications	Continuous	Periodic	Frequency of Periodic Test or Inspection
	2. Prior to grouting, verify the following are in compliance:				
	a. Grout space		X		
	b. Placement of prestressing tendons and anchorages.			X	
	c. Placement of reinforcement, connectors, and anchor bolts.		X		
	d. Proportions of site-prepared grout and prestressing grout for bonded tendons.			X	
	3. Verify compliance of the following during construction:				
	a. Materials and procedures with the approved submittals.			X	
	b. Placement of masonry units and mortar joint construction.			X	
	c. Size and location of structural members.			X	
	d. Type, size and location of anchors, including other details of anchorage of masonry to structural members, frames, or other construction.		X		
	e. Welding of reinforcement.		X		
	f. Preparation, construction and protection of masonry during cold weather (temperature below 40 degrees Fahrenheit) or hot weather (temperature above 90 degrees Fahrenheit).			X	
	g. Application and measurement of prestressing force.		X		
	h. Placement of grout and prestressing grout for bonded tendons is in compliance.		X		
	i. Placement of AAC masonry units and construction of thin-bed mortar joints.		X		
	4. Observe preparation of grout specimens, mortar specimens and/or prisms.		X		
	Wood Construction (IBC 2024 Section 1705.5)				

Required?	Structural Test or Special Inspection	Required Qualifications	Continuous	Periodic	Frequency of Periodic Test or Inspection
	1. Inspect prefabricated wood structural elements in accordance with Section 1704.2.5.			X	
	2. High load diaphragms:				
	a. Verify sheathing grade and thickness.			X	
	b. Verify nominal size of framing members at adjoining panel edges.			X	
	c. Verify nail or staple diameter and length.			X	
	d. Verify number of fastener lines.			X	
	e. Verify spacing between fasteners in each line and at panel edges.			X	
	3. Shearwalls:				
	a. Verify sheathing grade and thickness.			X	
	b. Verify nominal size of framing members at adjoining panel edges.			X	
	c. Verify nail or staple diameter and length.			X	
	d. Verify number of fastener lines.			X	
	e. Verify spacing between fasteners in each line and at panel edges.			X	
	f. Location and size of holdowns.			X	
	4. Verify nailing, bolting, anchoring and fastening of:				
	a. Drag struts and collectors.			X	
	b. Braces.			X	
	c. Hold-downs.			X	
	5. Metal-plate-connected wood trusses spanning 60 feet or greater:				
	a. Verify temporary installation restraint/bracing installed in accordance with the approved shop drawings.			X	

Required?	Structural Test or Special Inspection	Required Qualifications	Continuous	Periodic	Frequency of Periodic Test or Inspection
	b. Verify permanent individual truss member restraint/bracing installed in accordance with the approved shop drawings.			X	
	Mass Timber Construction (IBC 2024 Section 1705.5.3) Mass timber elements in Types IV-A, IV-B and IV-C:				
	1. Inspection of anchorage and connections of mass timber construction to timber deep foundation systems.			X	
	2. Inspect erection of mass timber construction.			X	
	3. Inspection of connections where installation methods are required to meet design loads.			X	
	4. Threaded fasteners:				
	a. Verify use of proper installation equipment.			X	
	b. Verify use of pre-drilled holes where required.			X	
	c. Inspect screws, including diameter, length, head type, spacing, installation angle and depth.			X	
	5. Adhesive anchors installed in horizontal or upwardly inclined orientation to resist sustained tension loads.		X		
	6. Adhesive anchors not defined in preceding cell.			X	
	7. Bolted connections.			X	
	8. Concealed connections.			X	
	Soils (IBC 2024 Section 1705.6)				
X	1. Verify materials below shallow foundations are adequate to achieve the required bearing capacity.	**ICC-SSI or PE/GE**		X	**50% of excavations**
X	2. Verify excavations are extended to proper depth and have reached proper material.	**ICC-SSI or PE/GE**		X	**50% of excavations**

Required?	Structural Test or Special Inspection	Required Qualifications	Continuous	Periodic	Frequency of Periodic Test or Inspection
X	3. Perform classification and testing of compacted fill materials.	**ICC-SSI or PE/GE**		X	**50% of excavations**
X	4. During fill placement, verify use of proper materials and procedure in accordance with the provisions of the approved geotechnical report. Verify densities and lift thicknesses during placement and compaction of compacted fill.	**ICC-SSI or PE/GE**	X		
X	5. Prior to placement of compacted fill, inspect subgrade and verify that site has been prepared properly.	**ICC-SSI or PE/GE**		X	**50% of excavations**
	Driven Deep Foundation Elements (IBC 2024 Section 1705.7)				
	1. Verify element materials, sizes and lengths comply with the requirements.		X		
	2. Determine capacities of test elements and conduct additional load tests when required. Refer to project specifications.		X		
	3. Inspect driving operations and maintain complete and accurate records for each element.		X		
	4. Verify element locations and plumbness.		X		
	a. Verify type and size of hammer.		X		
	b. Record number of blows per foot of penetration.		X		
	c. Determine required penetration to achieve specified capacity.		X		
	d. Record pile tip and butt elevations.		X		
	e. Document any damage to any foundation element.		X		
	5. For steel piling, perform additional inspection in accordance with Section 1705.2 and AISC 341-16, Table J10.1.				
	6. For concrete elements and concrete-filled elements, perform additional inspections in accordance with Section 1705.3.				

Required?	Structural Test or Special Inspection	Required Qualifications	Continuous	Periodic	Frequency of Periodic Test or Inspection
	7. For specialty elements, perform additional inspections as determined by the registered design professional in responsible charge as required in the project specifications.				
	Cast-in-Place Deep Foundation (IBC 2024 Section 1705.8)				
	1. Inspect drilling operations and maintain complete and accurate records for each element.		X		
	2. Verify element locations and plumbness.		X		
	a. Verify element diameter.		X		
	b. Verify bell diameter (if applicable).		X		
	c. Verify element lengths.		X		
	d. Verify embedment depth into bedrock (if applicable).		X		
	e. Verify adequate end-bearing strata capacity.		X		
	f. Record concrete or grout volumes.		X		
	3. For concrete elements, perform tests and additional inspections in accordance with Section 1705.3.				
	Helical Piles (IBC 2024 Section 1705.10)				
	1. Verify pile locations.		X		
	a. Verify installation equipment used.		X		
	b. Verify pile dimensions.		X		
	c. Verify tip elevations.		X		
	d. Verify final depth.		X		
	e. Verify final installation torque.		X		
	f. Other data as required by the project specifications.		X		

Required?	Structural Test or Special Inspection	Required Qualifications	Continuous	Periodic	Frequency of Periodic Test or Inspection
	Fabricated Items (IBC 2024 Section 1705.11)				
	1. Inspect fabricated items in accordance with Section 1704.2.5.		X		
	Wind Resistance (IBC 2024 Section 1705.12)				
	1. Provide inspections when required by Section 1705.12.				
	Seismic Resistance (IBC 2024 Section 1705.13)				
	1. Provide inspections when required by Section 1705.13.				
	Testing and Qualification for Seismic Resistance (IBC 2024 Section 1705.14)				
	1. Test and qualify seismic resistance in accordance with IBC 2024 Section 1705.14 and the project specifications.				
	Sprayed Fire-Resistive Materials (IBC 2024 Section 1705.15)				
	1. Inspect sprayed fire-resistant materials in accordance with IBC 2024 Section 1705.15 and the project specifications.				
	Intumescent Fire-Resistive Materials (IBC 2024 Section 1705.16)				
	1. Perform inspections in accordance with AWCI 12-B (Association of the Wall and Ceiling Industry) and IBC 2024 Section 1705.16.			X	
	Exterior Insulation and Finish Systems (EIFS) (IBC 2024 Section 1705.17)				
	1. Perform inspections in accordance with project specifications and IBC 2024 Section 1705.17.			X	

Required?	Structural Test or Special Inspection	Required Qualifications	Continuous	Periodic	Frequency of Periodic Test or Inspection
	Fire-Resistant Penetrations and Joints (IBC 2024 Section 1705.18)				
	1. Perform inspections in accordance with project specifications and IBC 2024 Section 1705.18.			X	
	Smoke Control (IBC 2024 Section 1705.19)				
	1. Perform testing in accordance with project specifications and IBC 2024 Section 1705.19.				
	Sealing of Mass Timber (IBC 2024 Section 1705.20)				
	1. Perform testing in accordance with project specifications and IBC 2024 Section 1705.20.				

Statement of Structural Tests and Special Inspections

National Park Service (NPS) - Denver Service Center (DSC) | 6-29-21

Park: Fort Point

Project Management Information System (PMIS) Number: **FOPO 186401**

Project Name: Widen and Reconstruct Long Avenue for Safer Multi-Modal Access

Structural Engineering Firm: AECOM

This Statement of Structural Tests and Special Inspections is being submitted as required by Chapter 17 of the **2021 International Building Code** (IBC-21). It includes the following:

1. Seismic requirements
2. Wind requirements
3. Qualification Requirements for Inspectors and Testing Technicians
4. Listing of Required Structural Tests and Special Inspections

The Construction Contractor's Quality Control Supervisor will provide copies of all special inspection reports and associated documentation to the Contracting Officer (CO). The Construction Contractor will be required to correct all deficiencies discovered in the Special Inspection and Structural Testing program.

Prepared By: _____

(Type or print name)

Signature: _____ Date: _____

Stamped by Professional Engineer (PE) or Structural Engineer (SE)

Seismic and Wind Requirements

Seismic Requirements, IBC-21 Section 1704.3

Description of seismic-force-resisting system and designated seismic systems subject to special inspections:

Wind Requirements, IBC-21 Section 1704.3

Description of wind-force-resisting system and designated wind systems subject to special inspections:

Instructions:

1. Under Listing of Required Structural Tests and Special Inspections:
    a. **Required?** - Place an **X** for all Special Inspections and Tests required for this project.
    b. **Required Qualifications** - Provide qualifications for the special inspector, using the Qualification Requirements for Inspector and Testing Technicians list below, for all required Structural Tests and Special Inspections.
    c. **Continuous** - If marked with an **X**, continuous special inspection shall be as defined in Chapter 2, IBC-21.
    d. **Periodic** - If marked with an **X**, provide the minimum number of tests, i.e. 20% of all field welds, or the amount of work to be inspected (e.g. 10% of all wall surfaces).
2. Attach completed Statement of Structural Tests and Special Inspections to the end of NPS DSC Division 1 Specifications **Section 01 40 00 Quality Requirements**.

Qualification Requirements for Inspectors and Testing Technicians

PE/SE	Structural Engineer – licensed PE or SE specializing in the design of buildings and structures
PE/GE	Geotechnical Engineer – licensed PE specializing in soil mechanics and foundations
EIT	Engineer-In-Training – graduate engineer who has passed the Fundamentals of engineering examination

American Concrete Institute (ACI) Certification

ACI-CCSI	Concrete Construction Special Inspector
ACI-LTT	Concrete Laboratory Testing Technician Level 1 or 2
ACI-STT	Concrete Strength Testing Technician
ACI-FTT	Concrete Field Testing Technician – Grade I

American Society of Non-Destructive Testing (ASNT) Certification

Non-Destructive Testing Technician – Level II or III

American Welding Society (AWS) Certification

AWS-CWI	Certified Welding Inspector

Exterior Design Institute (EDI) Certification

EDI-EIFS	Certified EIFS inspector

International Code Council (ICC) Certification

ICC-PCSI	Prestressed Concrete Special Inspector
ICC-RCSI	Reinforced Concrete Special Inspector
ICC-SSI	Soils Special Inspector
ICC-SFSI	Spray-applied Fireproofing Special Inspector
ICC-SMSI	Structural Masonry Special Inspector
ICC-SSBSI	Structural Steel and Bolting Special Inspector
ICC-SWSI	Structural Welding Special Inspector

National Institute for Certification in Engineering Technologies (NICET) Certification

NICET-CT	Concrete Technician – Levels I, II, III and IV
NICET-GET	Geotechnical Engineering Technician - Levels I, II, III and IV
NICET-ST	Soils Technician - Levels I, II, III and IV

Other

Listing of Required Structural Tests and Special Inspections

Required?	Structural Test or Special Inspection	Required Qualifications	Continuous	Periodic	Frequency of Periodic Test or Inspection
	Steel Construction (IBC-21 Section 1705.2; American Institute of Steel Construction: AISC 360-16 Chapter N, AISC 341-16 Chapter J)				
	Prior to Welding (AISC 360-16 Table N5.4-1)				
	1. Welder qualification records and continuity records				
	2. Welding procedure specifications (WPS) available				
	3. Manufacturer certifications for welding consumables available				
	4. Material identification (type/grade)				
	5. Welder identification system				
	6. Fit-up of groove welds (including joint geometry)				
	a. Joint preparation				
	b. Dimensions (alignment, root opening, root face, bevel)				
	c. Cleanliness (condition of steel surfaces)				
	d. Tacking (tack weld quality and location)				
	e. Backing type and fit (if applicable)				
	7. Fit-up of CJP (complete joist penetration) groove welds of HSS (hollow structural sections) T-, Y- and K-joints without backing (including joint geometry)				
	a. Joint preparation				
	b. Dimensions (alignment, root opening, root face, bevel)				
	c. Cleanliness (condition of steel surfaces)				
	d. Tacking (tack weld quality and location)				

Required?	Structural Test or Special Inspection	Required Qualifications	Continuous	Periodic	Frequency of Periodic Test or Inspection
	8. Configuration and finish of access holes				
	9. Fit-up of fillet welds				
	a. Dimensions (alignment, gaps at root)				
	b. Cleanliness (condition of steel surfaces)				
	c. Tacking (tack weld quality and location)				
	10. Check welding equipment				
	During Welding (AISC 360-16 Table N5.4-2)				
	1. Control and handling of welding consumables				
	a. Packaging				
	b. Exposure control				
	2. No welding over cracked tack welds				
	3. Environmental conditions				
	a. Wind speed within limits				
	b. Precipitation and temperature				
	4. WPS followed				
	a. Settings on welding equipment				
	b. Travel speed				
	c. Selected welding materials				
	d. Shielding gas type/flow rate				
	e. Preheat applied				
	f. Interpass temperature maintained (minimum/maximum)				
	g. Proper position (F, V, H, OH)				

Required?	Structural Test or Special Inspection	Required Qualifications	Continuous	Periodic	Frequency of Periodic Test or Inspection
	h. Intermix of filler metals avoided unless approved (reference: AISC 341-10 Table J6.2)				
	5. Use of qualified welders				
	6. Welding techniques				
	a. Interpass and final cleaning				
	b. Each pass within profile limitations				
	c. Each pass meets quality requirements				
	7. Placement and installation of headed stud anchors				
	After Welding (AISC 360-16 Table N5.4-3)				
	1. Welds cleaned				
	2. Size, length and location of welds				
	3. Welds meet visual acceptance criteria				
	a. Crack prohibition				
	b. Weld/base-metal fusion				
	c. Crater cross section				
	d. Weld profiles				
	e. Weld size				
	f. Undercut				
	g. Porosity				
	4. Arc strikes				
	5. k-area				
	6. Weld access holes in rolled heavy shapes and built-up heavy shapes				
	7. Backing removed and weld tabs removed (if required)				

Required?	Structural Test or Special Inspection	Required Qualifications	Continuous	Periodic	Frequency of Periodic Test or Inspection
	8. Repair activities				
	9. Document acceptance or rejection of welded joint or member				
	10. No prohibited welds have been added without the approval of the EOR (Engineer of Record)				
	11. Placement of reinforcing or contouring fillet welds (if required) (reference: AISC 341-16)				
	Nondestructive Testing (AISC 360-16 Section N5 and AISC 341-16 Section J6)				
	1. Risk Category II Structures - Perform Ultrasonic Testing on 10% of CJP groove welds in butt, T- and corner joints subject to transversely applied tension loading, in materials 5/16 inch thick or greater.				
	2. Risk Category III or IV Structures - Perform Ultrasonic Testing on all CJP groove welds subject to transversely applied tension loading in butt, T- and corner joints, in materials 5/16 inch thick or greater.				
	3. Access Holes – Perform Magnetic Particle Testing or Liquid Penetrant Testing when the flange thickness exceeds 2 inches for rolled shapes, or when the web thickness exceeds 2 inches for built-up shapes.				
	4. Welded Joints Subject to Fatigue				
	Nondestructive Testing (AISC 341-16 Section J6)				
	Column Splice and Column to Base Plate PJP Groove Weld (AISC 341-16 Section J6 2b)				
	1. Perform Ultrasonic Testing on 100% of PJP (partial-joint-penetration) groove welds in column splices and column to base plate welds				
	2. CJP Groove weld				
	3. Lamellar tearing				
	4. Beam cope and access hole				
	5. Reduced beam section repair				

Required?	Structural Test or Special Inspection	Required Qualifications	Continuous	Periodic	Frequency of Periodic Test or Inspection
	6. Weld tab removal				
	Prior to Bolting (AISC 360-16 Table N5.6-1)				
	These inspections are not required for snug-tight joints.				
	1. Manufacturer's certifications available for fastener materials				
	2. Fasteners marked in accordance with ASTM requirements				
	3. Correct fasteners selected for the joint detail (grade, type, bolt length if threads are to be excluded from shear plane)				
	4. Correct bolting procedure selected for joint detail				
	5. Connecting elements, including the appropriate faying surface condition and hole preparation, if specified, meet applicable requirements				
	6. Pre-installation verification testing by installation personnel observed and documented for fastener assemblies and methods used				
	7. Protected storage provided for bolts, nuts, washers and other fastener components				
	During Bolting (AISC 360-16 Table N5.6-2)				
	These inspections are not required for snug-tight joints.				
	These inspections are not required for pretensioned joints and slip-critical joints, when the installer is using the turn-of-nut method with matchmarking techniques, the direct-tension-indicator method, or the twist-off-type tension control bolt method.				
	1. Fastener assemblies, of suitable condition, placed in all holes and washers (if required) are positioned as required				
	2. Joint brought to the snug-tight condition prior to the pretensioning operation				
	3. Fastener component not turned by the wrench prevented from rotating				

Required?	Structural Test or Special Inspection	Required Qualifications	Continuous	Periodic	Frequency of Periodic Test or Inspection
	4. Fasteners are pretensioned in accordance with the RCSC (Resource Council on Structural Connections) Specification, progressing systematically from the most rigid point toward the free edges				
	After Bolting (AISC 360-16 Table N5.6-2)				
	Document acceptance or rejection of bolted connections.				
	Other Inspection Tasks (AISC 360-16 Section N5.7)				
	1. Verify compliance of fabricated steel with the details shown on the approved shop drawings.				
	2. Verify compliance of the erected steel frame with the details shown on the approved erection drawings, including braces, stiffeners, member locations and joint details.				
	3. Anchor rods and other embedments support structural steel				
	a. Verify the diameter, grade, type and length of the anchor rod or embedded item.				
	b. Verify the extent or depth of embedment into the concrete.				
	4. RBS (reduce beam section) requirements, if applicable (AISC 341-16)				
	a. Contour and finish				
	b. Dimensional tolerances				
	5. Protected zone - no holes and unapproved attachments made by fabricator or erector, as applicable. (AISC 341-16)				
	6. H-piles - Protected zone - no holes and unapproved attachments made by the responsible contractor, as applicable. (AISC 341-16)				
	Cold-formed Steel Deck (IBC-21 1705.2.2)				
	1. Special inspections in accordance with QA/QC-2017 Standard for Quality control (QC) and				

Required?	Structural Test or Special Inspection	Required Qualifications	Continuous	Periodic	Frequency of Periodic Test or Inspection
	Quality assurance (QA) for Installation of Steel Deck				
	Open-Web steel Joists and Joist Girders (IBC-21 Table 1705.2.3)				
	1. Installation of open-web steel joists and joist girders.				
	a. End connections - welding or bolted				
	b. Bridging - horizontal or diagonal				
	1. Standard bridging				
	2. Bridging that differs from the SJI (Steel Joist Institute) specifications listed in Section 2207.1.				
	Inspection of Composite Structures Prior to Concrete Placement (AISC 341-16 Table J9.1)				
	1. Material identification of reinforcing steel (Type/Grade)				
	2. Determination of carbon equivalent for reinforcing steel other than ASTM A706				
	3. Proper reinforcing steel size, spacing and orientation				
	4. Reinforcing steel has not been rebent in the field				
	5. Reinforcing steel has been tied and supported as required				
	6. Required reinforcing steel clearances have been provided				
	7. Composite member has required size				
	Inspection of Composite Structures During Concrete Placement (AISC 341-16 Table J9.2)				
	1. Concrete: Material identification (mix design, compressive strength, maximum large aggregate size, maximum slump)				
	2. Limits on water added at the truck or pump				
	3. Proper placement techniques to limit segregation				

Required?	Structural Test or Special Inspection	Required Qualifications	Continuous	Periodic	Frequency of Periodic Test or Inspection
	Inspection of Composite Structures During Concrete Placement (AISC 341-16 Table J9.2)				
	1. Achievement of minimum specified concrete compressive				
	Cold-formed Steel Trusses Spanning 60-feet or Greater (IBC-21 Section 1705.2.4)				
	1. Verify temporary installation restraint/bracing installed in accordance with the approved shop drawings.				
	2. Verify permanent individual truss member restraint/bracing installed in accordance with the approved shop drawings.				
	Concrete Construction (IBC-21 Section 1705.3)				
	1. Inspect reinforcing steel, including prestressing tendons, and placement.				
	2. Inspection of reinforcing steel welding				
	a. Verify weldability of reinforcing bars other than ASTM A706.				
	b. Inspect single pass fillet welds, maximum 5/16 inch.				
	c. Inspect all other welds.				
	3. Inspection of anchors cast in concrete.				
	4. Inspection of anchors post-installed in hardened concrete members.				
	a. Adhesive anchors installed in horizontally or upwardly inclined orientations to resist sustained tension load				
	b. Mechanical anchors and adhesive anchors not defined in 4 a				
	5. Verify use of approved design mix.			X	
	6. Prior to placement fabricate specimens for strength tests, perform slump and air content tests, and determine the temperature of the concrete.		X		

Required?	Structural Test or Special Inspection	Required Qualifications	Continuous	Periodic	Frequency of Periodic Test or Inspection
	7. Inspect concrete and shotcrete placement for proper application techniques.				
	8. Inspect for maintenance of specified curing temperature and techniques.				
	9. Inspection of prestressed concrete:				
	a. Application of prestressing forces				
	b. Grouting of bonded prestressing tendons in the seismic-force-resisting system.				
	10. Erection of precast structural members				
	11. For precast concrete diaphragm connections or reinforcement at joints classified as moderate or high deformability elements (MDE or HDE) in structures assigned to Seismic Design Category C, D, E, or F, inspect such connections and reinforcement in the field for:				
	a. Installation of the embedded parts				
	b. Completion of the continuity of reinforcement across joints				
	c. Completion of connections in the field				
	12. Inspect installation tolerances of precast concrete diaphragm connections for compliance with ACI 550.5 (American Concrete Institute).				
	13. Verification of in-situ concrete strength, prior to stressing of tendons in post-tensioned concrete and prior to removal of shores and forms from beams and structural slabs.				
	14. Inspection formwork for shape, location and dimensions of the concrete member being formed.				
	Masonry Construction (IBC-21 Section 1705.4)				
	1. Inspect masonry construction in accordance with IBC-21 Section 1705.4 and TMS 602-13 (The Masonry Society)/ACI 530.1-13 Article 1.6.				
	Level A Quality Assurance				

Required?	Structural Test or Special Inspection	Required Qualifications	Continuous	Periodic	Frequency of Periodic Test or Inspection
	Tests: None.				
	Inspection: Verify compliance with the approved submittal and project specifications.				
	Level B Quality Assurance				
	Tests:				
	1. Verify slump flow and Visual Stability Index (VSI) as delivered to the project site in accordance with TMS 602-13/ACI 530.1-13 Specification Article 1.5B.1.b.3 for self-consolidating grout.				
	2. Verify f'm and f'aac in accordance with TMS 602-13/ACI 530.1-13 Specification Article 1.4B prior to construction, except where specifically exempted.				
	Inspection:				
	1. Verify compliance with the approved submittals and project specifications.			X	
	2. At the start of masonry construction, verify:				
	a. Proportions of site-prepared mortar.			X	
	b. Construction of mortar joints.			X	
	c. Grade and size of prestressing tendons and anchorages.				
	d. Location of reinforcement, connectors, prestressing tendons and anchorages.				
	e. Prestressing technique.				
	f. Properties of thin-bed mortar for AAC (autoclaved aerated concrete) masonry. (Continuous inspection is required for the first 5000 square feet of AAC masonry. Periodic inspection is required after the first 5000 square feet of AAC masonry.)				
	3. Prior to grouting, verify:				
	a. Grout space is clean.			X	

Required?	Structural Test or Special Inspection	Required Qualifications	Continuous	Periodic	Frequency of Periodic Test or Inspection
	b. Grade, type and size of reinforcement and anchor bolts, and prestressing tendons and anchorages.				
	c. Placement of reinforcing and connectors, and prestressing tendons and anchorages.				
	d. Proportions of site-prepared grout and prestressing grout for bonded tendons.				
	e. Construction of mortar joints.				
	4. During masonry construction, verify:				
	a. Size and location of structural members.				
	b. Type, size and location of anchors, including other details of anchorage of masonry to structural members, frames, or other construction.				
	c. Welding of reinforcement.				
	d. Preparation, construction and protection of masonry during cold weather (temperature below 40 degrees Fahrenheit) or hot weather (temperature above 90 degrees Fahrenheit).				
	e. Application and measurement of prestressing force.				
	f. Placement of grout and prestressing grout for bonded tendons is in compliance.				
	g. Placement of AAC masonry units and construction of thin-bed mortar joints. (Continuous inspection is required for the first 5000 square feet of AAC masonry. Periodic inspection is required after the first 5000 square feet of AAC masonry.)				
	5. Observe preparation of grout specimens, mortar specimens and/or prisms.				
	Level C Quality Assurance				
	Tests:				
	1. Verify f'm and f'aac in accordance with TMS 602-13/ACI 530.1-13/ASCE 6-13 Specification				

Required?	Structural Test or Special Inspection	Required Qualifications	Continuous	Periodic	Frequency of Periodic Test or Inspection
	Article 1.4B prior to construction, and for every 5000 square feet during construction.				
	2. Verify proportions of materials in premixed or pre-blended mortar, prestressing grout, and grout other than self-consolidating grout as delivered to the project site.				
	3. Verify slump flow and Visual Stability Index (VSI) as delivered to the project site in accordance with TMS 602-13/ACI 530.1-13/ASCE 6-13 Specification Article 1.5B.1.b.3 for self-consolidating grout.				
	Inspection:				
	1. Verify compliance with the approved submittals and project specifications.				
	2. Verify:				
	a. Proportions of site-prepared mortar, grout and prestressing grout for bonded tendons.				
	b. Grade, type and size of reinforcement and anchor bolts, and prestressing tendons and anchorages.				
	c. Placement of masonry units and construction of mortar joints.				
	d. Placement of reinforcement, connectors and prestressing tendons and anchorages.				
	e. Grout space prior to grouting.				
	f. Placement of grout and prestressing grout for bonded tendons.				
	g. Size and location of structural elements.				
	h. Type, size and location of anchors, including other details of anchorage of masonry to structural members, frames or other construction.				
	i. Welding of reinforcement.				
	j. Preparation, construction and protection of masonry during cold weather (temperature below 40 degrees Fahrenheit) or hot				

Required?	Structural Test or Special Inspection	Required Qualifications	Continuous	Periodic	Frequency of Periodic Test or Inspection
	weather (temperature above 90 degrees Fahrenheit).				
	k. Application and measurement of prestressing force.				
	l. Placement of AAC masonry units and construction of thin-bed mortar joints.				
	m. Properties of thin-bed mortar for AAC masonry.				
	3. Observe preparation of grout specimens, mortar specimens and/or prisms.				
	Wood Construction (IBC-21 Section 1705.5)				
	1. Inspect prefabricated wood structural elements in accordance with Section 1704.2.5.				
	2. High load diaphragms:				
	a. Verify sheathing grade and thickness.				
	b. Verify nominal size of framing members at adjoining panel edges.				
	c. Verify nail or staple diameter and length.				
	d. Verify number of fastener lines.				
	e. Verify spacing between fasteners in each line and at panel edges.				
	3. Shearwalls:				
	a. Verify sheathing grade and thickness.				
	b. Verify nominal size of framing members at adjoining panel edges.				
	c. Verify nail or staple diameter and length.				
	d. Verify number of fastener lines.				
	e. Verify spacing between fasteners in each line and at panel edges.				
	f. Location and size of holdowns.				

Required?	Structural Test or Special Inspection	Required Qualifications	Continuous	Periodic	Frequency of Periodic Test or Inspection
	4. Verify nailing, bolting, anchoring and fastening of:				
	a. Drag struts and collectors.				
	b. Braces.				
	c. Hold-downs.				
	5. Metal-plate-connected wood trusses spanning 60 feet or greater:				
	a. Verify temporary installation restraint/bracing installed in accordance with the approved shop drawings.				
	b. Verify permanent individual truss member restraint/bracing installed in accordance with the approved shop drawings.				
	Soils (IBC-21 Section 1705.6)				
	1. Verify materials below shallow foundations are adequate to achieve the required bearing capacity.				
	2. Verify excavations are extended to proper depth and have reached proper material.			X	
	3. Perform classification and testing of compacted fill materials.			X	
	4. During fill placement, verify use of proper materials and procedure in accordance with the provisions of the approved geotechnical report. Verify densities and lift thicknesses during placement and compaction of compacted fill.		X		
	5. Prior to placement of compacted fill, inspect subgrade and verify that site has been prepared properly.			X	
	Driven Deep Foundation Elements (IBC-21 Section 1705.7)				
	1. Verify element materials, sizes and lengths.				
	2. Determine capacities of test elements and conduct additional load tests when required. Refer to project specifications.				

Required?	Structural Test or Special Inspection	Required Qualifications	Continuous	Periodic	Frequency of Periodic Test or Inspection
	3. Inspect driving operations and maintain complete and accurate records for each element.				
	4. Verify element locations and plumbness.				
	a. Verify type and size of hammer.				
	b. Record number of blows per foot of penetration.				
	c. Determine required penetration to achieve specified capacity.				
	d. Record pile tip and butt elevations.				
	e. Document any damage to any foundation element.				
	5. For steel piling, perform additional inspection in accordance with Section 1705.2 and AISC 341-16, Table J10.1.				
	6. For concrete elements and concrete-filled elements, perform additional inspections in accordance with Section 1705.3.				
	7. For specialty elements, perform additional inspections as required in the project specifications.				
	Cast-in-Place Deep Foundation (IBC-21 Section 1705.8)				
	1. Inspect drilling operations and maintain complete and accurate records for each element.				
	2. Verify element locations and plumbness.				
	a. Verify element diameter.				
	b. Verify bell diameter (if applicable).				
	c. Verify element lengths.				
	d. Verify embedment depth into bedrock (if applicable).				
	e. Verify adequate end-bearing strata capacity.				

Required?	Structural Test or Special Inspection	Required Qualifications	Continuous	Periodic	Frequency of Periodic Test or Inspection
	f. Record concrete or grout volumes.				
	3. For concrete elements, perform additional inspections in accordance with Section 1705.3.				
	Helical Piles (IBC-21 Section 1705.10)				
	1. Verify pile locations.				
	a. Verify installation equipment used.				
	b. Verify pile dimensions.				
	c. Verify tip elevations.				
	d. Verify final depth.				
	e. Verify final installation torque.				
	f. Other data as required by the project specifications.				
	Fabricated Items (IBC-21 Section 1705.11)				
	1. Inspect fabricated items in accordance with Section 1704.2.5.				
	Wind Resistance (IBC-21 Section 1705.12)				
	1. Provide inspections when required by Section 1705.12.				
	Seismic Resistance (IBC-21 Section 1705.13)				
	1. Provide inspections when required by Section 1705.13.				
	Testing and Qualification for Seismic Resistance (IBC-21 Section 1705.14)				
	1. Test and qualify seismic resistance in accordance with IBC-21 Section 1705.14 and the project specifications.				

Required?	Structural Test or Special Inspection	Required Qualifications	Continuous	Periodic	Frequency of Periodic Test or Inspection
	Sprayed Fire-Resistant Materials (IBC-21 Section 1705.15)				
	1. Inspect sprayed fire-resistant materials in accordance with IBC-21 Section 1705.15 and the project specifications.				
	Mastic and Intumescent Fire-Resistant Coatings (IBC-21 Section 1705.16)				
	1. Perform inspections in accordance with AWCI 12-B (Association of the Wall and Ceiling Industry) and IBC-21 Section 1705.16.				
	Exterior Insulation and Finish Systems (EIFS) (IBC-21 Section 1705.17)				
	1. Perform inspections in accordance with project specifications and IBC-21 Section 1705.17.				
	Fire-Resistant Penetrations and Joints (IBC-21 Section 1705.18)				
	1. Perform inspections in accordance with project specifications and IBC-21 Section 1705.18.				
	Smoke Control (IBC-21 Section 1705.19)				
	1. Perform testing in accordance with project specifications and IBC-21 Section 1705.19.				
	Sealing of Mass Timber (IBC-21 Section 1705.20)				
	1. Perform testing in accordance with project specifications and IBC-21 Section 1705.20.				

Accessibility Inspection Report - Buildings & Facilities

(Contractor Quality Control (CQC) & Final)

National Park Service (NPS) - Denver Service Center (DSC) | 8-2-24

Park:

Project:

Contract Number:

Date of Inspection:

Project Management Information System (PMIS) Number:

Report Number:

Final Inspection: ☐Yes ☐No

Notes & Requirements

This report covers the most common accessibility requirements. Expand this form for elements not shown. Inspect for compliance with requirements of the International Building Code (IBC) and Architectural Barriers Act Accessibility Standards (ABAAS), latest available release. Use applicable sections for each inspection. The inspection form is not comprehensive for all IBC or ABAAS requirements or all designs. Refer to IBC Chapter 11 for additional requirements (possibly conflicting, use most restrictive requirements in this case). *(Images shown on this report are screen captures from Access-Board.gov > ABA Accessbility Standards.)*

Measuring Outdoor Improvements

A measuring device shall be capable of measuring to a precision of 1/16 inch. Angular or slope measuring devices shall be capable of measuring to a precision of 0.1 degree. Elevation measuring devices shall be capable of measuring to a precision of 0.01 feet. Measure slope/cross-slope by subtracting elevations and dividing by distance. Measure flatness using a 10-foot metal straightedge with not to exceed 1/4-inch space between hard surface and metal edge. **ABAAS requirements identified refer to post construction measurements which include construction tolerances.**

Upon completion of work, Construction Contractor shall complete a final accessibility inspection. List deficiencies in Section 10 and add to punch list. Correct deficiencies in a timely manner. ABAAS construction non-compliance will be replaced at Construction Contractor's expense unless authorized by Contracting Officer (CO). File this report with CQC Daily Report in official project files.

1. Parking Spaces & Passenger Loading Zones

ABA Accessibility Standards > Chapter 4 Accessible Routes > 406 Curb Ramps & Chapter 5 General Site and Building Elements > 502 Parking Spaces:

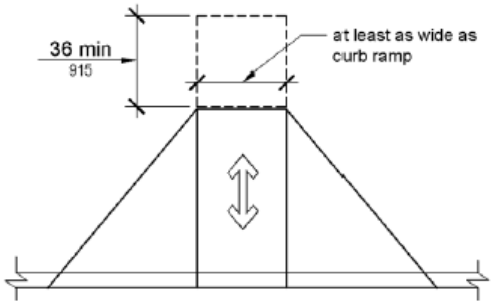

Figure 406.4 Landings at the Top of Curb Ramps

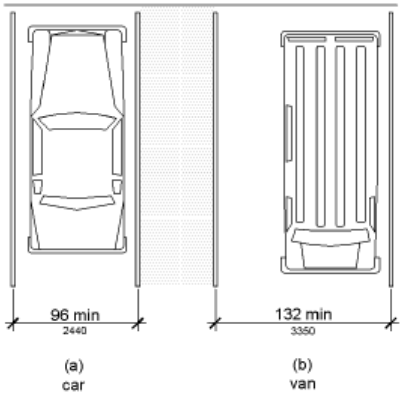

Figure 502.2 Vehicle Parking Spaces

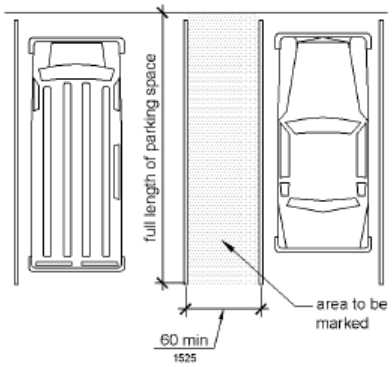

Figure 502.3 Parking Space Access Aisle

Procedure:

Attach copy of grading plan with each accessible parking space and passenger loading zone running and cross slope readings noted. Measure slopes and cross-slopes at 3-foot intervals.

Location/Notes:

A. ☐Yes ☐No ☐Not Applicable

Accessible spaces and access aisles running slope and cross slope is 1:48 (2%) or less. Measure at 3-foot intervals.

B. ☐Yes ☐No ☐Not Applicable
Car spaces are 96 inches wide minimum and van spaces 132 inches wide measured to striping centerline or face of curb.

C. ☐Yes ☐No ☐Not Applicable
Access aisles are 60 inches wide minimum measured to striping centerline and adjoin an accessible route.

D. ☐Yes ☐No ☐Not Applicable
Curb ramp running slope is 1:12 (8.33%) or less and cross slope is 1:48 (2%) or less. Measure at 3-foot intervals.

E. ☐Yes ☐No ☐Not Applicable
Curb ramp has a 36-inch minimum landing length at top and running slope and cross slope are 1:48 (2%) or less.

F. ☐Yes ☐No ☐Not Applicable
Curb ramp flared side slopes are 1:10 (10%) or less.

G. ☐Yes ☐No ☐Not Applicable
Passenger loading zone (drop-off area) running slope and cross slope are 1:48 (2%) or less. Area has flush curb.

Inspection Results:

2. Walking Surfaces & Accessible Routes

ABA Accessibility Standards > Chapter 3 Building Blocks > 302 Floor or Ground Surfaces & 303 Changes in Level:

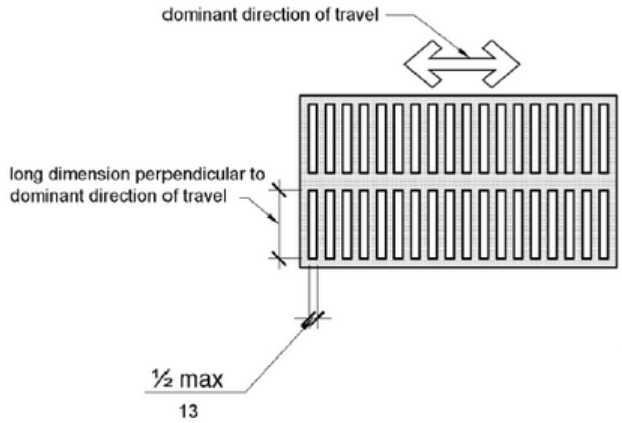

Figure 302.3 Elongated Openings in Floor or Ground Surfaces

Figure 303.2 Vertical Change in Level

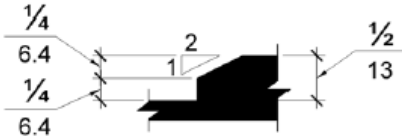

Figure 303.3 Beveled Change in Level

Procedure:

The accessible route is the pedestrian route from accessible parking and passenger loading zones to and between accessible facilities and features. Attach accessible route and/or grading plan with accessible route highlighted and running and cross slope readings noted.

Location/Notes:

A. ☐Yes ☐No ☐Not Applicable
Floor and ground surfaces are stable, firm, and slip resistant.
ABA Accessibility Standards > *Chapter 3 Building Blocks* > *302 Floor or Ground Surfaces*

B. ☐Yes ☐No ☐Not Applicable
Running slope of all walking surfaces on accessible route is 1:20 (5%) or less. Measure at 3-foot intervals.

C. ☐Yes ☐No ☐Not Applicable
Cross slope of walking surfaces is 1:48 (2%) or less. Measure at 3-foot intervals.

D. ☐Yes ☐No ☐Not Applicable
Clear widths of walking surfaces are 36 inches minimum.

E. ☐Yes ☐No ☐Not Applicable
Elongated openings in floor or ground surfaces are 1/2 inch wide or less.

F. ☐Yes ☐No ☐Not Applicable
Curb ramp flared side slopes are 1:10 (10%) or less.

G. ☐Yes ☐No ☐Not Applicable
Elongated openings are perpendicular to direction of travel.

H. ☐Yes ☐No ☐Not Applicable
Accessible route surface changes are 1/2 inch or less with 1/4-inch maximum vertical change.

I. ☐Yes ☐No ☐Not Applicable
Floor drains and grates on accessible route meet all above requirements.

Inspection Results:

3. Ramps

ABA Accessibility Standards > Chapter 4 Accessible Routes > 405 Ramps:

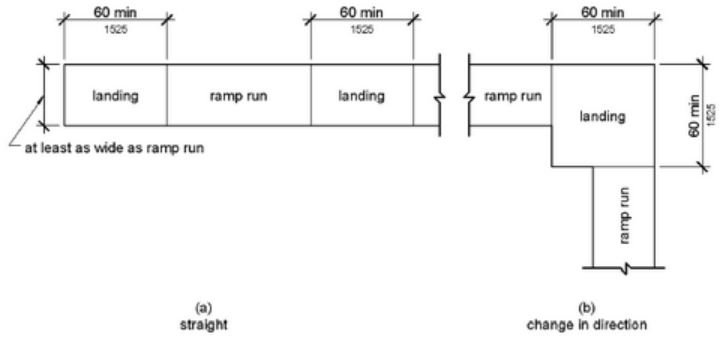

Figure 405.7 Ramp Landings

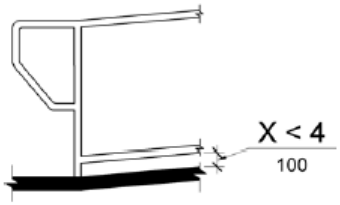

Figure 405.9.2 Curb or Barrier Edge Protection

Procedure:

Ramps are walking surfaces on accessible route steeper than 1:20 (5%) but less than 1:12 (8.33%). Attach grading plan with running and cross slope readings noted.

Location/Notes:

_____

_____

_____

A. ☐Yes ☐No ☐Not Applicable
Running slope is 1:12 (8.33%) or less. Measure at 3-foot intervals.

_____

B. ☐Yes ☐No ☐Not Applicable
Cross slope is 1:48 (2%) or less. Measure at 3-foot intervals.

_____

C. ☐Yes ☐No ☐Not Applicable
Clear width is 36 inches minimum and clear width between handrails is 36 inches minimum.

_____

D. ☐Yes ☐No ☐Not Applicable
Rise for ramp run is 30 inches maximum.

_____

E. ☐Yes ☐No ☐Not Applicable
Ramps have landings at top and bottom of each ramp run.

_____

F. ☐Yes ☐No ☐Not Applicable
Landing clear length is 60 inches minimum and running slope and cross slope of landing is 1:48 (2%) or less.

_____

G. ☐Yes ☐No ☐Not Applicable
Ramps with a rise greater than 6 inches have handrails.

_____

H. ☐Yes ☐No ☐Not Applicable
Ramps and landings have edge protection on both sides preventing passage of 4-inch diameter sphere.

Inspection Results:

4. Handrails

ABA Accessibility Standards > Chapter 5 General Site and Building Elements > 505 Handrails:

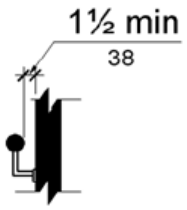

Figure 505.5 Handrail Clearance

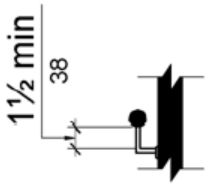

Figure 505.6 Horizontal Projections Below Gripping Surface

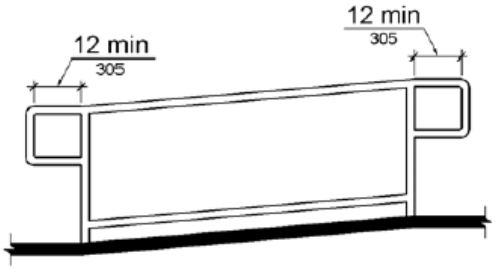

Figure 505.10.1 Top and Bottom Handrail Extension at Ramps

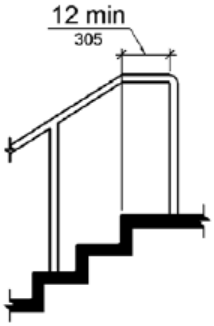

Figure 505.10.2 Top Handrail Extension at Stairs

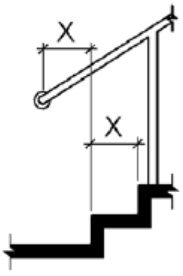

Note: X = tread depth

Figure 505.10.3 Bottom Handrail Extension at Stairs

Procedure:

Verify each handrail.

Location/Notes:

A. ☐Yes ☐No ☐Not Applicable
Top of handrail is 34 inches minimum and 38 inches maximum vertically above walking surfaces.

B. ☐Yes ☐No ☐Not Applicable
Handrails extend 12 inches minimum beyond top and bottom of ramp runs.

C. ☐Yes ☐No ☐Not Applicable
Free standing handrails have edge protection preventing passage of 4-inch diameter sphere.

D. ☐Yes ☐No ☐Not Applicable
Handrails extend horizontally 12 inches minimum at top of stairs.

E. ☐Yes ☐No ☐Not Applicable
Handrails extend at slope of stair flight at bottom of stairs minimum one tread depth beyond last riser.

F. ☐Yes ☐No ☐Not Applicable
Handrail clearance is 1-1/2 inches clear minimum to walls and above horizontal attachments.

Inspection Results:

5. Drinking Fountains

ABA Accessibility Standards > Chapter 3 Building Blocks > 307 Protruding Objects:

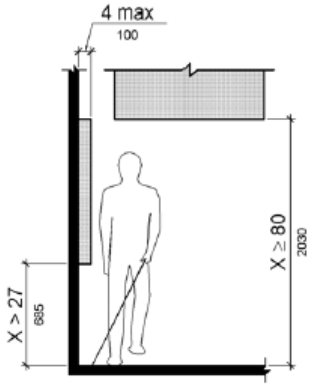

Figure 307.2 Limits of Protruding Objects

Procedure:

Verify drinking fountains do not create a protruding object. (Two spout heights required for each drinking fountain.)

Location/Notes:

A. ☐Yes ☐No ☐Not Applicable
Spout outlet is 36 inches maximum above finish floor or ground for wheelchair accessible spout.

B. ☐Yes ☐No ☐Not Applicable
Spout outlet for standing persons is 38 inches minimum and 43 inches maximum above finish floor.

C. ☐Yes ☐No ☐Not Applicable
Drinking fountain is recessed or has exactly 27 inches maximum space from floor to bottom of fountain. (Fountain must meet ABAAS requirements for knee room and requirements for persons with visual disabilities using a cane.)

Inspection Results:

6. Toilet Compartments

ABA Accessibility Standards > Chapter 6 Plumbing Elements and Facilities > 604 Water Closets and Toilet Compartments, 605 Urinals & 609 Grab Bars:

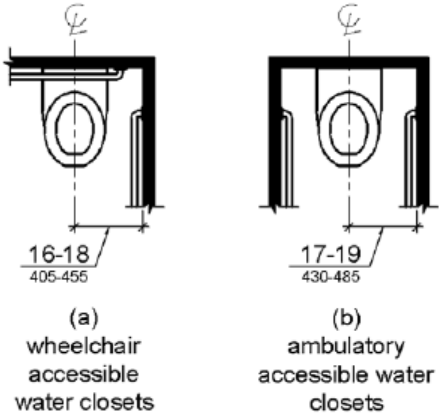

Figure 604.2 Water Closet Location

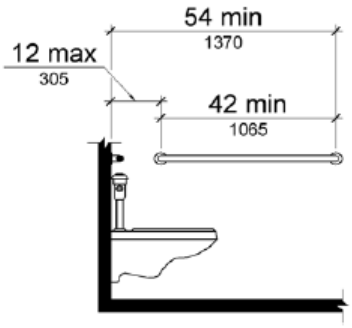

Figure 604.5.1 Side Wall Grab Bar at Water Closets

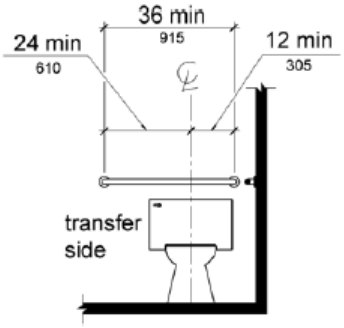

Figure 604.5.2 Rear Wall Grab Bar at Water Closets

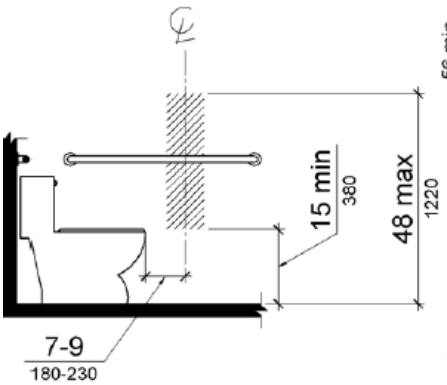

Figure 604.7 Dispenser Outlet Location

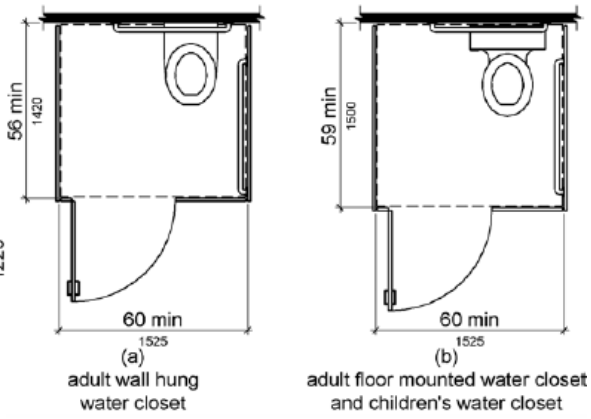

Figure 604.8.1.1 Size of Wheelchair Accessible Toilet Compartment

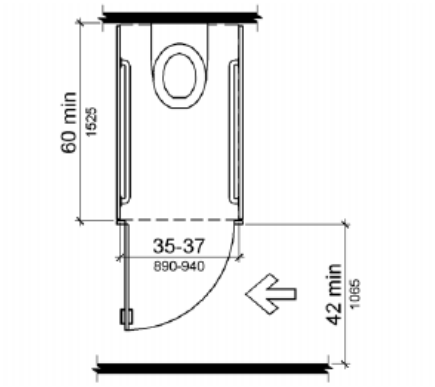

Figure 604.8.2 Ambulatory Accessible Toilet Compartment

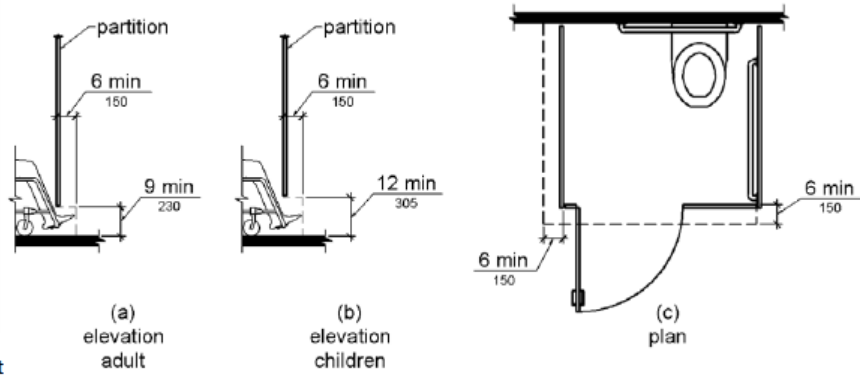

Figure 604.8.1.4 Wheelchair Accessible Toilet Compartment Toe Clearance

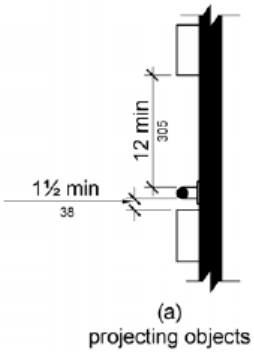

Figure 609.3 Spacing of Grab Bars

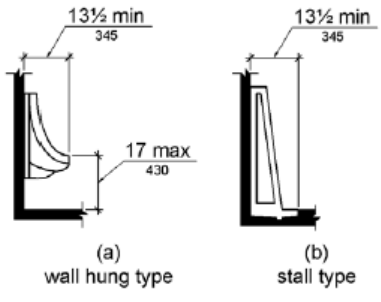

Figure 605.2 Height and Depth of Urinals

Procedure:

For toilet compartments, attach floor plan and note as-built dimensions on diagrams below. (Use additional sheet for each restroom.)

Location/Notes:

_____

_____

_____

A. ☐Yes ☐No ☐Not Applicable
Wheelchair accessible compartment is 60 inches wide minimum and 59 inches deep minimum with wheelchair clear space adjacent to toilet.

_____

B. ☐Yes ☐No ☐Not Applicable
Ambulatory stall is 60 inches deep minimum, width of 35 inches minimum and 37 inches maximum, and toilet is centered in stall.

_____

C. ☐Yes ☐No ☐Not Applicable
Accessible compartment has 32-inch wide door opening minimum with door opening outward, or additional wheelchair clear space for door opening inward.

_____

D. ☐Yes ☐No ☐Not Applicable
Seat height is 17 inches minimum and 19 inches maximum measured to top of seat.

_____

E. ☐Yes ☐No ☐Not Applicable
Urinal rim is 17 inches maximum above finish floor and 13-1/2 inches deep minimum.

_____

F. ☐Yes ☐No ☐Not Applicable
Urinal has a clear floor space of 30 inches wide by 48 inches long minimum for forward approach.

_____

G. ☐Yes ☐No ☐Not Applicable
Side wall grab bar is 42 inches long minimum, located 12 inches maximum from rear wall.

_____

H. ☐Yes ☐No ☐Not Applicable
Rear wall grab bar is 36 inches long minimum, extends from toilet centerline 12 inches minimum one side towards partition or wall and 24 inches minimum other side.

_____

I. ☐Yes ☐No ☐Not Applicable
Grab bar height is 33 inches minimum and 36 inches maximum to top of gripping surface.

_____

J. ☐Yes ☐No ☐Not Applicable
Toilet paper dispensers are 7 inches minimum and 9 inches maximum in front of toilet to centerline of dispenser.

_____

K. ☐Yes ☐No ☐Not Applicable
Toilet paper dispenser outlet is 15 inches minimum and 48 inches maximum above finish floor.

_____

L. ☐Yes ☐No ☐Not Applicable
Centerline of wheelchair stall toilet is 16 inches minimum to 18 inches maximum from side wall.

_____

M. ☐Yes ☐No ☐Not Applicable
Sinks and counters are 34 inches maximum above floor with 27 inches minimum knee space. Drainpipes are insulated or concealed.

_____

N. ☐Yes ☐No ☐Not Applicable
Space between grab bar and wall/partition and projecting objects below is 1-1/2 inches minimum. Space above is 12 inches minimum.

_____

O. ☐Yes ☐No ☐Not Applicable
Wheelchair accessible compartment and ambulatory stall have door pulls on both sides of door near latch.

_____

P. ☐Yes ☐No ☐Not Applicable
Hand dryers, towel and soap dispenser outlets are 15 inches minimum and 48 inches maximum above floor. Bottom edge of reflecting mirror surface above sink or countertops are 40 inches maximum above finished floor.

_____

Inspection Results:

_____

_____

_____

7. Service Counters and Dining and Work Surfaces

ABA Accessibility Standards > Chapter 9 Built-In Elements > 904 Check-Out Aisles and Sales and Service Counters & 902 Dining Surfaces and Work Surfaces:

Procedure:

Service counters and dining and work surfaces are parallel or forward approach. NPS treats service counters as possible employee work areas which are required to be 34 inches maximum.

Location/Notes:

_____

_____

_____

A. ☐Yes ☐No ☐Not Applicable
Parallel Approach. Counter is 36 inches long minimum and 36 inches high maximum.

_____

B. ☐Yes ☐No ☐Not Applicable
Forward Approach. Counter surface is 30 inches long minimum and 36 inches high maximum with knee space under counter. See ABAAS 306 for adequate depth and toe clearance.

_____

C. ☐Yes ☐No ☐Not Applicable
Tops of dining and work surfaces are 28 inches minimum and 34 inches maximum above finished floor with adequate knee and toe clearance.

_____

Inspection Results:

_____

_____

_____

8. Doors

ABA Accessibility Standards > Chapter 4 Accessible Routes > 404 Doors, Doorways, and Gates:

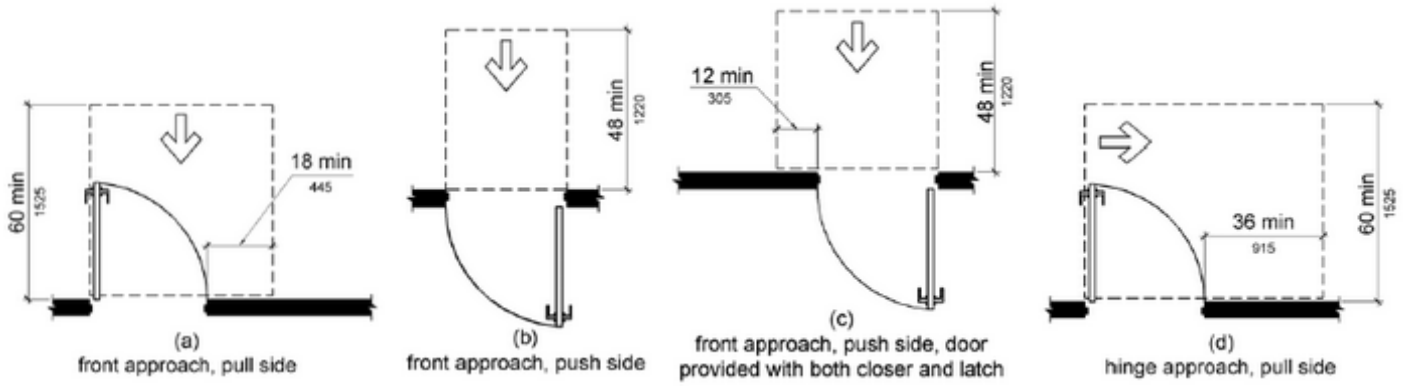

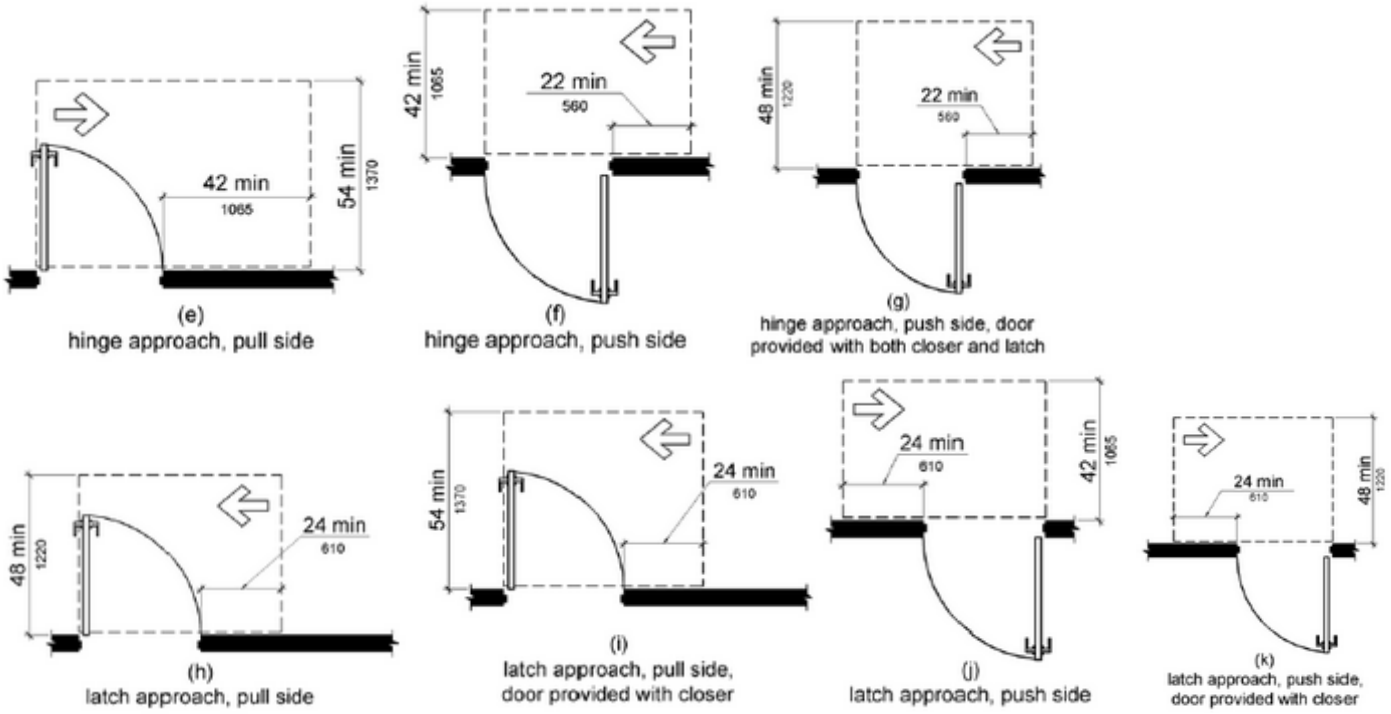

Figure 404.2.4.1 Maneuvering Clearances at Manual Swinging Doors and Gates

Procedure:

Attach accessible route plan with accessible door dimensions and threshold heights.

Location/Notes:

_____

_____

_____

A. ☐Yes ☐No ☐Not Applicable
Door openings on accessible routes provide clear width of 32 inches minimum.

_____

B. ☐Yes ☐No ☐Not Applicable
Door closers move door from open position of 90 degrees to 12 degrees from latch is 5 seconds minimum.

_____

C. ☐Yes ☐No ☐Not Applicable
Spring hinge doors close from open position of 70 degrees to closed position in 1.5 seconds minimum.

_____

D. ☐Yes ☐No ☐Not Applicable
Fire doors have minimum opening force allowable by appropriate administrative authority.

_____

E. ☐Yes ☐No ☐Not Applicable
Interior door and gate hardware located 34 inches minimum and 48 inches maximum above finished floor and operable with hinged doors having opening force of 5 pounds maximum.

_____

F. ☐Yes ☐No ☐Not Applicable
Thresholds at doors on accessible route are beveled 1/2 inch or less with 1/4-inch maximum vertical change.

G. ☐Yes ☐No ☐Not Applicable
Clear floor and wall space provide maneuvering clearances required (all doors on accessible route).

Inspection Results:

9. Signs

ABA Accessibility Standards > Chapter 7 Communication Elements and Features > 703 Signs:

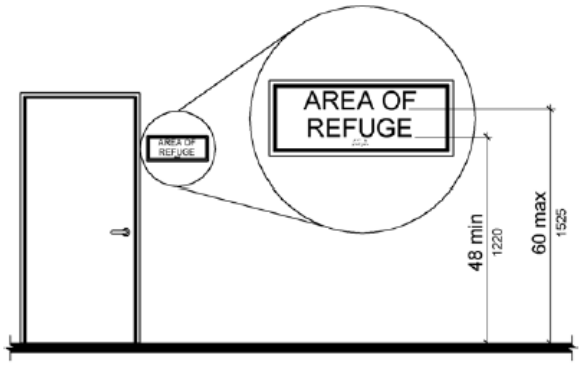

Figure 703.4.1 Height of Tactile Characters Above Finish Floor or Ground

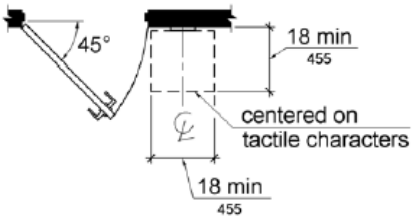

Figure 703.4.2 Location of Tactile Signs at Doors

Location/Notes:

A. ☐Yes ☐No ☐Not Applicable
Parking space signs are 60 inches minimum above finish ground surface measured to bottom of sign.

B. ☐Yes ☐No ☐Not Applicable
Van parking space sign includes designation "van accessible."

C. ☐Yes ☐No ☐Not Applicable
Tactile characters on signs are 48 inches minimum from lowest tactile character and 60 inches maximum above finished floor from baseline of hightest tactile character.

D. ☐Yes ☐No ☐Not Applicable
Visual characters are 40 inches minimum above finished floor.

E. ☐Yes ☐No ☐Not Applicable
Sign is located alongside door at latch side.

_____

F. ☐Yes ☐No ☐Not Applicable
Sign is located with clear floor space of 18 inches by 18 inches minimum.

_____

Inspection Results:

_____

_____

_____

10. Other Accessible Features not Covered by Report

Procedure:

Inspect elevators, lifts, elements for children, etc. Inspect for compliance with ABAAS requirements.

Location/Notes:

_____

_____

_____

Inspection Results:

_____

_____

_____

11. Punch List Items - Summary of Non-Conforming Inspection Results

Add deficiencies. Correct deficiencies in timely manner.

1. Deficiency: _____

   Corrective Actions Needed/Taken: _____

   _____

2. Deficiency: _____

   Corrective Actions Needed/Taken: _____

   _____

3. Deficiency: _____

   Corrective Actions Needed/Taken: _____

   _____

4. Deficiency: _____

   Corrective Actions Needed/Taken: _____

   _____

5. Deficiency: _____

   Corrective Actions Needed/Taken: _____

   _____

6. Deficiency: _____

   Corrective Actions Needed/Taken: _____

   _____

7. Deficiency: _____

   Corrective Actions Needed/Taken: _____

   _____

8. Deficiency: _____

   Corrective Actions Needed/Taken: _____

   _____

9. Deficiency: _____

   Corrective Actions Needed/Taken: _____

   _____

10. Deficiency: _____

    Corrective Actions Needed/Taken: _____

    _____

12. Photographs & Sketches

Attach to report as needed. Identify location of photographs and sketches.

Certification

I certify this inspection report is complete and correct and in compliance with contract documents.

_____

Inspector Name (Print) | Inspector Signature | Date

GOGA-244458 / FOPO-186401

SECTION 01 42 00 – REFERENCE STANDARDS

PART 1 - GENERAL

1.1 ENVIRONMENTAL DEFINITIONS

A. Definitions pertaining to sustainable development: As defined in ASTM E2114 and as specified herein.

B. Biobased Materials: As defined in the Farm Security and Rural Investment Act, for purposes of Federal procurement of biobased products, "biobased" means a "commercial or industrial product (other than food or feed) that is composed, in whole or in significant part, of biological products or renewable domestic agricultural materials (including plant, animal, and marine materials) or forestry materials." Biobased materials also include fuels, chemicals, building materials, or electric power or heat produced from biomass as defined by The Biomass Research and Development Act of 2000.

1. Biobased content: Amount of biobased carbon in the material or product as a percentage of weight (mass) of total organic carbon in the material or product.

C. Chain-of-Custody: Process whereby a product or material is maintained under physical possession or control during its entire life cycle.

D. DFE (Design for the Environment): A technique that includes elements of resource conservation and pollution prevention as applied in various product sectors. A technique that incorporates approaches which are part of product (or assembly) concept, need and design. Considerations involve material selection, material and energy efficiency, reuse, maintainability and design for disassembly and recyclability. Refer to International Organization for Standardization (ISO) Guide 64 for additional clarification.

E. Environmentally preferable products: Products and services that have a lesser or reduced effect on the environment in comparison to conventional products and services. Refer to EPA's Final Guidance on Environmentally Preferable Purchasing Program.

F. Non-Renewable Resource: A resource that exists in a fixed amount that cannot be replenished on a human time scale. Non-renewable resources have potential for renewal only by geological, physical, and chemical processes taking place over of millions of years. Examples include iron ore, coal, and oil.

G. Perpetual Resource: A resource that is virtually inexhaustible on a human time scale. Examples include solar energy, tidal energy, and wind energy.

H. Recycled Content Materials: Products that contain pre-consumer or post-consumer materials as all or part of their feedstock. Recycled content claim shall be consistent Federal Trade Commission (FTC) Guide for Use of Environmental Marketing Claims.

I. Renewable Resource: A resource that is grown, naturally replenished, or cleansed, at a rate which exceeds depletion of the usable supply of that resource. A renewable resource can be exhausted if improperly managed. However, a renewable resource can last indefinitely with proper stewardship. Examples include trees in forests, grasses in grasslands, and fertile soil.

1.2 QUALITY ASSURANCE

A. Applicability of Standards: Unless the Contract Documents include more stringent requirements, applicable construction industry standards have the same force and effect as if bound or copied directly into Contract Documents to the extent referenced. Such standards are made a part of Contract Documents by reference.

B. Publication Dates: Comply with standards in effect as of date of Contract Documents, unless otherwise indicated.

C. Conflicting Requirements: Where compliance with two or more standards is specified, and standards may establish different or conflicting requirements for minimum quantities or quality levels, comply with most stringent requirement. Refer uncertainties and requirements that are different, but apparently equal, to Contracting Officer (CO) for decision before proceeding.

1.3 INDUSTRY STANDARDS

A. Applicability of Standards: Unless Contract Documents include more stringent requirements, applicable construction industry standards have same force and effect as if bound or copied directly into Contract Documents to the extent referenced. Such standards are made a part of Contract Documents by reference.

B. Publication Dates: Comply with standards in effect as of date of Contract Documents unless otherwise indicated.

C. Copies of Standards: Each entity engaged in construction on Project should be familiar with industry standards applicable to its construction activity. Copies of applicable standards are not bound with Contract Documents.

1. Where copies of standards are needed to perform a required construction activity, obtain copies directly from publication source.

1.4 ABBREVIATIONS AND ACRONYMS

A. Industry Organizations: Where abbreviations and acronyms are used in Specifications or other Contract Documents, they shall mean the recognized name of the entities found in Section 01 42 00 Sources for Reference Publications, Unified Facilities Guide Specifications (UFGS) (accessible via Masters website > Downloads section > click on UFGS Master (WBDG Website).

Names, telephone numbers, and websites are subject to change and are believed to be accurate and up-to-date as of date of Contract Documents.

XX	EXAMPLE Association (The) www.EXAMPLE.org	

B. Code Agencies: Where abbreviations and acronyms are used in Specifications or other Contract Documents, they shall mean the recognized name of the entities in following list. Names, telephone numbers, and websites are subject to change and are believed to be accurate and up-to-date as of date of Contract Documents.

DIN	Deutsches Institut fur Normung e.V. www.din.de	49 30 2601-3003
IAPMO	International Association of Plumbing and Mechanical Officials www.iapmo.org	(909) 472-4100
ICC	International Code Council www.iccsafe.org	(888) 422-7233
ICC-ES	ICC Evaluation Service, Inc. icc-es.org	(800) 423-6587 (562) 699-0543

C. Federal Government Agencies: Where abbreviations and acronyms are used in Specifications or other Contract Documents, they shall mean the recognized name of the entities in following list. Names, and websites are subject to change and are believed to be accurate and up-to-date as of date of Contract Documents.

ABA & ABAAS United States Access Board	Architectural Barriers Act (ABA) Architectural Barriers Act Accessibility Standards (ABAAS) www.access-board.gov
CoE	Army Corps of Engineers www.usace.army.mil
CPSC	Consumer Product Safety Commission www.cpsc.gov
DOC	Department of Commerce www.commerce.gov
DOD	Department of Defense www.defense.gov
DOJ	Department of Justice www.justice.gov

DOE	Department of Energy www.energy.gov
EPA	Environmental Protection Agency www.epa.gov
FAA	Federal Aviation Administration www.faa.gov
FCC	Federal Communications Commission www.fcc.gov
FDA	Food and Drug Administration www.fda.gov
GSA	General Services Administration www.gsa.gov
HUD	Department of Housing and Urban Development www.hud.gov
LBL	Lawrence Berkeley National Laboratory www.lbl.gov
NCHRP	National Cooperative Highway Research Program (See TRB (Transportation Resource Board))
NIST	National Institute of Standards and Technology www.nist.gov
OSHA	Occupational Safety & Health Administration www.osha.gov
PHS	U.S. Department of Health and Human Services www.hhs.gov
RUS	Rural Utilities Service (See USDA (Department of Agriculture))
SD	State Department www.state.gov
TRB	Transportation Research Board www.nationalacademies.org/trb/transportation-research-board
USDA	Department of Agriculture www.usda.gov
USP	U.S. Pharmacopeia www.usp.org

USPS	Postal Service www.usps.com

D. Standards and Regulations: Where abbreviations and acronyms are used in Specifications or other Contract Documents, they shall mean the recognized name of the standards and regulations in following list. Names, telephone numbers, and websites are subject to change and are believed to be accurate and up-to-date as of date of Contract Documents.

ABAAS	Architectural Barriers Act Accessibility Standards www.access-board.gov
CFR	Code of Federal Regulations Available from Government Printing Office www.govinfo.gov/app/collection/cfr
DOD	Department of Defense Military Specifications and Standards Available from Department of Defense Single Stock Point www.dsp.dla.mil/Specs-Standards/
DSCC	Defense Supply Center Columbus (See FS (Federal Specification))
FED-STD	Federal Standard (See FS (Federal Specification))
FS	Federal Specification Available from Department of Defense Single Stock Point www.dsp.dla.mil/Specs-Standards/ Available from General Services Administration www.gsa.gov Available from National Institute of Building Sciences www.nibs.org
FTMS	Federal Test Method Standard (See FS (Federal Specification))
MIL	(See MILSPEC (Military Specification and Standards))
MIL-STD	(See MILSPEC (Military Specification and Standards))
MILSPEC	Military Specification and Standards Available from Department of Defense Single Stock Point www.dsp.dla.mil/Specs-Standards/
UFAS	Uniform Federal Accessibility Standards Available from Access Board www.access-board.gov/guidelines-and-standards/buildings-and-sites/about-the-aba-standards/ufas *(UFAS is **only** for housing projects per Fair Housing Act. See also the Fair Housing Act Design Manual, www.huduser.gov/portal/publications/destech/fairhousing)*

1.5 ENVIRONMENTAL REFERENCE STANDARDS

A. American Forest and Paper Association:

1. Sustainable Forestry Initiative

B. American Association of State Highway and Transportation Officials (AASHTO):
- M288 Geotextile Specification for Highway Applications
- **MP009-06 Standard Specification for Compost for Erosion/Sediment Control (Filter Berms and Filter Socks)**
- **MP010-03 Standard Specification for Compost for Erosion/Sediment Control (Compost Blankets)**

C. American Society for Testing and Materials International (ASTM):
- A478 Standard Specification for Chromium-Nickel Stainless Steel Weaving and Knitting Wire
- A580/A580M Standard Specification for Stainless Steel Wire
- A653/A653M Standard Specification for Steel Sheet, Zinc-Coated (Galvanized) or Zinc-Iron Alloy-Coated (Galvannealed) by the Hot-Dip Process
- B813 Standard Specification for Liquid and Paste Fluxes for Soldering of Copper and Copper Alloy Tube
- C1240 Standard Specification for Silica Fume Used in Cementitious Mixtures
- C128 Standard Test Method for Density, Relative Density (Specific Gravity), and Absorption of Fine Aggregate
- C131 Standard Test Method for Resistance to Degradation of Small-Size Coarse Aggregate by Abrasion and Impact in the Los Angeles Machine
- C1319 Standard Specification for Concrete Grid Paving Units
- C1338 Standard Test Method for Determining Fungi Resistance of Insulation Materials and Facings
- C136 Standard Test Method for Sieve Analysis of Fine and Coarse Aggregates
- C1371 Standard Test Method for Determination of Emittance of Materials Near Room Temperature Using Portable Emissometers
- C1386 Standard Specification for Precast Autoclaved AERATED Concrete (PAAC) Wall Construction Units
- C1483 Standard Specification for Exterior Solar Radiation Control Coatings on Buildings
- C1549 Standard Test Method for Determination of Solar Reflectance Near Ambient Temperature Using a Portable Solar Reflectometer
- C1601 Standard Test Method for Field Determination of Water Penetration of Masonry Wall Surfaces
- C289 Standard Test Method for Potential Alkali-Silica Reactivity of Aggregates (Chemical Method)
- C311 Test Methods for Sampling and Testing Fly Ash or Natural Pozzolans for Use as a Mineral Admixture in Portland-Cement Concrete
- C33 Standard Specification for Concrete Aggregates
- C593 Standard Specification for Fly Ash and Other Pozzolans for Use With Lime
- C595 Standard Specification for Blended Hydraulic Cements
- C618 Standard Specification for Coal Fly Ash and Raw or Calcined Natural Pozzolan for Use as a Mineral Admixture in Concrete
- C67 Standard Test Methods for Sampling and Testing Brick and Structural Clay Tile

- C739 Standard Specification for Cellulosic Fiber (Wood-Base) Loose-Fill Thermal Insulation
- C936 Standard Specification for Interlocking Concrete Paver Units
- C989 Standard Specification for Ground Granulated Blast-Furnace Slag for Use in Concrete and Mortars
- D1435 Standard Practice for Outdoor Weathering of Plastics
- D1557 Standard Test Methods for Laboratory Compaction Characteristics of Soil Using Modified Effort (56,000 foot pound force per cubic foot (ft-lbf/ft3) (2,700 kilonewton meter per cubic meter (kN-m/m3))
- D1972 Standard Practice for Generic Marking of Plastic Products
- D198 Standard Test Methods of Static Tests of Lumber in Structural Sizes
- D2103 Standard Specification for Polyethylene Film and Sheeting
- D217 Standard Test Methods for Cone Penetration of Lubricating Grease
- D2369 Standard Test Method for Volatile Content of Coatings
- D3273 Standard Test Method for Resistance to Growth of Mold on the Surface of Interior Coatings in an Environmental Chamber
- D3786 Standard Test Method for Hydraulic Bursting Strength of Textile Fabrics-Diaphragm Bursting Strength Tester Method
- D3792 Standard Test Method for Water Content of Coatings by Direct Injection Into a Gas Chromatograph
- D3864 Standard Guide for Continual On-Line Monitoring Systems for Water Analysis
- D3960 Standard Practice for Determining Volatile Organic Compound (VOC) Content of Paints and Related Coatings
- D4017 Standard Test Method for Water in Paints and Paint Materials by Karl Fischer Method
- D4263 Standard Test Method for Indicating Moisture in Concrete by the Plastic Sheet Method
- D4444 Standard Test Methods for Use and Calibration of Hand-Held Moisture Meters
- D4491 Standard Test Methods for Water Permeability of Geotextiles by Permittivity
- D4552 Standard Practice for Classifying Hot-Mix Recycling Agents
- D4632 Standard Test Method for Grab Breaking Load and Elongation of Geotextiles
- D4716 Test Method for Determining the (In-plane) Flow Rate per Unit Width and Hydraulic Transmissivity of a Geosynthetic Using a Constant Head
- D4833 Standard Test Method for Index Puncture Resistance of Geotextiles, Geomembranes, and Related Product
- D4840 Standard Guide for Sampling Chain-of-Custody Procedures
- D4887 Standard Test Method for Preparation of Viscosity Blends for Hot Recycled Bituminous Materials
- D5106 Standard Specification for Steel Slag Aggregates for Bituminous Paving Mixtures
- D5116 Standard Guide for Small-Scale Environmental Chamber Determinations of Organic Emissions from Indoor Materials/Products
- D5199 Standard Test Method for Measuring the Nominal Thickness of Geosynthetics
- D5261 Standard Test Method for Measuring Mass per Unit Area of Geotextiles
- D5268 Standard Specification for Topsoil Used for Landscaping Purposes
- D5359 Standard Specification for Glass Cullet Recovered from Waste for Use in Manufacture of Glass Fiber
- D5505 Standard Practice for Classifying Emulsified Recycling Agents
- D5509 Standard Practice for Exposing Plastics to a Simulated Compost Environment

- D5512 Standard Practice for Exposing Plastics to a Simulated Compost Environment Using an Externally Heated Reactor
- D5539 Standard Specification for Seed Starter Mix
- D5957 Standard Guide for Flood Testing Horizontal Waterproofing Installations
- D5603 Standard Classification for Rubber Compounding Materials—Recycled Vulcanizate Particulate Rubber
- D5663 Standard Guide for Validating Recycled Content in Packaging Paper and Paperboard
- D5759 Standard Guide for Characterization of Coal Fly Ash and Clean Coal Combustion Fly Ash for Potential Uses
- D5792 Standard Practice for Generation of Environmental Data Related to Waste Management Activities: Development of Data Quality Objectives
- D5834 Standard Guide for Source Reduction Reuse, Recycling, and Disposal of Solid and Corrugated Fiberboard (Cardboard)
- D5851 Standard Guide for Planning and Implementing a Water Monitoring Program
- D5852 Standard Test Method for Erodibility Determination of Soil in the Field or in the Laboratory by the Jet Index Method
- D6002 Standard Guide for Assessing the Compostability of Environmentally Degradable Plastics
- D6006 Standard Guide for Assessing Biodegradability of Hydraulic Fluid
- D6007 Standard Test Method for Determining Formaldehyde Concentration in Air from Wood Products Using a Small Scale Chamber
- D6046 Standard Classification of Hydraulic Fluids for Environmental Impact
- D6081 Standard Practice for Aquatic Toxicity Testing of Lubricants: Sample Preparation and Results Interpretation
- D6108 Standard Test Method for Compressive Properties of Plastic Lumber and Shapes
- D6109 Standard Test Methods for Flexural Properties of Unreinforced and Reinforced Plastic Lumber
- D6112 Standard Test Methods for Compressive and Flexural creep and Creep-Rupture of Plastic Lumber and Shapes
- D6117 Standard Test Methods for Mechanical Fasteners In Plastic Lumber and Shapes
- D6155 Standard Specification for Nontraditional Coarse Aggregates for Bituminous Paving Mixtures
- D6245 Standard Guide for Using Indoor Carbon Dioxide Concentrations to Evaluate Indoor Air Quality and Ventilation
- D6261 Standard Specification for Extruded and Compression Molded Basic Shapes Made from Thermoplastic Polyester (TPES)
- D6262 Standard Specification for Extruded, Compression Molded, and Injection Molded Basic Shapes of Poly(aryl ether ketone) (PAEK)
- D6270 Standard Practice for Use of Scrap Tires in Civil Engineering Applications
- D6329 Standard Guide for Developing Methodology for Evaluating the Ability of Indoor Materials to Support Microbial Growth Using Static Environmental Chambers
- D6330 Standard Practice for Determination of Volatile Organic Compounds (Excluding Formaldehyde) Emissions from Wood-Based Panels Using Small Environmental Chambers Under Defined Test Conditions
- D6345 Standard Guide for Selection of Methods for Active, Integrative Sampling of Volatile Organic Compounds in Air
- D6400 Standard Specification for Compostable Plastics

- D6435 Standard Test Method for Shear Properties of Plastic Lumber and Plastic Lumber Shapes
- D6629 Standard Guide for Selection of Methods for Estimating Soil Loss by Erosion
- D6662 Standard Specification for Polyolefin-Based Plastic Lumber Decking Boards
- D6712 Standard Specification for Ultra-High-Molecular-Weight Polyethylene (UHMW-PE) Solid Plastic Shapes
- D6886 Standard Test Method for Speciation of the Volatile Organic Compounds (VOCs) in Low VOC Content Waterborne Air-Dry Coatings by Gas Chromatography
- D692 Standard Specification for Coarse Aggregate for Bituminous Paving Mixtures
- D696 Standard Test Method for Coefficient of Linear Thermal Expansion of Plastics Between -30°C and 30°C With a Vitreous Silica Dilatometer
- D698 Standard Test Methods for Laboratory Compaction Characteristics of Soil Using Standard Effort (12,400 ft-lbf/ft3 (600 kN-m/m3))
- D7186 Standard Practice for Quality Assurance Observation of Roof Construction and Repair
- E1021 Standard Test Methods for Measuring Spectral Response of Photovoltaic Cells
- E1038 Standard Test Method for Determining Resistance of Photovoltaic Modules to Hail by Impact with Propelled Ice Balls
- E1039 Standard Test Method for Calibration of Silicon Non-Concentrator Photovoltaic Primary Reference Cells Under Global Irradiation
- E1040 Standard Specification for Physical Characteristics of Nonconcentrator Terrestrial Photovoltaic Reference Cells
- E1105 Standard Test Method for Field Determination of Water Penetration of Installed Exterior Windows, Skylights, Doors, and Curtain Walls by Uniform or Cyclic Static Air Pressure Difference
- E1171 Standard Test Method for Photovoltaic Modules in Cyclic Temperature and Humidity Environments
- E1333 Standard Test Method for Determining Formaldehyde Concentrations in Air and Emission Rates from Wood Products Under Defined Test Conditions Using a Large Chamber
- E1362 Standard Test Method for Calibration of Non-Concentrator Photovoltaic Secondary Reference Cells
- E1433 Standard Guide for Selection of Standards on Environmental Acoustics
- E1462 Standard Test Methods for Insulation Integrity and Ground Path Continuity of Photovoltaic Modules
- E1596 Standard Test Methods for Solar Radiation Weathering of Photovoltaic Modules
- E1597 Standard Test Method for Saltwater Pressure Immersion and Temperature Testing of Photovoltaic Modules for Marine Environments
- E1609 Standard Guide for Development and Implementation of a Pollution Prevention Program
- E1686 Standard Guide for Selection of Environmental Noise Measurements and Criteria
- E1690 Standard Test Method for Determination of Ethanol Extractives in Biomass
- E1721 Standard Test Method for Determination of Acid-Insoluble Residue in Biomass
- E1755 Standard Test Method for Ash in Biomass
- E1758 Standard Test Method for Determination of Carbohydrates in Biomass by High Performance Liquid Chromatography
- E1780 Standard Guide for Measuring Outdoor Sound Received from a Nearby Fixed Source
- E1799 Standard Practice for Visual Inspections of Photovoltaic Modules

- E1802 Standard Test Methods for Wet Insulation Integrity Testing of Photovoltaic Modules
- E1821 Standard Test Method for Determination of Carbohydrates in Biomass by Gas Chromatography
- E1827 Standard Test Methods for Determining Airtightness of Buildings Using an Orifice Blower Door
- E1830 Standard Test Methods for Determining Mechanical Integrity of Photovoltaic Modules
- E1861 Standard Guide for Use of Coal Combustion By-Products in Structural Fills
- E1918 Standard Test Method for Measuring Solar Reflectance of Horizontal and Low-Sloped Surfaces in the Field
- E1971 Standard Guide for Stewardship for the Cleaning of Commercial and Institutional Buildings
- E1980 Standard Practice for Calculating Solar Reflectance Index of Horizontal and Low-Sloped Opaque Surfaces
- E1991 Standard Guide for Environmental Life Cycle Assessment of Building Materials/Products
- E2047 Standard Test Method for Wet Insulation Integrity Testing of Photovoltaic Arrays
- E2114 Standard Terminology for Sustainability Relative to the Performance of Buildings
- E2128 Standard Guide for Evaluating Water Leakage of Building Walls
- E2129 Standard Practice for Data Collection for Sustainability Assessment of Building Products
- E2397 Standard Practice for Determination of Dead Loads and Live Loads associated with Green Roof Systems
- E2398 Standard Test Method for Water Capture and Media Retention of Geocomposite Drain Layers for Green Roof Systems
- E2399 Standard Test Method for Maximum Media Density for Dead Load Analysis of Green Roof Systems
- E2400 Standard Guide for Selection, Installation, and Maintenance of Plants for Green Roof Systems
- E241 Standard Guide for Limiting Water-Induced Damage to Buildings
- E2432 Standard Guide for General Principles of Sustainability Relative to Buildings
- E408 Standard Test Methods for Total Normal Emittance of Surfaces Using Inspection-Meter Techniques
- E413 Standard Classification for Rating Sound Insulation
- E477 Standard Test Method for Measuring Acoustical and Airflow Performance of Duct Liner Materials and Prefabricated Silencers
- E648 Standard Test Method for Critical Radiant Flux of Floor-Covering Systems Using a Radiant Heat Energy Source
- E683 Standard Practice for Installation and Service of Solar Space Heating Systems for One- and Two-Family Dwellings
- E779 Standard Test Method for Determining Air Leakage Rate by Fan Pressurization
- E781 Standard Practice for Evaluating Absorptive Solar Receiver Materials When Exposed to Conditions Simulating Stagnation in Solar Collectors With Cover Plates
- E782 Standard Practice for Exposure of Cover Materials for Solar Collectors to Natural Weathering Under Conditions Simulating Operational Mode
- E823 Standard Practice for Nonoperational Exposure and Inspection of a Solar Collector
- E881 Standard Practice for Exposure of Solar Collector Cover Materials to Natural Weathering Under Conditions Simulating Stagnation Mode

- E90 Standard Test Method for Laboratory Measurement of Airborne Sound Transmission Loss of Building Partitions and Elements
- E903 Standard Test Method for Solar Absorptance, Reflectance, and Transmittance of Materials Using Integrating Spheres
- E948 Standard Test Method for Electrical Performance of Photovoltaic Cells Using Reference Cells Under Simulated Sunlight
- F1869 Standard Test Method for Measuring Moisture Vapor Emission Rate of Concrete Subfloor Using Anhydrous Calcium Chloride
- F2034 Standard Specification for Sheet Linoleum Floor Covering
- F2170 Standard Test Method for Determining Relative Humidity in Concrete Floor Slabs Using in situ Probes

D. Center for Resource Solutions
- Green-e program

E. Environmental Protection Agency (EPA):
- **Comprehensive Procurement Guidelines**
- **ENERGY STAR**
- **Environmentally Preferable Purchasing Program Final Guidance**
- **GreenScapes program**
- **Heat Island Initiative**
- **National Environmental Performance Track**
- **Product Stewardship Program**
- **Significant New Alternatives Policy (SNAP) Program**

F. Federal Trade Commission:
- **Guide for the Use of Environmental Marketing Claims**

G. Forest Stewardship Council:
- **Chain-Of-Custody**
- **Forest Management**

H. Green Building Initiative (GBI):
- **Green Globes - US**

I. Green Seal:
- **GC-03 Anti-Corrosive Paints**
- **GC-12 Occupancy Sensors**
- **GS-05 Compact Fluorescent Lamps**
- **GS-11 Paints**
- **GS-32 Photovoltaic Modules**
- **GS-36 Commercial Adhesives**
- **GS-37 Industrial & Institutional Cleaners**

J. International Iron and Steel Institute:
- **CO2 Breakthrough Program**

K. International Organization of Standardization:
- **Guide 64; Guide for Inclusion of Environmental Aspects in Product Standards**

- **9660 Information processing -- Volume and file structure of CD-ROM for information interchange**
- **14001 Environmental management systems – Specification with guidance for use**
- **14004 Environmental Management Systems – General Guidelines on Principles, Systems and Supporting Techniques**
- **14020 Environmental labels and declarations – General principles**
- **14024 Environmental labels and declarations – Type I environmental labelling - Principles and procedures**
- **14040 Environmental management – Life cycle assessment – Principles and framework**

L. National Institute of Building Sciences:
- **Whole Building Design Guide**

M. National Institute of Standards and Technology:
- **BEES (Building for Environmental and Economic Sustainability) Lifecycle Decision Support Tool**

N. Southcoast Air Quality Management District:
- **1168 Adhesive And Sealant Applications**

O. US Composting Council:
- Seal of Testing Assurance Program

P. US Department of Agriculture:
- **Biobased Products – Definitions and Descriptions**

Q. US Green Building Council:
- **LEED™ 2009 Green Building Rating System**
- **LEED™ v4 (version 4) Green Building Rating System**

PART 2 - PRODUCTS (Not Used)

PART 3 - EXECUTION (Not Used)

END OF SECTION 01 42 00

GOGA-244458 / FOPO-186401

SECTION 01 50 00 - TEMPORARY FACILITIES AND CONTROLS

PART 1 - GENERAL

1.1 SUMMARY

A. Section includes requirements for temporary utilities, support facilities, and security and protection facilities.

B. Related Requirements:
1. Section 31 10 00 “Site Clearing” for tree protection fencing requirements.

1.2 DEFINITIONS

A. Permanent Enclosure: As determined by Contracting Officer (CO), permanent or temporary roofing is complete, insulated, and weathertight; exterior walls are insulated and weathertight; and openings are closed with permanent construction or substantial temporary closures.

1.3 USE CHARGES

A. General: Cost or use charges for temporary facilities shall be included in Contract Sum as required.

B. Water Service: Potable water from existing water system is available for use with metering and with payment of use charges. Provide connections and extensions of services as required for construction operations with any additional permit costs.

C. Electric Power Service: Electric power from existing system is available for use with metering and with payment of use charges. Provide connections and extensions of services as required for construction operations with any additional permit costs.

1.4 QUALITY ASSURANCE

A. Electric Service: Comply with National Electrical Contractors Association (NECA), National Electrical Manufacturers Association (NEMA), and Underwriter Laboratories (UL) standards and regulations for temporary electric service. Install service to comply with National Fire Protection Association (NFPA) 70.

B. Environmental Protection: Provide environmental protection as required by agency(ies) with jurisdiction and as indicated in Contract Documents. Coordinate with requirements of the following:

1. Regulatory Requirements
2. Environmental Management
3. Construction Waste Management

C. Accessible Temporary Egress: Comply with applicable provisions in the United States (U.S.) Architectural & Transportation Barriers Compliance Board's Architectural Barriers Act Accessibility Standard (ABAAS) Accessibility Guidelines.

1.5 PROJECT CONDITIONS

A. Temporary Use of Permanent Facilities: Installer of each permanent service shall assume responsibility for operation, maintenance, and protection of each permanent service during its use as a construction facility before NPS acceptance, regardless of previously assigned responsibilities.

PART 2 - PRODUCTS

2.1 MATERIALS

A. Temporary materials may be new or used, but must be adequate in capacity for required usage, must not create unsafe conditions, and must not violate requirements of applicable codes and standards.

B. Pavement: Comply with Division 32 Section 32 12 16 "Asphalt Paving."

C. Chain-Link Fencing: Minimum 2 inch (50 millimeters), 0.148 inch (3.76 millimeters) thick, galvanized steel, chain-link fabric fencing; minimum 6 feet (1.8 millimeter) high with galvanized steel pipe posts; minimum 2-3/8 inch (60 millimeters) OD (outside diameter) line posts and 2-7/8 inch (73 millimeters) OD corner and pull posts, with 1-5/8 inch (42 millimeters) OD top rails.

D. Portable Chain-Link Fencing: Minimum 2 inch (50 millimeters), 9-gage, galvanized steel, chain-link fabric fencing; minimum 6 feet (1.8 millimeters) high with galvanized steel pipe posts; minimum 2-3/8 inch (60 millimeters) OD line posts and 2-7/8 inch (73 millimeters) OD corner and pull posts, with 1-5/8 inch (42 millimeters) OD top and bottom rails. Provide concrete bases for supporting posts.

E. Safety Barrier Fence: Orange plastic fence, minimum height, 4 feet.

F. Barrier Tape: Yellow tape Imprinted with "CAUTION: CONSTRUCTION AREA".

G. Silt fence shall consist of 2-foot tall silt fence fabric stapled to 4-foot wood stakes driven into the ground to a depth of 1.5-feet. Wood stakes shall be space at 5- to 6-foot intervals. Depending on use, the base of the silt fence may be connected to the ground through standard keying or stapled to the ground using 12-inch long erosion control blanket staples on 3- to 4-foot centers.
   1. Silt fence shall be both installed and removed in a manner to avoid generating fine material that will easily erode following construction activities.
   2. Silt fence may need to be supplemented by other materials such as straw bales or wattles in specific zones of the site to prevent the release of fine sediment into open water either

during construction activities or in the event that rain is predicted or occurs during the period of implementation.

H. Turbidity curtain shall be implemented when work will be conducted at the edge of standing water, particularly water bodies constituting sensitive habitat, as determined by NPS. A turbidity curtain consists of sturdy materials manufactured by Layfield or approved equivalent capable of obstructing the flow of turbid water into non-work zones.

I. Security Fence: Chain link, with fabric dense enough to reduce dust movement, minimum height, 6 feet.

J. Lumber and Plywood: Comply with requirements in Division 06 Section "Rough Carpentry."

2.2 TEMPORARY FACILITIES

A. Field Offices, General: Prefabricated or mobile units with serviceable finishes, temperature controls, and foundations adequate for normal loading.

B. Contracting Officers Field Office: Field office shall be a separate structure from Contractor's office.

1. Prefabricated, job built, or a mobile unit; excellent condition, structurally sound, non-flammable exterior construction, weather tight, minimum **160** square feet.
2. Operable windows and security screens, adjustable ventilation.
3. Air conditioner and heater.
4. Interior partition with lockable door to divide office
5. Paneling or freshly painted walls, acoustical tile or painted ceilings, and resilient flooring.
6. ~~Two~~ Exterior door with dead bolt keyed from outside,
7. Minimum 20-square-foot landing and steps at each exterior door.

C. Storage and Fabrication Sheds: Temporary weather tight sheds or other covered facilities for storage of materials subject to weather damage. Number and size of structures shall be subject to Contracting Officer's approval.

D. Toilets: Sufficiently lighted and ventilated toilet facilities in weatherproof, sight proof, handicap accessible, sturdy enclosures with privacy locks.

1. Provide separate toilet facilities for men and women.

2.3 EQUIPMENT

A. Fire Extinguishers: Portable, UL rated; with class and extinguishing agent as required by locations and classes of fire exposures.

B. Heating, Ventilation, and Air Conditioning (HVAC) Equipment: Unless Contracting Officer authorizes use of permanent HVAC system, provide vented, self-contained, liquid-propane-gas or fuel-oil heaters with individual space thermostatic control.

1. Use of gasoline-burning space heaters, open-flame heaters, or salamander-type heating units is prohibited.
2. Heating Units: Listed and labeled for type of fuel being consumed, by a testing agency acceptable to agency(ies) with jurisdiction, and marked for intended use.

C. Direct Digital Control (DDC) Internet Connection: Furnish, install and maintain a high-speed connection (Digital Subscriber Line (DSL) or similar) between the project's DDC system and the internet through a Contractor furnished internet service provider. Contractor is responsible for maintenance of this connection and costs associated with internet service provider through warranty period of this contract. Upon completion of warranty period, service shall be transferable to the Government at which time future costs for connection will no longer be the responsibility of Contractor.

D. Contracting Officers Field Office

1. Outlets: Minimum of two, quad outlets with surge protection.
2. Refrigerator: Under counter, 3.2-cubic-foot volume with 0.8-cubic-foot freezer with dedicated power receptacle.
3. Fire Extinguisher: UL listed and FM (Fire Pump Motors) approved, minimum rating of 2-A:10-B:C, dry chemical.
4. First-Aid Kit: General office/light industrial kit which includes antiseptic wipes, bandages, disposable gloves, tape, instant cold pack, dressing pads, eye pads, scissors, and Tylenol tablets. Provide small size, such as manufactured by Johnson & Johnson, New Brunswick, New Jersey, or approved equal.
5. One desk with five drawers and one chair with casters; drafting table (minimum 40 inches wide by 5 feet long) and one stool; drawing rack; one 2-drawer and one 4-drawer legal size locking filing cabinets with keys; 8 feet of 12-inch-deep shelving; coat rack; one additional guest chair; one desk lamp; one drafting table lamp; and a maximum/minimum thermometer.
6. Manufactured computer work station, capable of containing CPU (central processing unit), monitor, keyboard, printer; work station chair.
7. Additional tables necessary for copier.
8. One 5-gallon trash can with lid.
9. Ceiling mounted general lighting fixtures.

PART 3 - EXECUTION

3.1 INSTALLATION, GENERAL

A. Locate facilities where they will serve Project adequately and result in minimum interference with performance of the Work. Relocate and modify facilities as required by progress of the Work.

1. Locate facilities to limit site disturbance and as directed by the Contracting Officer.

B. Provide each facility ready for use when needed to avoid delay. Do not remove until facilities are no longer needed or are replaced by authorized use of completed permanent facilities.

3.2 TEMPORARY UTILITY INSTALLATION

A. General: Install temporary service or connect to existing service.

1. Arrange with utility company, NPS, and existing users for time when service can be interrupted, if necessary, to make connections for temporary services. Acquire necessary permits.

B. Storm Sewers and Drainage: Provide temporary utilities to remove effluent lawfully.

1. Connect temporary sewers to municipal system as directed by the agency(ies) with jurisdiction.

C. Non-potable water for construction is available from within the Park. Water can be obtained from certain Presidio hydrants near the project site, for approximately $17/1,000 gallons plus a $300 connection fee. Contact Dan Patrick, Water Treatment Plant Supervisor, Presidio Trust, 1750 Lincoln Boulevard, San Francisco, CA 94129, (415) 561-4135.

D. Potable water is available on site. Make connections to existing facilities as needed. Facilities must be cleaned and maintained in a condition acceptable to NPS. At Substantial Completion, restore these facilities to condition existing before initial use.

E. Sanitary Facilities: Provide temporary toilets, and wash facilities for use by construction personnel.

1. Place in approved locations secluded from public observation and convenient to work stations. Relocate as work progress requires.
2. Maintain and clean toilet facilities at least weekly.
3. Sanitary facilities shall be placed at least 50 feet from water bodies and water drainages.
4. Completely remove sanitary facilities on completion of work.

F. Heating: Provide temporary heating and cooling required by construction activities for curing or drying of completed installations or for protecting installed construction from adverse effects of low temperatures or high humidity. Select equipment that will not have a harmful effect on completed installations or elements being installed.

1. Use of permanent heating system will not be allowed without written authorization from Contracting Officer. When the permanent heating system is approved for use as temporary heating, pay costs until final acceptance. Permanent heating system shall be sufficiently complete, including controls, to permit safe operation
2. Provide and maintain adequate approved facilities, as required for safety and construction requirements, during the work. Provide ample clearance around stoves, heaters, chimney and vent connections to prevent ignition of combustible material
3. Install and maintain temporary filters when air handing equipment is used for temporary heating. Install new filters before final acceptance in addition to any extra sets of filters required. Clean coils as determined by Contracting Officer.
4. Warranties for equipment used for temporary heating shall start on date of Final Acceptance.

G. Ventilation and Humidity Control: Provide temporary ventilation required by construction activities for curing or drying of completed installations or for protecting installed construction

from adverse effects of high humidity. Select equipment that will not have a harmful effect on completed installations or elements being installed. Coordinate ventilation requirements to produce ambient condition required and minimize energy consumption.

H. Electric Power Service: Use of existing electric power service will be permitted, as long as equipment is maintained in a condition acceptable to NPS.

1. When temporary connections are removed, restore existing utility services to original condition.

I. Lighting: Provide temporary lighting with local switching that provides adequate illumination for construction operations, observations, inspections, and traffic conditions.

1. Install and operate temporary lighting that fulfills security and protection requirements without operating entire system.

J. Telephone Service: No telephone service is available on site for Contractor's use. Make arrangements with Telephone Company and pay costs.

1. Make arrangements with the telephone company to install one line for Contracting Officer’s use and pay installation costs.

3.3 SUPPORT FACILITIES INSTALLATION

A. General: Comply with the following:

1. Provide incombustible construction for offices, shops, and sheds located within construction area or within 50 feet of building lines. Comply with NFPA 241.
2. Maintain support facilities until near Substantial Completion. Remove structures, equipment, and furnishings, and terminate services after punch list is 100 percent completed or when directed by Contracting Officer. Personnel remaining after Substantial Completion will be permitted to use permanent facilities, under conditions acceptable to Contracting Officer.

B. Contracting Officers Field Office:

1. Provide Heat, lights, power, and air conditioning.
2. Provide office, furnishings, and utility connections no later than 7 days after date of Notice to Proceed. Exact location will be determined by Contracting Officer.
3. Maintain equipment, furnishings, and structures. Provide equipment replacement elements as needed. Provide weekly cleaning services and trash disposal. Maintain and service water and sewer holding tanks as required.

C. Temporary Roads and Paved Areas: Construct and maintain temporary roads and paved areas adequate for construction operations. Locate temporary roads and paved areas in same location as permanent roads and paved areas. Extend temporary roads and paved areas, within construction limits indicated, as necessary for construction operations.

1. Coordinate elevations of temporary roads and paved areas with permanent roads and paved areas.

2. Prepare subgrade and install subbase and base for temporary roads and paved areas according to Division 31 Section "Earth Moving."
3. Delay installation of final course of permanent hot-mix asphalt pavement until immediately before Substantial Completion. Repair hot-mix asphalt base-course pavement before installation of final course according to Division 32 Section "Asphalt Paving."

D. Traffic Controls: Erect and maintain barricades, lights, danger signals, and warning signs in accordance with Manual on Uniform Traffic Control Devices (MUTCD), Part IV, latest edition.

1. Protect existing site improvements to remain including curbs, pavement, and utilities.
2. Maintain access for fire-fighting equipment and access to fire hydrants.
3. Illuminate barricades and obstructions at night; keep safety lights burning from sunset to sunrise.
4. Adequately barricade and post open cuts in or adjacent to thoroughfares.
5. Protect pedestrian traffic by guardrails or fences.
6. When pedestrian traffic is detoured onto a roadway, provide temporary walkways with protection as required at ends and overhead. For walkways, use lumber running parallel to direction of traffic movement and provide ramps at changes of elevation.
7. Cover pipes, hoses, and power lines crossing sidewalks and walkways with troughs using beveled edge boards.
8. Install Barrier Tape where directed by Contracting Officer. Keep a minimum of two rolls on site.

E. Parking: Provide temporary parking areas for construction personnel including one space for the NPS construction management representative.

F. Dewatering Facilities and Drains: Comply with requirements of the agency(ies) with jurisdiction. Maintain Project site, excavations, and construction free of water.

1. Dispose of rainwater in lawful manner that will not result in flooding Project or adjoining properties nor endanger permanent Work or temporary facilities.
2. Remove snow and ice as required to minimize accumulations.

G. Project Identification and Temporary Signs: Provide Project identification and other signs **as shown**. Fence, barricade, or otherwise block off the immediate work area to prevent unauthorized entry.

1. Provide temporary, directional signs for construction personnel and visitors.
2. Maintain and touchup signs so they are legible at all times.
3. Erect and maintain sufficient detour signs at road closures and along detour routes.

H. Waste Disposal Facilities: Provide waste-collection containers in sizes adequate to handle waste from construction operations. Comply with requirements of agency(ies) with jurisdiction.

3.4 SECURITY AND PROTECTION FACILITIES INSTALLATION

A. Environmental Protection: Provide protection, operate temporary facilities, and conduct construction in ways and by methods that comply with environmental regulations and minimize possible air, waterway, and subsoil contamination or pollution or other undesirable effects.

B. Cleaning of Equipment: Contractor shall ensure prior to moving on to Project Area, equipment, is free of soil, seeds, vegetative matter, or other debris that could contain or hold seeds. Ensure equipment has been pressure washed and is free of exotic species. Equipment shall be considered free of soil, seeds, and other debris when visual inspection does not disclose such material. Disassembly of equipment components or specialized inspection tools are not required.

C. Temporary Erosion and Sedimentation Control: Refer to Section 01 57 23 "Under-an-Acre Pollution Prevention".

D. Tree and Plant Protection: Refer to Section 01 11 00 "Summary of Work".

E. Pest Control: Follow NPS requirements to minimize attraction and harboring of rodents, roaches, and other pests and perform extermination and control procedures at regular intervals so Project will be free of pests and residues at Substantial Completion. Perform control operations lawfully, using environmentally safe materials.

F. Site Enclosure Fence: Before construction operations begin, furnish and install chain link fencing to prevent people and animals from easily entering site except by entrance gates.

1. Extent of Fence: As required to enclose entire Project site or portion determined sufficient to accommodate construction operations.
2. Locate vehicular gates to avoid interference with traffic on public thoroughfares.
3. Locate pedestrian entrance gates as required to provide controlled personnel entry.
4. Maintain security by limiting number of keys and restricting distribution to authorized personnel. Provide Contracting Officer with one set of keys.

G. Security Enclosure and Lockup: Install substantial temporary enclosure around partially completed areas of construction. Provide lockable entrances to prevent unauthorized entrance, vandalism, theft, and similar violations of security.

H. Barricades, Warning Signs, and Lights: Comply with requirements of Manual on Uniform Traffic Control Devices (MUTCD), part IV, 2003 edition for erecting structurally adequate barricades, including warning signs and lighting.

I. Temporary Fire Protection: Install and maintain temporary fire-protection facilities of types needed to protect against reasonably predictable and controllable fire losses. Comply with NFPA 241.

1. Responsible Person: Capable and qualified person shall be placed in charge of fire protection. Responsibilities shall include locating and maintaining fire protective equipment and establishing and maintaining safe torch cutting and welding procedures.
2. Tobacco Use, Smoking, and Vaping: Smoking within buildings or temporary storage sheds is prohibited.
3. Supervise welding operations, combustion-type temporary heating units, and similar sources of fire ignition according to requirements of **NPS.**
   a. A Hot Work permit is required for all torch and welding operations. Contact Park Fire Inspector Matt Harrison (415) 629-8154 for hot permits.
4. Develop and supervise overall fire-prevention and -protection program for personnel at Project Site. Review needs with local fire department and establish procedures to be followed. Instruct personnel in methods and procedures. Post warnings and information.

5. Provide temporary standpipes and hoses for fire protection. Hang hoses with warning sign stating hoses are for fire-protection purposes only and are not to be removed. Match hose size with outlet size and equip with suitable nozzles.
6. Hazard Control: Take all necessary precautions to prevent fire during construction. Do not store flammable or combustible liquids in existing buildings. Provide adequate ventilation during use of volatile or noxious substances. Ensure cleanup procedures and storage requirements are followed at close of every work session.
7. Spark Arresters: Equip gasoline or diesel powered equipment used during periods of potential fire hazards or in potential forest and grass fire locations with spark arresters approved by United States Department of Agriculture (USDA) Forest Service.

    a. Written determinations of periods and areas of potential fire hazard will be issued by Contracting Officer.

8. Buildings: Furnish a minimum of one extinguisher for each 1,500 square feet of area or major fraction thereof.

    a. Travel distance from any work station to nearest extinguisher shall not exceed 75 feet.

9. Vehicles and Equipment: Provide one extinguisher on each vehicle or piece of equipment.
10. Service and Refueling Areas: Locate areas a minimum of **50** feet from buildings. Shut down equipment before refueling.

3.5 OPERATION, TERMINATION, AND REMOVAL

A. Supervision: Enforce strict discipline in use of temporary facilities. Minimize waste and abuse, limit availability of temporary facilities to essential and intended uses.

B. Maintenance: Maintain facilities in good operating condition until removal.

    1. Maintain operation of temporary enclosures, heating, cooling, humidity control, ventilation, and similar facilities on 24-hour basis where required to achieve indicated results and avoid possibility of damage.

C. Temporary Facility Changeover: Do not change over from using temporary security and protection facilities to permanent facilities until Substantial Completion.

D. Termination and Removal: Remove each temporary facility when need for its service has ended, when it has been replaced by authorized use of a permanent facility, or no later than Substantial Completion. Complete or, if necessary, restore permanent construction that may have been delayed because of interference with temporary facility. Repair damaged Work, clean exposed surfaces, and replace construction that cannot be satisfactorily repaired.

    1. Materials and facilities that constitute temporary facilities are property of Contractor. NPS reserves right to take possession of Project identification signs.
    2. At Substantial Completion, clean and renovate permanent facilities used during construction period.

END OF SECTION 01 50 00

SECTION 01 50 02 - TRUCKING

PART 1 - - GENERAL

1.1 SUMMARY

A. This section describes requirements related to hauling of materials to and from the project.

1.2 SUBMITTALS

A. A detailed construction traffic management plan will be developed. See Specification Section 01 45 00 Environmental Protection and Traffic Control.

PART 2 - PRODUCTS (Not used)

PART 3 - EXECUTION

3.1 GENERAL

A. All trucks hauling soil, sand, and other loose materials will be covered.

B. Equipment and trucks used for construction will utilize noise control techniques, including original mufflers, intake silencers, ducts, engine enclosures and acoustically attenuating shields or shrouds

C. Use vehicles with tight, clean, and smooth metal beds for hauling asphalt concrete mixes. Thinly coat the beds with an approved material to prevent the mix from adhering to the beds. Do not use petroleum derivatives or other coating material that contaminates or alters the characteristics of the mix. Drain the bed before loading.

D. Equip each truck with a canvas cover or other suitable material of sufficient size to protect the mix from the weather. When necessary to maintain temperature, use insulated truck beds and securely fastened covers. Provide access ports or holes for checking temperature of asphalt mix in the truck.

E. Roadway and parking lot damage, such as potholes, minor fractures, will be repaired, and the overall roadbed will be maintained within the construction areas, to the extent that such damage is caused by project traffic that occurs during the period of hauling operations. Following construction within a particular roadway or parking lot segment, roadway and/or parking lot restoration will take place within six weeks of completion of construction. County Design Guidelines will be adhered to when reconstructing County roads. Agreements on restoration

standards will be formalized with the relevant jurisdiction Marin County Public Works, and/or Caltrans or other agency(ies) with jurisdiction, prior to the issuance of the Notice to Proceed.

F. Hauling shall not begin until the Traffic Control Plan has been reviewed and accepted by the Contracting Officer. The Contractor shall allow ten (10) working days for this review process. If revisions are required as determined by the review process, the Contractor shall revise and resubmit the Traffic Control Plan within five (5) calendar days of receipt of the revision comments and shall allow five (5) working days for review of the revisions. Failure to submit an acceptable Plan shall not in any way delay the start of the contract working days.

G. Noise the construction contractor will employ noise-reducing construction practices, including, but not limited to: Selecting haul routes that affect the fewest number of people

H. Haul full loads, and minimize unnecessary vehicle trips.

I. Invasive Plants
   1. All vehicles, tools and equipment shall be cleaned of dirt and vegetative material prior to entering the work site each day and at the end of each work day.
   2. Any trucks or equipment driving from one work zone to another that requires passing through any areas with weeds shall take measures to prevent the spread of weed seeds via truck tires or tracks.

J. Noise
   1. Prohibiting vehicles and other gas- or diesel-powered equipment from unnecessary warming up, idling, and engine revving
   2. Selecting haul routes that affect the fewest number of people
   3. See Section 01 57 19.12 Noise and Exterior Lighting.

K. Staging and Queuing: of trucks on Park property and outside of the project work limits must comply with timing requirements of Sections 01 11 00 Summary of Work, and 01 57 19.12 Noise and Exterior Lighting.

L. Transportation Coordinator: Designate Transportation Coordinator to serve as the single point of contact for coordination of hauling and trucking operations.
   1. See Section 01 57 19.12 Noise and Exterior Lighting.

END OF SECTION 01 50 02

GOGA-244458 / FOPO-186401

SECTION 01 57 19.12 – NOISE AND ACCOUSTICS MANAGEMENT

PART 1 - GENERAL

1.1 SUMMARY

A. Section includes:

1. Special requirements for noise and acoustics management during **deconstruction and construction** operations.

1.2 DEFINITIONS

A. Ambient noise level: The total noise associated with a given environment, being usually a composite of normal or existing sounds from all sources near and far, excluding the noise source at issue.

B. Daytime: The hours from 7 A.M. to 9 P.M. on weekdays and 9 A.M. to 9 P.M. on weekends and holidays.

C. Nighttime: All non-daytime hours.

D. Property line: The real or imaginary line along the ground surface and its vertical extension, which separates real property owned or controlled by one person from contiguous real property owned or controlled by another person or from any public right-of-way or from any public space.

E. Receiving noise area: Any real property where people live or work and where noise is heard, excluding the project or source area.

PART 2 - PRODUCTS (Not Used)

PART 3 - EXECUTION

3.1 NOISE MANGEMENT

A. Noise Control: Perform **deconstruction and construction** operations to minimize noise. Perform noise-producing work in less sensitive hours of the day or week as directed by the Contracting Officer CO).

B. Repetitive and/or intermittent, high-level noise: Permitted only during Daytime.

1. Do not exceed the following dB(A) limitations at 50 feet:

Sound Level in dB(A)	Time Duration of Impact Noise
70	More than 12 minutes in any hour
80	More than 3 minutes in any hour

2. Maximum permissible construction equipment noise levels at 50 feet:

EARTHMOVING	dB(A)	MATERIALS HANDLING	dB(A)
Front Loaders	75	Concrete Mixers	75
Backhoes	75	Concrete Pumps	75
Dozers	75	Cranes	75
Tractors	75	Derricks Impact	75
Scrapers	80	Pile Drivers	95
Graders	75	Jack Hammers	75
Trucks	75	Rock Drills	80
Pavers, Stationary	80	Pneumatic Tools	80
Pumps	75	Saws	75
Generators	75	Vibrators	75
Compressors	75		

C. Ambient Noise:

1. Maximum noise levels (dB (decibel)) for receiving noise area at property line shall be as follows:

a. Residential receiving area
   Daytime: 65 dB
   Nighttime: 45 dB

b. Commercial/Industrial receiving area
   Daytime: 67 dB
   Nighttime: 65 dB

c. In the event the existing local ambient noise level exceeds the maximum allowable receiving noise level (dB), the receiving noise level maximum for construction operations shall be adjusted as follows:

d. Residential receiving area: Maximum 3 additional dB above the local ambient as measured at property line.

e. Commercial/Industrial receiving area: Maximum 5 additional dB above the local ambient as measured at the property line.

3.2 FIELD QUALITY CONTROL

A. Assess potential effects of construction noise on **facility occupants** in accordance with ASTM E1686 and as follows:

1. Ambient noise measurement: Measure at property line at a height of at least four (4) feet above the immediate surrounding surface. Average the ambient noise level over a period of at least 15 minutes.

2. Ambient noise measurement at urban sites: Conduct during morning peak traffic hour between 7 A.M. and 9 A.M. and afternoon peak traffic hour between 4 P.M. and 6 P.M. In addition, conduct a 24-hour measurement at the proposed project site to document the noise pattern throughout the day. Adjust and weight for seasonal and climatic variations.

B. Monitor noise produced from construction operations in accordance with ASTM E1780.

END OF SECTION 01 57 19.12

GOGA-244458 / FOPO-186401

SECTION 01 57 23 - UNDER-AN-ACRE POLLUTION PREVENTION

PART 1 - GENERAL

1.1 SUMMARY

A. National Park Service (NPS) Standards and Guidelines require water quality be protected to ensure compliance with Organic Act. Contractor shall prepare an Under-An-Acre Pollution Prevention Plan (UPPP) for each project resulting in less than 1 acre of soil disturbance or not otherwise subject to requirements of NPDES program. (UPPP Guideline)

B. The work of this section consists of implementing measures to prevent discharges of pollutants, including temporary storm water pollution during construction activities in conformance with NPS guidance for UPPPs.

C. Work of this section consists of implementing measures to provide Temporary Storm Water Pollution during construction activities in conformance with NPS guidance for UPPPs.

1.2 DEFINITIONS

A. Definitions pertaining to sustainable development: As defined in ASTM E2114.

B. Environmental Pollution and Damage: The presence of chemical, physical, or biological elements or agents which adversely affect human health or welfare; unfavorably alter ecological balances; or degrade utility of the environment for aesthetic, cultural, or historical purposes.

C. National Pollution Discharge Elimination System (NPDES) Phase I: Regulates discharges from construction sites that disturb 5 acres or more.

D. NPDES Phase II: Regulations expand existing General Permit requirements under Phase I to include and regulate discharges from construction sites that disturb land equal to or greater than one (1) acre and less than 5 acres, known as Small Construction Activity.

E. Storm Water Pollution Prevention Plan (SWPPP): Developed and implemented stormwater management measures to protect surface water from pollutants during construction activities disturbing an acre or more in compliance with federal, state, and local requirements for permit approval under NPDES program.

F. UPPP: Developed and implemented pollution prevention plan (including stormwater management measures, if needed) to protect environment from pollutants on construction projects with less than one acre of disturbance in conformance with NPS guidelines.

1.3 SUBMITTALS

A. After contract award and before pre-construction conference, prepare and submit:
   1. A UPPP in conformance with NPS guidelines and adherence to applicable construction storm water management practices.

B. Inspection Schedule: Submit schedule for inspection and monitoring of pollution prevention measures.

C. Inspection Schedule: Submit schedule for inspection and monitoring of storm water pollution prevention measures.

D. Erosion Control Products: Submit manufacturer's product information and installation recommendations for silt fence, filter fabric, erosion control blanket, straw bales, and other materials proposed for use on this project.

1.4 QUALITY ASSURANCE

A. Contractor shall prepare and submit a plan to Contracting Officer (CO) for review and concurrence.

B. Orientation Meeting: Contractor shall arrange and conduct an Erosion and Sediment Control meeting/briefing to inform parties, scheduled to be on-site during project, of measures to be implemented for proper erosion and sediment control (may be included as part of Pre-Construction Meeting).

   1. Installation of silt fences, storm drain protection, and other forms of erosion and sediment control shall not begin until after this meeting has occurred.

C. Orientation Meeting: Contractor shall be responsible for arranging and conducting Pollution Prevention meeting/briefing to inform parties scheduled to be on-site during project of measures to be implemented for proper pollution prevention and control (may be included as part of Pre-Construction Meeting).

   1. Installation of silt fences, storm drain protection, and other forms of pollution prevention controls shall not begin until after this meeting has occurred.

D. Pollution Prevention Manager: Contractor shall designate Pollution Prevention Manager who will be responsible for implementation, inspection, maintenance, and amendments to approved plan.

   1. Pollution Prevention Manager shall be familiar with UPPP procedures and Best Management Practices (BMPs) and shall ensure emergency procedures and plan are updated as needed and available for inspection.

   2. When changes in approved plan are required, Pollution Prevention Manager shall prepare and certify an amendment and submit to Contracting Officer for review and concurrence.

PART 2 - PRODUCTS

2.1 UNDER-AN-ACRE POLLUTION PREVENTION PLAN

A. Provide UPPP which conforms to NPS requirements (utilize UPPP template) and include:
   1. Responsible Parties
   2. General Information: Project Scope, Project Details, Site Information, and Spill Prevention
   3. Standards and Constraints
   4. Project Scheduling
   5. Known Data on Soil and Fill
   6. Activities with Potential to Generate Sediment
   7. Activities and Materials with Potential to Pollute Storm Water
   8. Management and Reporting BMPs
   9. Waste Management BMPs
   10. Non-Storm Water Pollution Control BMPs
   11. Soil Stabilization BMPs
   12. Sediment Control BMPs
   13. Other Pollution Control BMPs
   14. References
   15. Preparer's Certification
   16. Appendices: Contact Information, Pollution Prevention Control Map or Sheet(s), Standard Installation Specifications for each BMP, and Blank forms.

PART 3 - EXECUTION

3.1 ENVIRONMENTAL PROTECTION

A. Protection of Natural Resources: Comply with applicable regulations and these specifications. Preserve natural resources within project boundaries and outside limits of work performed under this Contract in their existing condition or restore to an equivalent or improved condition as approved by Contracting Officer.

B. Construction Zone: Arrange construction activities to minimize pollution (i.e., erosion, trash, etc.) to maximum practical extent.

   1. Clearing, excavation, and grading shall be limited to those areas of project site necessary for construction. Minimize area exposed and unprotected.
   2. Clearly mark and delineate limits of work activities.
   3. Equipment shall not be allowed to operate outside limits of work or to disturb existing vegetation.
   4. Excavation and grading shall be completed during dry season to maximum extent possible.
   5. Material shall be stored away from locations where water is present to greatest extent practicable.

3.2 REGULATORY REQUIREMENTS

A. Contracting Officer Notification: Contractor shall notify Contracting Officer in writing and by telephone of these events:

1. Erosion and sediment control meeting/briefing.
2. Following installation of required sediment control structures.
3. Prior to removal of or modification to sediment control structures.
4. Prior to removal of sediment control structures.

3.3 UNDER-AN_ACRE POLLUTION PREVENTION PLAN

A. Review and Acceptance: Contractor and Contracting Officer will jointly review draft Plan and agree to needed revisions. Contractor shall incorporate revisions, sign, and submit final Plan to Contracting Officer. Final Plan will be the document enforced on the project.

1. Accepted Plan will describe and ensure implementation of practices to be used to reduce pollutants in storm water discharges.
2. Contractor shall maintain current copy of Plan and associated records and forms at jobsite throughout duration of project.
3. Plan shall be available for public inspection and inspection and use of Contracting Officer.
4. Approval of Contractor's Plan will not relieve Contractor of responsibility for compliance with applicable environmental regulations.

B. Implementation: Implement Plan as required throughout construction period and maintain erosion control elements in proper working order.

1. Do not perform clearing and grubbing or earthwork until Plan has been implemented.

3.4 SITE INSPECTIONS AND PLAN REVISIONS

A. Inspections: Contractor and Contracting Officer will perform a weekly inspection onsite.

1. Inspection shall include disturbed areas not completely stabilized, areas used for storage of materials, locations where vehicles enter or exit site, and other erosion and sediment controls included in the Plan.
2. Inspections shall be documented.
3. Inspection forms shall be retained onsite in Plan notebook throughout construction period.

B. Plan Revisions: It may be necessary to revise Plan during construction to make necessary improvements, revisions, or to respond to unforeseen conditions noted during construction or site inspections.

1. Plan shall specify mechanism whereby revisions may be proposed by Contractor or Contracting Officer.
2. Contractor and Contracting Officer will jointly review each revision to Plan before changes incorporated and implemented. Contractor will then provide revised copy of Plan to Contracting Officer.

3. Accepted modifications will be implemented within 7 calendar days following date of inspection when deficiencies or necessary corrections are first noted.

C. Negligence: Provide additional temporary erosion and pollution controls made necessary by Contractor's errors or negligence at no additional cost to Government.

3.5 HOUSEKEEPING AND SITE MANAGEMENT

A. Store materials onsite in conformance to Federal, state, local, and manufacturer's regulations and specifications. Use Best Management Practices to minimize risk of materials coming into contact with environmental conditions (i.e. water and wind) that could disperse them.

B. Manage solid waste in conformance to Federal, state, and local regulations. Best Management Practices should be used to minimize risk of materials coming into contact with environmental conditions (i.e. water and wind) that could disperse them.

C. Include a spill prevention and control plan with provisions placed in SWPPP.

D. Manage hazardous waste (including contaminated soil) in conformance to Federal, state, local and NPS regulations and guidelines.

3.6 EROSION CONTROL MEASURES

A. Erosion control measures shall consist of Best Management Practices for storm water discharges, including silt fencing, barrier protectors, straw bales, temporary soil retention blankets, excelsior drainage filters, sediment traps and berms.

B. Berms and excelsior drainage filters shall be used to form sediment traps and control run-on and run-off into other areas, including creeks, streams, marshes, access roads, well areas, and staging areas.

C. Erosion control measures shall be used to contain only direct precipitation in construction zone. Contained water shall be allowed to percolate into ground or drain slowly through drainage filter sediment traps.

D. Earthen sediment traps or holding ponds shall not be used unless accepted by Contracting Officer.

E. Reduce runoff velocity and direct surface runoff around and away from fuel containment, storage, and borrow areas.

F. Divert surface runoff around and away from cut and fill slopes.

G. Place drainage filters around catch basins to create sediment traps to control run-off from construction area.

H. Excess water used for dust control shall be contained within demolition areas by erosion control measures.

I. Contractor shall prevent deposition of materials onto paved areas. Contractor shall inspect paved areas for deposited materials weekly and remove materials immediately.

J. Furnish, install, maintain, and operate necessary control measures and other equipment necessary to prevent erosion as described in approved SWPPP.

K. Furnish, install, maintain, and operate necessary control measures and other equipment necessary to prevent erosion as described in approved UPPP.

L. Before work begins, sufficient equipment shall be available on site to assure operation and adequacy of erosion control system can be maintained.

3.7 MAINTENANCE OF TEMPORARY FACILITIES

A. Ensure erosion and sediment control structures remain effective throughout excavation and grading operations. Relocate structures as necessary.

B. Inspect control structures after each significant rainfall. Promptly repair breaches which occur.

C. Contractor shall remove entrapped sediment from behind excelsior drainage filter after each storm.

3.8 REPORTING

A. If a discharge occurs or if project receives written notice or order from regulatory agency, Contractor shall immediately notify Contracting Officer and shall file written report to Agency(ies) with Jurisdiction within 7 days of discharge event, notice, or order. Corrective measures shall be implemented immediately following discharge, notice, or order. The report to the Agency(ies) with Jurisdiction shall contain:

1. Date, time, location, nature of operation, and type of discharge, including cause or nature of notice or order.
2. Best Management Practices deployed before discharge event, or prior to receiving notice or order.
3. Date of deployment and type of Best Management Practices deployed after discharge event, or after receiving notice or order, including additional Best Management Practices installed or planned to reduce or prevent re-occurrence.
4. An implementation and maintenance schedule for affected Best Management Practices.

3.9 SEDIMENT DISPOSAL

A. Sediment excavated from temporary sediment control structures shall be disposed on site with general fill, or with topsoil. Sediment shall be allowed to dry out as required before reuse.

B. Contractor shall place sediment removed from traps and other structures where it will not enter a storm drain or watercourse and where it will not immediately reenter the basin.

3.10 REMOVAL OF TEMPORARY STORM WATER POLLUTION CONTROL MEASURES

A. Temporary control measures shall be removed with permission of Contracting Officer within 20 working days after final acceptance of project, and/or once grading is complete and slopes have stabilized.

END OF SECTION 01 57 23

GOGA-244458 / FOPO-186401

SECTION 01 67 00 - PRODUCT REQUIREMENTS

PART 1 - GENERAL

1.1 SUMMARY

A. Section includes administrative and procedural requirements for selection of products for use in Project; product delivery, storage, and handling; manufacturers' standard warranties on products; special warranties; and environmental requirements.

1.2 DEFINITIONS

A. Products: Items purchased for incorporating into Work, whether purchased for Project or taken from previously purchased stock. The term "product" includes "material," "equipment," "system," and terms of similar intent.

1. Named Products: Items identified by manufacturer's product name, including make or model number or other designation shown or listed in manufacturer's published product literature, current as of date of Contract Documents.
2. New Products: Items that have not previously been incorporated into another project or facility, except that products consisting of recycled-content materials are allowed, unless explicitly stated otherwise. Products salvaged or recycled from other projects are not considered new products.
3. Comparable Product: Product demonstrated and approved through submittal process, or where indicated as a product substitution, to have indicated qualities related to type, function, dimension, in-service performance, physical properties, appearance, and other characteristics that equal or exceed those of specified product.

B. Definitions pertaining to sustainable development: As defined in ASTM E2114.

C. Biobased Materials: As defined in Farm Security and Rural Investment Act, for purposes of Federal procurement of biobased products, "biobased" means a "commercial or industrial product (other than food or feed) composed, in whole or in significant part, of biological products or renewable domestic agricultural materials (including plant, animal, and marine materials) or forestry materials." Biobased materials also include fuels, chemicals, building materials, or electric power or heat produced from biomass as defined by The Biomass Research and Development Act of 2000.

1. Biobased content: Amount of biobased carbon in material or product as a percentage of weight (mass) of total organic carbon in material or product.

D. Chain-of-Custody: Process whereby a product or material is maintained under physical possession or control during its entire life cycle.

E. Environmentally preferable products: Products and services with lesser or reduced effect on the environment in comparison to conventional products and services. Refer to Environmental Protection Agency's (EPA) Final Guidance on Environmentally Preferable Purchasing for more information.

F. Stewardship: Responsible use and management of resources in support of sustainability.

G. Sustainability: Maintenance of ecosystem components and functions for future generations.

1. Recycled Content Materials: Products containing pre-consumer or post-consumer materials as all or part of their feedstock. Recycled content claim shall be consistent with International Organization for Standardization (ISO) 140001 Standard for the Use of Environmental Marketing Claims.
2. Rapidly Renewable Material: Material made from plants typically harvested within a ten-year cycle.
3. Regional Materials: Materials manufactured and extracted, harvested, or recovered within a radius of 500 miles from Project location.

1.3 SUBMITTALS

A. Record Submittals as specified in – Sustainable Design Close-Out Documentation, submit:

1. Affirmative Procurement Reporting Form. Submit on form in Appendix A of this Section, or similar form as approved by Contracting Officer (CO).
2. Submit environmental data in accordance with Table 1 of ASTM E2129 for these products:

a. Joint Sealers
b. Paints & Coatings

.Material Safety Data Sheets (MSDS): For each product required by OSHA to have a MSDS, submit an MSDS. MSDS shall be prepared within the previous five years. Include information for MSDS Sections 1 to 16 in accordance with ANSI Z400.1 and as follows:

a. Section 1: Chemical Product and Company Identification
b. Section 2: Composition/Information on Ingredients
c. Section 3: Hazards Identification
d. Section 4: First Aid Measures
e. Section 5: Fire Fighting Measures
f. Section 6: Accidental Release Measures
g. Section 7: Handling and Storage
h. Section 8: Exposure Controls/Person Protection
i. Section 9: Physical and Chemical Properties
j. Section 10: Stability and Reactivity Data
k. Section 11: Toxicological Information. Include data used to determine the hazards cited in Section 3. Identify acute data, carcinogenicity, reproductive effects, and target organ effects.
l. Section 12: Ecological Information. Include data regarding environmental impacts during raw materials acquisition, manufacture, and use. Include data regarding environmental impacts in event of accidental release.

m. Section 13: Disposal Considerations. Include data regarding proper disposal of the chemical. Include information regarding recycling and reuse. Indicate whether or not product is considered to be "hazardous waste" according to United States EPA Hazardous Waste Regulations 40 CFR 261 (Code of Federal Regulations).
n. Section 14: Transportation Information. Identify hazard class for shipping.
o. Section 15: Regulatory Information. Identify federal, state, and local regulations applicable to the material.
p. Section 16: Other Information. Include additional information relative to recycled content, biobased content, and other information regarding environmental and health impacts.

1.4 QUALITY ASSURANCE

A. Compatibility of Options: If Contractor is given option of selecting between two or more products for use on Project, product selected shall be compatible with products previously selected, even if previously selected products were also options.

1.5 PRODUCT DELIVERY, STORAGE, AND HANDLING

A. Deliver, store, and handle products using means and methods that prevent damage, deterioration, and loss, including theft. Comply with manufacturer's written instructions.

B. Delivery and Handling:

1. Schedule delivery to minimize long-term storage at Project site and prevent overcrowding of construction spaces.
2. Coordinate delivery with installation time to ensure minimum holding time for items that are flammable, hazardous, easily damaged, or sensitive to deterioration, theft, and other losses.
3. Deliver products to Project site in undamaged condition; in manufacturer's original sealed container or other packaging system; complete with labels and instructions for handling, storing, unpacking, protecting, and installing.
4. Inspect products on delivery to ensure compliance with Contract Documents. Ensure products are undamaged and properly protected.
5. Obtain materials in biodegradable or recyclable/reusable packaging which uses minimum amount of packaging possible.

C. Storage:

1. Allow for inspection and measurement of quantity or counting of units.
2. Store materials in manner to not endanger Project structure.
3. Store products subject to damage by the elements, under cover in weather tight enclosure above ground, with ventilation adequate to prevent condensation.
4. Store cementitious products and materials on elevated platforms.
5. Store foam plastic from exposure to sunlight, except to extent necessary for period of installation and concealment.
6. Comply with product manufacturer's written instructions for temperature, humidity, ventilation, and weather-protection requirements for storage.
7. Protect stored products from damage and liquids from freezing.

8. Store loose granular materials in well-drained area on solid surfaces to prevent mixing with foreign matter.

1.6 PACKAGING

A. Where Contractor has option to provide one of listed products or equal, preference shall be given to products with minimal packaging and easily recyclable packaging as defined in ASTM D5834.

B. Maximize use of source reduction and recycling procedures outlined in ASTM D5834.

C. Provide minimum **45** percent post-consumer recycled content and minimum 100 percent recovered fiber content of industrial paperboard in accordance with EPA's Comprehensive Procurement Guidelines and ASTM D5663.

D. Provide minimum **10** percent post-consumer recycled content and minimum **10** percent recovered fiber content of carrier board in accordance with EPA's Comprehensive Procurement Guidelines and ASTM D5663.

E. Provide minimum **5** percent post-consumer recycled content and minimum **5** percent recovered fiber content of brown papers (e.g., wrapping papers and bags) in accordance with EPA's Comprehensive Procurement Guidelines and ASTM D5663.

1.7 ENVIRONMENTALLY PREFERABLE PRODUCTS

A. Provide environmentally preferable products to greatest extent possible.

1. To greatest extent possible, provide products and materials with a lesser or reduced effect on the environment considering raw materials acquisition, production, manufacturing, packaging, distribution, reuse, operation, maintenance, and/or disposal of the product.
2. Eliminate use of ozone depleting compounds during and after construction where alternative environmentally preferable products are available, consistent with either Montreal Protocol and Title VI or Clean Air Act Amendments of 1990, or equivalent overall air quality benefits that take into account life cycle impacts.
3. Use products meeting or exceeding EPA's recycled content recommendations for EPA-designated products. Use materials with recycled content such that the sum of post-consumer recycled content plus one-half of the pre-consumer content constitutes at least 10% (based on cost) of total value of the materials in project.

1.8 PRODUCT WARRANTIES

A. Warranties specified in other Sections shall be in addition to, and run concurrent with, other warranties required by Contract Documents. Manufacturer's disclaimers and limitations on product warranties do not relieve Contractor of obligations under requirements of Contract Documents.

1. Manufacturer's Warranty: Preprinted written warranty published by individual manufacturer for product specifically endorsed by manufacturer to Owner.

2. Special Warranty: Written warranty required by or incorporated into Contract Documents, either to extend time limit provided by manufacturer's warranty or to provide more rights for Owner.

B. Special Warranties: Prepare written document containing appropriate terms and identification, ready for execution. Submit draft for approval before final execution.

1. Manufacturer's Standard Form: Modified to include Project-specific information and properly executed.
2. Specified Form: When specified forms are included with Specifications, prepare written document using appropriate form properly executed.
3. Refer to Divisions 2 through 49 Sections for specific content requirements and particular requirements for submitting special warranties.

C. Submittal Time: Comply with requirements in Section 01 77 00 "Closeout Procedures."

PART 2 - PRODUCTS

2.1 PRODUCT SELECTION PROCEDURES

A. General Product Requirements: Provide products to comply with Contract Documents, undamaged and, unless otherwise indicated, new at time of installation.

1. Provide products complete with accessories, trim, finish, fasteners, and other items needed for a complete installation and indicated use and effect.
2. Standard Products: If available, and unless custom products or nonstandard options are specified, provide standard products of types produced and used successfully in similar situations on other projects.
3. Government reserves right to limit selection to products with warranties not in conflict with requirements of Contract Documents.
4. Where products are accompanied by term "as selected," Contracting Officer will make selection.
5. Where products are accompanied by term "match sample," sample to be matched is Governments.
6. Descriptive, performance, and reference standard requirements in Specifications establish "salient characteristics" of products.

B. Product Selection Procedures:

1. Product: Where Specifications name single product and manufacturer, provide named product that complies with requirements or approved equal.
2. Manufacturer/Source: Where Specifications name single manufacturer or source, provide product by named manufacturer or source that complies with requirements or approved equal.
3. Products: Where Specifications include list of names of both products and manufacturers, provide one of the products listed that complies with requirements or approved equal.
4. Manufacturers: Where Specifications include list of manufacturers' names, provide a product by one of the manufacturers listed that complies with requirements or approved equal.

5. Available Products: Where Specifications include list of names of both products and manufacturers, provide one of the products listed, or an unnamed product, that complies with requirements. Comply with provisions in Part 2 "Comparable Products" Article for consideration of an unnamed product.
6. Available Manufacturers: Where Specifications include list of manufacturers, provide a product by one of the manufacturers listed, or an unnamed manufacturer, that complies with requirements. Comply with provisions in Part 2 "Comparable Products" Article for consideration of an unnamed product.
7. Product Options: Where Specifications indicate sizes, profiles, and dimensional requirements on Drawings are based on a specific product or system, provide specified product, system, or approved equal.
8. Basis-of-Design Product: Where Specifications name product and include a list of manufacturers, provide specified product or a comparable product by one of the other named manufacturers, or approved equal. Drawings and Specifications indicate sizes, profiles, dimensions, and other characteristics based on the product named.
9. Visual Matching Specification: Where Specifications require matching an established Sample, select product that complies with requirements and matches Architect's sample. Contracting Officers decision will be final on whether a proposed product matches.

    a. If no product available within specified category matches and complies with other specified requirements, comply with provisions in Part 2 "Product Substitutions" Article for proposal of product.

10. Visual Selection Specification: Where Specifications include phrase "as selected from manufacturer's colors, patterns, textures" or a similar phrase, select a product that complies with other specified requirements.

    a. Standard Range: Where Specifications include phrase "standard range of colors, patterns, textures" or similar phrase, Contracting Officer will select color, pattern, density, or texture from manufacturer's product line that does not include premium items.
    b. Full Range: Where Specifications include phrase "full range of colors, patterns, textures" or similar phrase, Contracting Officer will select color, pattern, density, or texture from manufacturer's product line that includes both standard and premium items.

2.2 COMPARABLE PRODUCTS

A. Conditions: Contracting Officer will consider Contractor's request for comparable product when the following conditions are satisfied. If following conditions are not satisfied, Contracting Officer will return requests without action, except to record noncompliance with these requirements:

1. Evidence proposed product does not require revisions to Contract Documents, that it is consistent with Contract Documents and will produce indicated results and is compatible with other portions of Work.
2. Detailed comparison of significant qualities of proposed product with those named in Specifications. Significant qualities include attributes such as performance, weight, size, durability, visual effect, and specific features and requirements indicated.
3. Evidence proposed product provides specified warranty.

4. List of similar installations for completed projects with project names and addresses and names and addresses of architects and owners, if requested.
5. Samples, if requested.

PART 3 - EXECUTION

3.1 PROTECTION AFTER INSTALLATION

A. Provide adequate coverings as necessary to protect installed materials from damage resulting from natural elements, traffic, and subsequent construction. Remove when no longer needed.

END OF SECTION 01 67 00

AFFIRMATIVE PROCUREMENT REPORTING FORM
Recycled Content Materials & Biobased Content Materials

Project Name: _____ Project Number: _____

Contractor Name: _____ License Number: _____

Contractor Address: _____

Product	Total $ value provided	Total $ value with recycled content Pre-consumer	Total $ value with recycled content Post-consumer	Total $ value with biobased content	Exempted indicate 1,2,3,4	Comments
Hydraulic Mulch (paper based)						
Hydraulic Mulch (wood based)						
Compost						
Parking Stops (Concrete w/ fly ash, slag cement or low cement content)						
Parking Stops (Plastic/Rubber)						
Patio Blocks/Rubber						
Patio Blocks/Plastic						
Playground Surfaces						
Concrete with fly ash						
Concrete with slag cement						
Concrete with low cement content						
Plastic lumber						
Building Insulation						
Rock Wool						
Fiber glass						
Cellulose						
Perlite Comp Board						
Plastic Rigid Foam						
Glass Fiber Reinforced Foam						
Phenolic Rigid Foam						
Ceramic tile						
Resilient flooring						
Floor Tiles/Rubber						
Floor Tiles/Plastic						
Running Tracks						
Carpet (PET)						
Paint						

Reprocessed Latex Paint White & Light Colors						
Reprocessed Latex Dark Colors						
Consolidated Latex Paint						
Toilet/Shower partitions (plastic or steel)						
Other						

CERTIFICATION

I hereby certify the information provided herein is accurate and that the requisition/procurement of all materials listed on this form comply with current EPA standards for recycled/recovered materials content. The following exemptions may apply to the non-procurement of recycled/recovered content materials:

1. The product does not meet appropriate performance standards.
2. The product is not available within a reasonable time frame.
3. The product is not available competitively (from two or more sources).
4. The product is only available at an unreasonable price (compared with a comparable non-recycled content product.)

Signature: _____ Date: _____

END OF
AFFIRMATIVE PROCUREMENT REPORTING FORM
Recycled Content Materials & Biobased Content Materials

GOGA-244458 / FOPO-186401

SECTION 01 73 40 - EXECUTION

PART 1 - GENERAL

1.1 SUMMARY

A. Section includes general procedural requirements governing execution of Work including:

1. Coordination with utility service providers
2. Construction layout
3. Field engineering and surveying
4. General installation of products
5. Progress cleaning
6. Starting and adjusting
7. Protection of installed construction
8. Correction of the Work

1.2 SUBMITTALS

A. Certificates: Submit certificate signed by **land surveyor** certifying location and elevation of improvements comply with requirements.

B. Landfill Receipts: Submit copy of receipts issued by landfill facility, licensed to accept hazardous materials, for hazardous waste disposal.

1.3 QUALITY ASSURANCE

A. Land Surveyor Qualifications: Professional **land surveyor** legally qualified to practice in jurisdiction where Project is located and-is experienced in providing land-surveying services of kind indicated.

PART 2 - PRODUCTS (Not Used)

PART 3 - EXECUTION

3.1 EXAMINATION

A. Existing Conditions: Existence and location of site improvements and other construction indicated as existing are not guaranteed.

1. Before beginning work, investigate and verify the existence and location of mechanical and electrical systems and other construction affecting the Work.

2. Before construction, verify the location and points of connection of utility services.

B. Existing Utilities: Existence and location of underground and other utilities and construction indicated as existing are not guaranteed. Before beginning sitework, investigate and verify existence and location of underground utilities and other construction affecting Work.

1. Before construction, verify location and invert elevation at points of connection of sanitary sewer, storm sewer, and water-service piping; and underground electrical services.
2. Furnish location data for work related to Project that must be performed by public utilities serving Project site.

C. Acceptance of Conditions: Examine substrates, areas, and conditions, with Installer or Applicator present where indicated, for compliance with requirements for installation tolerances and other conditions affecting performance. Record observations.

1. Verify compatibility with and suitability of substrates, including compatibility with existing finishes or primers.
2. Examine roughing-in for electrical systems to verify actual locations of connections before equipment and fixture installation.
3. Proceed with installation only after unsatisfactory conditions have been corrected. Proceeding with the Work indicates acceptance of surfaces and conditions.

3.2 COORDINATION WITH UTILITY SERVICE PROVIDERS

A. Coordination with Utility Service Providers: Contact following Utility Service providers, sufficiently in advance to avoid delaying the work, to coordinate Contractor's portion of Work, testing requirements, inspections.

1. Coordinate with Presidio Trust High Voltage Group to de-energize the electrical connection to the existing access control gate as-needed.

2. EV Charging Station: Service Contact: Coordinate with Contracting Officer
   a. Construction Contractor may be required to provide conduit or other services to support relocation of the EV station system. Government will contract separately with EV station contractor.

3. Electrical: Service Contact: Coordinate with Contracting Officer.

   a. Construction Contractor Responsibilities: Contractor is responsible for retaining a qualified electrical sub-contractor to design and perform relocation of parking lot area lights.

3.3 PREPARATION

A. Field Measurements: Take field measurements as required to fit Work properly. Recheck measurements before installing each product. Where portions of Work are indicated fit to other

construction, verify dimensions of other construction by field measurements before fabrication. Coordinate fabrication schedule with construction progress to avoid delaying Work.

B. Space Requirements: Verify space requirements and dimensions of items shown diagrammatically on Drawings.

C. Review of Contract Documents and Field Conditions: Immediately on discovery of need for clarification of the Contract Documents caused by differing field conditions outside control of Contractor, submit request for information to Contracting Officer in accordance with Section 01 31 00 "Project Management and Coordination."

3.4 CONSTRUCTION LAYOUT

A. Verification: Verify layout information shown on Drawings, in relation to the existing benchmarks before proceeding to lay out Work. Notify Contracting Officer promptly if discrepancies are discovered.

B. General: Engage a **land surveyor** to lay out Work using accepted surveying practices.

1. Establish benchmarks and control points to set lines of construction and elsewhere as needed to locate each element of Project.
2. Establish dimensions within tolerances indicated. Do not scale Drawings to obtain required dimensions.
3. Inform installers of lines and levels to which they must comply.
4. Check location, level and plumb, of every major element as Work progresses.
5. Notify Contracting Officer when deviations from required lines and levels exceed allowable tolerances.
6. **Close site surveys with an error of closure equal to or less than the established standard.**

C. Site Improvements: Locate and lay out site improvements, including pavements, grading, fill and topsoil placement, utility slopes, and invert elevations.

D. Building Lines and Levels: Locate and lay out control lines and levels for structures, building foundations, column grids, and floor levels, including those required for mechanical and electrical work. Transfer survey markings and elevations for use with control lines and levels. Level foundations and piers from two or more locations.

E. Record Log: Maintain log of layout control work. Record deviations from required lines and levels. Include beginning and ending dates and times of surveys, weather conditions, name and duty of each survey party member, and types of instruments and tapes used. Make log available for review by National Park Service (NPS).

3.5 FIELD ENGINEERING

A. Reference Points: Locate existing permanent benchmarks, control points, and similar reference points before beginning Work. Preserve and protect permanent benchmarks and control points during construction operations. Controls destroyed by Contractor will be replaced by Contractor at their expense.

1. Existing Monuments: All benchmarks, land corners, and triangulation points, established by other surveys, existing within construction area shall be preserved. If existing monuments interfere with Work, secure written permission before removing them.

B. Benchmarks: Establish and maintain a minimum of **two** permanent benchmarks on Project site, referenced to data established by survey control points. Comply with NPS requirements for type and size of benchmark.

1. Record benchmark locations, with horizontal and vertical data, on Project Record Documents.

3.6 INSTALLATION

A. General: Locate Work and components of Work accurately in correct alignment and elevation, as indicated.

1. Make vertical work plumb and make horizontal work level.
2. Where space is limited, install components to maximize space available for maintenance and ease of removal for replacement.
3. Conceal pipes and wiring in finished areas, unless otherwise indicated.

B. Comply with manufacturer's written instructions and recommendations for installing products in applications indicated.

C. Install products at the time and under conditions for best possible results. Maintain conditions required for product performance until Substantial Completion.

D. Conduct construction operations so no part of the Work is subjected to damaging operations or loading in excess of that expected during normal conditions of occupancy.

E. Tools and Equipment: Do not use tools or equipment that produce harmful noise levels.

F. Templates: Obtain and distribute to parties involved templates for work specified to be factory prepared and field installed. Check Shop Drawings of other work to confirm adequate provisions are made for locating and installing products to comply with indicated requirements.

G. Anchors and Fasteners: Provide anchors and fasteners as required to anchor each component securely in place, accurately located and aligned with other portions of Work.

1. Mounting Heights: Where mounting heights are not indicated, mount components at heights directed by Contracting Officer.
2. Allow for building movement, thermal expansion, and contraction.
3. Coordinate installation of anchorages. Furnish setting drawings, templates, and directions for installing anchorages, including sleeves, concrete inserts, anchor bolts, and items with integral anchors to be embedded in concrete or masonry. Deliver to Project site in time for installation.

H. Joints: Make joints of uniform width. Where joint locations in exposed work are not indicated, arrange joints for best visual effect. Fit exposed connections together to form hairline joints.

I. Hazardous Materials: Use products, cleaners, and installation materials not considered hazardous.

3.7 PROGRESS CLEANING

A. General: Clean Project site, work areas, and common areas daily. Coordinate progress cleaning for joint-use areas where more than one Installer has worked. Enforce requirements strictly. Dispose of materials lawfully.

1. Comply with requirements in National Fire Protection Association (NFPA) 241 for removal of combustible waste materials and debris at the end of every work session.
2. Do not hold materials more than 7 days during normal weather or 3 days if the temperature is expected to rise above 80 degrees Fahrenheit (27 degrees Celsius).
3. Containerize hazardous and unsanitary waste materials separately from other waste. Mark containers appropriately and dispose of legally, according to regulations.

B. Site: Maintain Project site free of waste materials and debris.

C. Work Areas: Clean areas where work is in progress to level of cleanliness necessary for proper execution of Work.

1. Remove liquid spills promptly.
2. Where dust would impair proper execution of Work, broom-clean or vacuum entire work area, as appropriate.
3. Contractor shall provide progress cleaning that minimizes sources of food, water, and harborage available to pests.

D. Installed Work: Keep installed work clean. Clean installed surfaces according to written instructions of manufacturer or fabricator of product installed, using only cleaning materials specifically recommended. If specific cleaning materials are not recommended, use cleaning materials not hazardous to health or property and will not damage exposed surfaces.

1. Utilize non-toxic cleaning materials and methods.

a. Comply with Green Seal Standard (GS) 37 for general purpose cleaning and bathroom cleaning.
b. Use natural cleaning materials where feasible. Natural cleaning materials include:

1) Abrasive cleaners: substitute 1/2 lemon dipped in borax.
2) Ammonia: substitute vinegar, salt and water mixture, or baking soda and water.
3) Disinfectants: substitute 1/2 cup borax in gallon water.
4) Drain cleaners: substitute 1/4 cup baking soda and 1/4 cup vinegar in boiling water.
5) Upholstery cleaners: substitute dry cornstarch.

E. Concealed Spaces: Remove debris from concealed spaces before enclosing the space.

F. Exposed Surfaces in Finished Areas: Clean exposed surfaces and protect from damage and deterioration at time of Substantial Completion.

G. Waste Disposal: Do not bury or burn waste materials on-site. Do not wash waste materials down sewers or into waterways.

H. Clean and protect construction in progress and adjoining materials already in place during handling and installation. Apply protective covering where required to ensure protection from damage or deterioration at Substantial Completion.

I. Clean and provide maintenance on completed construction as frequently as necessary through remainder of the construction period. Adjust and lubricate operable components to ensure operability without damaging effects.

J. Limiting Exposures: Supervise construction operations so that no part of construction completed or in progress, is subject to harmful, dangerous, damaging, or deleterious exposure during construction period.

K. Final Cleaning: At completion of Work, remove remaining waste materials, rubbish, tools, equipment, machinery and surplus materials. Clean exposed surfaces and leave Project clean and ready for occupancy.

1. Provide final cleaning in accordance with ASTM E1971.

3.8 STARTING AND ADJUSTING

A. Start equipment and operating components to confirm proper operation. Remove malfunctioning units, replace with new units, and retest.

B. Adjust operating components for proper operation without binding. Adjust equipment for proper operation.

C. Test each piece of equipment to verify proper operation. Test and adjust controls and safeties. Replace damaged and malfunctioning controls and equipment.

D. Manufacturer's Field Service: If factory-authorized service representative is required to inspect field-assembled components and equipment installation, comply with qualification requirements in Section 01 40 00 "Quality Requirements."

3.9 PROTECTION OF INSTALLED CONSTRUCTION

A. Provide final protection and maintain conditions that ensure installed Work is without damage or deterioration at time of Substantial Completion.

B. Comply with manufacturer's written instructions for temperature and relative humidity.

3.10 CORRECTION OF THE WORK

A. Repair or remove and replace defective construction. Restore damaged substrates and finishes. Comply with requirements in Section 01 73 29 "Cutting and Patching."

1. Repairing includes replacing defective parts, refinishing damaged surfaces, touching up with matching materials, and properly adjusting operating equipment.

B. Restore permanent facilities used during construction to specified condition.

C. Remove and replace damaged surfaces exposed to view if surfaces cannot be repaired without visible evidence of repair.

D. Repair components that do not operate properly. Remove and replace operating components that cannot be repaired.

E. Remove and replace chipped, scratched, and broken glass or reflective surfaces.

END OF SECTION 01 73 40

GOGA-244458 / FOPO-186401

SECTION 01 74 19 - CONSTRUCTION WASTE MANAGEMENT AND DISPOSAL

PART 1 - GENERAL

1.1 SUMMARY

A. Section includes administrative and procedural requirements for:

1. Recycling nonhazardous demolition and construction waste.
2. Disposing of nonhazardous demolition and construction waste.

1.2 DEFINITIONS

A. Construction Waste: Building and site improvement materials and other solid waste resulting from construction, remodeling, renovation, or repair operations. Construction waste includes packaging.

B. Demolition Waste: Building and site improvement materials resulting from demolition or selective demolition operations.

C. Solid Waste: Garbage, debris, sludge, or other discharged material (except hazardous waste) including solid, liquid, semisolid, or contained gaseous materials resulting from domestic, industrial, commercial, mining, or agricultural operations.

D. Debris: Non-hazardous solid waste generated during construction, demolition, or renovation of a structure which exceeds 2.5 inch (60 millimeter) particle size that is: a manufactured object; plant or animal matter; or natural geologic material (e.g. cobbles and boulders). A mixture of debris and other material such as soil or sludge is also subject to regulation as debris if mixture is comprised primarily of debris by volume, based on visual inspection.

E. Disposal: Removal off-site of demolition and construction waste and subsequent sale, recycling, reuse, or deposit in landfill or incinerator acceptable to authorities having jurisdiction.

F. Environmental Pollution and Damage: Presence of chemical, physical, or biological elements or agents which adversely affect human health or welfare; unfavorably alter ecological balances; or degrade utility of environment for aesthetic, cultural, or historical purposes.

G. Garbage: Refuse and scraps resulting from preparation, cooking, dispensing, and consumption of food.

H. Hazardous Materials: Material regulated as a hazardous material in accordance with 49 CFR 173 (Code of Federal Regulations), requires a Material Safety Data Sheet (MSDS) in accordance with 29 CFR 1910.1200, or which during end use, treatment, handling, storage, transportation or

disposal meets or has components which meet or have potential to meet the definition of Hazardous Waste in accordance with 40 CFR 261.

I. Recycle: Recovery of demolition or construction waste for subsequent processing in preparation for reuse.

J. Salvage: Recovery of demolition or construction waste and subsequent sale or reuse in another facility.

K. Single-use plastic products: Plastic items intended to be disposed of immediately after use, including plastic and polystyrene food and beverage containers, bottles, straws, cups, cutlery, and disposable plastic bags.

1.3 PERFORMANCE REQUIREMENTS

A. General: Project shall minimize creation of construction, deconstruction, and demolition waste to protect and restore natural habitat and resources. Minimize factors contributing to waste such as over packaging, improper storage, ordering error, poor planning, breakage, mishandling, single-use plastic products, and contamination. A Waste Management Plan shall be developed to ensure that existing site and building materials are reused, salvaged, or recycled. Minimize waste disposal in landfills.

B. If waste materials encountered during deconstruction/demolition or construction phase are found to contain lead, asbestos, polychlorinated biphenyls (PCBs), (such as fluorescent lamp ballasts), or other harmful substances, they are to be handled and removed in accordance with local, state, and federal laws and requirements concerning hazardous waste.

C. Existing items and material to be removed during deconstruction/demolition phase shall be reused in construction phase of the Project. Items that cannot be reused shall be recycled. Items considered for reuse must be in refurbishable condition and must meet quality standards set forth in these specifications. Contractor shall ensure quality of the item(s) in question will meet or exceed accepted industry or trade standards for first quality commercial grade application. During construction, deconstruction, or demolition Contracting Officer (CO) may designate other objects or materials for reuse.

1.4 SUBMITTALS

A. Waste Management Plan: After award of contract and prior to scheduled Pre-Construction Conference, Contractor shall submit a draft Waste Management Plan to Contracting Officer for approval. Submit three copies of plan. Revise and resubmit Plan as required by Contracting Officer. Approval of Contractor's Plan will not relieve Contractor of responsibility for compliance with applicable environmental regulations.

B. Waste Reduction Calculations: Before request for Substantial Completion, submit three copies of calculated end-of-Project rates for salvage, recycling, and disposal as a percentage of total waste generated by the Work.

C. Landfill and Incinerator Disposal Records: Indicate receipt and acceptance of waste by landfills and incinerator facilities licensed to accept them. Include manifests, weight tickets, receipts, and invoices.

D. Qualification Data: For Waste Management Coordinator.

E. Progress payment requirements:

1. With each Application for payment, submit an updated Project Waste Management Plan worksheet for solid waste disposal and diversion.
2. With each Application for Payment, submit manifests, weight tickets, receipts, and invoices specifically identifying the Project and waste material.

F. Closeout Submittals

1. With Closeout Submittals, submit a summary of a Project Waste Management Plan worksheet for solid waste disposal and diversion.

1.5 QUALITY ASSURANCE

A. Waste Management Coordinator Qualifications: Experienced firm, with record of successful waste management coordination of projects with similar requirements, that employs a LEED™-Accredited Professional, certified by USGBC, as waste management coordinator.

B. Regulatory Requirements: Comply with hauling and disposal regulations of authorities having jurisdiction.

C. Waste Management Meeting: Conduct separate meeting or cover in Pre-Construction Conference and comply with requirements in Section 01 31 00 "Project Management and Coordination." Review methods and procedures related to waste management including:

1. Review and discuss waste management plan including responsibilities of Waste Management Coordinator.
2. Review requirements for documenting quantities of each type of waste and its disposition.
3. Review and finalize procedures for materials separation and verify availability of containers and bins needed to avoid delays.
4. Review procedures for periodic waste collection and transportation to recycling and disposal facilities.
5. Review procedures for reduction of single-use plastic products on site.
6. Review waste management requirements for each trade.

PART 2 - PRODUCTS

2.1 WASTE MANAGEMENT PLAN

A. General: Develop plan consisting of waste identification and waste reduction work plan. Include separate sections in plan for demolition and construction waste. Indicate quantities by weight or volume but use same units of measure throughout waste management plan.

B. Waste Identification: Indicate anticipated types and quantities of demolition, site-clearing and construction waste generated by the Work. Include estimated quantities and assumptions for estimates.

C. Waste Reduction Work Plan: List each type of waste and whether it will be salvaged, recycled, or disposed of in landfill or incinerator. Include points of waste generation, total quantity of each type of waste, quantity for each means of recovery, and handling and transportation procedures.
   1. Recycled Materials: Include list of local receivers and processors and type of recycled materials each will accept. Include names, addresses, and telephone numbers.
   2. Disposed Materials: Indicate how and where materials will be disposed of. Include name, address, and telephone number of each landfill and incinerator facility.
   3. Handling and Transportation Procedures: Include method used for separating recyclable waste including sizes of containers, container labeling, and designated location on Project site where materials separation will be located.
   4. Reduction of single-use plastic products: Include methods for water distribution to include bottle refilling stations if available for personnel.

D. Cost/Revenue Analysis: Indicate total cost of waste disposal as if there was no waste management plan and net additional cost or net savings resulting from implementing waste management plan. Include:

   1. Landfill tip fees per ton.
   2. If diverted, tip fee savings from landfill diversion.
   3. Costs of recycling, salvage, or reuse.
   4. Revenue from recycling, salvage, or reuse.
   5. Total cost or savings from diversion. (Calculate by using tip fee savings and subtracting costs of recycling or adding revenue from recycling.)

PART 3 - EXECUTION

3.1 PLAN IMPLEMENTATION

A. General: Implement waste management plan as approved by Contracting Officer. Provide handling, containers, storage, signage, transportation, and other items as required to implement waste management plan during entire duration of Contract.

B. Waste Management Coordinator: Engage waste management coordinator responsible for implementing, monitoring, and reporting status of waste management work plan. Coordinator shall be present at Project site full time for duration of Project.

C. Contractor shall establish contacts with local recycling and reuse companies to set up lines of responsibility. Contractor shall be responsible for coordination in terms of identifying materials, pickup schedules, and standard quality for recycled materials.

D. Training: Train workers, subcontractors, and suppliers on proper waste management procedures, as appropriate for the Work occurring at Project site.

   1. Distribute waste management plan to everyone concerned within [**three**] days of submittal return.

2. Distribute waste management plan to entities when they begin work on-site. Review plan procedures and locations established for salvage, recycling, and disposal.

E. Site Access and Temporary Controls: Conduct waste management operations to ensure minimum interference with roads, streets, walks, walkways, and other adjacent occupied and used facilities.

F. Separation facilities:

1. Contractor shall designate and Contracting Officer shall approve specific area or areas to facilitate separation of materials for potential reuse, salvage, recycling, and return.
2. Place waste and recycling bins near each other, and close to point of waste generation but out of traffic pattern.
3. Keep recycling and waste bin areas neat, clean, and clearly marked in order to avoid co-mingling of materials.
4. Protect bins during non-working hours from off-site contamination.
5. Check garbage dumpsters periodically for recyclables being thrown away and undocumented materials that could be recycled.

G. Materials handling procedures: Material to be recycled shall be protected from contamination and shall be handled, stored, and transported in a manner that meets requirements set by designated facilities for acceptance. Establish defined area for operations of each trade, especially woodcutting so off-cuts are kept in one area and can be sorted by dimension for future reuse.

3.2 SALVAGING DEMOLITION WASTE

A. Salvaged Items for Sale and Donation: Not permitted on Project site.

B. Salvaged Items for Governments Use:

1. Clean salvaged items.
2. Pack or crate items after cleaning. Identify contents of containers.
3. Allow for inspection if necessary.
4. Store items in secure area until delivery to Government.
5. Transport items to storage area off-site designated by Government.
6. Protect items from damage during transport and storage.

3.3 RECYCLING DEMOLITION AND CONSTRUCTION WASTE, GENERAL

A. General: Recycle paper and beverage containers used by on-site workers.

B. Recycling Receivers and Processors: List below is provided for information only; available recycling receivers and processors include:

1. Bay Area Construction & Demolition Recycling Facilities

Marin Resource Recovery
565 Jacoby Street
San Rafael, CA
415-485-5646

Recology (preferred vendor in San Francisco)
501 Tunnel Ave
San Francisco, CA
1-888-404-4008 (debris box);

415-330-1400 (transfer station)

Redwood Landfill and Recycling Center
8950 Redwood Highway
Novato, CA
415-892-2851

Redwood Empire Disposal
3400 Standish Avenue
Santa Rosa, CA
1-800-243-0291

Mill Valley Refuse Service

112 Front Street
San Rafael, CA
415-457-9760

Bay Cities Refuse Service (required vendor in Marin Headlands)
2525 Garden Tract Road
Richmond, CA
415-332-3646

C. Recycling Incentives: Revenues, savings, rebates, tax credits, and other incentives received for recycling waste materials shall accrue to Contractor.

D. Procedures: Separate recyclable waste from other waste materials, trash, and debris. Separate recyclable waste by type at Project site to maximum extent practical.

1. Provide appropriately marked containers or bins for controlling recyclable waste until removed from Project site. Include list of acceptable and unacceptable materials at each container and bin.

   a. Inspect containers and bins for contamination and remove contaminated materials if found.

2. Stockpile processed materials on-site without intermixing with other materials. Place, grade, and shape stockpiles to drain surface water. Cover to prevent windblown dust.
3. Stockpile materials away from construction area. Do not store within drip line of remaining trees.
4. Store components off ground and protect from weather.
5. Remove recyclable waste off Government property and transport to recycling receiver or processor.

3.4 RECYCLING DEMOLITION WASTE

A. Asphaltic Concrete Paving: Break up and transport paving to asphalt-recycling facility.

1. Crush asphaltic concrete paving and screen to comply with requirements in Division 31 Section "Earth Moving".

B. Concrete: Remove reinforcement and other metals from concrete and sort with other metals.

3.5 RECYCLING CONSTRUCTION WASTE

A. Packaging:

1. Cardboard and Boxes: Break down packaging into flat sheets. Bundle and store in dry location.

2. Polystyrene Packaging: Separate and bag materials.
3. Pallets: As much as possible, require deliveries using pallets to remove pallets from Project site. For pallets that remain on-site, break down pallets into component wood pieces and comply with requirements for recycling wood.
4. Crates: Break down crates into component wood pieces and comply with requirements for recycling wood.

B. Site-Clearing Wastes: Chip brush, branches, and trees on-site or as directed by Contracting Officer.

C. Wood Materials:

1. Clean Cut-Offs of Lumber: Grind or chip into small pieces.
2. Clean Sawdust: Bag sawdust not containing painted or treated wood.

D. Gypsum Board: Stack large clean pieces on wood pallets and store in dry location.

1. Clean Gypsum Board: Grind scraps of clean gypsum board using small mobile chipper or hammer mill. Screen out paper after grinding.

3.6 DISPOSAL OF WASTE

A. General: Except for items or materials to be salvaged, recycled, or otherwise reused, remove waste materials from Project site and legally dispose in landfill or incinerator acceptable to authorities having jurisdiction.

1. Except as otherwise specified, do not allow waste materials to accumulate on-site.
2. Remove and transport debris in manner preventing spillage on adjacent surfaces and areas.

B. Burning: Do not burn waste materials.

C. Burning: Burning of waste materials allowed only at designated areas on Government property, provided required permits are obtained. Provide full-time monitoring for burning materials until fires are extinguished.

D. Disposal: Transport waste materials off Government property and legally dispose of them.

END OF SECTION 01 74 19

Project Waste Management Plan Worksheet Sample

National Park Service (NPS) - Denver Service Center (DSC) | 10-13-21

	A	B	C	D	E	F	G	H	I	J
Material	**Quantity Recycled (in tons)**	**Quantity Salvaged or Reused (in tons)**	**A + B = Total Quantity Diverted from Landfill**	**Quantity to Landfill (in tons)**	**C + D = Total Quantity Generated (in tons)**	**Tip Fee/Ton at Landfill**	**C x F = Tip Fee Savings resulting from Landfill Diversion**	**Cost of Recycling (R), Salvage (S), or Reuse (Re)** (Specify R, S, or Re)	**Revenue from Recycling (R), Salvage (S), or Reuse (Re)** (Specify R, S, or Re)	**G - H + I = Total Cost (-) or Savings (+) from Diversion**
Asphalt/Concrete										
Brick/Masonry/Tile										
Building Materials (doors, windows, fixtures, shingles, lumber, insulation, sheet goods, etc.)										
Carpet										
Carpet Padding, Foam Only										
Cardboard										
Ceiling Tile										
Drywall										
Glass										
Scrap Metal Aluminum										
Copper										
Steel										
Unpainted Wood & Pallets										
Yard Trimmings, Brush, Trees, Stumps, etc.										
Garbage/Trash										
Other										
Column Totals										
	Total Quantity Recycled	Total Quantity Reused or Salvaged	Total Quantity Diverted from Landfill	Total Quantity to Landfill	Total Quantity Generated		Tip Fee Savings from Diversion	Total Cost of Recycling, Salvage, or Reuse	Revenue from Recycling, Salvage, or Reuse	Total Cost (-) or Savings (+) from Diversion

Percentage Diverted = _____ (C divided by E from Column Totals). Should meet 60% diversion goal.

GOGA-244458 / FOPO-186401

SECTION 01 77 00 - CLOSEOUT PROCEDURES

PART 1 - GENERAL

1.1 SUMMARY

A. Section includes administrative and procedural requirements for contract closeout, including:

1. Project Record Drawings
2. Closeout Submittals
3. Substantial Completion and Final Inspection
4. Permit Closure and Transfer
5. Final Acceptance of the Work
6. Warranties

1.2 PROJECT RECORD DRAWINGS

A. Maintain one complete full-size set of contract drawings and one full-size set of vendor-supplied drawings. Clearly mark changes, deletions, and additions using National Park Service (NPS) drafting standards to show actual construction conditions. Show additions in red, deletions in green and special instructions in blue.

B. Keep record drawings current. Make record drawings available to Contracting Officer (CO) for inspection at the time of monthly progress payment requests. If project record drawings are not current, Contracting Officer may retain an appropriate amount of progress payment.

C. Submit complete record drawings on completion of total project. Include shop drawings, sketches, and additional drawings to be included in final set, with clear instructions showing the location of these drawings.

1.3 CLOSEOUT SUBMITTALS

A. A list of closeout requirements has been attached at the end of this Section for your convenience. The intent is to provide an overall summary of requirements and not a comprehensive list. Terms and conditions of the contract require satisfaction of requirements of individual specification sections regardless of what is shown on the list. Submit the following before requesting final inspection:

1. Specific warranties, guarantees, workmanship bonds, final certifications, and similar documents.
2. Project Record Documents, operation and maintenance manuals, final completion construction digital images recorded on CD-R (compact disc-recordable) or DVD-R

(digital video disc-recordable) with index and descriptions, and similar final record information.

3. Environmental Record Documents:
   a. Material Safety Data Sheet (MSDS) Data: As specified in relevant sections.
   b. Affirmative Procurement Reporting Form: As specified in Section 01 67 00 – Product Requirements. Environmental Requirements for Products.
   c. Environmental Product Data: As specified in Section 01 67 00 – Product Requirements. Environmental Requirements for Products.
   d. Life-Cycle Assessment (LCA) Data: As specified in 01 67 00 – Product Requirements. - Environmental Requirements for Products.
   e. Final Summary of Solid Waste Disposal and Diversion: As specified in Section 01 74 19 Construction Waste Management.
4. Deliver tools, spare parts, extra materials, and similar items to location designated by Contracting Officer. Label with manufacturer's name and model number where applicable.

   a. Special Tools: One set of special tools required to operate, adjust, dismantle, or repair equipment. Special tools are those not normally found in possession of mechanics or maintenance personnel.
5. Terminate and remove temporary facilities, mockups, construction tools, and similar elements from Project site, complete final cleaning requirements, including touchup painting.
6. Touch up and repair and restore marred exposed finishes to eliminate visual defects.
7. Instruct NPS personnel in operation, adjustment, and maintenance of products, equipment, and systems.

1.4 FINAL INSPECTION, SUBSTANTIAL COMPLETION AND ACCEPTANCE PROCEDURES

A. Request final inspection in writing when project or designated portion of project is substantially complete. Contracting Officer will proceed with inspection within 10 days of receipt of written request or will advise Contractor of items that prevent project from being substantially complete.

B. If work is determined substantially complete, following final inspection, Contracting Officer will prepare Punch List and issue a Letter of Substantial Completion.

C. If work is not determined substantially complete following final inspection, Contracting Officer will notify Contractor in writing. Contractor shall request new final inspection after completing work. Re-inspection costs may be charged against Contractor in accordance with Inspection of Construction contract clause.

D. If Contractor completes items of work on Punch List and contractually required items, Contracting Officer will issue Letter of final acceptance of work.

E. If Contractor fails to complete work within the time frame, Contracting Officer may correct work with an appropriate reduction in contract price or charge for re-inspection costs in accordance with Inspection of Construction contract clause.

1.5 PERMIT CLOSURE AND TRANSFER

A. When work covered by the permits is complete, create list of tasks required to close or transfer permits to Park. Submit to Contracting Officer for approval.

B. After substantial completion and Punch List completion, permits shall be closed and documented by Agency(ies) with Jurisdiction for the permit.

C. If responsibility for permits is to be transferred to Park, Park shall be informed of permit provisions completed and responsibilities transferring to Park staff.

1.6 WARRANTIES

A. Submittal Time: Submit written warranties on request of Contracting Officer for designated portions of Work where commencement of warranties other than date of Substantial Completion is indicated.

B. Organize warranty documents into an orderly sequence based on table of contents of Project Manual.

1. Bind warranties and bonds in heavy-duty, 3-ring, vinyl-covered, loose-leaf binders, thickness as necessary to accommodate contents, and sized to receive 8-1/2 by 11 inch (215 by 280 millimeters) paper.
2. Provide heavy paper dividers with plastic-covered tabs for each separate warranty. Mark tab to identify product or installation. Provide typed description of product or installation, including name of product and name, address, and telephone number of Installer.
3. Identify each binder on front and spine with typed or printed title "WARRANTIES," Project name, and name of Contractor.
4. Warranty Electronic File: Scan warranties and bonds and assemble complete warranty and bond submittal package into a single indexed electronic PDF (portable document format) file with links enabling navigation to each item. Provide bookmarked table of contents at beginning of document.

C. Provide additional copies of each warranty in operation and maintenance manuals.

PART 2 - PRODUCTS

2.1 MATERIALS

A. See Division 1 Specification Section "Execution" for information on cleaning agents.

PART 3 - EXECUTION

3.1 FINAL CLEANING

A. General: Conduct final cleaning and waste-removal operations to comply with local laws and ordinances and Federal and local environmental and antipollution regulations.

B. Cleaning: Employ experienced workers or professional cleaners for final cleaning. Clean each surface or unit to condition expected in an average commercial building cleaning and maintenance program. Comply with manufacturer's written instructions.

1. Complete following cleaning operations before requesting inspection for certification of Substantial Completion for entire Project or for a portion of Project:

a. Clean Project site, yard, and grounds, in areas disturbed by construction activities, including landscape development areas, of rubbish, waste material, litter, and other foreign substances.
b. Sweep paved areas broom clean. Remove petrochemical spills, stains, and other foreign deposits.
c. Rake grounds that are neither planted nor paved to smooth, even-textured surface.
d. Remove tools, construction equipment, machinery, and surplus material from Project site.
e. Remove snow and ice to provide safe access to building.
f. Clean exposed exterior and interior hard-surfaced finishes to dirt-free condition, free of stains, films, and foreign substances. Avoid disturbing natural weathering of exterior surfaces. Restore reflective surfaces to original condition.
g. Remove labels that are not permanent.
h. Touch up, repair, and restore marred, exposed finishes and surfaces. Replace finishes and surfaces that cannot be satisfactorily repaired or restored or that already show evidence of repair or restoration.

1) Do not paint over "UL" (Underwriters Laboratories) and similar labels, including mechanical and electrical nameplates.
i. Replace parts subject to unusual operating conditions.
j. Leave Project clean and ready for occupancy.

C. Pest Control: Engage experienced, licensed exterminator to make a final inspection and rid project of rodents, insects, and other pests. Provide Government with report.

D. Waste Disposal: Comply with requirements of Section 01 74 19 "Construction Waste Management and Disposal."

END OF SECTION 01 77 00

Closeout and Operation & Maintenance (O&M) Requirements: **GOGA 244458**

National Park Service (NPS) - Denver Service Center (DSC) | 1-27-21

Topic	Specification Section	Requirement	Submittal Date	Completed	Received by Park
Project Record Drawings	01 77 00	Final Project Record Drawings.			
System Demonstration and Training					
Tools Spare Parts Equipment					
Extra Stock					
	32 14 00	Any excess salvaged stone pavers			
Reports					
	31 13 20	Accessibility inspection report			
Keys & Keying Schedule					
O&M Data Warranties Guarantees					

Closeout and Operation & Maintenance (O&M) Requirements: **FOPO 186401**

National Park Service (NPS) - Denver Service Center (DSC) | 1-27-21

Topic	Specification Section	Requirement	Submittal Date	Completed	Received by Park
Project Record Drawings	017700	Project record drawings			
System Demonstration and Training					
Tools Spare Parts Equipment	323100	Sign mounting hardware tightening keys/tools			
Extra Stock					
Reports	017700	Substantial completion and final inspection report			
	017700	Final acceptance of work			
	321723	Traffic stripes and pavement markings			
Keys & Keying Schedule					
O&M Data Warranties Guarantees	017700	Closeout submittals			
	017700	Warranties			
	323100	Access control gate O&M data and warranty			
	323100	Key-pad support arm/pedestal O&M data and warranty			
	323100	Plastic bollard O&M data and warranty			
	323100	Metal bollard O&M data and warranty			
	323100	Wheel stop warranty			
	323100	Sign post and panel warrranty			
	323113	Chainlink fencing O&M data and warranty			
	347113	Guardrail O&M data and warranty			