PANTHEON SALOON/RED FRONT BUILDINGS ROOF RECOVER - EXHIBIT A SELECT 1997 RESTORATION DRAWINGS **FOR REFERENCE ONLY NOT FOR CONSTRUCTION**

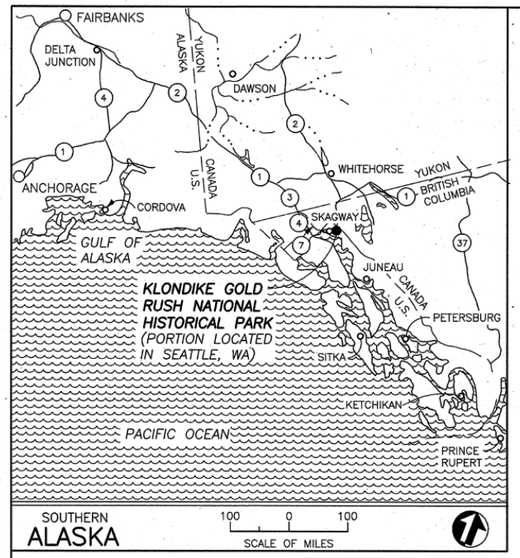


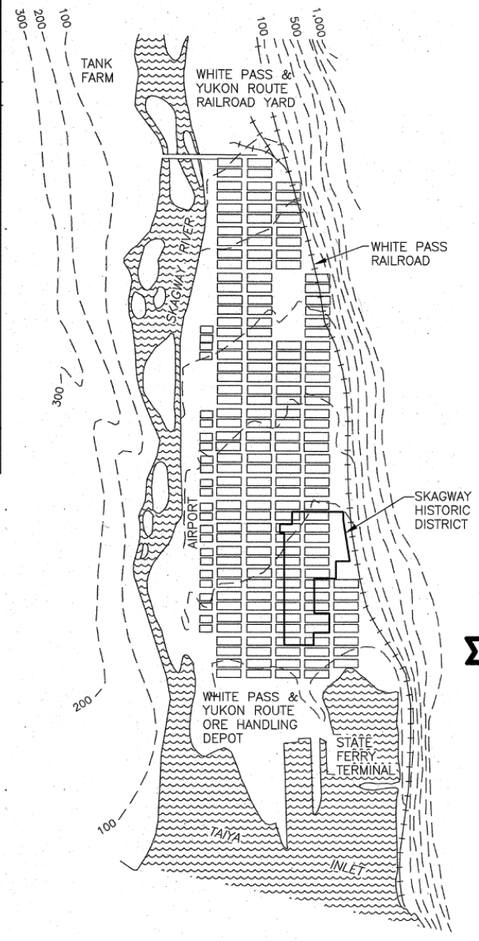


SKAGWAY AND VICINITY

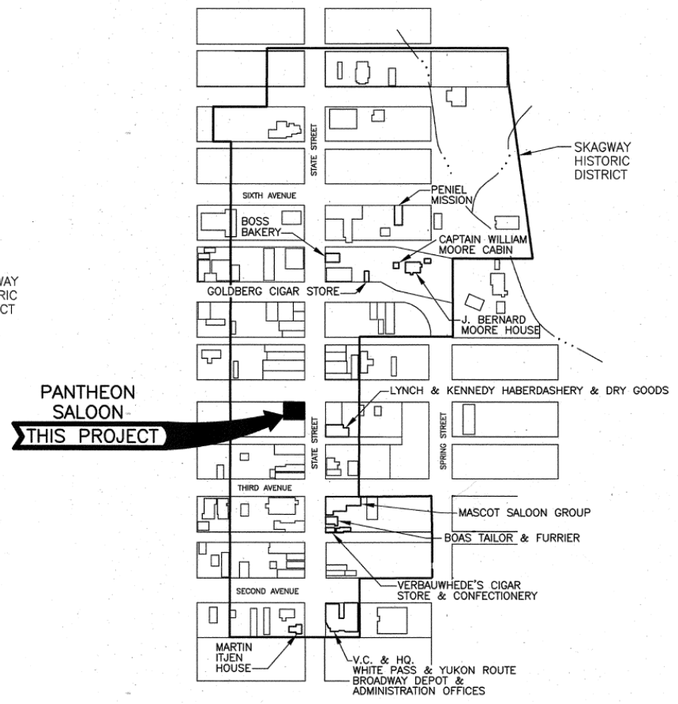


SKAGWAY HISTORIC DISTRICT

## INDEX


| SHEET | SUB SHEET | TITLE OF SHEET |
|---|---|---|
| | | GENERAL |
| 1 | | COVER SHEET |
| | | ARCHITECTURAL |
| 2 | A1 | SITE PLANS |
| 3 | A2 | FIRST FLOOR PLANS |
| 4 | A3 | SECOND FLOOR PLANS |
| 5 | A4 | ROOF PLANS |
| 6 | A5 | EAST ELEVATIONS |
| 7 | A6 | NORTH ELEVATIONS |
| 8 | A7 | WEST ELEVATIONS |
| 9 | A8 | SOUTH ELEVATIONS |
| 10 | A9 | SITE DETAILS |
| 11 | A10 | LONG. AND TRANS. SECTIONS |
| 12 | A11 | WALL SECTIONS AND DETAILS |
| 13 | A12 | ANNEX STOREFRONT |
| 14 | A13 | STAIR DETAILS |
| 15 | A14 | ELEVATOR DETAILS |
| 16 | A15 | DOOR SCHEDULE |
| 17 | A16 | WINDOW SCHEDULE |
| 18 | A17 | BATHROOM ELEVATION AND INTERIOR ISOMETRIC |
| 19 | A18 | CHIMNEY DETAILS |
| 20 | A19 | FLASHING DETAILS |
| | | STRUCTURAL |
| 21 | S1 | FOUNDATION PLAN AND GENERAL NOTES |
| 22 | S2 | 1ST FLOOR FRAMING PLAN, SECTION AND DETAILS |
| 23 | S3 | 2ND FLOOR FRAMING PLAN, SECTION AND DETAILS |
| 24 | S4 | ROOF FRAMING PLAN |
| 25 | S5 | SECTIONS AND DETAILS |
| 26 | S6 | SECTIONS AND DETAILS |
| | | SITE UTILITIES |
| 27 | U1 | CIVIL AND ELECTRICAL SITE PLANS |
| | | MECHANICAL |
| 28 | M1 | MECHANICAL LEGEND AND EQUIPMENT SCHEDULE |
| 29 | M2 | CRAWL SPACE AND FIRST FLOOR HVAC PLAN |
| 30 | M3 | SECOND FLOOR HVAC PLAN |
| 31 | M4 | MECHANICAL PIPING AND CONTROL SCHEMATICS |
| | | PLUMBING |
| 32 | P1 | FIRST AND SECOND FLOOR PLUMBING PLANS |
| 33 | P2 | PLUMBING DETAILS AND ISOMETRIC |
| | | ELECTRICAL |
| 34 | E1 | PANELBOARDS AND LEGEND |
| 35 | E2 | CRAWL SPACE AND FIRST FLOOR ELECTRICAL PLANS |
| 36 | E3 | ELECTRICAL RISER DIAGRAM AND SECOND FLOOR ELECTRICAL PLAN |


# KLONDIKE GOLD RUSH NATIONAL HISTORICAL PARK

## ADAPTIVE RESTORATION PANTHEON SALOON (DAY LABOR)

| Mark | Sheet | REVISION | Date | Initial |
|---|---|---|---|---|
| | | | | |

QUALITY DESIGN CERTIFICATION
- ☑ Prepared in Accordance with Preliminary Design (Title I) 461/25,042 Drawing No.
  OR
- ☐ Variance from Preliminary Design (Title I) Approved by Superintendent on ____ Date
  OR
- ☐ Construction Drawing Not Preceded by Preliminary Design (Title I)

Project Manager — 9/5/97 Date

CONSTRUCTION DRAWINGS

UNITED STATES
DEPARTMENT OF THE INTERIOR

NATIONAL PARK SERVICE
DENVER SERVICE CENTER

TITLE OF DRAWING
ADAPTIVE RESTORATION
PANTHEON SALOON
LOCATION WITHIN PARK
SKAGWAY HISTORIC DISTRICT
NAME OF PARK
KLONDIKE GOLD RUSH N.H.P.
REGION ALASKA | DISTRICT SOUTHEAST | STATE ALASKA

DRAWING NO. 461 25,042
PKG. NO. 114H
SHEET 1 of 36

BASIC DATA: 461/25,014C (2/93) COVER SHEET REVISED & REDRAWN 1/97.SGS.

9/4/97 17:05 R.CONRAD P:\KLGO\114H\DAYLABOR\01-COVER

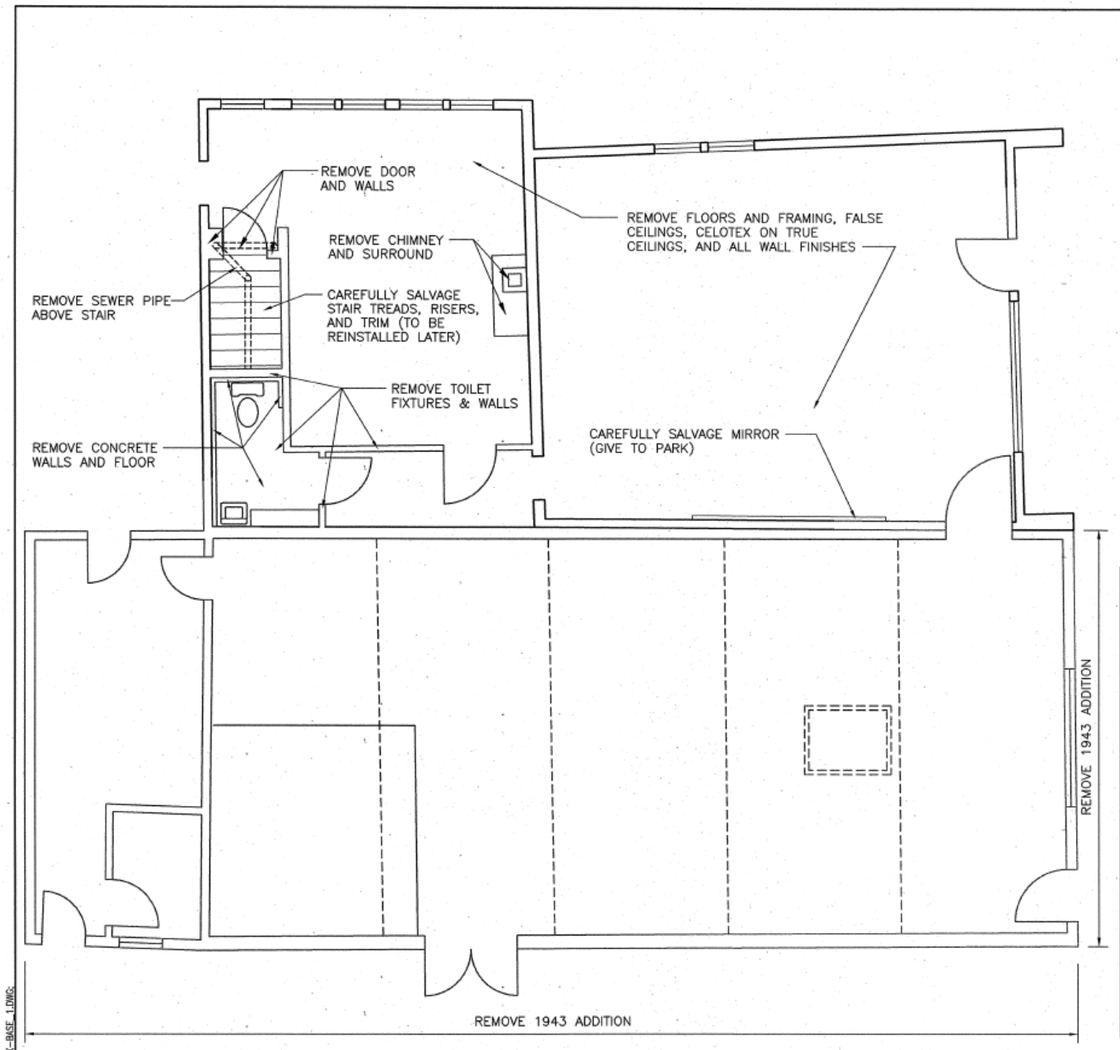


A/A2 EXISTING FIRST FLOOR DEMO PLAN
SCALE A

SCALE A 4 0 4 8
SCALE IN FEET
1/4" = 1'-0"

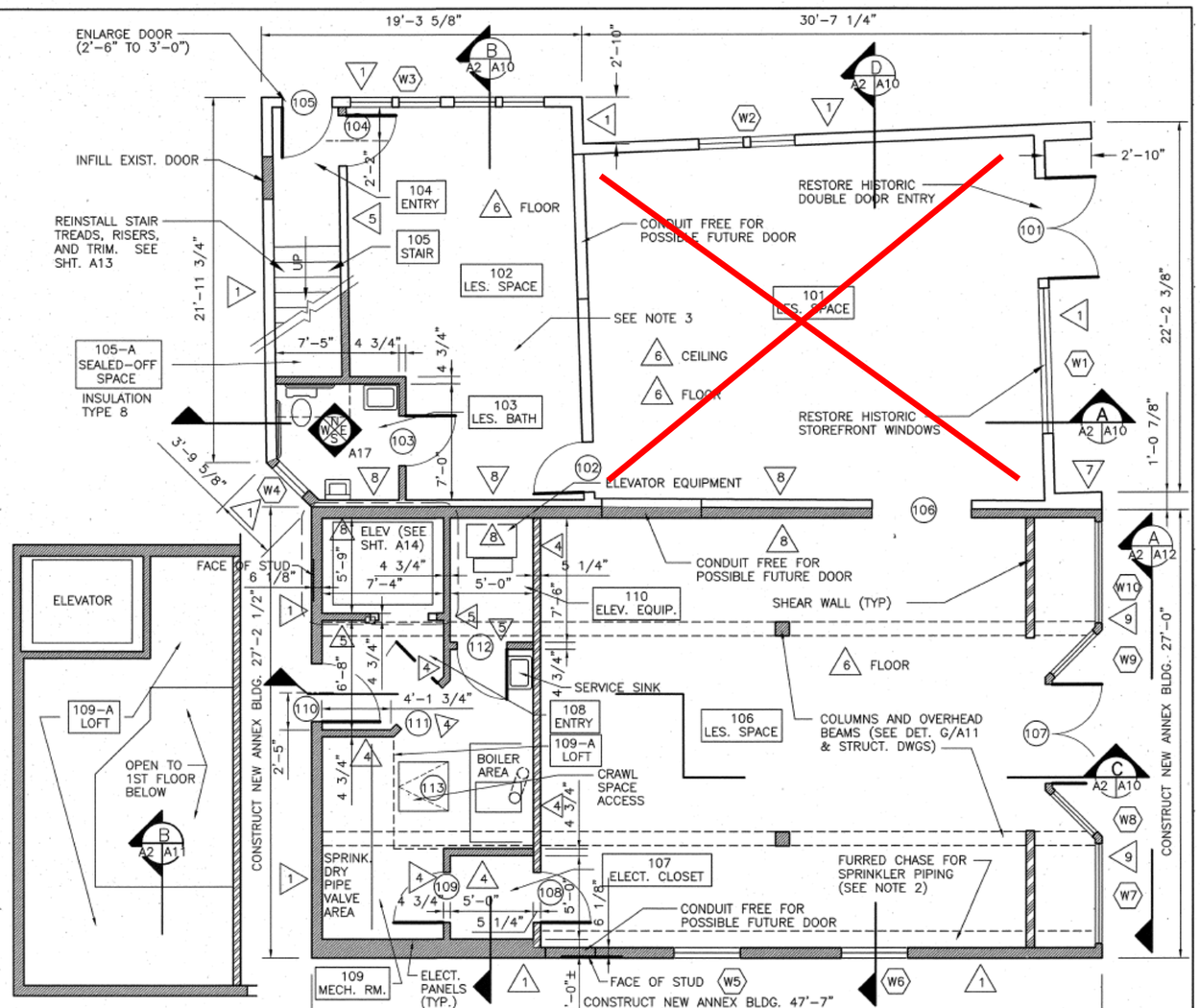


C/A2 LOFT FLOOR PLAN
SCALE A

B/A2 NEW FIRST FLOOR PLAN
SCALE A

## 1ST. FLOOR FINISH INDEX

| | | | | | |
|---|---|---|---|---|---|
| FLOOR | A | NEW T&G PLYWOOD | WAIN. | | |
| | B | SHEET VINYL | | | |
| | | | | | |
| | D | PAINT | | | |
| | E | 5/8" TYPE X GYP BD. | WALL | Q | 5/8" TYPE X GYP BD. |
| | | | | R | PAINT |
| | | | | S | EXPOSED STUDS |
| | | | | | |
| BASE | H | WOOD (TYPE A) | | | |
| | I | WOOD (TYPE B) | CEIL. | V | 5/8" TYPE X GYP BD. |
| | J | WOOD (STAIR TRIM) | | W | PAINT |
| | K | VINYL | | | |

## 1ST. FLOOR ROOM FINISH SCHEDULE

| ROOMS | | FLRS | BASE | WAINSCOT | | WALLS | | | | CEILINGS | | REMARKS |
|---|---|---|---|---|---|---|---|---|---|---|---|---|
| NO. | NAME | | | MAT'L | HEIGHT | NORTH | EAST | SOUTH | WEST | MAT'L | HEIGHT | |
| 101 | LESSEE SPACE | A | I | | | Q* | Q* | Q* | Q* | V* | 10'-9" | * FIRE TAPE |
| 102 | LESSEE SPACE | A | I | | | Q* | Q* | Q* | Q* | V* | 12'-0" | * FIRE TAPE |
| 103 | LESSEE BATHROOM | B | K | | | Q, R | Q, R | Q, R | Q, R | V, W | 7'-0" | |
| 104 | COMMON ENTRY | B | J | | | Q, R | Q, R | Q, R | Q, R | V, W | 12'-0" | |
| 105 | STAIR | D | J | | | Q, R | Q, R | Q, R | Q, R | V, W | VARIES | SEE SHEET A13 |
| 105A | SEALED-OFF SPACE | A | | | | S | S | S | S | V | VARIES | FILL WITH INSULATION |
| 106 | LESSEE SPACE | A | I | | | Q* | Q* | Q* | Q* | V* | 12'-0" | * FIRE TAPE |
| 107 | ELECTRICAL CLOSET | B | H | | | Q, R | Q, R | Q, R | Q, R | V, W | 7'-6" | |
| 108 | NPS ENTRY | B | H | | | Q, R | Q, R | Q, R | Q, R | V, W | 7'-6" | |
| 109 | MECHANICAL ROOM | B | H | | | Q, R | Q, R | Q, R | Q, R | V, W | 12'-0" | |
| 109A | STORAGE LOFT | A, D | H | | | Q, R | Q, R | Q, R | Q, R | V, W | 4'-0" | |
| 110 | ELEV. EQUIP. ROOM | B | H | | | Q, R | Q, R | Q, R | Q, R | V, W | 7'-6" | |

## SHEET LEGEND

- DEMOLITION
- NEW WORK
- NEW – 3 1/2" STUD, 1/2" SHEATHING ON EAST FACE (SEE NOTE 4)
- NEW – 3 1/2" STUD, 1/2" SHEATHING ON BOTH FACES (SEE NOTE 4)

## INSULATION, VAPOR & AIR RETARDER KEY

1. 5-1/2" BATT, V.R, A.R.
2. 5-1/2" BATT, V.R.
3. 5-1/2" BATT
4. 3-1/2" BATT, V.R.
5. 3-1/2" BATT
6. 12" BATT, V.R.
7. COMPLETELY FILL, V.R.
8. COMPLETELY FILL
9. COMPLETELY FILL, V.R, A.R.

GENERAL NOTES:

1. FURR-OUT EXT. WALLS OF HISTORIC PANTHEON BUILDING TO 5-1/2" STUD DEPTH TO ALLOW FOR 6" R-21 INSUL.
2. COORDINATE CHASE CONSTRUCTION WITH SPRINKLER CONTRACTOR.
3. SEE SHEET A17 FOR INT. ISOMETRIC.
4. SEE DETAIL F, SHEET A11 FOR SHEAR WALLS.
5. INTERIOR WALL DIMENSIONS ARE TO GYP BOARD FINISH SURFACE UNLESS OTHERWISE NOTED.
6. 1ST FL. FINISH ELEVATION 100'-0" TO BE DETERMINED IN FIELD.

| | |
|---|---|
| DESIGNED: | R. CONRAD |
| DRAWN: | R. CONRAD |
| TECH. REVIEW: | R. CONRAD |
| DATE: | 9/97 |

SUB SHEET NO. A2

TITLE OF SHEET
FIRST FLOOR PLANS
EXISTING & NEW
PANTHEON SALOON
KLONDIKE GOLD RUSH N.H.P.

DRAWING NO. 461 25,042
PKG. NO. 114H
SHEET 3 OF 36

9/4/97 17:21 R.CONRAD P:\KLGO\114H\DAYLABORK\03-A-1FL_XREFS: P:\KLGO\114H\BASEV.C-BASE_1.DWG;

PANTHEON SALOON/RED FRONT BUILDINGS ROOF RECOVER - EXHIBIT A SELECT 1997 RESTORATION DRAWINGS **FOR REFERENCE ONLY NOT FOR CONSTRUCTION**

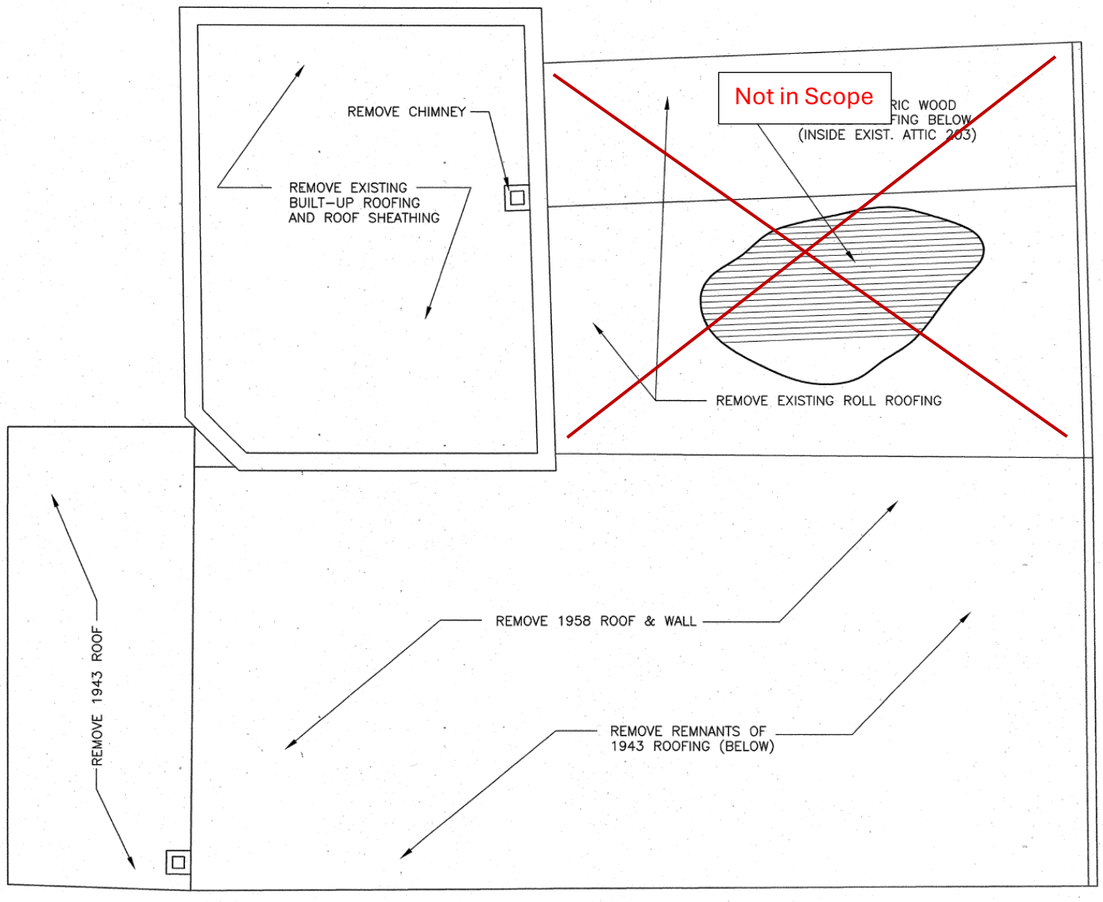


A EXISTING ROOF DEMO PLAN
SCALE A

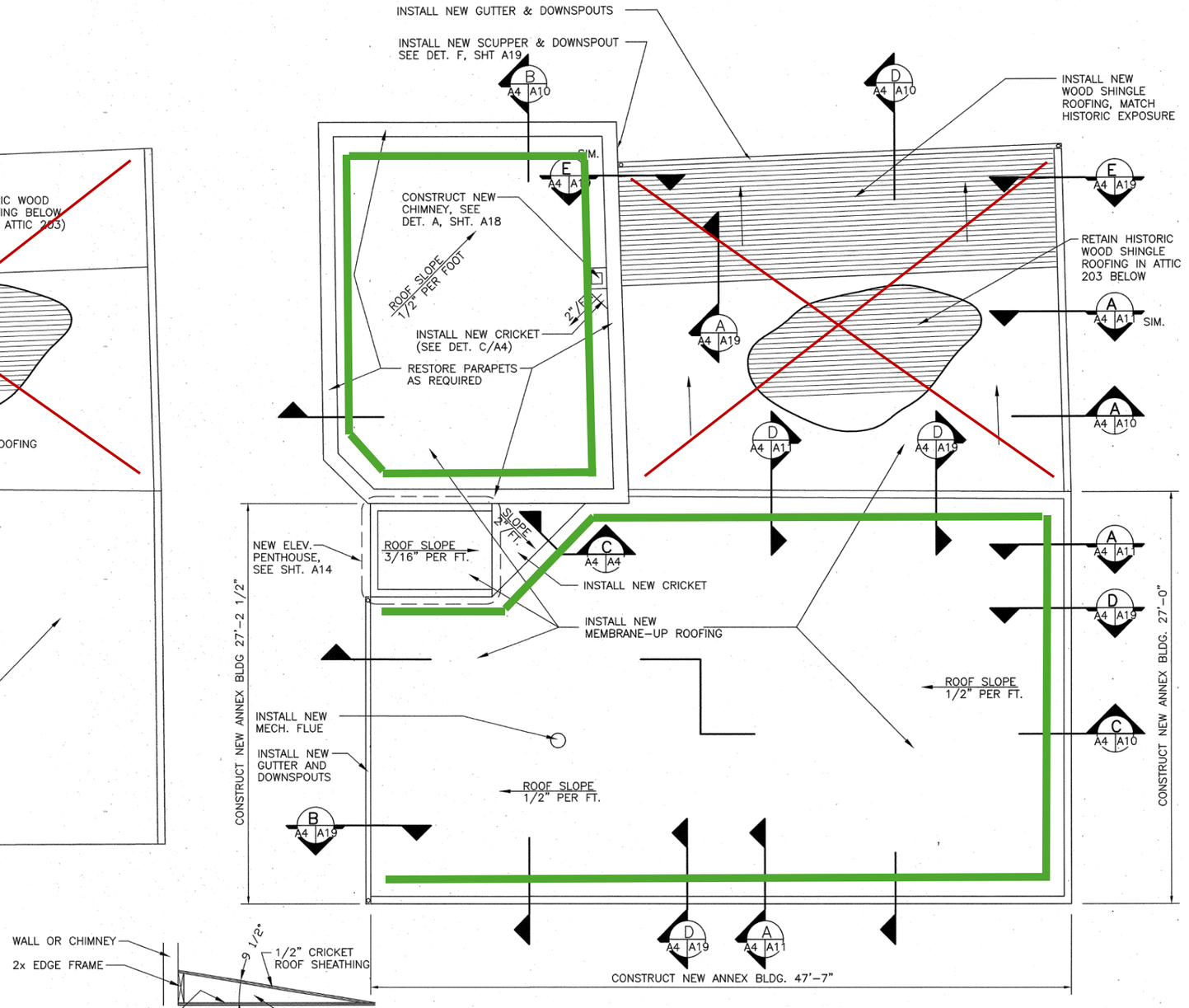


B NEW ROOF PLAN
SCALE A

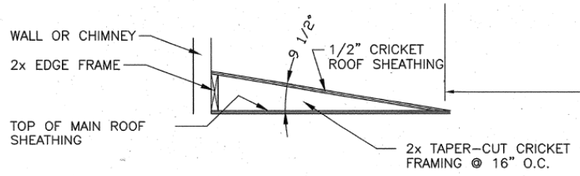


C CRICKET FRAMING
SCALE B

SHEET LEGEND
DEMOLITION

SCALE (B) 1 0 1 2 3
SCALE IN FEET
3/4" = 1'-0"

SCALE (A) 4 0 4 8
SCALE IN FEET
1/4" = 1'-0"

| | | | |
|---|---|---|---|
| DESIGNED: R. CONRAD<br>DRAWN: R. CONRAD<br>TECH. REVIEW: R. CONRAD<br>DATE: 9/97 | SUB SHEET NO. A4 | TITLE OF SHEET<br>ROOF PLANS<br>EXISTING & NEW<br>PANTHEON SALOON<br>KLONDIKE GOLD RUSH N.H.P. | DRAWING NO. 461<br>25,042<br>PKG. NO. 114H<br>SHEET 5<br>OF 36 |

9/4/97 1:/223 MCSORAS/114H/ARTI/ARCH/SD-ANNEX.DWG

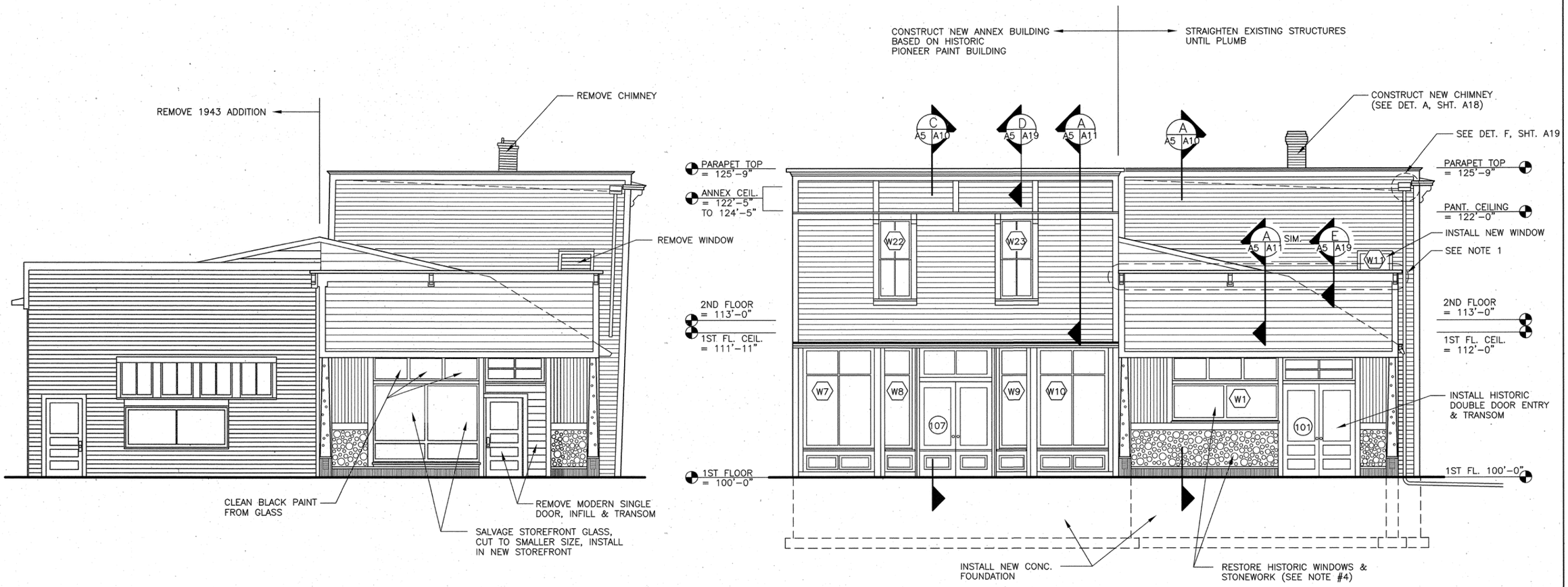


A A5 A5 EXISTING EAST ELEVATION
SCALE A

B A5 A5 NEW EAST ELEVATION
SCALE A

SHEET LEGEND

DEMOLITION

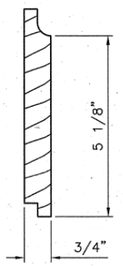


C A5 A5 ANNEX SIDING PROFILE
SCALE B

GENERAL NOTES:

1. REHABILITATE CORNICE AND BRACKETS (TYP).
2. SEE SHEET A12 FOR ANNEX STOREFRONT DETAILS.
3. REMOVE ALL SIDING FROM EXISTING BUILDING, STRAIGHTEN & PLUMB STRUCTURE, INSTALL NEW WALL SHEATHING & AIR BARRIER, REINSTALL SIDING.
4. SALVAGE HISTORIC STONEWORK AND DECORATIVE WOOD TRIM. DURING WALL REHABILITATION, REINSTALL STONES ADDING NEW STONES SALVAGED FROM CRAWL SPACE EXCAVATION AS REQUIRED. REINSTALL DECORATIVE WOOD TRIM.

SCALE (B) 2 0 2 4
SCALE IN INCHES
HALF SIZE

SCALE (A) 4 0 4 8
SCALE IN FEET
1/4" = 1'-0"

| | | | |
|---|---|---|---|
| DESIGNED: R. CONRAD | SUB SHEET NO. A5 | TITLE OF SHEET: EAST ELEVATIONS EXISTING & NEW PANTHEON SALOON, KLONDIKE GOLD RUSH N.H.P. | DRAWING NO. 461 25,042 |
| DRAWN: R. CONRAD | | | PKG. NO. 114H |
| TECH. REVIEW: R. CONRAD | | | SHEET 6 OF 36 |
| DATE: 9/97 | | | |

9/4/97 17:24 R:\CONRAD P:\KLGD\114H\DWT\ABSR\06-AE-EL

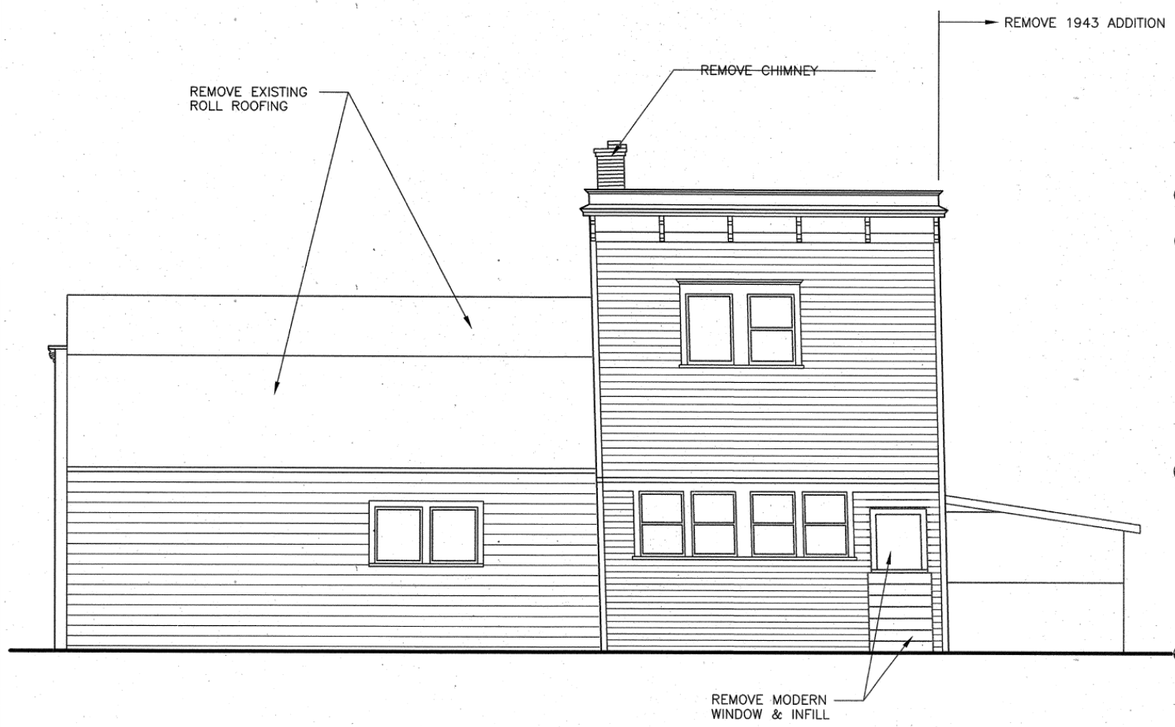


A EXISTING NORTH ELEVATION
A6 A6
SCALE A

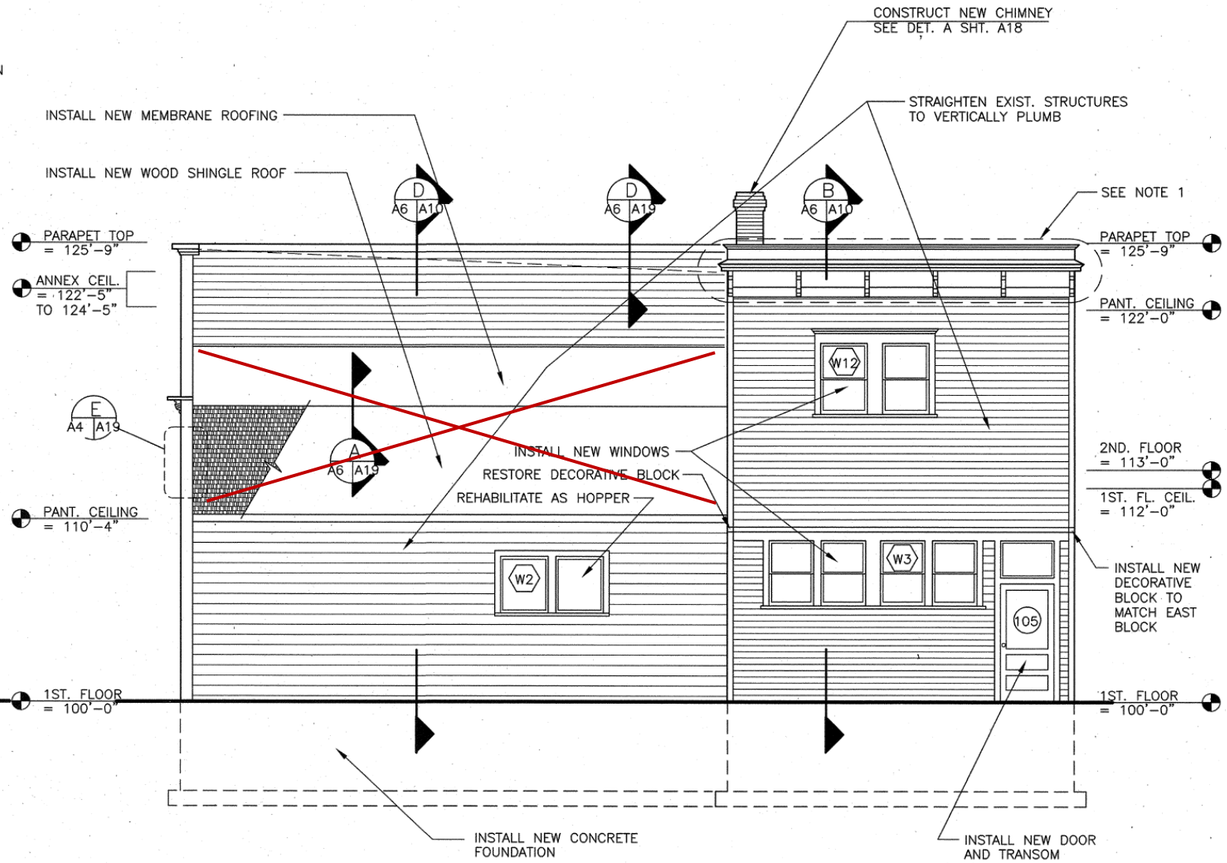


B NEW NORTH ELEVATION
A6 A6
SCALE A

SHEET LEGEND

DEMOLITION

GENERAL NOTES:

1. REHABILITATE CORNICE AND BRACKETS (TYP).
2. REMOVE ALL SIDING FROM EXISTING BUILDING, STRAIGHTEN & PLUMB STRUCTURE, INSTALL NEW WALL SHEATHING & AIR BARRIER, REINSTALL SIDING.

SCALE A 4 0 4 8
SCALE IN FEET
1/4" = 1'-0"

| | | | |
|---|---|---|---|
| DESIGNED: R. CONRAD<br>CADD R. CONRAD<br>TECH. REVIEW: R. CONRAD<br>DATE: 9/97 | SUB SHEET NO. A6 | TITLE OF SHEET<br>NORTH ELEVATIONS EXISTING & NEW<br>PANTHEON SALOON<br>KLONDIKE GOLD RUSH N.H.P. | DRAWING NO. 461 25,042<br>PKG. NO. 114H<br>SHEET 7 OF 36 |

9/4/97 17:25 R:\CONRAD P:\KLGO\114H\DATA\ABOR\07-AN-EL

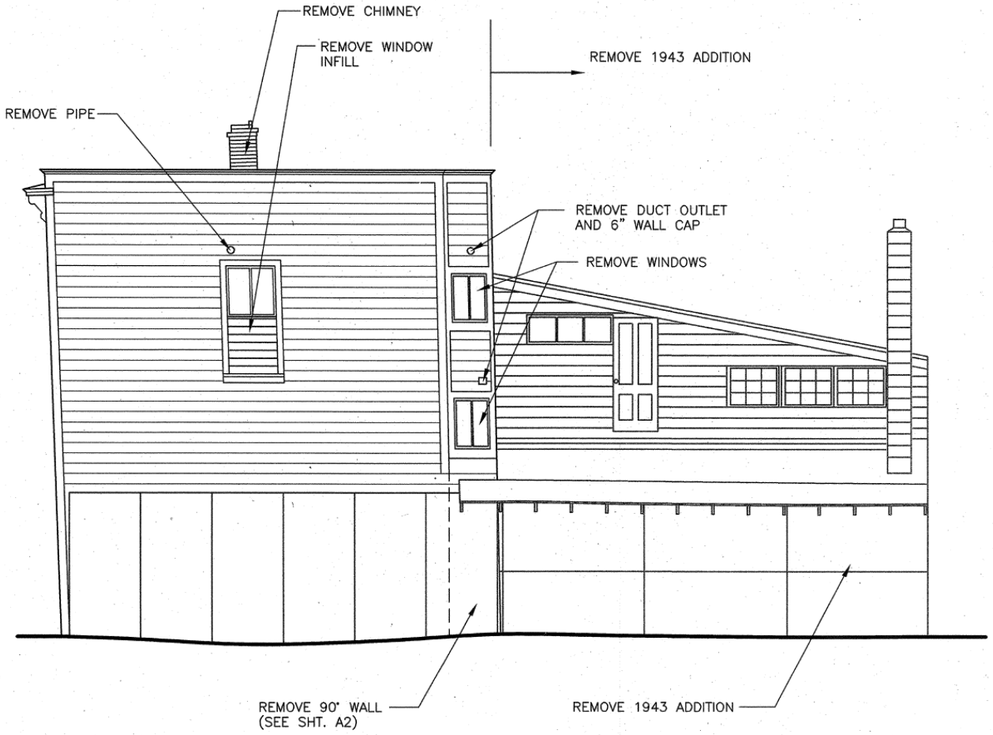


A7 A7 EXISTING WEST ELEVATION
SCALE A

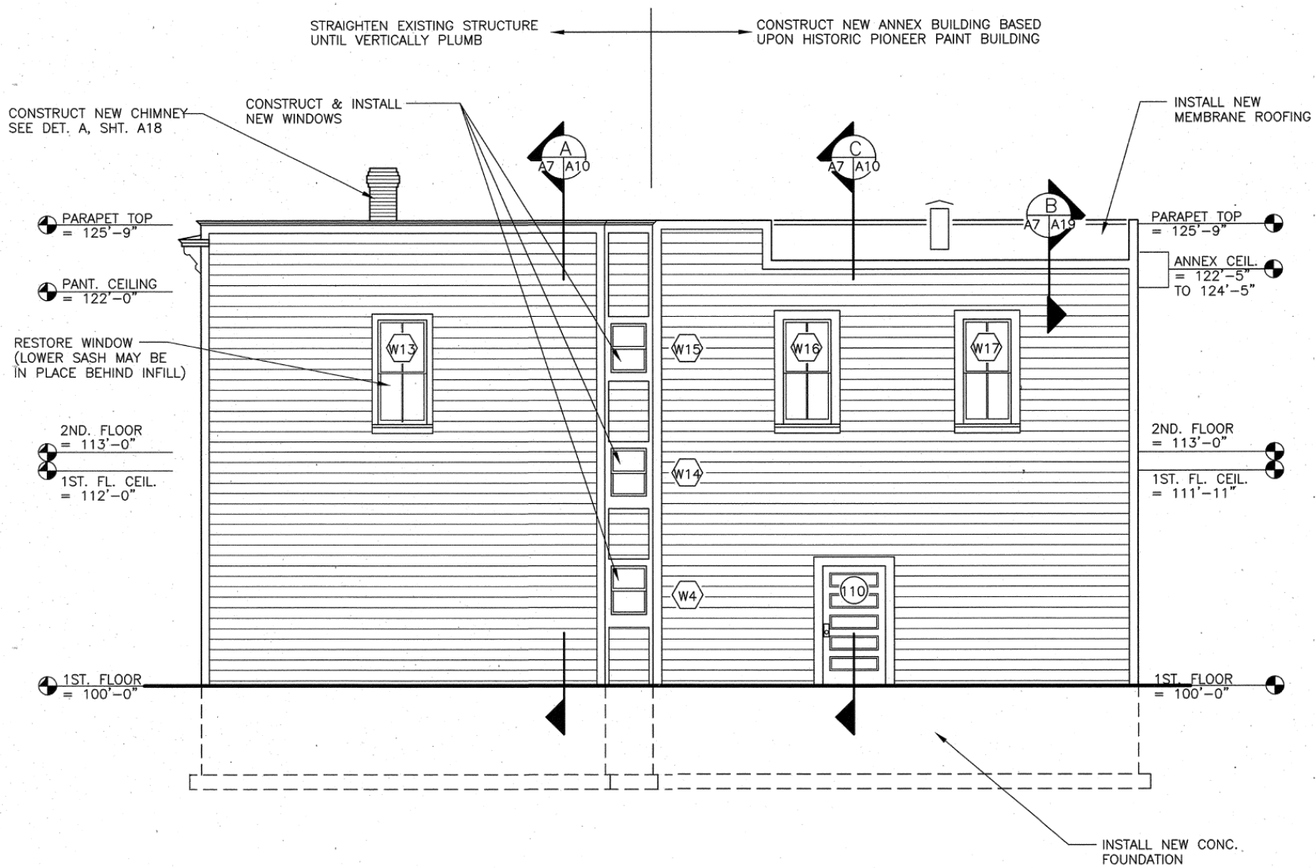


B A7 A7 NEW WEST ELEVATION
SCALE A

SHEET LEGEND

DEMOLITION

GENERAL NOTES:

1. REMOVE ALL SIDING FROM EXISTING BUILDING, STRAIGHTEN & PLUMB STRUCTURE, INSTALL NEW WALL SHEATHING & AIR BARRIER, REINSTALL SIDING.

SCALE A 4 0 4 8
SCALE IN FEET
1/4" = 1'-0"

| | | | |
|---|---|---|---|
| DESIGNED: R. CONRAD | SUB SHEET NO. A7 | TITLE OF SHEET: WEST ELEVATIONS EXISTING & NEW PANTHEON SALOON<br>KLONDIKE GOLD RUSH N.H.P. | DRAWING NO. 461 25,042 |
| CADD R. CONRAD | | | PKG. NO. 114H |
| TECH. REVIEW: R. CONRAD | | | SHEET 8 OF 36 |
| DATE: 9/97 | | | |

9/4/97 17:35 R.CONRAD P:\KLGOLD\114H\DWG\ARCH\08-AW-EL

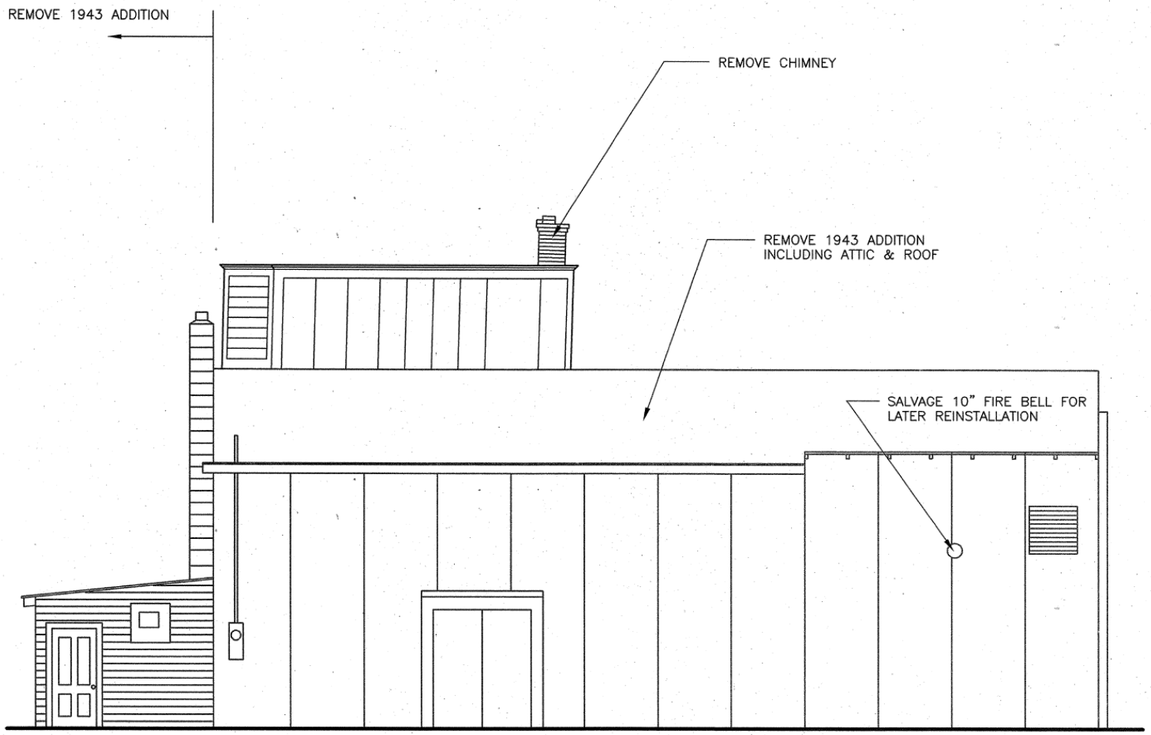


A8 A8 A — EXISTING SOUTH ELEVATION

SCALE A

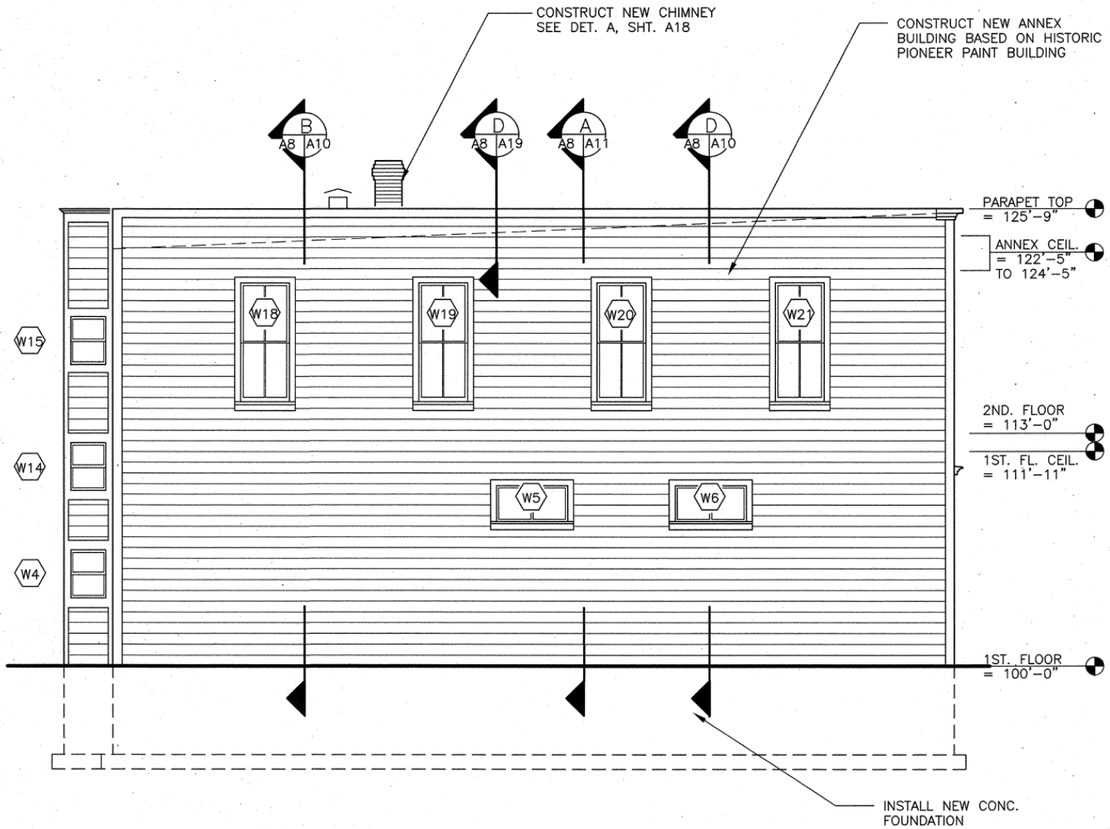


A8 A8 B — NEW SOUTH ELEVATION

SCALE A

SHEET LEGEND

DEMOLITION

SCALE A — 4 0 4 8 — SCALE IN FEET — 1/4" = 1'-0"

| | | | |
|---|---|---|---|
| DESIGNED: R. CONRAD<br>DRAWN: R. CONRAD<br>TECH. REVIEW: R. CONRAD<br>DATE: 9/97 | SUB SHEET NO. A8 | TITLE OF SHEET<br>SOUTH ELEVATIONS EXISTING & NEW PANTHEON SALOON<br>KLONDIKE GOLD RUSH N.H.P. | DRAWING NO. 461 25,042<br>PKG. NO. 114H<br>SHEET 9 OF 36 |

9/4/97 17:36 R:\CONRAD P:\KLGO\114H\DWG\ARCH\09-AS-EL

PANTHEON SALOON/RED FRONT BUILDINGS ROOF RECOVER - EXHIBIT A SELECT 1997 RESTORATION DRAWINGS **FOR REFERENCE ONLY NOT FOR CONSTRUCTION**

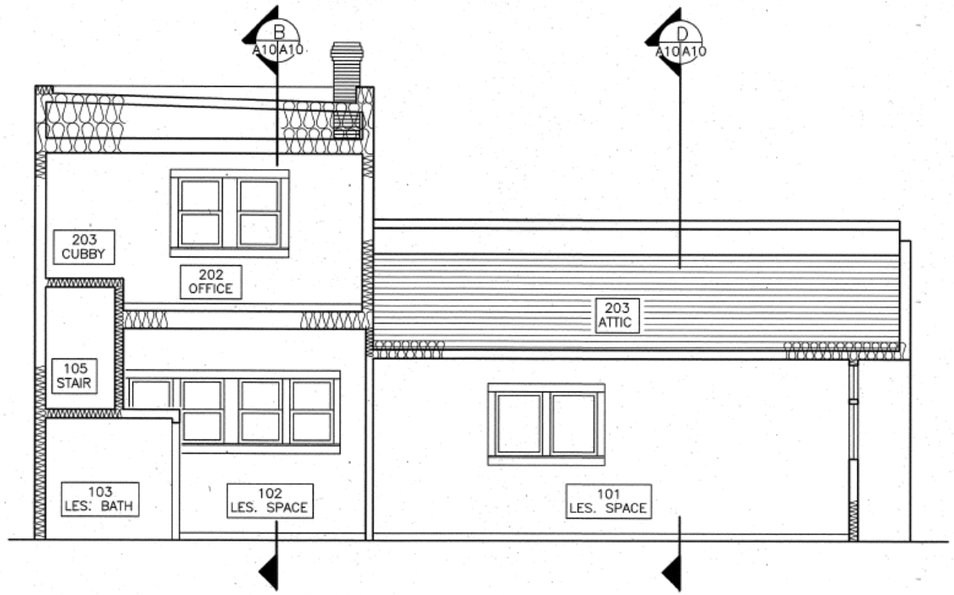


A A10 LONGITUDINAL SECTION
A2 A3 A4 A5 A7
SCALE A

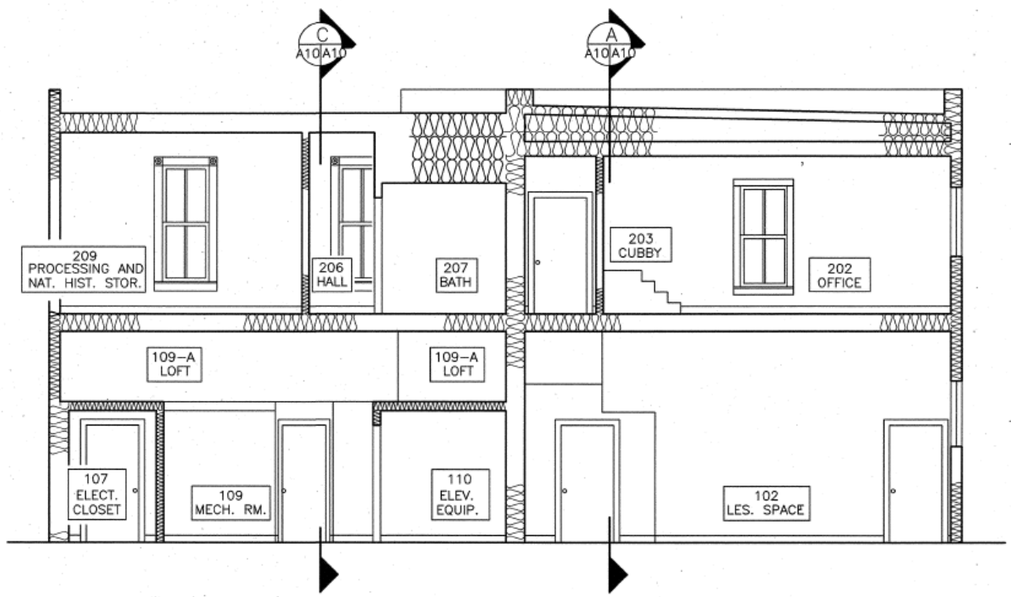


B A10 TRANSVERSE SECTION
A2 A3 A4 A6 A8
SCALE A

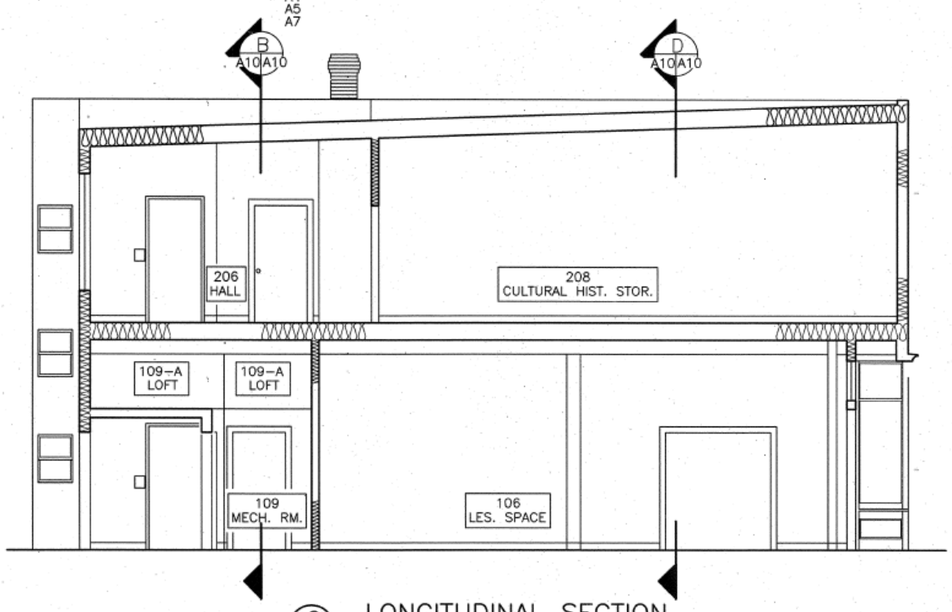


C A10 LONGITUDINAL SECTION
A2 A3 A4 A5 A7
SCALE A

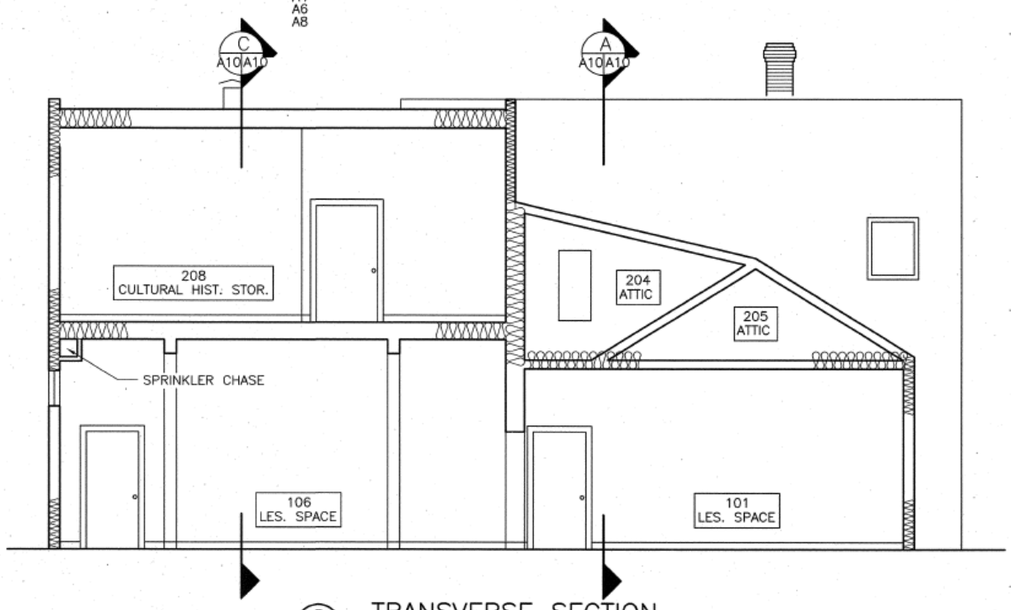


D A10 TRANSVERSE SECTION
A2 A3 A4 A6 A8
SCALE A

SCALE (A) 4 0 4 8
SCALE OF FEET
1/4" = 1'-0"

| DESIGNED: R. CONRAD | SUB SHEET NO. | TITLE OF SHEET | DRAWING NO. 461 25,042 |
|---|---|---|---|
| CADD R. CONRAD | A10 | LONGITUDINAL AND TRANSVERSE SECTIONS PANTHEON SALOON | PKG. NO. 114H |
| TECH. REVIEW: R. CONRAD | | KLONDIKE GOLD RUSH N.H.P. | SHEET 11 OF 36 |
| DATE: 9/97 | | | |

9/4/97 17:39 R.CONRAD P:\KLGO\114H\DAYLABOR\11-ABSEC

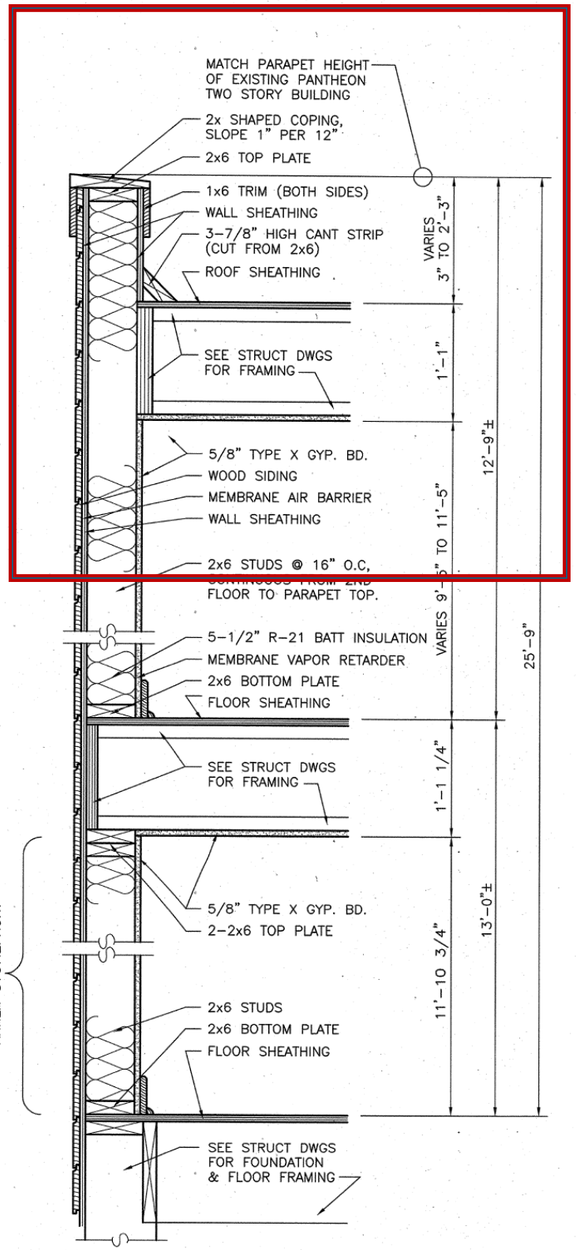


A / A4 A5 A8 / A11 — EXTERIOR WALL SECTION
SCALE A

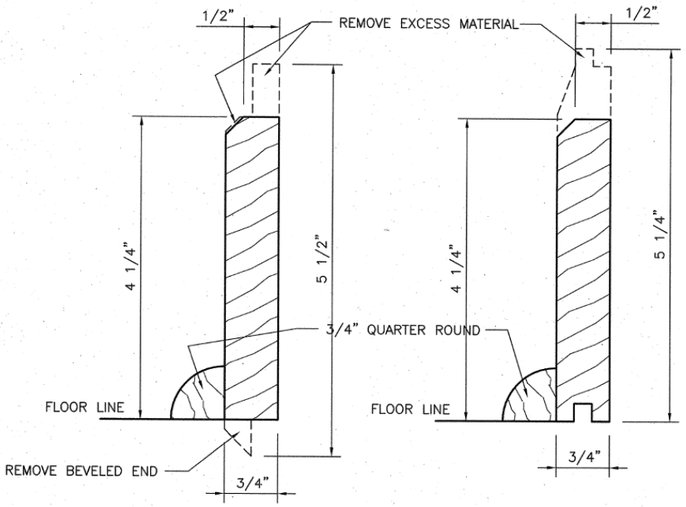


UNLABELED SIDING
83 ± PIECES
1500± LIN. FT.

NOTE: BOTH SIDING SHAPES ARE CURRENTLY STORED AT THE DUPLEX SITE GARAGE

LABELED BOAS SIDING
19 ± PIECES
270± LIN. FT.

C / A4 A11 — BASE MOLD
SCALE B

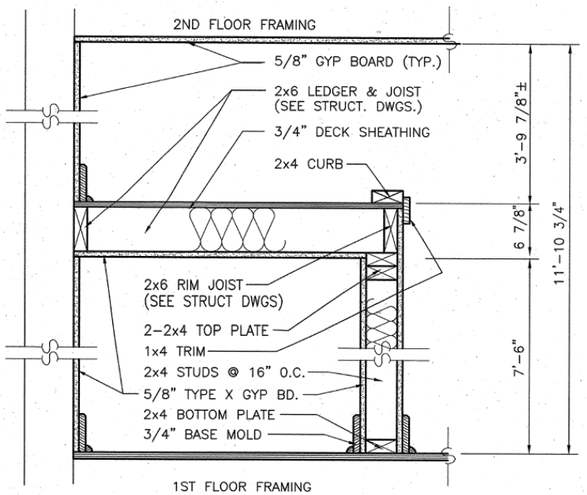


B / A2 A11 — LOFT SECTION
SCALE A

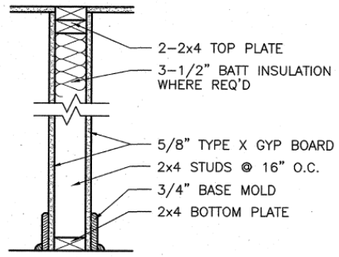


E / A11 A11 — TYP. INTERIOR WALL SECTION
SCALE A

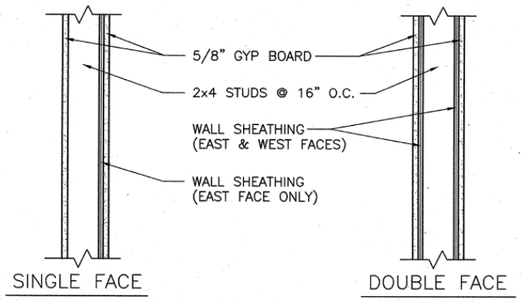


F / A2 A3 / A11 — INTERIOR SHEAR WALLS
SCALE A

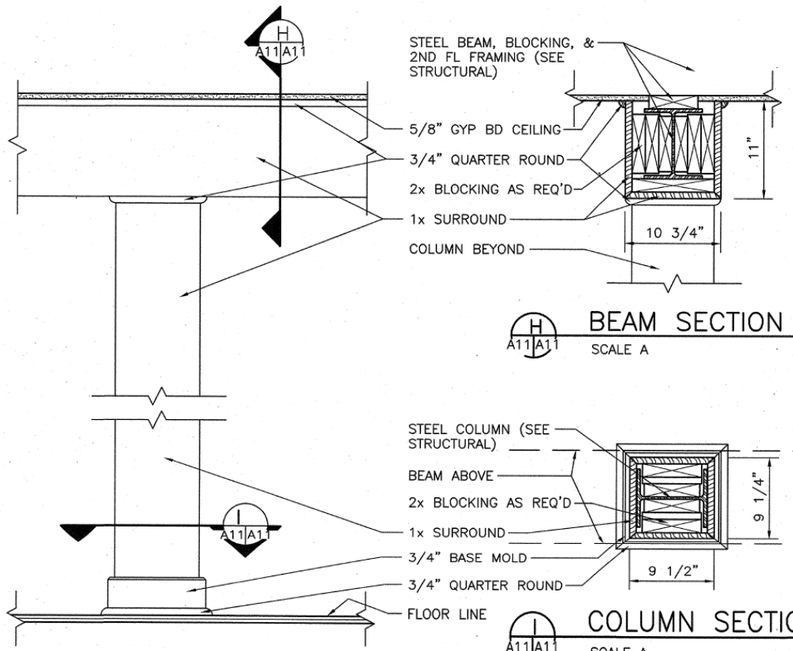


H / A11 A11 — BEAM SECTION
SCALE A

I / A11 A11 — COLUMN SECTION
SCALE A

G / A2 A11 — BEAM/COLUMN ELEVATION
SCALE A

D / A4 A11 — NOT USED
SCALE B

SCALE (B) 1 0 1 2
SCALE OF INCHES
FULL SIZE

SCALE (A) 12 6 0 12
SCALE OF INCHES
1-1/2" = 1'-0"

| | | | |
|---|---|---|---|
| DESIGNED: R. CONRAD | SUB SHEET NO. A11 | TITLE OF SHEET: TYPICAL WALL SECTIONS AND DETAILS PANTHEON SALOON | DRAWING NO. 461 25,042 |
| CADD: R. CONRAD | | KLONDIKE GOLD RUSH N.H.P. | PKG. NO. 114H |
| TECH. REVIEW: R. CONRAD | | | SHEET 12 OF 36 |
| DATE: 9/97 | | | |

9/4/97 17:40 R.CONRAD P:\KLGOLD\114H\DWG\ARCH\A11-ANNSEC

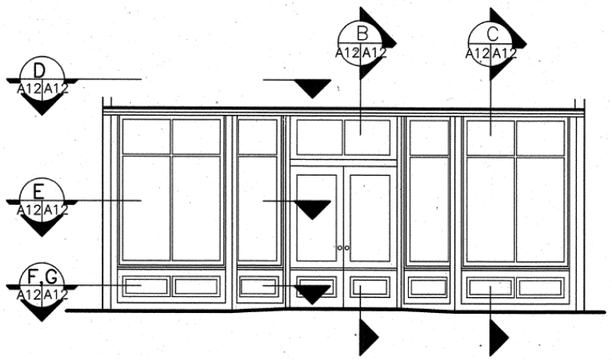


A A2 A12 A5 A11 ANNEX STOREFRONT ELEVATION
SCALE A

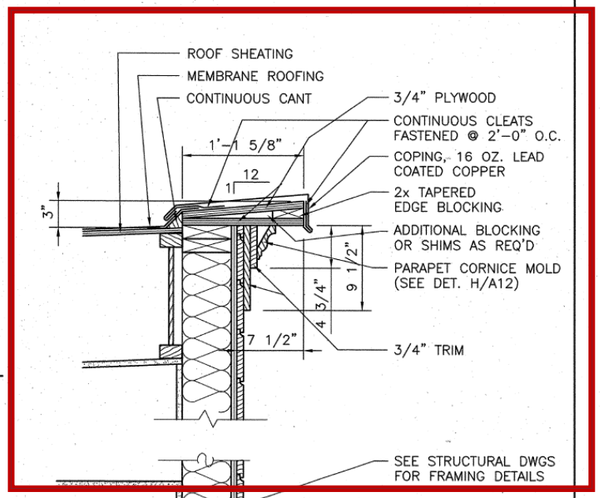


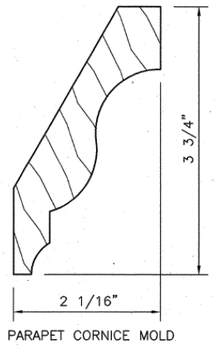


PARAPET CORNICE MOLD

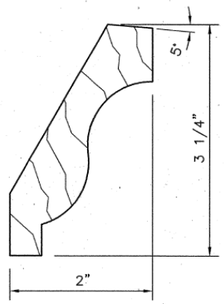


CORNICE MOLD CURRENTLY AT DUPLEX SITE GARAGE




PANEL MOLD BOSS TYPE B

H A12 A12 MOLDING PROFILES
SCALE D

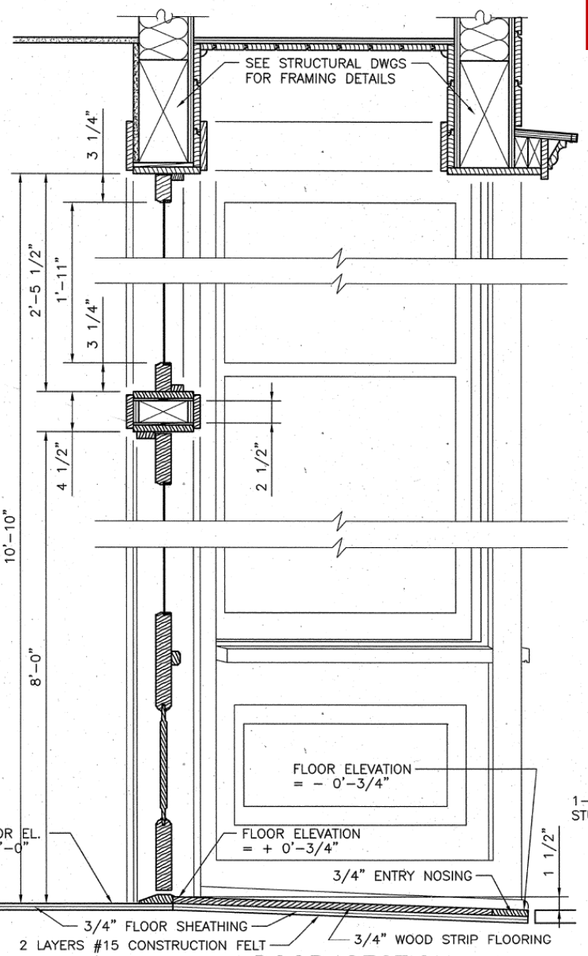


B A12 A12 DOOR SECTION
SCALE C

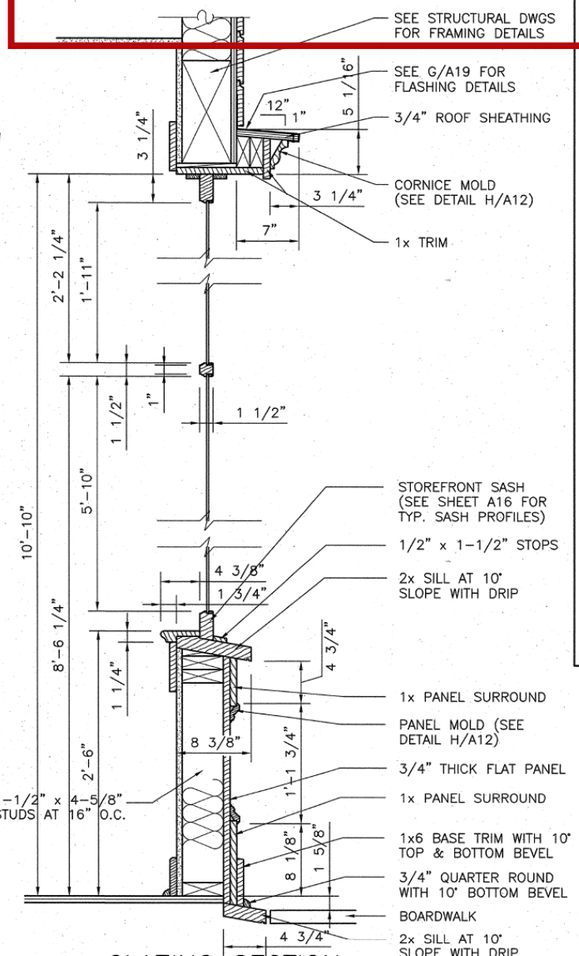


C A12 A12 GLAZING SECTION
SCALE C

SCALE (A) 4 0 4 8 SCALE OF FEET 1/4" = 1'-0"

SCALE (B) 1 0 1 2 SCALE OF FEET 1" = 1'-0"

SCALE (C) 12 6 0 12 SCALE OF INCHES 1-1/2" = 1'-0"

SCALE (D) 1 0 1 2 SCALE OF INCHES FULL SIZE

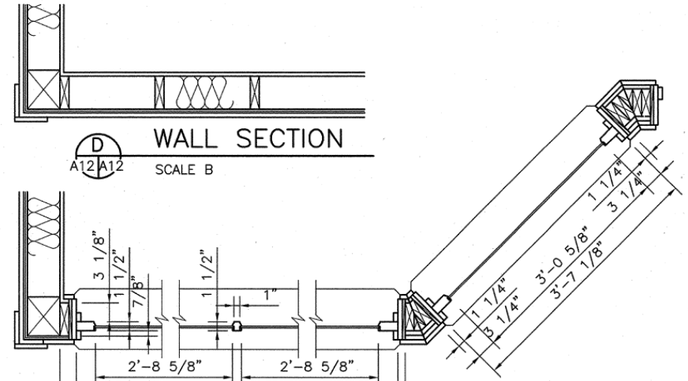


D A12 A12 WALL SECTION
SCALE B

E A12 A12 GLAZING SECTION
SCALE B

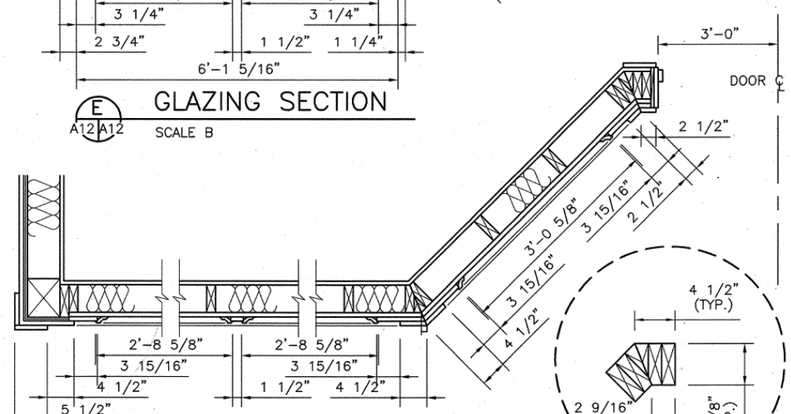


F A12 A12 PANEL SECTION
SCALE B

SCALE C

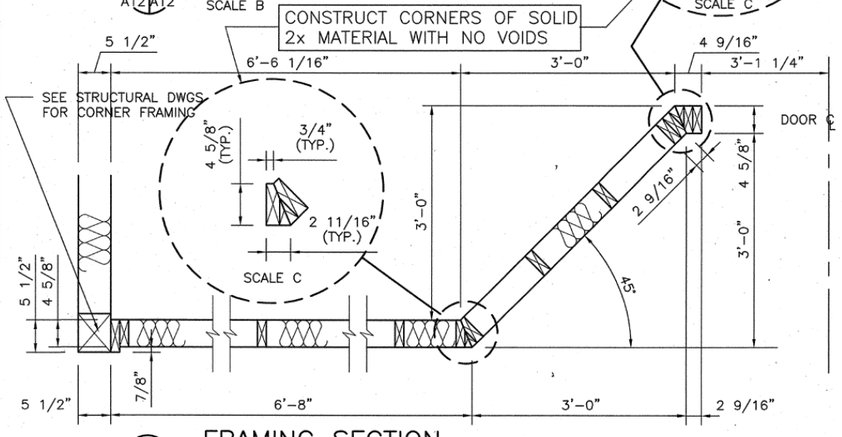


G A12 A12 FRAMING SECTION
SCALE B

| | | | |
|---|---|---|---|
| DESIGNED: R. CONRAD<br>DRAWN: R. CONRAD<br>TECH. REVIEW: R. CONRAD<br>DATE: 9/97 | SUB SHEET NO. A12 | TITLE OF SHEET: ANNEX STOREFRONT<br>PANTHEON SALOON<br>KLONDIKE GOLD RUSH N.H.P. | DRAWING NO. 461 25,042<br>PKG. NO. 114H<br>SHEET 13 OF 36 |

9/4/97 17:41 R:\CONRAD_P\WLCGO\114H\DWG\ABDR\13-ASENT

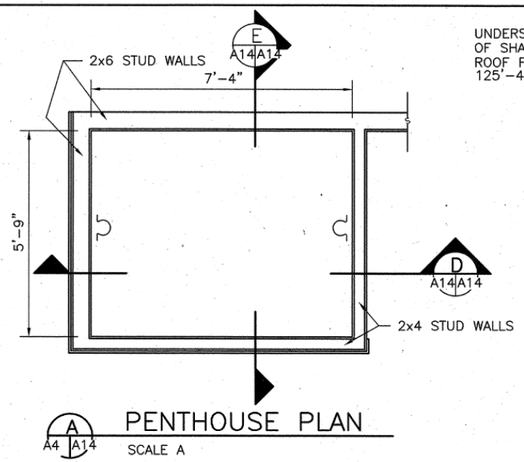


A PENTHOUSE PLAN
A4 A14 SCALE A

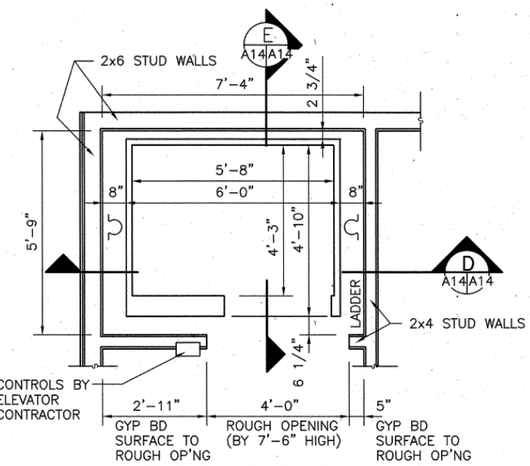


B THRESHOLD PLAN
A2 A3 A14 SCALE A

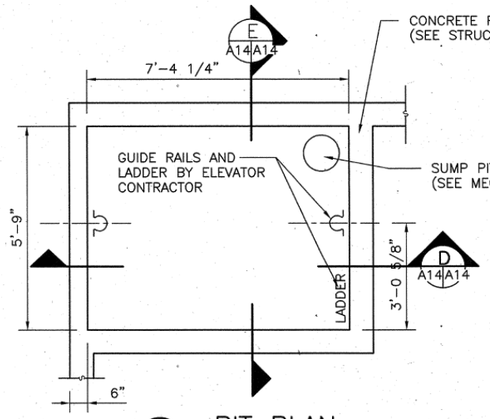


C PIT PLAN
AX A14 SCALE A

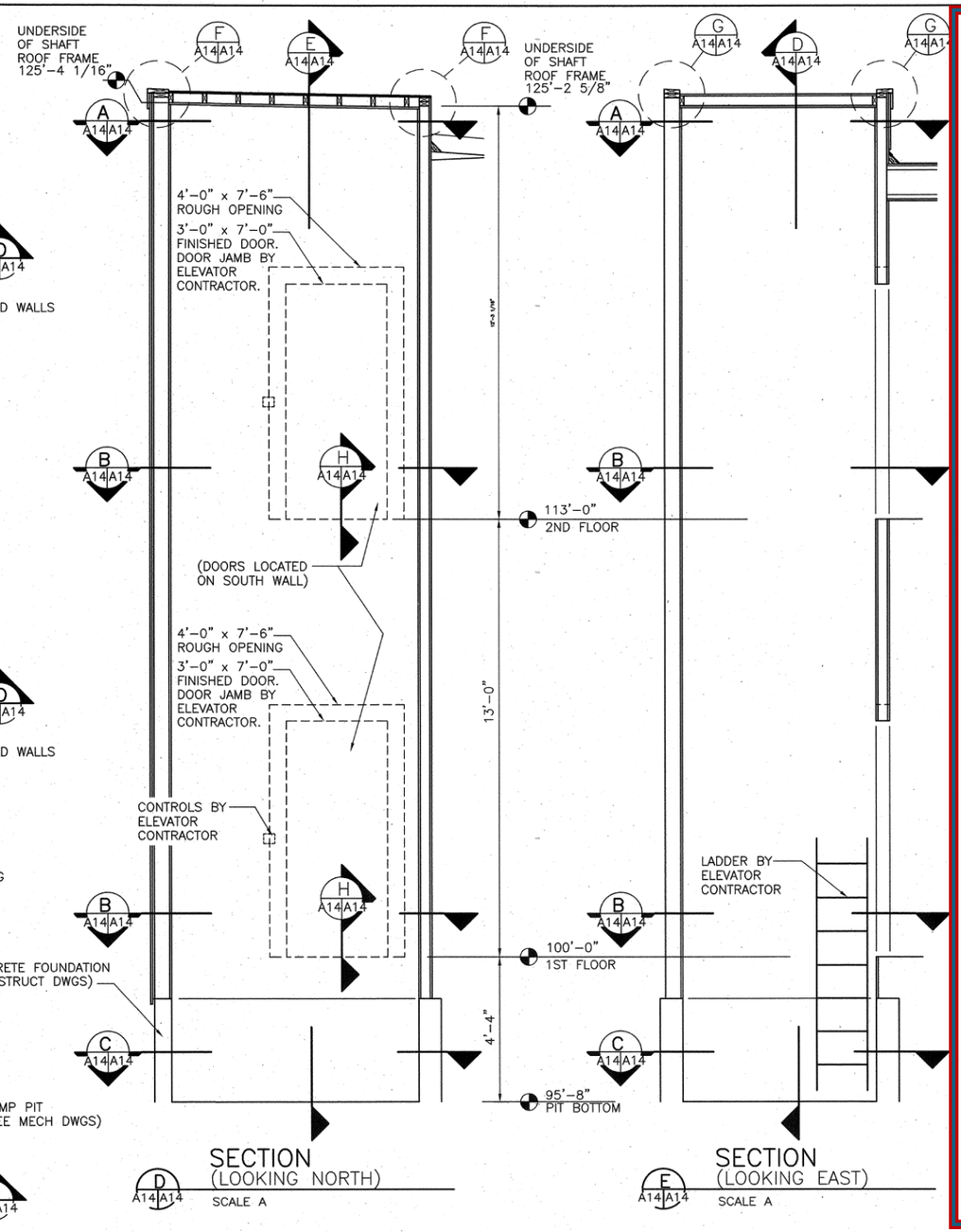


D SECTION (LOOKING NORTH)
A14 A14 SCALE A

E SECTION (LOOKING EAST)
A14 A14 SCALE A

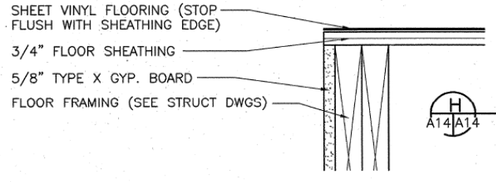


H NOSING DETAIL
A14 A14 SCALE D

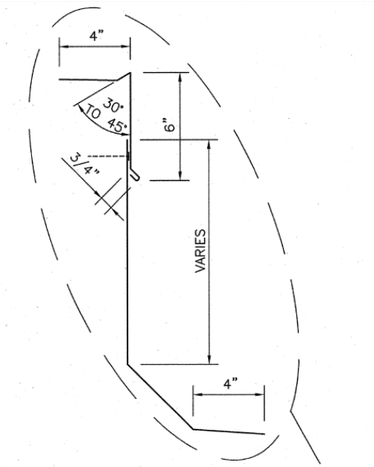


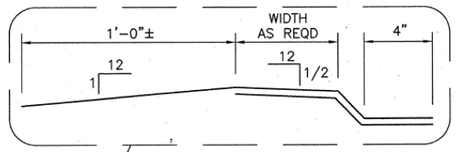


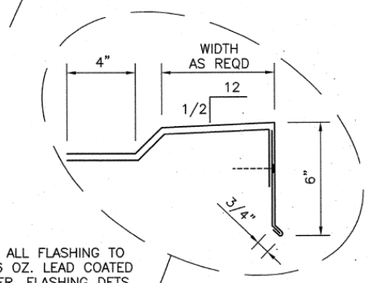


NOTE: ALL FLASHING TO BE 16 OZ. LEAD COATED COPPER. FLASHING DETS DRAWN AT SCALE C (3" = 1'-0")

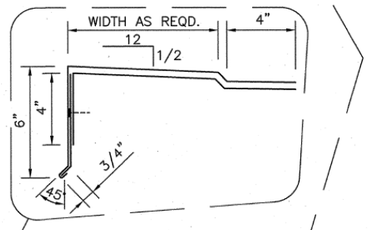


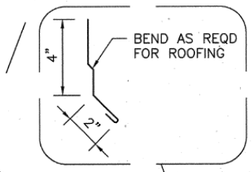


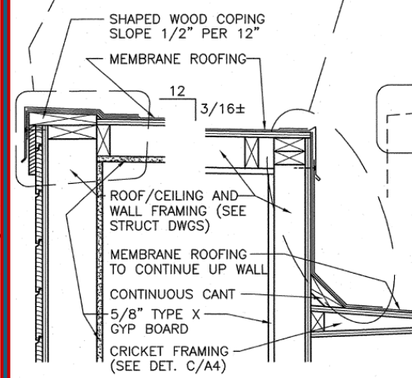


F SECTION (LOOKING NORTH)
A14 A14 SCALE B

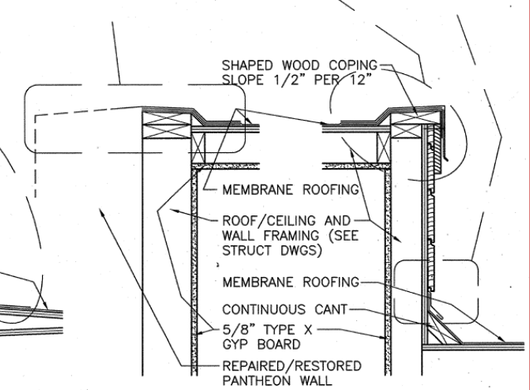


G SECTION (LOOKING EAST)
A14 A14 SCALE B

SCALE (D) 6 3 0 6 — SCALE OF INCHES 3" = 1'-0"

SCALE (B) 12 6 0 12 — SCALE OF INCHES 1-1/2" = 1'-0"

SCALE (C) 6 3 0 6 — SCALE OF INCHES 3" = 1'-0"

SCALE (A) 2 0 2 4 — SCALE OF FEET 1/2" = 1'-0"

| | | | | |
|---|---|---|---|---|
| DESIGNED: R. CONRAD<br>CADD R. CONRAD<br>TECH. REVIEW: R. CONRAD<br>DATE: 9/97 | SUB SHEET NO. A14 | TITLE OF SHEET<br>ELEVATOR DETAILS<br>PANTHEON SALOON<br>KLONDIKE GOLD RUSH N.H.P. | DRAWING NO. 461 25,042<br>PKG. NO. 114H<br>SHEET 15 OF 36 | |

9/4/97 17:43 R:\CONRAD P:\KLGOL114H\DAYLABOR\15-ELEV

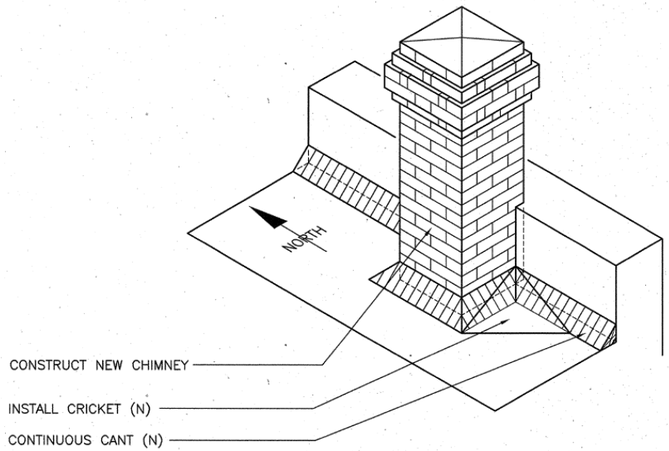


A A4 A18 CHIMNEY ISOMETRIC
SCALE A

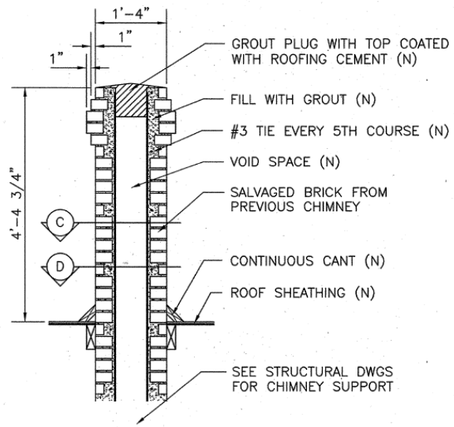


B A18 A18 CHIMNEY SECTION
SCALE A

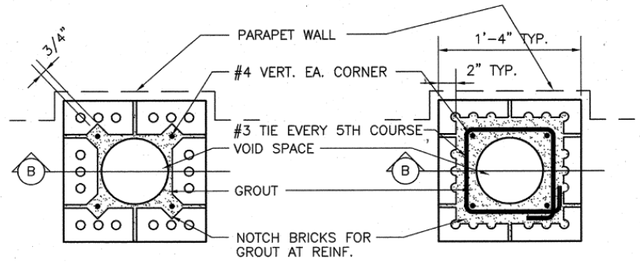


C A18 A18 SECTION
SCALE B

D A18 A18 SECTION
SCALE B

GENERAL NOTES
1. CUT CANT STRIP (3 7/8" HIGH) FROM 2x6.
2. SEE DET. C SHT. A19 FOR FLASHING.

SCALE (B) 12 6 0 12
SCALE OF INCHES
1-1/2" = 1'-0"

SCALE (A) 1 0 1 2 3
SCALE OF FEET
3/4" = 1'-0"

| | | | |
|---|---|---|---|
| DESIGNED: R. CONRAD<br>DRAWN: R. CONRAD<br>TECH. REVIEW: R. CONRAD<br>DATE: 9/97 | SUB SHEET NO. A18 | TITLE OF SHEET: CHIMNEY DETAILS<br>PANTHEON SALOON<br>KLONDIKE GOLD RUSH N.H.P. | DRAWING NO. 461 25,042<br>PKG. NO. 114H<br>SHEET 19 OF 36 |

9/4/97 17:47 R:\CONRAD P\KLGO\114H\DAYLABOR\19-ACHM

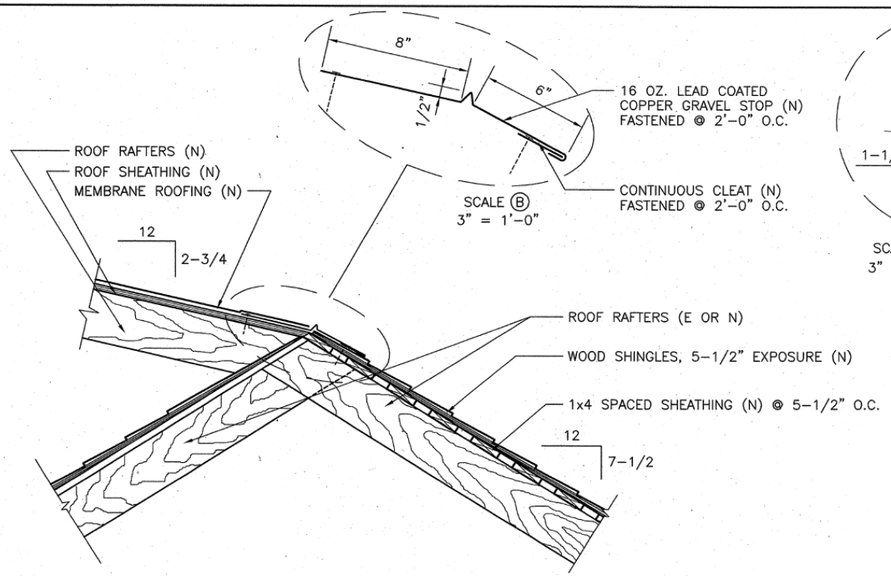


A A4 A19 A6 ROOF SECTION AT BREAK
SCALE A

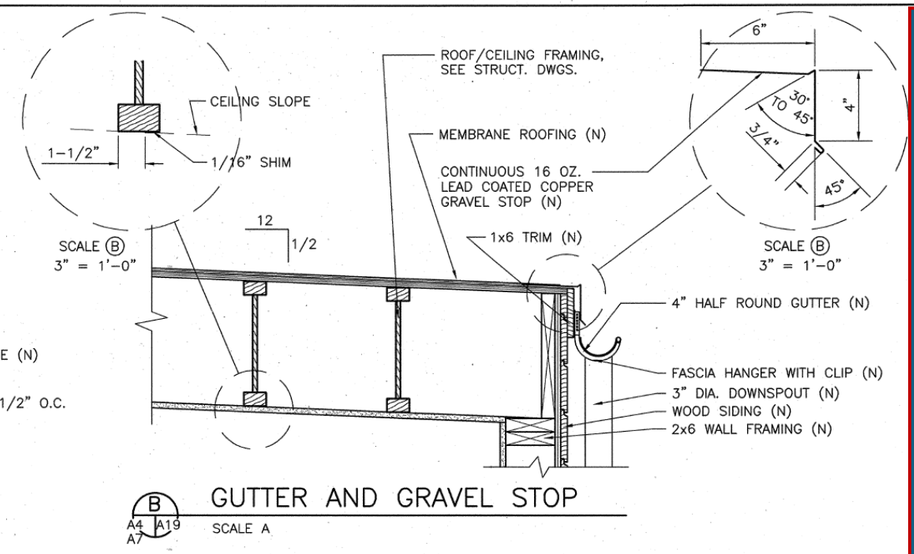


B A4 A19 A7 GUTTER AND GRAVEL STOP
SCALE A

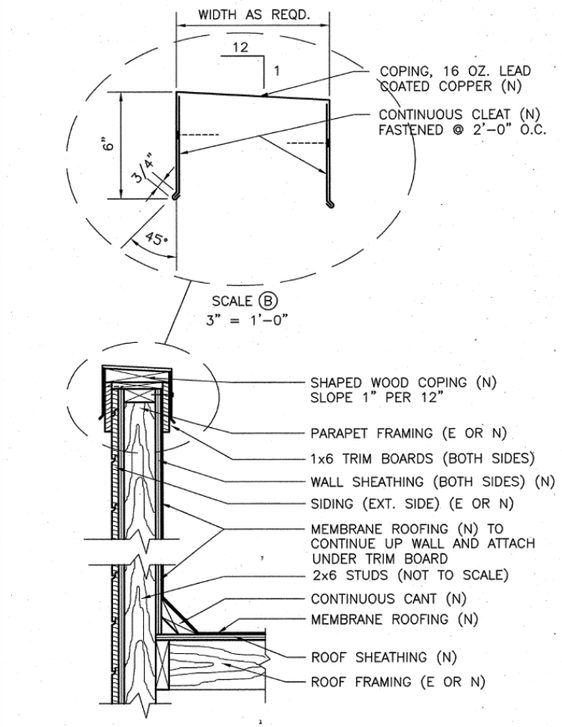


D A4 A5 A6 A19 TYP. PARAPET FLASHING
SCALE A

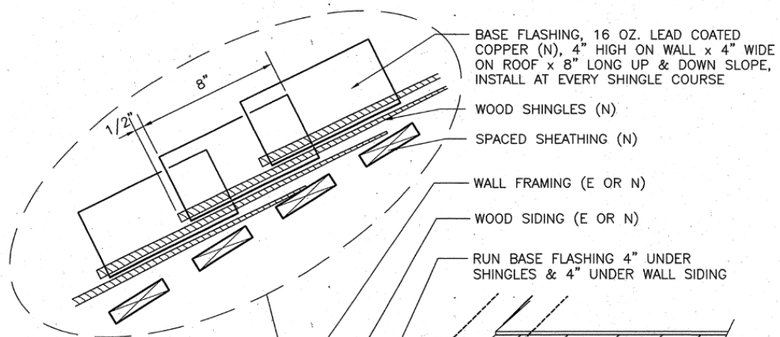


E A4 A5 A6 A19 ROOF FLASHING AT FALSE FRONT
SCALE A

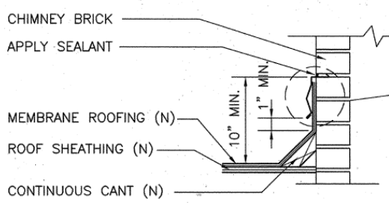


C A18 A19 CHIMNEY FLASHING
SCALE A

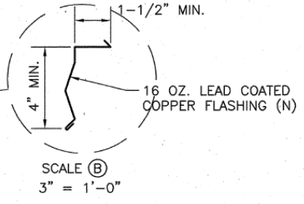


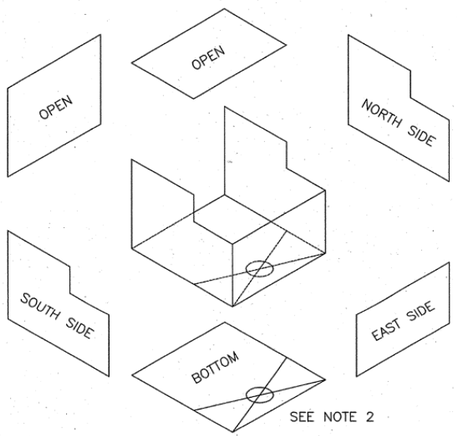


F A4 A5 A19 SCUPPER DETAILS
SCALE A

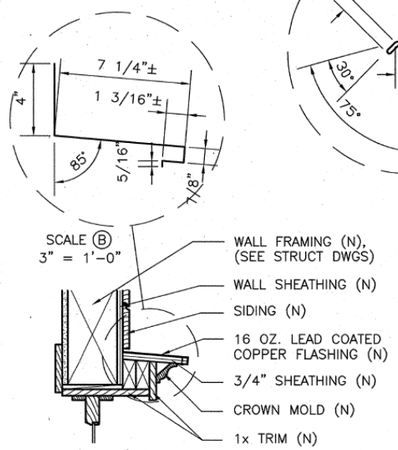


G A12 A19 ANNEX STOREFRONT FLASHING
SCALE A

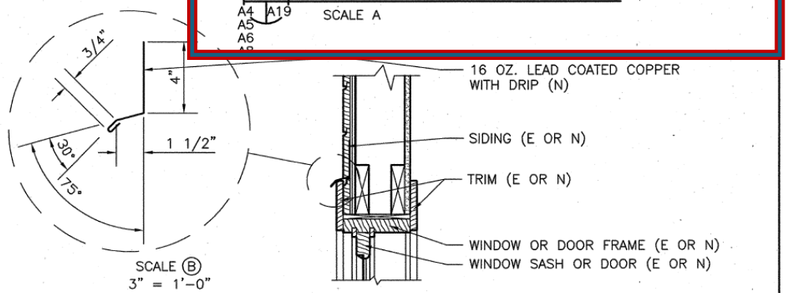


H A19 A19 TYP. DOOR/WINDOW HEAD FLASHING
SCALE A

SCALE B 6 3 0 6 SCALE OF INCHES 3" = 1'-0"

SCALE A 12 6 0 12 SCALE OF INCHES 1-1/2" = 1'-0"

GENERAL NOTES
1. CUT CANT STRIP (3 7/8" HIGH) FROM 2x6
2. USE EXISTING SCUPPER AS PATTERN TO CREATE NEW SCUPPER.

| | | | |
|---|---|---|---|
| DESIGNED: R. CONRAD<br>DRAWN: R. CONRAD<br>TECH. REVIEW: R. CONRAD<br>DATE: 9/97 | SUB SHEET NO. A19 | TITLE OF SHEET: FLASHING DETAILS<br>PANTHEON SALOON<br>KLONDIKE GOLD RUSH N.H.P. | DRAWING NO. 461 25,042<br>PKG. NO. 114H<br>SHEET 20 OF 36 |