Standard Terminal Automation Replacement System (STARS)

System Specification Document (SSD)

FAA-E-2904

Revision F

19th November, 2021

Focal Point
Lisa Bercher
Organization: AJM-211

Federal Aviation Administration
800 Independence Avenue SW

Washington, DC 20591

Revision Record		
Revision Letter	**Description**	**Date**
Original	Initial Issue	02/28/96
SCN-1	Changes requirements to implement interfaces between STARS and ESC-1 improvements (pFAST, PRM, SMA, NA, TCP-defined airspace, Free-form text, ASTERIX and the pFAST Functional Specification)	02/16/99
A	Incorporates approved contractual and design requirements changes through January 31, 2000	12/13/01
B	In accordance with FAA-STD-067 and direction from the JRC, this entire document has been changed and updated.	10/4/16
C	Incorporates approved contractual and design requirements changes through January 31, 2017 in conjunction with the latest SSS Rev Y	7/26/17
D	De-Clutter this document by scaling back on the detail and repetition of requirements.	10/01/18
E	Incorporates requirement changes to support the software changes related to R8/R9/R10, and TSAS color changes. This revision also includes traceability to the STARS fPRD. Updated FAA Specification references (fPRD and ICDs)	7/31/20
F	Incorporates requirement changes in support of the Dismounted TCW, software changes related to R1A, and the new TDM contrast ratio, brightness, and power switch location. Updated referenced standards.	11/19/21

SIGNATURE PAGE

SSD Approved by:		
Lisa Bercher TAMR Program Manager, AJM-2110	LISA A BERCHER Signature	Digitally signed by LISA A BERCHER Date: 2022.05.04 13:49:37 -04'00' Date
SSD Submitted by:		
Lisa Cacciatore TAMR Systems Engineering Program Manager, AJM-2113	LISA E CACCIATORE Signature	Digitally signed by LISA E CACCIATORE Date: 2022.05.03 15:24:56 -04'00' Date

TABLE OF CONTENTS

1 Introduction 1
1.1 BACKGROUND 1
1.2 SCOPE 1
1.3 PURPOSE 1
1.4 IDENTIFICATION 1
1.5 SPONSORSHIP 2
1.6 SYSTEM ARCHITECTURE 2
2 Reference Documents 4
2.1 FAA SPECIFICATIONS 4
2.2 FAA PUBLICATIONS 5
2.3 FAA ORDERS 5
2.4 MILITARY STANDARDS 6
2.5 FEDERAL STANDARDS 6
2.6 FEDERAL PUBLICATIONS 7
2.7 INDUSTRY STANDARDS 7
2.8 OTHER DOCUMENTS 8
3 STARS Requirements 10
3.1 STARS STATES, SERVICE LEVELS AND MODES 10
3.1.1 Operational Sites 10
3.1.1.1 States and Recovery 10
3.1.1.1.1 Resource States 10
3.1.1.1.2 Recovery 12
3.1.1.2 Service Levels 12
3.1.1.2.1 Concurrent Operation 12
3.1.1.2.2 Full Service Level (FSL) 12
3.1.1.2.3 Emergency Service Level (ESL) 13
3.1.1.2.4 Emergency Full Service Level (EFSL) 13
3.1.1.2.5 Site Support Service Level (SSSL) 13
3.1.1.2.6 Service Level Independence 13
3.1.1.2.7 Service Level Interdependence 13
3.1.1.3 Modes 14
3.1.1.3.1 Full Service (FS) Workstation Mode 15
3.1.1.3.2 Emergency Service (ES) Workstation Mode 15
3.1.1.3.3 FS Training Workstation Mode 15
3.1.1.3.4 ES Training Workstation Mode 16
3.1.1.3.5 FS Performance Verification Workstation Mode 16
3.1.1.3.6 ES Performance Verification Workstation Mode 16
3.1.1.3.7 MCP Workstation Mode 16
3.1.1.3.8 MCP Views 17
3.1.1.3.9 Service Level Modes 17
3.1.1.3.10 Direct Sensor Access (DSA) Mode 17
3.1.1.3.11 Direct Sensor Feed (DSF) 18
3.1.2 Support Sites (OSF, SCSC) 18
3.1.3 STARS LITE 18
3.2 STARS CAPABILITIES 19
3.2.1 Operational Sites 19
3.2.1.1 Full Service 19
3.2.1.1.1 ATC Surveillance 19
3.2.1.1.2 ATC Tracking 26
3.2.1.1.3 ATC Conflict Alert (CA) / Mode-C Intruder (MCI) 36
3.2.1.1.4 ATC Final Monitor Aid 38
3.2.1.1.5 ATC Minimum Safe Altitude Warning (MSAW) 42
3.2.1.1.6 ATC Converging Runway Display Aid (CRDA) 44
3.2.1.1.7 ATC Controller Automated Spacing Aid (CASA) 46
3.2.1.1.8 ATC Flight Data Processing 51
3.2.1.1.9 En Route and TFMS Interfaces 58

3.2.1.1.10 TCP Data Entry ... 76
3.2.1.1.11 TCP Data Display ... 105
3.2.1.1.12 Status Monitoring ... 132
3.2.1.1.13 Performance Monitoring ... 136
3.2.1.1.14 System Control ... 138
3.2.1.1.15 FSL Verification ... 141
3.2.1.1.16 Data Recording ... 143
3.2.1.1.17 TCW/TDW Replay ... 144
3.2.1.1.18 Full Service Security ... 145
3.2.1.1.19 Independent Time Source ... 148
3.2.1.1.20 MCP Data Entry ... 148
3.2.1.1.21 MCP Data Display ... 149
3.2.1.1.22 Application Interface Gateway ... 150
3.2.1.1.23 FS Performance ... 150
3.2.1.2 Emergency Service ... 167
3.2.1.2.1 ATC Surveillance ... 167
3.2.1.2.2 TCP Data Entry ... 171
3.2.1.2.3 TCP Data Display ... 174
3.2.1.2.4 Status Monitoring ... 178
3.2.1.2.5 System Control ... 185
3.2.1.2.6 ESL Subsystem Verification ... 190
3.2.1.2.7 ESL Time Source ... 196
3.2.1.2.8 MCP Data Entry ... 196
3.2.1.2.9 MCP Data Display ... 196
3.2.1.2.10 ES Performance ... 197
3.2.1.2.11 Emergency Service Security ... 204
3.2.1.3 Operational Site Support Subsystem ... 205
3.2.1.3.1 Interfacility Test Function ... 206
3.2.1.3.2 Simulation ... 206
3.2.1.3.3 Data Reduction and Analysis (DR&A) Data Class Extraction ... 209
3.2.1.3.4 On-Site Maintenance ... 221
3.2.1.3.5 Independent Time Source ... 221
3.2.1.3.6 Operational Site Support Performance ... 222
3.2.2 SCSC & OSF Support Systems ... 222
3.2.2.1 SCSC & OSF Location ... 222
3.2.2.2 SCSC & OSF Maintenance Configurations ... 222
3.2.2.3 Software Storage ... 222
3.2.2.4 File Format ... 222
3.2.2.5 SCSC SDC ... 222
3.2.2.6 SCSC FSC ... 223
3.2.2.7 OSF SMC ... 224
3.2.2.8 OSF STC ... 224
3.2.2.13 SCSC and OSF System Security ... 229
3.2.2.16 SCSC and OSF System Performance ... 231
3.3 STARS EXTERNAL INTERFACES ... 231
3.3.1 External Interface Standards ... 231
3.3.2 Operational Site Interfaces ... 231
3.3.2.1 Interface Diagram ... 231
3.3.2.2 Digital Surveillance Systems Interface ... 231
3.3.2.3 Number of Terminal/En Route Interfacility Interfaces ... 242
3.3.2.4 Terminal/En Route Interfacility Interface Characteristics ... 242
3.3.2.6 TFMS Interface Characteristics ... 242
3.3.2.7 Tower Interface ... 243
3.3.2.8 Remote Display Interface ... 243
3.3.2.10 External Applications Interfaces ... 244
3.4 STARS INTERNAL INTERFACES ... 245
3.5 ADAPTATION ... 245
3.6 SAFETY ... 245
3.6.1 Personnel Safety ... 245
3.6.2 Hazardous Materials ... 246
3.6.3 Physical Safety ... 246

3.6.4 Electrical Safety ... 246
3.6.5 Cabling and Connections ... 246
3.6.6 National Electrical Code Adherence ... 246
3.6.7 Fire Resistance ... 246
3.7 SECURITY AND PRIVACY ... 246
3.7.1 General Security Requirements ... 247
3.8 SYSTEM ENVIRONMENT ... 247
3.9 COMPUTER RESOURCES ... 247
3.10 SYSTEM QUALITY FACTORS ... 248
3.11 DESIGN AND CONSTRUCTION CONSTRAINTS ... 249
3.11.1 Architectural ... 249
3.11.2 Hardware ... 249
3.11.2.1 Connectivity and Characteristics ... 250
3.11.2.2 Keyboard Characteristics ... 250
3.11.2.3 Mouse/Trackball Characteristics ... 252
3.11.2.4 Special Tools ... 253
3.11.2.5 Terminal Controller Workstation (TCW) ... 253
3.11.2.6 TCW/TDW DCP Characteristics ... 255
3.11.2.7 TCW/TDW Characteristics ... 262
3.11.2.8 Monitor and Control Workstation (MCW) ... 262
3.11.2.9 Tower Display Workstation (TDW) ... 262
3.11.2.10 Tower Display Monitor (TDM) Characteristics ... 263
3.11.2.11 Supplemental Display ... 263
3.11.2.12 TDW Distance Limitations ... 264
3.11.2.13 Miscellaneous Hardware ... 264
3.11.3 Software ... 264
3.11.4 Firmware ... 265
3.11.5 Electrical ... 265
3.11.6 Mechanical ... 266
3.12 COMPUTER HUMAN INTERFACE (CHI) ... 267
3.12.1 General CHI ... 267
3.13 ADDITIONAL ... 294
3.13.1 Preplanned Product Improvement (P3I) ... 294
3.13.1.1 Interfaces ... 295
3.13.1.2 Specific P3I Capability Upgrades ... 295
3.13.1.2.1 Surveillance System Enhancements ... 295
3.13.1.2.2 Integrated Terminal Weather System (ITWS) ... 295
3.13.1.2.3 ASR-9 Wind Shear Processor ... 295
3.13.1.2.4 Terminal Doppler Weather Radar (TDWR) ... 295
3.13.1.2.5 Data Link Communications ... 296
3.13.1.2.6 CA and MCI Alert Enhancements ... 296
3.13.1.2.7 Traffic Management Enhancements ... 296
3.13.1.2.8 Supplemental Flight Data Processing (FDP) ... 296
3.13.1.2.9 TCP-Defined Airspace ... 297
3.13.1.2.10 FSL TCP Display Data Fields ... 297
4 Qualification Provisions ... 297
4.1 QUALITY ASSURANCE ... 297
4.1.1 ISO Standards ... 297
4.1.2 Completeness ... 297
4.1.3 Detection of Deficiencies ... 297
4.2 TEST PROGRAM ... 297
4.2.1 Test Strategy ... 298
4.2.2 Traceability ... 298
4.2.3 Test Conduct ... 298
4.2.3.1 Success Criteria ... 298
4.2.3.2 Pass/Fail ... 298
4.2.3.3 Pass/Fail Criteria ... 298
4.2.3.4 Test Completeness ... 298
4.2.3.5 Test Repeatability ... 298

4.2.3.6 Discrepancies ... 298
4.2.4 Test Methods ... 298
4.2.4.1 Applicability ... 298
4.2.4.2 Inspection ... 298
4.2.4.3 Analysis ... 298
4.2.4.4 Demonstration ... 299
4.2.4.5 Test ... 299
4.2.4.6 Review ... 299
4.2.5 Program Technical Reports (PTR) ... 299
4.2.5.1 PTR Objective ... 299
4.2.5.2 PTR Classifications ... 299
4.2.5.2.1 Type I ... 299
4.2.5.2.2 Type II ... 299
4.2.5.2.3 Type III ... 299
4.2.5.2.4 Type IV ... 299
4.3 TEST REQUIREMENTS ... 299
4.3.1 Applicability ... 299
4.3.2 Installation and Integration ... 300
4.3.2.1 Installation ... 300
4.3.2.2 Installation Tests ... 300
4.3.2.3 Integration Testing ... 300
4.3.3 Scenarios ... 300
4.3.3.1 Test Scenario ... 300
4.3.3.2 Background Scenario ... 300
4.3.3.2.1 Purpose ... 300
4.3.3.2.2 Characteristics ... 300
4.3.3.3 Maximum Stress Workload Scenario ... 301
4.3.3.3.1 Purpose ... 301
4.3.3.3.2 Workload Scenario Length ... 301
4.3.3.3.3 Concurrent Workload ... 301
4.3.3.3.4 Steady-State Period ... 301
4.3.3.3.5 TCW Workload ... 301
4.3.3.3.6 Distributed Load ... 301
4.3.3.3.7 System Configuration ... 301
4.3.4 Development Test and Evaluation (DT&E) ... 301
4.3.4.1 DT&E Components ... 301
4.3.4.2 FAA Technical Center Installation and Integration ... 302
4.3.4.3 Non-Operational Test ... 302
4.3.4.3.1 Purpose ... 302
4.3.4.3.2 Safety ... 302
4.3.4.3.3 System Environment ... 302
4.3.4.3.4 Reliability ... 302
4.3.4.3.5 Maintainability ... 302
4.3.4.3.6 Design and Construction ... 302
4.3.4.4 FAA Technical Center System Acceptance Test ... 302
4.3.4.4.1 General Test Conditions ... 302
4.3.4.4.2 Functional Tests ... 303
4.3.4.4.3 Site Adaptation ... 306
4.3.4.4.4 Computer Resource Utilization ... 306
4.3.4.4.5 System Enhancement ... 306
4.3.4.4.6 Scalability ... 306
4.3.4.4.7 Performance Tests ... 306
4.3.4.4.8 Interfaces ... 308
4.3.4.4.9 Confidence and Stability Tests ... 309
4.3.4.4.10 Support Tools ... 309
4.3.4.4.11 System Internal Interfaces ... 309
4.3.4.5 Key Site System Acceptance Test ... 309
4.3.4.5.1 Purpose ... 309
4.3.4.5.2 Installation and Integration ... 310
4.3.4.5.3 Test Conditions ... 310
4.3.4.5.4 Functional Tests ... 310

4.3.4.5.5 Key Site Adaptation 310
4.3.4.5.6 Workload 310
4.3.4.5.7 Confidence and Stability 310
4.3.4.5.8 Verification Tests 310
4.3.5 Contractor Acceptance Test and Evaluation (CAT&E) 311
4.3.5.1 Scope 311
4.3.5.2 Site Installation and Integration 311
4.3.5.3 Use of Adaptation Data 311
4.3.5.4 Site System Acceptance Tests 311
4.3.5.4.1 Scope 311
4.3.5.4.2 Functional Tests 311
4.3.5.4.3 Workload 311
4.3.5.4.4 Confidence and Stability 311
4.3.5.5 Performance Verification 311
4.4 REQUIREMENTS TRACEABILITY MATRIX 312
5 Requirements Traceability 312
6 Notes 312
6.1 ACRONYMS AND ABBREVIATIONS 312
6.2 DEFINITIONS 316
6.3 TRACEABILITY MATRIX 347

LIST OF FIGURES

1-1	STARS System Architecture	3
3-1	STARS Operational Site Service Levels and Modes of Operation – dual FSL System Configuration	10
3-2	STARS Operational Site Service Levels and Modes of Operation – G1 or G2 System Configuration	10
3.2.1.1.4-1	AMZ with Three Parallel Runways	39
3.3.2.6-1	Operational Site External Interfaces	243
3.11.2.2-1	Keyboard Menu Key Labels	251
3.11.2.2-2	Color of Key Caps and Marking	252
3.11.2.2-3	QWERTY Keyboard Layout	252
3.11.2.5-1	STARS TCW	254
3.11.2.6-1	TCW Display Control Panels	256
3.11.2.6-2	Backlit Panel	257
3.11.2.6-3	TDW DCP Configuration Options	261
3.12.7-1	Target Symbol Illustration	280

LIST OF TABLES

3-1	Summary of Required Operational Site Modes	15
3.2.1.1.7-1	Weight Class (from light to heavy)	46
3.2.1.1.7-2	IFR Separation Categories	47
3.2.1.1.9-1	An In-Out-In Series May Consist of:	61
3.2.1.1.9-2	Amendment Message Processing	62
3.2.1.1.10-1	Example with 1N as the sending position and 1F as the receiving TCP	104
3.2.1.1.23-1	FS System Workload, Sources and Destinations of Data	150
3.2.1.1.23-2	FS System Workload, Airspace Definition	151
3.2.1.1.23-3	FS System Workload, System Data Capacity	151
3.2.1.1.23-3A	STARS LITE System Workload, System Data Capacity	152
3.2.1.1.23-4	FS System Workload, Input Message Rates	152
3.2.1.1.23-5	FS System Workload, Output Message Rates	153
3.2.1.1.23-6	FS System Workload, Single Sensor Peak Target Rates	154
3.2.1.1.23-7	FS Individual Data Display Workload	154
3.2.1.1.23-7A	STARS LITE Individual Data Display Workload	155
3.2.1.1.23-8	FS Simultaneous Data Display Workload	156
3.2.1.1.23-8A	STARS LITE Simultaneous Data Display Workload	156
3.2.1.1.23-9	Long and Short Range Surveillance Sensor Characteristics	161
3.2.1.1.23-10	Aircraft Motion Characteristics	161
3.2.1.1.23-11	Track Loss Probability, Short Range Radar Inputs	161
3.2.1.1.23-11A	Track Loss Probability, Multilateration Inputs	162
3.2.1.1.23-11B	Target Acceleration, Multilateration Inputs	162
3.2.1.1.23-12	Track Swap Probability, Short Range Radar Inputs	162
3.2.1.1.23-13	Steady State Position Accuracy, Short Range Radar Inputs	163
3.2.1.1.23-14	Steady State Position Accuracy, Long Range Radar Inputs	163
3.2.1.1.23-15	Steady State Speed Stability, Short Range Radar Inputs	163
3.2.1.1.23-16	Transient Speed Stability, Short Range Radar Inputs	164
3.2.1.1.23-17	Steady State Speed Accuracy, Short and Long Range Radar Inputs	164
3.2.1.1.23-18	Steady State Heading Accuracy, Short and Long Range Radar Inputs	164
3.2.1.1.23-19	Transient Track Position, Speed and Heading Accuracy, Short Range Radar Inputs	164
3.2.1.1.23-20	Time to Establish Steady-State Tracking, Short Range Radar Inputs	165
3.2.1.1.23-21	Altitude Tracker	165
3.2.1.1.23-22	Conflict Alert Rate of Detection Requirements	165
3.2.1.1.23-23	Minimum Safe Altitude Warning Rate of Detection Requirements	166
3.2.1.2.10-1	ES System Workload, Sources and Destinations of Data	198
3.2.1.2.10-2	ES System Workload, Airspace Definition	198
3.2.1.2.10-3	ES System Workload, Input Message Rates	198
3.2.1.2.10-4	ES System Workload, Additional Input Message Rates	199
3.2.1.2.10-5	ES System Workload, Output Message Rates	199
3.2.1.2.10-6	ES System Workload, Single Sensor Peak Target Rates	199
3.2.1.2.10-7	ES Individual Data Display Workload	200
3.2.1.2.10-8	ES Simultaneous Data Display Workload	200
3.2.1.3.3-1	Plot File	212
3.3.2.2.7-1	Interface Characteristics	232
3.3.2.2.7-2	Departure Flight Plan (Format 1)	233
3.3.2.2.7-3	Departure Flight Plan (Format 2)	233
3.3.2.2.7-4	Arrival Flight Plan (Format 1)	234
3.3.2.2.7-5	Arrival Flight Plan (Format 2)	235
3.3.2.2.7-6	Overflight Flight Plan (Format 1)	235
3.3.2.2.7-7	Overflight Flight Plan (Format 2)	236
3.3.2.2.7-8	Delete Flight Plan	237
3.3.2.2.7-9	Modify Aircraft ID in Flight Plan	237
3.3.2.2.7-10	Modify Time in Flight Plan	238

3.3.2.2.7-11	Modify Aircraft Type in Flight Plan	238
3.3.2.2.7-12	Modify Beacon Code in Flight Plan	239
3.3.2.2.7-13	Generic Flight Plan Update	239
3.3.2.2.7-14	Processing Logic for Supplementary Data in FDIO Message	239
3.3.2.2.7-15	Flight Plan Aircraft ID Field Supplementary Modification	240
3.3.2.2.7-16	Flight Plan Time Field Supplementary Modification	240
3.3.2.2.7-17	Flight Plan Aircraft Type Field Supplementary Modification	241
3.3.2.2.7-18	Flight Plan Beacon Code Field Supplementary Modification	241
3.12.6-1	Range Increments	274
3.12.6-2	FS Brightness Ranges	275
3.12.6-3	ES Brightness Ranges	276
3.12.7-1	Target Extent Symbol Adaptation Parameters	281
3.12.7-2	Processing Logic for Computation of Track Positional Uncertainty Value	283
3.12.7-3	Default Slant Range Values – Maximum Standard (Terminal) Separation	285
3.12.7-4	Default Eligibility/Loss-of-Eligibility Intervals	285
3.12.7-5	Processing Logic for Fused-Track Symbol Display	286
3.12.7-6	Colors	289
3.12.7-7	Color Coordinates	293

1 Introduction

1.1 Background

The terminal automation system forms the critical backbone of the Air Traffic Control (ATC) information network for the airports in the NAS. Terminal Air Traffic (AT) approach control and automation is achieved primarily through the use of STARS. The STARS hardware and software platform is adaptable to a wide range of traffic sizes within terminal domains, and via the TAMR Program Office, replaced the older automation platforms at facilities that previously utilized either Common Automated Radar Terminal Systems (CARTS) IIIE, Automated Radar Terminal Systems (ARTS) IIE or ARTS IE technology.

1.2 Scope

The STARS product line consists of several variants that, while operating the same baseline software and having the same system functionality, supports multiple hardware platforms. These variants include the baseline STARS system, referred to as Full STARS and STARS ELITE (Enhanced Local Integrated Tower Equipment). Full STARS consists of a redundant suite of hardware referred to as FSL (Full Service Level) along with an identical redundant suite for back-up purposes referred to as E-FSL (Emergency- Full Service Level). STARS ELITE consists of a redundant suite of hardware similar to Full STARS with a reduced footprint for smaller facilities.

This document establishes the performance and design requirements for the STARS system. Though there are several STARS system variants, the functional characteristics are unified across all variants. In this light, the requirements refer simply to "the system" and imply all of the STARS variants. This document includes the requirements for terminal surveillance data processing, flight data processing, internal and external interfaces, system monitoring and control, system support, human factors, security, design and construction, transition, and system performance characteristics and capabilities.

1.3 Purpose

This document provides the technical, performance, operational, and support characteristics for the STARS system. This includes the requirements for surveillance data processing, target tracking, flight data processing, computer human interfaces, safety alerts, external system interfaces, monitor and control, system security, system support, design and construction, and system performance characteristics and capabilities.

1.4 Identification

STARS provides to the controller appropriately scaled information about the location, identification and tracking of aircraft within terminal airspace. It supports Terminal Radar Approach Control (TRACON) controllers responsible for managing aircraft within terminal airspace and Air Traffic Control Tower (ATCT) controllers responsible for managing aircraft arriving and departing an airport. It supports system maintenance personnel in the detection, isolation and repair of hardware and software failures. It supports on-site training for both TRACON and ATCT controllers.

1.5 Sponsorship

The STARS procurement activity is administered by the FAA. The STARS procurement activity is sponsored jointly by the FAA and the DoD. The automation system resulting from the procurement activity is intended for use by FAA-authorized and DoD-authorized organizations and personnel. FAA-authorized and DoD-authorized users will include personnel engaged in civil, commercial and military air traffic control operations, air traffic management, system maintenance and monitoring, user training, and system test and upgrade.

1.6 System Architecture

Figure 1-1 depicts a top-level view of the system architecture used as a model to develop the requirements contained in this specification. This architecture portrays all major subsystems and external interfaces supporting national deployment.

In the context of this document, the terms local and co-located refer to equipment that is connected to the Local Area Network (LAN) of a TAMR facility, while the term remote refers to equipment that is connected via FAA Telecommunications Infrastructure (FTI) to a TAMR facility.

STARS implements two fundamental user displays – Monitor and Control Position (MCP) and Terminal Control Position (TCP). The MCP is the display that provides maintenance personnel the functionality to monitor and control the system. All system status, health, and error messages are displayed at the MCP. The TCP is the display that enables air traffic controllers to provide service to aircraft in the terminal environment. The primary function of the TCP is to display situational awareness information that has been collected by surveillance sensors and tracked by the system.

The STARS system supports a two way interface with a single NAS En Route Automation System to transmit and receive flight and control data. It supports a receive only interface with Digital Altimeter Setting Indicator (DASI), Airport Surveillance Radars (ASR), Air Route Surveillance Radars (ARSR), as well as, Automatic Dependent Surveillance Broadcast (ADS-B) and Multilateration (MLAT) surveillance sources.

STARS interfaces to a standard time source system to obtain a time reference that is consistent and accurate. The standard time data is used to ensure synchronization of data within and between nationally deployed systems and to “time-stamp” all recorded data.

The STARS system provides interfaces to various external NAS clients such as, Airport Surface Detection Equipment Model X (ASDE-X) and Precision Runway Monitor (PRM) for the purpose of providing flight and tracking data.

The STARS system provides a backup sensor capability through either Direct Sensor Feed (DSF) or Direct Sensor Access (DSA) connections. DSF connections are applicable to remote ATCT facilities, while DSA connections are appropriate for TRACONS and local ATCT facilities under the STARS ELITE configuration.

The STARS Central Support Complex (SCSC) manages and provides the ability to update software, adaptation, and system documentation. The SCSC will be capable of compiling, maintaining and performing Configuration Management of system software. The SCSC will be

capable of developing, verifying and performing Configuration Management of the site adaptation for each Operation Support Facility (OSF) and to support various testing efforts.

The OSF subsystems are logically part of the SCSC, but are located at sites physically removed from the SCSC. The OSF subsystems will be used to perform site adaptation and site support.

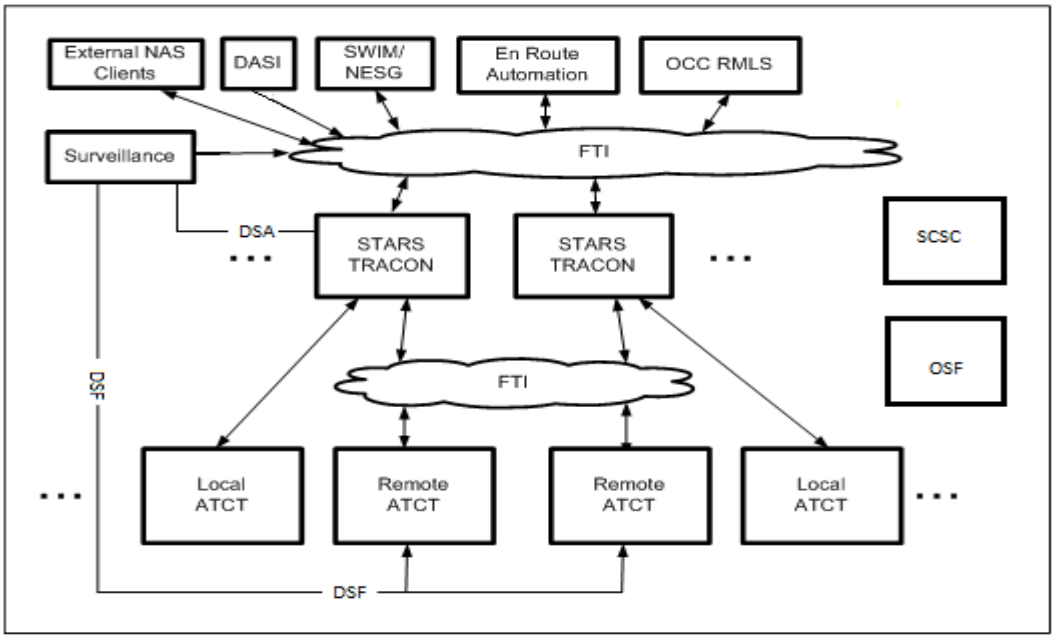

Figure 1-1: STARS System Architecture

2 Reference Documents

If a requirement within this document conflicts with a requirement in a referenced document, this document's requirement shall have precedence.

2.1 FAA Specifications

NAS-IC-82150001-01 Digital Altimeter Setting Indicator (DASI) to Terminal Automation Systems ICD, November 30 2012.

FAA Final Program Requirements for Terminal Automation Modernization and Replacement (TAMR), January 2017.

FAA-E-2312A Console, TRACON/RAPCON, January 15, 1976.

FAA-G-2100F Electronic Equipment, General Requirements, November 15, 1993.

NAS-IC-21052414 Standard Terminal Automation Replacement System (STARS) / Traffic Flow Management System (TFMS), April 24, 2012.

NAS-IC-21058100 Standard Terminal Automation Replacement System (STARS) to Air Route Traffic Control Center (ARTCC) for Interfacility Data Transfer (IFDT) ICD, Rev F, August 5, 2019.

NAS-IC-34032105 Airport Surveillance Radar Model 9 (ASR-9) / Standard Terminal Automation Replacement System (STARS) ICD, June 14, 2001.

NAS-IC-34132105 En Route Surveillance Radar / Standard Terminal Automation Replacement System (STARS) ICD, June 22, 2001.

NAS-MD-314 Computer Program Functional Specification – Local Outputs, September 30, 2003.

NAS-MD-315 Computer Program Functional Specification – Remote Outputs, October 4, 2003.

NAS-MD-581 FDIO Software ICD, April 2005.

NAS-IC-34112105 Airport Surveillance Radar Model 11 (ASR-11) to Standard Terminal Automation Replacement System (STARS), Rev K, June 19, 2006.

NAS-IC-21050001-01 Standard Terminal Automation Replacement System (STARS) General NAS User Services (GeNUS) ICD, Rev H, May 13, 2019.

H372347 Standard Terminal Automation Replacement System (STARS) to Automated Protocol Exchanger (APEX) for Interfacility Data Transfer (IFDT) Outside the United States ICD, August 7, 2008.

NAS-IC-34180001-01 Airport Surface Detection Equipment – Model X (ASDE-X) Multilateration Surveillance Data to Air Traffic Control (ATC) User Subsystem, March 9, 2009.

PRM-A System Requirements, Ver 1.3, August 30, 2006.

G710561 Interface Control Document between the ASR-11 Radar and the Data Translation Equipment, Rev P, November 19. 2010.

SE-002-02-20100812 Surveillance and Broadcast Services Integration into ATC Automation Processing Requirements Document (RD), February, 10, 2011.

FAA-E-3020 Surveillance and Broadcast Services Visual System Specification (SSD), December 14, 2010.

NAS-IC-82530001-01 Surveillance and Broadcast Services (SBS) Service Delivery Point (SDP) to ATC Automation and Service Monitoring User Subsystem ICD, August 23, 2016.

Microprocessor En Route Automated Radar Tracking System (Micro-EARTS) Computer Program Functional Specification (CPFS) NAS-MD-674 Conflict Alert (CA) and Altitude Reporting Mode of Secondary Radar (Mode C) Intruder (MCI), September 2008.

NAS-MD-322 Computer Program Functional Specification – Real Time Quality Control of Radar Data.

National Airspace System (NAS) Secure Operating System Configuration Baseline Standard for LINUX/UNIX, Version 2.2, November 27, 2013

NAS-IC-21058257 Standard Terminal Automation Replacement System (STARS) To and From Time Based Flow Management (TBFM) ICD, August 14, 2018.

2.2 FAA Publications

Operational Concept Document for the Standard Terminal Automation Replacement System (STARS): Airway Facilities, November 1995.

FAA Operational Requirements Document for Standard Terminal Automation Replacement System (STARS), June 1995.

STARS Interchange Format Agreement (SIFA), August 1999.

FAA Digital Aeronautical Information (DAI), Digital Obstacle File (DOF), Version 1.0, April 2001.

2.3 FAA Orders

FAA Order 6000.15 General Maintenance Handbook for Airways Facilities, August 1991.

FAA Order 6000.27 Transmittal of Maintenance Philosophy Steering Group Report, June 1979.

FAA Order 6480.7C Airport Traffic Control Tower and Terminal Radar Approach Control Facility Design Guidelines, April 28,1995.

FAA Order 7110.65N Air Traffic Control, February 21, 2002.

FAA Order 7210.3K Facility Operation and Administration, September 16, 1993.

FAA Order 1370.114 Implementation of Federal Aviation Administration (FAA) Telecommunications Infrastructure (FTI) Services and Information Security Requirements in the National Airspace System (NAS), January 4, 2012.

FAA Order 1370.117 National Airspace System (NAS) Internet Protocol (IP) Addressing Policy, April 25, 2016.

FAA Order 1370.121 FAA Information Security and Privacy Program & Policy, December 23, 2016.

FAA Notice 1370.46 NAS Information Security Incident Detection, Reporting, and Response, September 30, 2015.

FAA Notice 6100.23 TDM-to-IP Transition Requirements for NAS Systems, October 16, 2015.

2.4 Military Standards

MIL-STD-1472G, Department of Defense Design Criteria Standard (Human engineering), 11 January 2012.

MIL-STD-454N Standard General Requirements for Electronic Equipment, June 30, 1992.

MIL-STD-498 Software Development and Documentation, December 5, 1994.

MIL-HDBK-1280, Department of Defense Handbook for Keyboard Arrangements, 20 February 1998.

2.5 Federal Standards

Federal Information Processing Standards (FIPS) 119-ADA Ada Language Processors, March 13, 1995.

Federal Information Processing Standards (FIPS) 127-2 Database Language Structured Query Language (SQL), October 4, 1993.

Federal Information Processing Standards (FIPS) 146-2 Profiles for Open Systems Internetworking Technologies, June 20, 1995.

Federal Information Processing Standards (FIPS) 151-2 Portable Operating System Interface (POSIX) – System Application Program Interface (C Language), May 12, 1993.

Federal Information Processing Standards (FIPS) 156 Information Resource Dictionary System, August 3, 1992.

Federal Information Processing Standards (FIPS) 160-C C Language Processors, August 24, 1992.

Federal Information Processing Standards Publication (FIPS PUB) 140-2, Security Requirements for Cryptographic Modules, May 25, 2001.

Federal Information Processing Standards Publication (FIPS PUB) 199, Standards for Security Categorization of Federal Information and Information Systems, February 2004.

National Institute of Standards and Technology Special Publication (NIST SP) 800-53 revision 4, Security and Privacy Controls for Federal Information Systems and Organizations, April 2013.

2.6 Federal Publications

FCC 47CFR Part 15 Federal Communications Commission Code Federal Regulations, October 1, 1993.

Federal Emergency Management Agency (FEMA) document FEMA 74, Reducing the Risks of Nonstructural Earthquake Damage, September 1994.

2.7 Industry Standards

AS9100D, Quality Management Systems – Requirements for Aviation, Space, and Defense Organizations

Electronic Industries Association (EIA)-449 General Purpose 37-Position and 9-Position Interface for Data Terminal Equipment and Data Circuit Terminating Equipment Employing Serial Binary Data Interchange, February 1990.

EIA-530A High Speed 25-Position Interface for Data Terminal Equipment and Data Circuit-Terminating Equipment, March 1987.

EIA/Telecommunications Industry Association (TIA)-232E Interface Between Data Terminal Equipment and Data Circuit-Terminating Equipment Employing Serial Binary Data Interchange, July 1991.

National Fire Protection Association (NFPA) 70 National Electrical Code, 1996.

Postscript Manual, January 1992; Updates to Postscript Manual, 2nd Edition, 7 July 1995.

Underwriters Laboratory (UL)60950 Safety of Information Technology Equipment, Issue 3, December 11, 2000.

UL60950-1 Information Technology Equipment – Safety – Part 1: General Requirements, December 19, 2011.

AA-K759B-TK Ethernet Version 2.0 The Ethernet Local Area Network data Link Layer and Physical Layer Specifications, Version 2.0, November 1982

ISO/IEC 8802-3: 1996 Information Processing Systems Local Area Networks Carrier Sense Multiple Access with Collision Detect (CSMA/CD) and Institute of Electrical and Electronic Engineers (IEEE) 802.3

Institute of Electrical and Electronic Engineers (IEEE) 802.3, Standard for Ethernet, September 2015.

Institute of Electrical and Electronic Engineers (IEEE) 1003.1-2008/Cor 2-2016 - Portable Operating System Interface (POSIX(R)) - Base Specifications, September 30, 2016.

Internet Engineering Task Force (IETF) Request for Comment (RFC) 791, Internet Protocol Specification, September 1981.

Internet Engineering Task Force (IETF) Request for Comment (RFC) 2460, Internet Protocol, Version 6 (IPv6) Specification, December 1998.

International Organization for Standardization (ISO)/International Electrotechnical Commission (IEC) 9945:2009 Information technology — Portable Operating System Interface (POSIX®) Base Specifications, Issue 7, August 15, 2013.

International Organization for Standardization (ISO)/International Electrotechnical Commission (IEC) 23360-1:2006, Linux Standard Base (LSB) core specification 3.1 -- Part 1: Generic specification, December 15, 2006.

ANSI/HFES 100, Human Factors Engineering of Computer Workstations, 2007

Center for Internet Security (CIS) Red Hat Enterprise Linux 7 Benchmark, v2.1.1, January 31, 2017

2.8 Other Documents

EUROCONTROL Radar Data Exchange (ASTERIX) standard:

- Part 1, All-purpose structured EUROCONTOL Radar Data Exchange, Reference 005-1-93.
- Part 2, Transmission of Monoradar Data, Reference 005-2-93.
- Part 3, Transmission of Monoradar Weather Information, Reference 005-3-93.

MTR 95W0000071 Development Methodology for the Standard Terminal Automation Replacement System (STARS) Functional Performance Requirements, August 1995.

JDS:99:01 Raytheon memorandum “Anomalous Flights in MITRE Test Scenarios”, March 2, 1999.

LMTSS4 ERAM Tracking Accuracy and Stability Requirements, Version 3, August 28, 2004.

FY17 ATO Requirements - MODERATE v1.0 (Tailored NIST SP 800-53 Rev4) - (Updated 10/6/2016).

3 STARS Requirements

3.1 STARS States, Service Levels and Modes

The STARS States, Service Levels, and Modes of Operation are defined for each of the site types: Operational and Support.

3.1.1 Operational Sites

Operational Sites consist of the Automation Subsystem (TAS, Local Towers, Remote TRACONs and Remote Towers) and the Operational Site Support Subsystem. Resources within the Operational Sites may be in the On-Line, Off-Line, or in some cases, the Standby resource state.

The Automation Subsystem supports ATC Operational and System Operational Functionality. Multiple service levels are supported concurrently as illustrated in Figure 3-1 and 3-2. Included are the Full Service Level and Emergency Full Service Level (FSL and EFSL - each may be further divided into partitions A and B for test and cutover) and the Emergency Service Level (ESL). The site configuration may consist of FSL and ESL systems, or FSL and EFSL (dual FSL) systems. The air traffic controller at a TCP can interact with any one service level by selecting the corresponding mode for that TCW or TDW. Other TCW/TDW modes include training and Performance Verification (PV) variants of FS or ES. Operators at an MCW can select multiple views, including PRTA, PRTB or ES MCPs. Within FSL, MCP input defines whether each workstation in the FSL should interact with PRTA or PRTB. Similarly, within EFSL, MCP input defines whether each workstation in the EFSL should interact with PRTA or PRTB.

The Operational Site Support Subsystem provides CAS software maintenance support for the FSL, EFSL and ESL service levels and includes the Site Support Service Level (SSSL) functionality.

The Support Subsystem site type, operating as a standard
UNIX workstation using CAS, provide System Support Functionality for FSL, EFSL and ESL service levels. Support Subsystems have an operational and a test mode.

3.1.1.1 States and Recovery

3.1.1.1.1 Resource States

A resource state is an attribute of the resource that characterizes its condition (On-Line, Off-Line, or Standby) with respect to use in the system. When a resource is off-line, it is available for comprehensive diagnostic testing for resource verification or software testing. The Off-line resource state of FSL, with EFSL, is utilized within the Service Level Test Modes.

Except for non-concurrent redundant elements, major automation equipment (workstations, data processors, gateways, etc.) and individual service levels within each operational site **shall[STARS-SSD-00001]** be switchable to the On-Line or Off-Line resource state.

Any Automation Subsystem element (equipment and corresponding software) that is redundant to improve availability but cannot operate concurrently with the corresponding On-Line element

shall[STARS-SSD-00002] be switchable to either the On-Line, Off-Line, or Standby resource state.

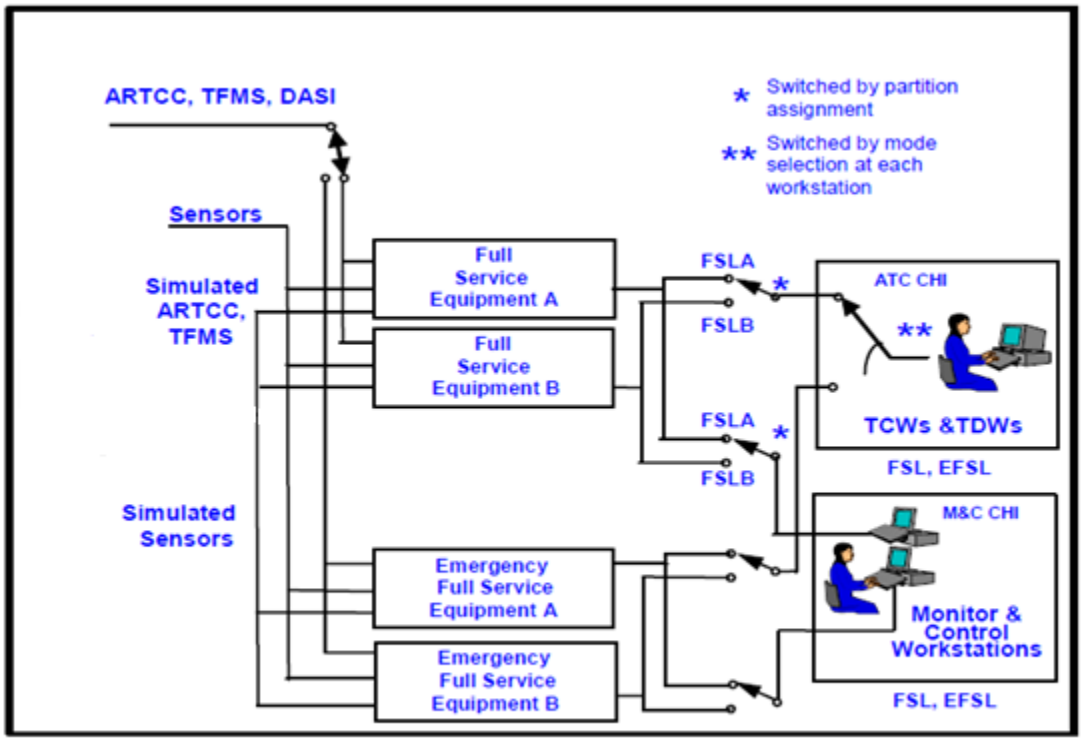

Figure 3-1 STARS Operational Site Service Levels and Modes of Operation - dual FSL System Configuration

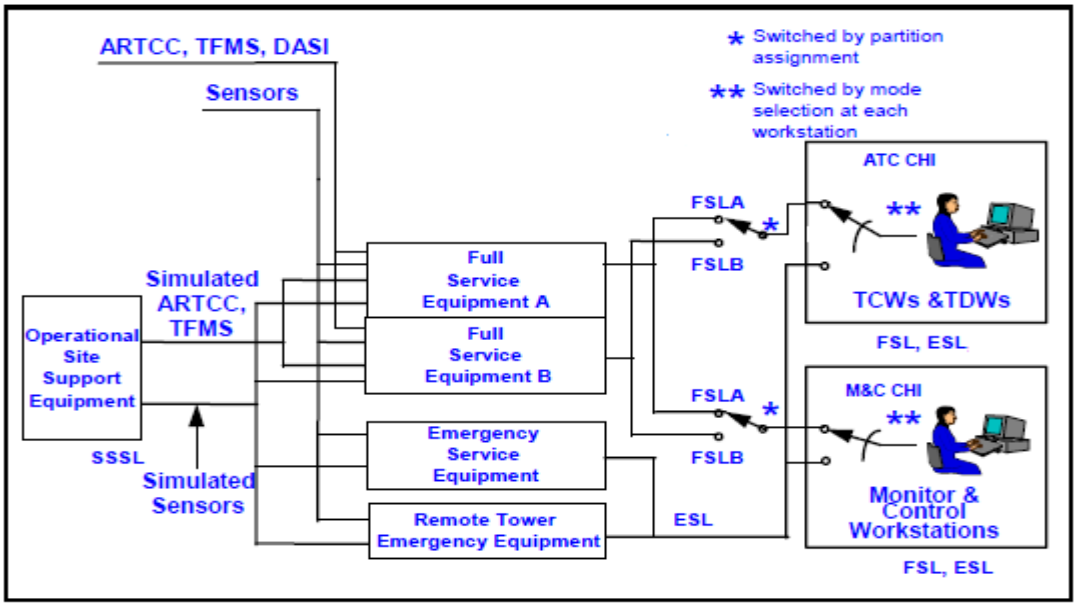

Figure 3-2 STARS Operational Site Service Levels and Modes of Operation - G1 or G2 System Configuration

3.1.1.1.2 Recovery

3.1.1.1.2.1 Recovery from Power Failure

Recovery from a power failure **shall[STARS-SSD-00003]** be automatic once power is restored.

3.1.1.1.2.2 Recovery from System Resource Failure

Reconfiguration of a resource from Standby to On-line **shall[STARS-SSD-00004]** be automatic upon failure of the corresponding On-line resource.

3.1.1.2 Service Levels

A service level is an indication of the functional and performance capability provided by STARS. Service levels operate concurrently and independently in STARS.

3.1.1.2.1 Concurrent Operation

Among the FSL, EFSL or ESL service levels (specified below); for each service level that is in its On-Line resource state, the Automation Subsystem **shall[STARS-SSD-00005]** concurrently provide the ATC Operational and System Operational functionality and performance (FSL, EFSL and ESL) required while maintaining the resource reserves described in Computer Resources (3.10).

The Operational Site Support Subsystem and Automation Subsystem **shall[STARS-SSD-00006]** operate concurrently.

3.1.1.2.2 Full Service Level (FSL)

The FSL includes the ATC Operational and System Operational Functionality capabilities and performance specified in sections 3.2.1.1 with reserves specified in section 3.10. FSL is divided into two variable-extent partitions, PRTA and PRTB, to support test and cutover between two versions of FSL software and/or hardware.

Each FSL partition in the Automation Subsystem **shall[STARS-SSD-00007]** accommodate FSL functionality while using live and simulated (from SSSL below) system inputs when in the On-Line resource state and simulated (from SSSL) system inputs when in the Off-Line resource state**.**

The Automation Subsystem **shall[STARS-SSD-00008]** accommodate separate instances of FSL software in two partitions: PRTA and PRTB.

The Automation Subsystem **shall[STARS-SSD-00009]** provide initiation of separate instances of STARS FSL automation subsystem software in PRTA and PRTB.

The Automation Subsystem **shall[STARS-SSD-00010]** accommodate FSL resources ranging from the minimum to all, within partition PRTA, with the remaining FSL resources allocated to PRTB.

MCP input **shall[STARS-SSD-00011]** select those FSL resources to be assigned to PRTA, with a default of “all”.

3.1.1.2.3 Emergency Service Level (ESL)

The ESL includes the ATC Operational and System Operational capabilities and performance specified in section 3.2.1.2 with reserves specified in section 3.10.

The Automation Subsystem **shall[STARS-SSD-00012]** accommodate ESL functionality, using live and simulated (from SSSL below) system inputs, when ESL is in the On-Line resource state.

The Automation Subsystem **shall[STARS-SSD-00013]** accommodate ESL functionality using simulated (from SSSL) system inputs when ESL is in the Off-Line resource state**.**

3.1.1.2.4 Emergency Full Service Level (EFSL)

EFSL **shall[STARS-SSD-00014]** operate independently of FSL but function exactly like FSL unless specifically noted.

3.1.1.2.5 Site Support Service Level (SSSL)

The SSSL includes the System Support Functionality capabilities and performance specified in section 3.2.1.3.

The Operational Site Support Subsystem **shall[STARS-SSD-00015]** support SSSL, creating simulated system inputs from scenario generation tools for performance verification, test or training use by FSL or ESL in the Automation Subsystem.

3.1.1.2.6 Service Level Independence

ESL, FSL, and EFSL **shall[STARS-SSD-00016]** be implemented independently such that the software or adaptation of one service level can be switched without affecting operation of the alternate service level.

3.1.1.2.7 Service Level Interdependence

3.1.1.2.7.1 FSL/ESL

The requirements in this section apply only to a system that comprises FSL and legacy ESL. The requirements for a system that comprises FSL and EFSL are stated in section 3.1.1.2.7.2. FSL settings data will be periodically communicated to ESL so that upon switching from FSL to ESL a controller will find ESL settings to be correct and current. Where FSL settings do not apply exactly to ESL, ESL will apply the FSL settings to the extent reasonable.

Settings **shall[STARS-SSD-00017]** be transferred from FSL to ESL no less frequently than each 20 seconds.

Transferred settings **shall[STARS-SSD-00018]** be applied to ESL at the TCW/TDW if all the following conditions are met:

a. TCW/TDW is displaying FSL
b. TCW/TDW is not in Performance Verification Mode.
c. FSL and ESL are in the same service level mode.

Display Control Settings **shall[STARS-SSD-00019]** be preserved and used when switching from FSL to ESL.

A list containing up to 80 pairs of Aircraft Identification (ACID) and assigned discrete beacon code for active tracks (associated and disassociated) and pending flight plans owned at that TCW/TDW **shall[STARS-SSD-00020]** be transferred from FSL to ESL.

The ACID/beacon code list **shall[STARS-SSD-00021]** be transferred from FSL to ESL no less frequently than every 20 seconds.

The transferred ACID/beacon code list **shall[STARS-SSD-00022]** be applied to ESL at the TCW/TDW if the same conditions as shall[STARS-SSD-00018] above are met.

The Current System Altimeter setting **shall[STARS-SSD-00023]** be the latest valid setting from the altimeter reporting station adapted as the system altimeter for the TCP.

3.1.1.2.7.2 FSL/EFSL

FSL display settings data will be periodically communicated to EFSL. Where FSL settings do not apply exactly to EFSL due to differences in software or adaptation versions, EFSL will apply the FSL settings to the extent reasonable.

Display settings and the ACID/Beacon Code list **shall[STARS-SSD-00024]** be transferred from FSL to EFSL no less frequently than each 10 seconds.

Transferred display settings and ACID/Beacon Code data **shall[STARS-SSD-00025]** be applied to EFSL when eligible.

Display Control Settings **shall[STARS-SSD-00026]** be preserved and used when switching from FSL to EFSL.

A list containing up to 160 pairs of ACID and assigned discrete beacon code for active tracks and pending flight plans owned at that TCP **shall[STARS-SSD-00027]** be transferred from FSL to EFSL.

The Current System Altimeter setting **shall[STARS-SSD-00028]** be the latest valid setting from the altimeter reporting station adapted as the system altimeter for the TCP.

Upon switchover at a TCP from FSL to EFSL, owned flight plans at that position from FSL **shall[STARS-SSD-00029]**be created on EFSL as follows:

a. As local flight plans, with flight data from the last transfer interval
b. As unsupported or frozen data blocks if not updated by surveillance source
c. As frozen data blocks if beacon codes are non-discrete or primary only
d. As frozen data blocks if in some state of coast and with an alert condition
e. TSAS data for individual flights will not be synchronized between FSL and EFSL.

3.1.1.3 Modes

A mode is the manner, method, or way that a given resource behaves.

For each mode specified below, its scope (the resource to which it applies) is also specified. The following table summarizes the required modes for all Operational Site resources that require modes. Requirements regarding FS Workstation Mode also apply to EFSL Workstation Mode, unless otherwise stated.

Table 3-1 Summary of Required Operational Site Modes

Scope		Workstation Modes										
Subsystem	**Resource**	**Normal and Test**				**Training**				**Performance Verification**		**MCP**
		FS[2]	**ES**	**DSA[3]**	**DSF[4]**	**FS[2]**	**ES**	**DSA**	**DSF**	**FS[2]**	**ES**	
Automation	TCW	X[1]	X	X[3]	X[4]	X[1]	X			X[1]	X	X
Automation	TDW	X	X	X[3]	X[4]	X	X			X	X	X
		Service Level Modes										
		Normal				**Test**						
Automation	TCW	X				X						
Automation	TDW	X				X						

[1] FMA mode available
[2] FS workstation includes both FS and EFS modes which apply to both FSL and EFSL respectively, in the dual FSL configuration
[3] For STARS ELITE only, DSA mode is only available for selection at TCWs and LTDWs.
[4] For Full STARS only, DSF is only available at TCWs/TDWs in a Remote Location.

3.1.1.3.1 Full Service (FS) Workstation Mode

A TCW in FS Workstation Mode **shall[STARS-SSD-00030]** independently allow selection of FMA mode in which the specified FMA functions are available.

Each TCP **shall[STARS-SSD-00031]** independently allow selection of a FS mode in which the workstation functions in concert with PRTA or PRTB functions throughout the remainder of the Automation Subsystem and with SSSL functions in the Operational Site Support Subsystem.

The requirements regarding FS workstation mode also apply to EFS workstation mode throughout the SSD, unless otherwise noted.

3.1.1.3.2 Emergency Service (ES) Workstation Mode

Each TCP **shall[STARS-SSD-00032]** independently allow selection of a ES mode in which the workstation functions in concert with ESL functions throughout the remainder of the Automation Subsystem and with SSSL functions in the Operational Site Support Subsystem.

3.1.1.3.3 FS Training Workstation Mode

Each TCP **shall[STARS-SSD-00033]** independently allow selection of a FS Training mode in which the workstation functions in concert with FSL functions handling training data throughout

the remainder of the Automation Subsystem and with SSSL functions in the Operational Site Support Subsystem.

A TCW in FS Training Workstation Mode **shall[STARS-SSD-00034]** independently allow selection of an FMA mode in which the specified FMA functions handling training data are available.

A TCP in FS Training Workstation Mode **shall[STARS-SSD-00035]** independently allow TCP-specific ATPA commands to be entered.

3.1.1.3.4 ES Training Workstation Mode

Each TCP **shall[STARS-SSD-00036]** independently allow selection of a ES Training mode in which the workstation functions in concert with ESL functions handling training data throughout the remainder of the Automation Subsystem and with SSSL functions in the Operational Site Support Subsystem.

3.1.1.3.5 FS Performance Verification Workstation Mode

The FS MCP **shall[STARS-SSD-00037]** display the results of PV testing.

Any specified TCP **shall[STARS-SSD-00038]** support a FS PV mode in which the workstation provides data for evaluation of performance verification.

FS MCP input **shall[STARS-SSD-00039]** specify the TCP to be switched to FS PV mode.

A TCW in FS Performance Verification Workstation Mode **shall[STARS-SSD-00040]** independently allow selection of an FMA mode in which the specified FMA functions handling performance verification data are available.

A TCP in FS Performance Verification Workstation Mode **shall[STARS-SSD-00041]** independently allow TCP-specific ATPA commands to be entered.

3.1.1.3.6 ES Performance Verification Workstation Mode

Any specified TCW or TDW **shall[STARS-SSD-00042]** support an ES Performance Verification mode in which the workstation provides data for evaluation of performance verification.

ESL MCP input **shall[STARS-SSD-00043]** specify the TCW or TDW to be switched to ES Performance Verification mode.

The ESL MCP **shall[STARS-SSD-00044]** display the results of Performance Verification testing.

3.1.1.3.7 MCP Workstation Mode

Each TCP **shall[STARS-SSD-00045]** independently allow selection of a MCP mode in which the workstation provides MCP functionality.

When MCP input at a TCP in MCP mode switches it to a TCP mode, the associated TCP display **shall[STARS-SSD-00046]** automatically appear with no additional operator action.

3.1.1.3.8 MCP Views

Any workstation **shall[STARS-SSD-00047]** support multiple MCPs.

3.1.1.3.9 Service Level Modes

In the Normal mode, FSL and/or ESL **shall[STARS-SSD-00048]** receive live inputs and simulated inputs and be in the On-Line resource state.

In the Test mode, FSL and/or ESL **shall[STARS-SSD-00049]** receive only simulated inputs and be in the Off-line resource state.

The FSL and ESL MCP **shall[STARS-SSD-00050]** indicate when the corresponding service level is in test mode.

3.1.1.3.10 Direct Sensor Access (DSA) Mode

DSA mode will be available for selection in Normal mode and Test mode to provide targets for display to TCWs and LTDWs in the event that track data is not available from the RDP subsystem. Capabilities such as tracking, flight data processing, MSAW, MCI, and CA processing, TSAS as well as TCP commands that would normally be processed by the RDP will not be available at a TCP in DSA mode. Weather processing, local TCP display control commands and the altimeter setting command will be available at TCPs in DSA mode.

DSA mode will only be available in a STARS ELITE system.

A TCP **shall[STARS-SSD-00051]** independently allow selection of DSA mode in which the functionality specific to DSA will be available.

Up to 160 pairs of ACID and assigned discrete beacon codes for active tracks (associated and disassociated) and pending flight plans owned at that TCW/LTDW **shall[STARS-SSD-00052]** be available for DSA mode.

3.1.1.3.10.1 Weather Data Processing

In DSA mode weather data **shall[STARS-SSD-00053]** be accepted simultaneously from multiple surveillance systems.

In DSA mode weather data **shall[STARS-SSD-00054]** be made available for display.

3.1.1.3.10.2 Source Data for Pressure Correction

In DSA mode input altimeter settings for each altimeter reporting station **shall[STARS-SSD-00055]** be obtained from TCP input.

In DSA mode the current altimeter setting for each altimeter reporting station **shall[STARS-SSD-00056]** be the most recent valid input altimeter setting.

3.1.1.3.11 Direct Sensor Feed (DSF)

The Direct Sensor Feed (DSF) capability will provide a display mode in which radar target data is displayed at TDWs in a Remote Tower Location as well as TCWs in a Remote TRACON Location in the event that track data is no longer available from the TAS. The DSF capability includes a dedicated direct Short Range Radar (SRR) feed to a set of NUNIOS located in the Remote Location (Tower or TRACON), monitoring of the direct sensor interface and NUNIOs, and the use of the Direct Sensor Access (DSA) CHI at the remote TCP to display target data from that direct sensor feed.

Capabilities such as tracking, flight data processing, MSAW, MCI, and CA processing, TSAS as well as TCP commands that would normally be processed by the RDP will not be available. Weather processing, local TCP display control commands and the altimeter setting command will be available.

A remote TCP **shall[STARS-SSD-00057]** independently allow selection of DSF mode in which the functionality specific to the DSF capability (if adapted) will become available.

3.1.2 Support Sites (OSF, SCSC)

The support sites operate in a standard UNIX workstation and server mode of operation using CAS. The OSF and SCSC include equipment that replicates the Automation Subsystem and all of its modes of operation for testing purposes. Support Sites do not require modes. Testing of new versions of CAS or COTS at Support Sites is accomplished by use of the off line resource state.

3.1.3 STARS LITE

STARS LITE, is a Stand Alone Tower configuration of the STARS system. It provides Air Traffic Controllers (ATCSs) with improved surveillance capabilities within the airport traffic environment. Use of STARS LITE will aid ATCSs in more effectively handling air traffic workloads that are affected by airport congestion, a variety of aircraft performance characteristics, terrain, obstructions, complex runway configurations, and weather conditions. A certified STARS LITE system with CA, MSAW, MCI safety alert features extends an ATCS' ability to manage airspace through displayed weather and surveillance data rather than relying solely on visual contacts or pilot reports. The displayed data enables ATCSs in the tower cab to provide radar traffic advisories in accordance with FAAH 7110.65, *FAA Air Traffic Control Handbook*. STARS LITE, with the use of digital maps, enables ATCSs to see airspace boundaries as well as geographical features surrounding the airport. This mapping display facilitates locating and identifying arriving, departing, and over-flying aircraft.

STARS LITE, provides air traffic controllers with surveillance position information, aircraft beacon code, altitude, maps, range marks, and weather information. STARS LITE, provides maintenance personnel with capabilities to monitor the systems integrity.

The normal configuration of STARS LITE includes one TDW and a single FDIO input. There is no independent time source.

A standard COTS keyboard and trackball are used in place of the STARS DEC/keyboard/trackball hardware.

3.2 STARS Capabilities

This major section establishes requirements for the capabilities of STARS. A third-level section is dedicated to requirements for each of the site types: Operational and Support. ATC Operational, System Operational, and those System Support requirements relevant to Operational Sites are addressed in the Operational Sites section. System Support requirements appear in the OSF and SCSC sections.

3.2.1 Operational Sites

Operational Sites can operate autonomously to meet the immediate needs of the primary STARS mission which is to provide safe and efficient air traffic control. They rely on the support sites only for long-term support such as software upgrades and adaptation changes. They contain equipment and software to directly interface with the controllers and other operational personnel, providing the core STARS functionality. Their architecture is replicated for test and validation purposes in some of the support sites. This section therefore precedes the others and contains the majority of the STARS capability requirements.

A fourth-level section is dedicated to requirements for each service level defined in Section 3.1.

3.2.1.1 Full Service

The Full Service Level provides complete air traffic control functionality and is expected to be used most of the time at each STARS position.

Requirements that reference elements, actions, or performance only relevant to an IFDT interface (including but not limited to: Interfacility flight plans, arrival tracks, handoffs, handoff re-direction, handoff for flights with filed Air Route Traffic Control Center (ARTCC) flight plans, enabling or disabling IFDT data transfer, configure the IFDT interface, TFMS message transmission over the IFDT interface, IFDT ICD, VFR flight plan, message printout, update position from IFDT data, logical IFDT systems external interfaces, IFDT status, IFDT messages, IFDT data, ARTCC interfaces, host messages, transfer data to ARTCC, etc.) are applicable only when one or more IFDT interfaces are adapted and available.

Requirements that reference elements, actions, or performance only relevant to a TFMS interface (including but not limited to: TFMS message transmission, TFMS messages, TFMS track/full data block information, logical TFMS external interface, TFMS ICD, TFMS data, TFMS interfaces, TFMS external interface main and alternate feed, transfer data to traffic management, etc.) are only applicable when a TFMS interface is adapted and available.

3.2.1.1.1 ATC Surveillance

3.2.1.1.1.1 Multiple Surveillance Sources

Aircraft position, weather, test, and status data **shall[STARS-SSD-00058]** be accepted simultaneously from multiple surveillance systems.

3.2.1.1.1.2 Redundant Surveillance Interfaces

Surveillance data **shall[STARS-SSD-00059]** be accepted by both a primary interface and an identical backup automation system interface.

3.2.1.1.1.3 Surveillance Data Selection
Data **shall[STARS-SSD-00060]** be automatically selected from either the primary interface or the identical backup interface for each surveillance system.

3.2.1.1.1.4 Surveillance Target Types
Beacon and search target data **shall[STARS-SSD-00061]** be accepted.

Multilateration target reports from Mode S, ATCRBS, and ADS-B equipped aircraft **shall[STARS-SSD-00062]** be received via the ASDE-X to STARS interface.

Automatic Dependent Surveillance - Broadcast (ADS-B) target reports **shall[STARS-SSD-00063]** be received from the Surveillance Broadcast Service (SBS) Service Delivery Point (SDP) to STARS interface.

The system **shall[STARS-SSD-00064]** use a single instance of the data items in identical ADS-B reports received from multiple ADS-B Radio Stations for a given target.

ADS-B target reports that are not test targets with Latitude/Longitude falling outside of an adapted overall area of interest **shall[STARS-SSD-00065]** be eliminated from further processing by the STARS automation subsystem.

Wide Area Multilateration (WAM) target reports **shall[STARS-SSD-00066]** be received from the Surveillance and Broadcast Services (SBS) Service Delivery Point (SDP) to STARS interface.

3.2.1.1.1.5 Registration Error Correction
Registration error correction factors **shall[STARS-SSD-00067]** be applied to beacon and search targets.

3.2.1.1.1.6 Collimation Error Correction
Collimation error correction factors **shall[STARS-SSD-00068]** be applied to search targets.

3.2.1.1.1.7 Target Data Filtering
Targets that lie outside of a geographic area defined by adaptable parameters **shall[STARS-SSD-00069]** be discarded.

If no valid target altitude exists, the system **shall[STARS-SSD-00070]** use an adaptable parameter to determine whether the target satisfies the altitude eligibility criteria for the individual target filtering area.

If a sensor is in the declared failure state, search and beacon target messages from that sensor **shall[STARS-SSD-00071]** only be displayed in the TCP single sensor ground position, slant position, and slant position PAM display views, and filtered to prevent their use in ATC tracking.

3.2.1.1.1.7.1 ADS-B Target Data Filtering

Unless otherwise specified, the requirements in this section apply to ADS-B test target reports as well as aircraft target reports. Section 3.2.1.1.1.13 below specifies how test target reports are to be identified as such.

ADS-B target reports **shall[STARS-SSD-00072]** be discarded based on FSPEC, Report Version or Data Source Identifier not matching adaptation.

ADS-B target reports that are not test targets **shall[STARS-SSD-00073]** be discarded based on Link Technology if the link version is unknown, or not adapted, or the report is not based on ADS-B.

ADS-B target reports that are not test targets **shall[STARS-SSD-00074]** be filtered based on adaptation parameters for Time of Applicability (TOAp and TOAv) and Time of Message Reception (TOMR).

ADS-B target reports **shall[STARS-SSD-00075]** be discarded based on the following Target Address:

a. Address Qualifier other than:
    1. ADS-B target with ICAO 24-bit address
    2. ADS-B target with self-assigned temporary address
    3. Fixed Beacon
b. ADS-B Report with an "all zero" address

ADS-B target reports that are not test targets **shall[STARS-SSD-00076]** be discarded based on the Integrity and Accuracy Parameters defined in adaptation.

ADS-B target reports that are not test targets **shall[STARS-SSD-00077]** be discarded based on the Latitude and Longitude validity and the adapted area of interest.

ADS-B target reports **shall[STARS-SSD-00078]** be discarded based on the Data Source Qualifier not being in the adapted set.

ADS-B target reports that are not test targets **shall[STARS-SSD-00079]** be discarded based on the ADS-B Data Quality Parameter if all of the following conditions are true:

a. "Unknown Link Version #" flag is not set, and Link Version # is greater than 1.
b. Duplicate Address flag is not set.
c. Reported SDA value is less than what the adaptation specifies.

3.2.1.1.1.8 Coordinate Conversion

Target data from multiple surveillance systems **shall[STARS-SSD-00080]** be converted to a common coordinate system.

3.2.1.1.1.9 Mode C Altitude Pressure Correction

Validated Mode C altitude in beacon target reports below a transition altitude **shall[STARS-SSD-00081]** be corrected for barometric variations from the standard mean sea level pressure of 29.92 inches of mercury.

If use of the transition altitude table is adapted, the transition altitude **shall[STARS-SSD-00082]** be determined using an adaptable reference transition altitude, the altimeter setting, and the following:

Altimeter Setting		Transition Altitude (feet)
(inches of mercury)	(miliBars)	
0 – 27.91	0 - 945	Reference transition altitude + 2200
27.92 – 28.41	946 - 962	Reference transition altitude + 1700
28.42 – 28.91	963 - 979	Reference transition altitude + 1200
28.92 – 29.41	980 - 996	Reference transition altitude + 700
29.42 – 29.91	997 - 1013	Reference transition altitude + 200
>29.91	>1013	Reference transition altitude - 300

If use of the transition altitude formula is adapted, the transition altitude (At) in units of 100 feet **shall[STARS-SSD-00083]** be calculated using an adaptable reference transition altitude (Aref), the altimeter setting, ΔB = [(29.92) - (Altimeter setting)] and the formula:

$$At = Aref + Round\ [\Delta B*(9.25+0.13*\Delta B)]$$

For determination of inclusion of the target within geographic volumes and MSAW, the corrected altitude (A) in units of 2 feet, **shall[STARS-SSD-00084]** be calculated using the smoothed altitude (As) and the formula:

$$A = As – Round\ [50*\Delta B*(9.25+0.13*\Delta B)]$$

For all uses of Validated Mode C altitude except determination of inclusion of the target within geographic volumes and MSAW, the corrected altitude (A) in units of 100 feet **shall[STARS-SSD-00085]** be calculated using the received altitude (Ar) and the formula:

$$A = Ar – Round\ [\Delta B*(9.25+0.13*\Delta B)]$$

3.2.1.1.1.10 Source Data For Pressure Correction

The adapted surveillance/altimeter tiles **shall[STARS-SSD-00086]** include one to three adapted altimeter reporting stations.

Source data for pressure corrections **shall[STARS-SSD-00087]** be the current altimeter setting for the surveillance/altimeter tile in which the target report is currently located.

Altimeter settings for each altimeter reporting station **shall[STARS-SSD-00088]** be obtained in accordance with the TCP-selected altimeter setting method associated with that station as Automatic input, via the ABPE Interface or manual, via TCP Entry or Estimation.

Current altimeter settings for each altimeter reporting station **shall[STARS-SSD-00089]** be the most-recent valid input altimeter settings.

If reports from an ABPE data stream are missing after an adaptable time-out, the last valid value **shall[STARS-SSD-00090]** be used.

The current altimeter setting for each surveillance/altimeter tile **shall[STARS-SSD-00091]** be the arithmetic average of the current altimeter settings from each of the (one to three) altimeter reporting stations.

3.2.1.1.1.11 Permanent Echo Search Targets
Permanent echo search targets **shall[STARS-SSD-00092]** be detected and made available for display.

3.2.1.1.1.12 Parrot and Reference Transmitter Targets
Fixed beacon transponder targets **shall[STARS-SSD-00093]** be detected and made available for display.

Reference Transmitter target reports supplied by multilateration sensors **shall[STARS-SSD-00094]** be made available for display.

3.2.1.1.1.13 Test Targets
Test targets from surveillance systems **shall[STARS-SSD-00095]** be made available for display.

An ADS-B target report **shall[STARS-SSD-00096]** be processed as a test target if either of the following conditions is true:

a. Address Qualifier in the Target Address field indicates “Fixed Beacon”.
b. Address Qualifier in the Target Address field indicates “Self-Assigned Temporary Address” and the target address matches an adapted target address for the radio station from which the target report originated.

3.2.1.1.1.14 Reflected Beacon Target Suppression
False beacon targets due to main beam reflections from known reflecting surfaces **shall[STARS-SSD-00097]** be detected and suppressed, irrespective of adapted airport mask volumes.

3.2.1.1.1.15 Ringaround Beacon Target Suppression
False beacon targets received on side-lobes **shall[STARS-SSD-00098]** be detected and suppressed, irrespective of adapted airport mask volumes.

3.2.1.1.1.16 Surveillance Weather Messages
Weather data **shall[STARS-SSD-00099]** be made available for display.

3.2.1.1.1.17 Surveillance Weather Filtering
Weather messages **shall[STARS-SSD-00100]** be filtered to discard data that lie outside of a geographic area defined by adaptable parameters.

If a radar sensor is in the declared failure state, weather messages from the associated radar **shall[STARS-SSD-00101]** be filtered to prevent their use in weather processing and TCP display.

3.2.1.1.1.18 Weather Coordinate Conversion and Level Mapping
Weather data from multiple surveillance systems **shall[STARS-SSD-00102]** be converted to a common coordinate system.

The ASR and ARSR weather levels **shall[STARS-SSD-00103]** be mapped to the displayable weather levels according to the following table:

Mapping of ASR/ARSR Weather to Displayable Weather Levels		
Displayable Level	**ASR Level**	**ARSR Level**
1 (Light)	1	---
2 (Moderate)	2	Light
3 (Heavy)	3	Light/Medium
4 (Heavy)	4	Medium
5 (Extreme)	5	Medium/Heavy
6 (Extreme)	6	Heavy

When adapted for high azimuth spacing, ARSR weather picture extraction processing **shall[STARS-SSD-00104]** apply the angular values to radial reports listed in the following table:

High Azimuth Spacing Parameters		
Range Group Nmi	**Degrees**	**Fraction of Circle**
Min – 40	5.6	1/64
40 – 80	2.8	1/128
80 – 136	1.4	1/256
136 - 250	0.7	1/512

When adapted for low azimuth spacing, ARSR weather picture extraction processing **shall[STARS-SSD-00105]** apply the angular values to radial reports listed in the following table:

Low Azimuth Spacing Parameters		
Range Group Nmi	**Degrees**	**Fraction of Circle**
Min – 40	2.8	1/128
40 – 80	1.4	1/256
80 – 136	0.7	1/512
136 - 250	0.35	1/1024

The system **shall[STARS-SSD-00106]** apply an aging time to weather reports from ARSR radars.

The inclusion or exclusion, in the composite weather image, of weather data from each surveillance radar **shall[STARS-SSD-00107]** be a site-specific adaptation parameter.

3.2.1.1.1.19 Strobe Messages
Beacon and search strobe data **shall[STARS-SSD-00108]** be accepted and recorded.

3.2.1.1.1.20 Real Time Quality Control (RTQC) Messages
Beacon and search RTQC messages, including sector marks, **shall[STARS-SSD-00109]** be made available for system status monitoring and display with the exception that sector marks are never displayed.

3.2.1.1.1.21 Status and Radar Identification Messages
If available, sensor status messages and identification messages from all surveillance systems **shall[STARS-SSD-00110]** be made available for system status monitoring.

3.2.1.1.1.22 Sensor Data Counts
The number of target reports by target type and the number of target report errors **shall[STARS-SSD-00111]** be counted for each radar, multilateration surveillance, ADS-B system and made available for system status and performance monitoring.

3.2.1.1.1.23 Radar Message Errors
Errors in the data received from each surveillance system **shall[STARS-SSD-00112]** be detected and made available for system status and performance monitoring.

3.2.1.1.1.24 Surveillance Sensor Quality Filtering
Search target reports from an ASR-9 or an ASR-11 radar **shall[STARS-SSD-00113]** be discarded if they do not exceed the quality filter threshold (if any) adapted for that radar.

Surveillance-sensor-supplied accuracy estimates and quality indicator(s), if available, **shall[STARS-SSD-00114]** be used to discard, but record, any target report whose positional uncertainty is greater than a threshold adapted for that surveillance-sensor or is designated as questionable by the quality indicator(s).

3.2.1.1.1.25 Radar Confidence Filtering
Search target reports from an ASR-9 radar **shall[STARS-SSD-00115]** be discarded if they do not exceed the confidence filter threshold (if any) adapted for that radar.

3.2.1.1.1.26 Force Invalid Mode-C
Reports from aircraft targets containing any valid Mode C value of -1000 ft or less **shall[STARS-SSD-00116]** be processed as if they contained an invalid Mode C value.

3.2.1.1.1.27 Long Range Radar Run Length Filtering

Search target reports from a long range radar **shall[STARS-SSD-00117]** be discarded and counted if they do not fall within the maximum and minimum run length filter thresholds adapted for that radar.

3.2.1.1.2 ATC Tracking

3.2.1.1.2.1 Target Types

Search-only, beacon-only, radar-reinforced beacon, Multilateration, and ADS-B targets **shall[STARS-SSD-00118]** be tracked.

3.2.1.1.2.2 Beacon Target Loss

Tracking of beacon tracks **shall[STARS-SSD-00119]** continue using search-only targets during loss of beacon targets.

3.2.1.1.2.3 Single Sensor Source

Targets **shall[STARS-SSD-00120]** be tracked using reports from, as a minimum, a single sensor (surveillance system).

3.2.1.1.2.4 Multiple Sensor Sources

Targets **shall[STARS-SSD-00121]** be tracked using data received concurrently from multiple sensors (surveillance systems), including targets from multiple sensors for the same aircraft.

If Dynamic Bias Correction is enabled by MCP input, tracks **shall[STARS-SSD-00122]** be stitch-free regardless of target range, azimuth, or altitude.

The tracker **shall[STARS-SSD-00123]** be capable of accepting altitude data with an LSB weight of either 100 ft or 25 ft, as specified by the sensor adaptation data.

3.2.1.1.2.5 Adapted Geographic Areas

The system plane **shall[STARS-SSD-00124]** be divided into 2 nmi by 2 nmi adapted contiguous surveillance/altimeter tiles.

3.2.1.1.2.6 Selection of Surveillance Data

Each adapted surveillance/altimeter tile data **shall[STARS-SSD-00125]** include:

a. An adapted sensor preference hierarchy with sensors and altitude bands
b. The Conflict Alert inhibit indicator
c. The adapted magnetic variation at that location.

The set of sensors whose reports are eligible to initiate or update a track within the adapted altitude band of each adapted surveillance/altimeter data tile **shall[STARS-SSD-00126]** be the adapted sensor preference hierarchy and which will be used to determine preference of surveillance data in multi-sensor display view.

3.2.1.1.2.7 Surveillance Sensor Types

Qualifying targets received concurrently from both short and long-range radars, and from multilateration sensors **shall[STARS-SSD-00127]** be tracked.

When enabled via surveillance-sensor adaptation, tracking **shall[STARS-SSD-00128]** accommodate surveillance-sensor-supplied accuracy estimates if this data is available from the target report.

When surveillance-sensor-supplied accuracy estimates are not available, or the function is disabled tracking **shall[STARS-SSD-00129]** use the per-surveillance-sensor adapted default accuracy estimate values.

When a surveillance sensor has different accuracies as a function of its mode, tracking **shall[STARS-SSD-00130]** use per-surveillance-sensor, per mode adapted default accuracy estimate values.

3.2.1.1.2.8 Correlation

Correlation **shall[STARS-SSD-00131]** be performed on all targets received to determine whether the target corresponds to an existing track.

Correlation **shall[STARS-SSD-00132]** be inhibited for targets within an adaptable geographic volume, if the correlation represents an Identification Reporting Mode of Secondary Radar (Mode 3/A) code change below the code lock altitude.

The code lock altitude **shall[STARS-SSD-00133]** be an adapted offset above the adapted elevation of the airport associated with the volume.

3.2.1.1.2.9 Correlated Track Update

The position and velocity of the correlated track **shall[STARS-SSD-00134]** be smoothed and predicted using position data from eligible correlated target reports.

A target report from a sensor **shall[STARS-SSD-00135]** be inhibited from updating the correlated track if the time interval since the track was last updated has not exceeded the adapted minimum track-update interval for this sensor or the last sensor to update the track.

A target report from a sensor **shall[STARS-SSD-00136]** be inhibited from updating the correlated track if both of the following conditions apply:

a. The computed track-updating priority level for this report is less than the previous report that updated the track, or was eligible to update the track but was inhibited based on 3.2.1.1.2.9[STARS-SSD-00134]
b. The time interval since the track was last updated is less than the adapted scan rate for the last sensor whose report updated the track, or was eligible to update the track but was inhibited based on 3.2.1.1.2.9[STARS-SSD-00134]

An established search-only track **shall[STARS-SSD-00137]** be updated by any correlated target report from the adapted sensors within the surveillance/altimeter data tile with priority given to the preferred sensor.

The track-updating priority for a report from a sensor **shall[STARS-SSD-00138]** be computed based on sensor type, sensor preference and conditions for Standard (Terminal) Separation specified in STARS-SSD-02177.

3.2.1.1.2.10 Uncorrelated Track Update
The position and velocity of the uncorrelated track **shall[STARS-SSD-00139]** be predicted using previously determined position and velocity. A track being updated in this manner is "laterally coasting".

A track **shall[STARS-SSD-00140]** enter the lateral coasting state if it remains uncorrelated for a period of time that exceeds the adapted update rate for the last sensor to correlate with the track.

3.2.1.1.2.11 Consecutive Non-Correlations
Tracks that fail to correlate for an adaptable number of consecutive update cycles **shall[STARS-SSD-00141]** be inhibited from further updating.

3.2.1.1.2.12 Uncorrelated Hand-Off Track Update/Freeze
Based upon adaptation, an arrival/overflight tracks in handoff from an ARTCC/Adjacent TRACON that has acquired from an interfacility flight plan and has not correlated for more than an adaptable number of update cycles **shall[STARS-SSD-00142]** either be updated by that facilities Track Update (TU) messages or be frozen at the last displayed position.

3.2.1.1.2.13 Track Update Message Interruption
When TU messages are interrupted and recorrelation has not occurred, the track **shall[STARS-SSD-00143]** only be updated when TUs are again received or recorrelation occurs.

3.2.1.1.2.14 Automatic Track Initiation using Uncorrelated Target Reports
Target reports that do not correlate with an existing track **shall[STARS-SSD-00144]** automatically initiate a new track.

Automatic search track initiation on uncorrelated search reports from a sensor that is not the adapted preferred sensor **shall[STARS-SSD-00145]** be inhibited unless that sensor is adapted to the surveillance/altimeter data tile and to enable search-only track initiation.

3.2.1.1.2.15 Automatic Track Initiation and Update
Automatic track initiation on search-only targets **shall[STARS-SSD-00146]** be inhibited when the target position is inside adapted clutter areas, the track speed is above an adapted value, or the scan-to-scan change in speed exceeds an adapted threshold.

Track establishment on search-only target reports from a sensor **shall[STARS-SSD-00147]** be inhibited until m reports from that sensor during n consecutive scans have been received, where m is adaptable per-sensor between 2 and 4, and n is adaptable between m and 5.

Track establishment on search-only targets **shall[STARS-SSD-00148]** be delayed if the target speed is below an adapted minimum or the target has not moved a distance greater than d from the first report from that sensor, where d is a per-sensor adapted distance (range 0 to 1.5 nautical miles).

A delayed tentative search track **shall[STARS-SSD-00149]** be dropped if correlation after the nth scan is missed for an adapted number of total scans.

Promotion of a delayed tentative search track to the established state **shall[STARS-SSD-00150]** be inhibited until the reported target position has moved a distance greater than d from the first report received from that sensor.

An unassociated established search track **shall[STARS-SSD-00151]** be dropped if the track's speed falls below an adapted minimum value for an adapted number of seconds.

Established search track update using search only targets **shall[STARS-SSD-00152]** be inhibited if the update will cause the track to transition beyond an adapted maximum speed or if the scan to scan change in speed exceeds an adapted value.

Track establishment on beacon-only and radar-reinforced-beacon targets from a radar sensor **shall[STARS-SSD-00153]** occur when two consecutive reports for the target are received on two consecutive scans from that sensor.

Track establishment on beacon-only and radar-reinforced-beacon targets from a radar sensor **shall[STARS-SSD-00154]** be inhibited until M reports from that sensor during N consecutive scans have been received.

Track establishment on beacon-only and radar-reinforced-beacon targets from a radar sensor **shall[STARS-SSD-00155]** be delayed if the target has not moved a lateral distance greater than D from the first report from that sensor, where D is a per-sensor adapted distance.

A delayed tentative beacon track from a radar sensor **shall[STARS-SSD-00156]** be dropped if correlation after the Nth scan is missed for an adapted number of total scans.

Promotion of a delayed tentative beacon track from a radar sensor to the established state **shall[STARS-SSD-00157]** be inhibited until the reported target position has moved a distance greater than D from the first report received from that sensor, unless 2 consecutive target reports are received from the same sensor.

Track establishment on targets from a non-radar sensor **shall[STARS-SSD-00158]** be inhibited until M reports from that sensor during N consecutive update intervals have been received.

Track establishment on targets from a non-radar sensor that do not have a Mode 3/A code indicating an Alert Special Condition (SPC) **shall[STARS-SSD-00159]** be delayed if the target has not moved a lateral distance greater than D from the first report from that sensor.

A delayed tentative track from a non-radar sensor **shall[STARS-SSD-00160]** be dropped if correlation after the Nth update interval is missed for an adapted number of update intervals.

Promotion of a delayed tentative track from a non-radar sensor to the established state **shall[STARS-SSD-00161]** be inhibited until the reported target position has moved a distance greater than D from the first report received from that sensor.

Track initiation on targets from a non-radar sensor that have neither a Mode 3/A code nor a Mode C altitude **shall[STARS-SSD-00162]** be inhibited. This will prevent the possibility of establishing a second track for an already tracked target if such reports fail to correlate with the first track.

3.2.1.1.2.16 Altitude Track Update

Altitude for correlated tracks **shall[STARS-SSD-00163]** be smoothed and predicted using Mode C altitude data from correlated target reports.

Smoothed altitude, limited to within an adaptable tolerance of the reported Mode C altitude and then pressure corrected, **shall[STARS-SSD-00164]** be used for determination of inclusion of the target within geographic volumes.

An altitude stabilized track **shall[STARS-SSD-00165]** be determined when a counter for each track, being incremented by one for each track update with valid Mode C altitude data, reaches an adaptable threshold.

Pilot-reported altitude **shall[STARS-SSD-00166]** be cleared when the associated track is considered altitude-stabilized and display of Mode C altitude is not inhibited.

3.2.1.1.2.16.1 Airspace Violation (ASV) Monitoring

An associated arrival or departure track that has a valid altitude **shall[STARS-SSD-00167]** be monitored for predicted descent below the floor or climb above the ceiling of an adapted ASV monitor volume if the volume is enabled for ASV monitoring for the track's arrival or departure airport.

An ASV Alert **shall[STARS-SSD-00168]** be made available for display for any monitored arrival/departure track that is predicted to exit the floor/ceiling within an adaptable look-ahead time.

3.2.1.1.2.18 Missing/Unreasonable Mode-C Data

Altitude for tracks with Mode C altitude data that is missing or has altitude change rates that exceed an adaptable value **shall[STARS-SSD-00169]** be predicted using previously determined altitude data.

A track that has received at least one valid altitude report **shall[STARS-SSD-00170]** enter the Vertical Coast state upon receipt of invalid Mode C altitude data from any adapted sensor or, if adapted, upon the lack of any subsequent reports.

A vertically coasting track **shall[STARS-SSD-00171]** enter the Vertically-Coasted-Out state if no valid altitude report is received in an adaptable period of time.

3.2.1.1.2.19 Track Association
A correlated track **shall[STARS-SSD-00172]** be linked with a flight plan that is eligible for automatic acquisition or an associated track which is inhibited from updating.

3.2.1.1.2.20 Auto-Acquisition Eligibility
Discrete beacon code tracks and flight plans that satisfy adaptable geographic position and altitude criteria **shall[STARS-SSD-00173]** be eligible for automatic acquisition.

When a flight plan has an entry fix that has been adapted with a proximity criterion or an auto acquisition filter volume for the flight type, the track **shall[STARS-SSD-00174]** be eligible for association to the flight plan only if it is within the adapted proximity limit of the flight plan entry fix or it is within the auto acquisition constraint filter volume.

When a departure flight plan has an entry fix that has been adapted with a departure altitude limit or does not have an entry fix that corresponds to an adapted fix, or the adapted fix does not have any adapted constraints for departure flights, the track **shall[STARS-SSD-00175]** be ineligible for association to the flight plan if it has a valid altitude above the departure altitude limit or is located within the area that is currently displayed at the pending owner's TCP.

When a non-departure flight plan has an entry fix that has been adapted with an inbound altitude limit, or does not have an entry fix that corresponds to an adapted fix, or the adapted fix does not have any adapted constraints for non-departure flights, the track **shall[STARS-SSD-00176]** be ineligible for association to the flight plan if it has a valid altitude above the inbound altitude limit or it is located within the area that is currently displayed at the pending owner's TCP.

When no valid track altitude exists, the system **shall[STARS-SSD-00177]** use an adaptable parameter to determine if the track satisfies the altitude eligibility criteria for the individual automatic acquisition area.

The system **shall[STARS-SSD-00178]** support adapted auto acquisition constraint filters and adapted primary terminal area auto acquisition volumes.

3.2.1.1.2.21 Inhibit for Duplicate Codes
Automatic acquisition **shall[STARS-SSD-00179]** be inhibited for flight plans with duplicate beacon codes.

3.2.1.1.2.22 Non-Updating Tracks
Associated beacon tracks that are inhibited from updating **shall[STARS-SSD-00180]** remain eligible for automatic acquisition.

3.2.1.1.2.23 Adapted Beacon Codes
Automatic acquisition **shall[STARS-SSD-00181]** occur when the beacon code of the unassociated track matches a special automatic adapted beacon code.

3.2.1.1.2.24 Adaptable Flight Data

Flight data for special automatic acquisition **shall[STARS-SSD-00182]** be adaptable for each beacon code including aircraft identity, aircraft type, control position, scratch pad, and flight status.

If the control position data is not included in or derivable from the adapted flight data, then the association to the adapted flight plan data **shall[STARS-SSD-00183]** occur upon a manual initiate control action.

3.2.1.1.2.25 Tracks in Auto-Drop Area

An associated arrival track that is not excluded from Arrival Auto-drop processing and that enters an adapted auto-drop area **shall[STARS-SSD-00184]** be eligible for Arrival Auto-drop processing.

When a track has no valid altitude and is in an auto-drop area adapted to use pilot-reported altitude and that altitude has been entered, the system **shall[STARS-SSD-00185]** use the manually-entered pilot-reported altitude to determine whether the aircraft satisfies the altitude criteria for inclusion in the auto-drop area.

When a track has no valid altitude and pilot-reported altitude is either not present or is not being used, the system **shall[STARS-SSD-00186]** use an adaptable parameter per individual auto-drop area to determine whether the aircraft satisfies the altitude criteria for inclusion in the auto-drop area.

The adaptable parameters manually-entered pilot-reported altitude and no valid altitude data for each auto-drop area **shall[STARS-SSD-00187]** have default values assigned in adaptation.

A track at a TCW while in FMA mode that is marked as subject to Arrival Auto-drop processing **shall[STARS-SSD-00188]** be displayed as an associated track if using a fast update single sensor or unassociated track if using single radar or multi-sensor display input.

A track or a flight plan that is associated with a track that is marked as subject to Arrival Auto-drop processing **shall[STARS-SSD-00189]** be displayed as an unassociated track or be eligible for display as a disassociated flight plan respectively at TCPs that are not in FMA mode.

A track **shall[STARS-SSD-00190]** be excluded from Arrival Auto-drop processing if it is in hold and the Arrival Auto-drop area is adapted to not process tracks in hold, is under the control of another facility, or its ground speed or altitude exceeds an adapted value for this auto-drop area.

A track without a qualifying exit fix for the auto-drop area **shall[STARS-SSD-00191]** be excluded from Arrival Auto-drop processing unless the auto-drop area is adapted to allow aircraft to qualify regardless of exit fix.

3.2.1.1.2.26 Flight Plan Retention
A flight plan whose arrival track becomes subject to Arrival Auto-drop processing **shall[STARS-SSD-00192]** be retained until it is no longer associated with the track and an adapted period has elapsed from the time it became subject to Arrival Auto-drop processing.

Flight plans in a suspended status **shall[STARS-SSD-00193**] be retained indefinitely unless removed by explicit action.

When 90 seconds has elapsed after all TCPs have switched back from EFSL to FSL, and if the EFSL IFDT link is offline, the software **shall[STARS-SSD-00194]** delete all flight plans in EFSL and deconsolidate TCPs back to their default position.

3.2.1.1.2.27 Track Re-acquisition
A disassociated track inhibited from updating **shall[STARS-SSD-00195]** be eligible for automatic acquisition when it has a discrete beacon code.

3.2.1.1.2.28 Arrival Track Re-acquisition
An arrival track that exits from an adapted arrival auto-drop area **shall[STARS-SSD-00196]** be marked as not subject to Arrival Auto-drop processing.

An arrival track in an adapted arrival auto-drop area **shall[STARS-SSD-00197]** remain associated with its flight plan until the track drops or the flight plan is terminated.

Subsequent to the arrival track drop, the flight plan **shall[STARS-SSD-00198]** be inhibited from associating with any track that is inside the adapted arrival auto-drop area.

3.2.1.1.2.29 Interfacility Arrival Track Re-acquisition
An interfacility arrival track that has auto-acquired and subsequently exits radar coverage and is under control of an adjacent facility **shall[STARS-SSD-00199]** be disassociated and its flight plan retained for an adapted time period.

3.2.1.1.2.30 Disassociate Track
An associated departure track **shall[STARS-SSD-00200]** be disassociated from its flight plan when the track enters any of the adapted primary departure drop zone for the terminal area, unless the track is in hand-off status or is under control of the STARS facility.

An associated track changing from a discrete beacon code to a non-discrete beacon code contained within an adaptable set of beacon codes **shall[STARS-SSD-00201]** be disassociated from its flight plan, unless it was automatically unsuspended due to a beacon code mismatch, with the flight plan terminated in an adaptable time unless it reacquires or is in a suspended state.

The system **shall[STARS-SSD-00202**] use the manually-entered pilot-reported altitude to determine whether the aircraft satisfies the altitude criteria for inclusion in the departure drop zones when no valid track altitude exists.

The system **shall[STARS-SSD-00203]** use adaptable parameters, for manually-entered pilot-reported and no valid altitude, per individual departure drop zone to determine whether the aircraft satisfies the altitude criteria for inclusion in the departure drop zones. These parameters are to have predefined defaulted values.

An associated departure track **shall[STARS-SSD-00204]** be disassociated from its flight plan when the track enters any of the adapted secondary departure drop zone.

When not under the control of another facility a track **shall[STARS-SSD-00205]** be automatically disassociated from its flight plan and the flight plan placed in suspend status if its beacon code has changed to indicate a mismatch for an adaptable period of time within an adaptable timeframe following association after auto-acquisition.

An associated arrival or overflight track, that has never been owned by the STARS system, **shall[STARS-SSD-00206]** be disassociated from its flight plan if it enters a secondary drop zone that is adapted to be eligible to process these types of flight.

3.2.1.1.2.31 Airport Mask Volume

Airport Mask Volume processing is meant to modify non-primary target processing near the airport and has no impact on primary target processing. A non-primary target may be a report from a non-radar sensor such as ADS-B or multilateration, or may be a beacon-only or a beacon-reinforced target report from a radar. The boundaries of the Airport mask volume polygon are expected to match or be within the airport perimeter or in areas of frequent beacon reflections. The ceiling of the Airport mask volume is expected to be lower than the floor of the adapted CA Approach Monitor Volume. A non-primary report that correlates with an existing associated track, for example, a flight that failed to meet arrival filter criteria, will not be discarded and the track will be updated as normal. All discarded reports are recorded.

A non-primary target report that is inside an adaptable airport mask volume, and has a qualifying Mode 3/A code and altitude, and does not correlate with an established track **shall[STARS-SSD-00207]** be discarded.

The altitude of a non-primary target report **shall[STARS-SSD-00208]** prequalify for an individual airport mask volume if it has a valid altitude below the adapted volume ceiling or the volume allows invalid altitude to qualify and the report has an invalid altitude.

The Mode 3/A code reply from a target **shall[STARS-SSD-00209]** qualify for airport mask volume filtering if it is not indicating an Alert SPC.

A track that is subject to airport mask volume processing **shall[STARS-SSD-00210**] only be updated by non-primary target reports.

An established track **shall[STARS-SSD-00211]** be marked as subject to airport mask volume processing when the track correlates with a non-primary target report that has a qualifying Mode 3/A code and is inside an airport mask volume with either a valid altitude or an invalid altitude with the volume set to accept invalid altitudes.

Tracks that are marked as subject to airport mask volume processing, and are unassociated or marked as subject to Arrival Auto-drop processing, **shall[STARS-SSD-00212]** be displayed at a TCW in FMA mode or a TCP not in FMA mode only if display of these tracks is enabled.

A track **shall[STARS-SSD-00213]** be marked as not subject to airport mask volume processing when the track correlates with a non-primary target report that has either a non-qualifying Mode 3/A code or a valid altitude below the adapted volume ceiling or an invalid altitude with the volume set to accept invalid altitudes.

A non-primary target report that correlates with a track that is subject to airport mask volume processing, and which provides a positive indication that the aircraft has landed, **shall[STARS-SSD-00214]** cause the track to be dropped.

A track **shall[STARS-SSD-00215]** be dropped if it has remained unassociated or subject to Arrival Auto-drop processing as well as in an airport mask volume processing for a period of time that exceeds the adapted drop time for the airport mask volume.

3.2.1.1.2.32 ASR-9/ASR-11 Track Eligibility

ASR-9 or ASR-11 search target track eligibility field processing **shall[STARS-SSD-00216]** be enabled or inhibited per radar using an adaptation parameter.

If track eligibility processing is enabled for a radar, then adapted values of the search target track eligibility field **shall[STARS-SSD-00217]** be used to determine that a search target is allowed to initiate a new search track, update a tentative search track, update an established search track, or update an established beacon track.

If track eligibility processing is enabled for a radar, then an unassociated established search track **shall[STARS-SSD-00218]** be dropped if not updated by adapted values of the track eligibility field in an adapted number of scans.

3.2.1.1.2.33 Target Processing Volumes

Adaptable target processing volume polygons **shall[STARS-SSD-00219]** be defined using latitude / longitude coordinates plus associated floor and ceiling altitudes along with an enable / inhibit parameter.

Track initiation, tentative track update, established track update, and track drop rules **shall[STARS-SSD-00220**] be applied individually to each target processing volume.

3.2.1.1.2.34 ASR-9 Beacon Hits Processing

If Mode S mode is active for an ASR-9 radar, then per-radar adapted Beacon Hit Count values **shall[STARS-SSD-00221]** be used to determine whether a beacon-only or a radar-reinforced-beacon target is allowed to initiate a new or update a tentative beacon track.

3.2.1.1.3 ATC Conflict Alert (CA) / Mode-C Intruder (MCI)

Conflicts are detected between all associated Mode C altitude reporting aircraft track pairs (CA) and also between all associated/unassociated Mode C altitude reporting aircraft track pairs (MCI). Conflict Alerts inhibited by assigned altitude conformance will be modeled after the processing described in NAS-MD-674.

A flight-plan associated tracked aircraft that is marked as subject to Arrival Auto-drop processing **shall[STARS-SSD-00222]** be monitored for conflicts as if it was unassociated.

3.2.1.1.3.1 Conflict Alert Surveillance Sources

Conflicts **shall[STARS-SSD-00223]** be detected for track pairs when the tracks' position data are generated from single or multiple surveillance sensors.

3.2.1.1.3.2 CA/MCI Look-Ahead Time

Look-ahead time for predicted conflicts **shall[STARS-SSD-00224]** be adaptable up to a maximum of 120 seconds.

3.2.1.1.3.3 Conflict Alert Parameters

All conflict alert parameters that define separation and geographic criteria, as well as the lower boundary of an Approach Monitor Volume **shall[STARS-SSD-00225]** be adaptable.

Adaptation **shall[STARS-SSD-00226]** specify the safe vertical separation distance to be used by Conflict Alert Assigned Altitude Inhibit Processing for inhibiting conflicts between track pairs.

Conflict Alert Assigned Altitude Inhibit Processing **shall[STARS-SSD-00227]** be enabled/disabled via adaptation.

3.2.1.1.3.4 Current Conflict

Conflicts **shall[STARS-SSD-00228]** be detected using current track position and altitude data.

3.2.1.1.3.5 Predicted Conflict

Conflicts **shall[STARS-SSD-00229]** be detected using predicted track position, assigned altitude, altitude, and altitude change rate data.

Predicted conflicts **shall[STARS-SSD-00230]** be suppressed in Type I and Type II suppression zones and using assigned altitude with Conflict Alert Assigned Altitude Inhibit Processing based upon adaptation.

3.2.1.1.3.6 Maneuvering Conflicts

Conflicts **shall[STARS-SSD-00231]** be detected for maneuvering aircraft using track position, track velocity, turn indication, altitude, assigned altitude, and altitude change rate data.

3.2.1.1.3.7 Parallel Approach Conflicts

Conflicts **shall[STARS-SSD-00232]** be detected between aircraft pairs on parallel approach in airport areas adapted for parallel runways.

3.2.1.1.3.8 Conflict Alert Areas
Conflict alert parameters **shall[STARS-SSD-00233]** be adaptable in three-dimensional geographic volumes.

Type I, II & III volumes **shall[STARS-SSD-00234]** be adaptable with all remaining areas defaulted to Type III if non adapted and Type IV if at least one is adapted.

The following CA parameters **shall[STARS-SSD-00235]** be separately adaptable for each of the four types of volume:

a. Lateral positional tolerances
b. Vertical positional tolerances
c. Lateral separation thresholds
d. Convergence thresholds
e. Look ahead times (types I & II combined)

The separation parameters to be used for a pair of tracks **shall[STARS-SSD-00236]** be selected based on their corresponding geographic volumes, with exception of both tracks being in Type I or II of different airports.

3.2.1.1.3.9 Output Conflicts
Detected conflicts **shall[STARS-SSD-00237]** be made available for display.

3.2.1.1.3.10 Conflict Reporting Duration
Conflicts **shall[STARS-SSD-00238]** be reported for an adapted minimum duration time.

3.2.1.1.3.11 Alert Data
Alert data for a conflict presented at multiple TCPs **shall[STARS-SSD-00239]** be identical at all positions.

3.2.1.1.3.12 Event Display
Reports of conflict alerts **shall[STARS-SSD-00240]** be made available for ATC operational event display at the MCP.

3.2.1.1.3.13 CA/MCI Detections
Conflicts **shall[STARS-SSD-00241]** be detected between Mode C altitude reporting aircraft track pairs where one or both tracks are associated and the Mode C altitude for both tracks is considered Stabilized.

A track pair with at least one associated track that is in a coasting state which concurrently has an active conflict alert **shall[STARS-SSD-00242]** remain in alert until target reports are received which bring both tracks out of the coasting state and the track pair out of the alert condition.

If at least one track of a pair is associated and laterally coasts out while a conflict alert condition exists, and the track(s) is(are) not in a filter adapted to inhibit freezing of tracks in conflict alert, the coasted out track(s) **shall[STARS-SSD-00243]** be frozen at the last displayed position with

the alert condition continuing to be displayed in the data blocks of both tracks and in the LA/CA/MCI list.

A conflict alert condition for an associated track pair or a frozen associated track of an associated/unassociated track pair **shall[STARS-SSD-00244]** cease to be displayed if target reports are received that result in the track pair no longer being in a conflict alert condition.

Controller input to terminate a frozen track in conflict alert with another track **shall[STARS-SSD-00245]** remove the terminated track from the display, and either continue to display the alert if the other track is also frozen or remove the alert if the other track is not frozen or previously been terminated.

3.2.1.1.3.14 Suspended Track Conflicts
If a suspended track goes into conflict, it **shall[STARS-SSD-00246]** be unsuspended automatically.

3.2.1.1.3.15 Aural Alarm Geographic Volumes
An aural alarm **shall[STARS-SSD-00247]** sound for a conflict violation on aircraft within an adaptable aural alarm geographic volume unless inhibited.

3.2.1.1.3.16 Aural Alarm Control Volume
The aural alarm **shall[STARS-SSD-00248]** be inhibited or enabled for conflict violation on tracks in adaptable aural alarm control volumes satisfying the adaptable conditions associated with the volume.

3.2.1.1.3.17 Military Alert Suppression Zones (MASZ)
Reports of conflicts **shall[STARS-SSD-00249]** be inhibited if each track is within an enabled and adaptable MASZ for this conflict type and both tracks qualify for the same or different zones.

3.2.1.1.4 ATC Final Monitor Aid
The requirements specified in this section, as well as FMA requirements throughout sections 3.2 and 3.13, apply at a TCW that is in FMA mode.

3.2.1.1.4.1 Active Monitored Zone (AMZ)
FMA provides enhanced display monitoring and automated alert generation for flights on final approach to a selected Active Monitored Zone (AMZ). Elements of an AMZ are depicted in Figure 3.2.1.1.4-1.

The TAS **shall[STARS-SSD-00250]** support an adaptable AMZ, with at least the following adaptable parameters for parallel approach runway configurations within the Terminal Area:

a. Approach Course Orientation
b. Boundary vertex points
c. Vertical extent
d. Runway end points
e. No Transgression Zone(s) (NTZ)
f. Normal Operating Zones (NOZ)

g. Approach Course Line length
h. Departure Course Line length
i. Lateral distance offset from approach course line to runway approach threshold
j. Longitudinal distance offset from approach course line end point to runway approach threshold
k. Visual elements as depicted in Figure 3.2.1.1.4-1.

When an AMZ is activated in FMA mode, the adapted visual elements of the AMZ **shall[STARS-SSD-00251]** be displayed.

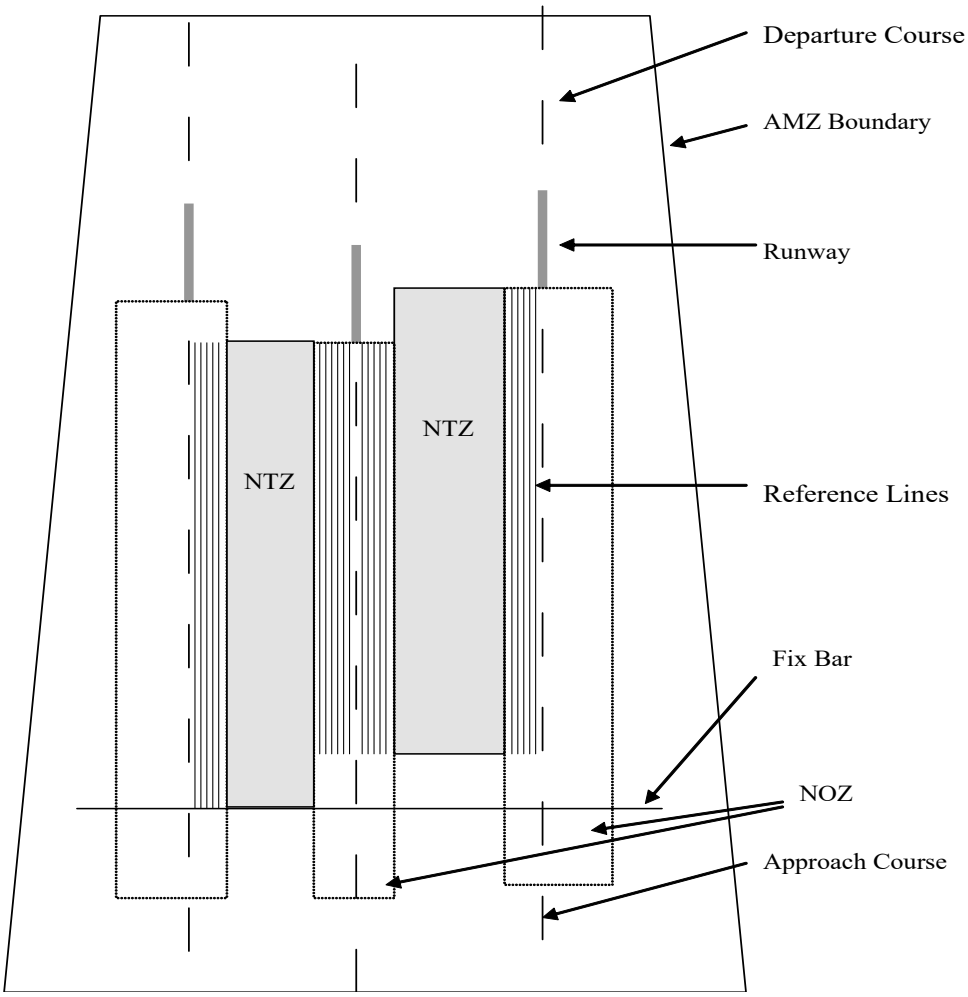

Figure 3.2.1.1.4-1 AMZ with Three Parallel Runways.

Note: The figure is a schematic representation of an AMZ incorporating three parallel runways.

3.2.1.1.4.2 No Transgression Zone (NTZ)
The location and dimensions of the NTZ **shall[STARS-SSD-00252]** be adaptable, with default orientation such that it is aligned with the adapted approach course orientation.

When FMA alert processing is enabled, the NTZ outline **shall[STARS-SSD-00253]** be represented on the FMA display with a solid line in a color that indicates the current NTZ alert state.

3.2.1.1.4.3 Normal Operating Zone (NOZ)
The location and dimensions of the NOZ **shall[STARS-SSD-00254]** be adaptable, with the default parameters such that it is a volume of airspace around the final approach course centerline and not a part of any enabled NTZ.

3.2.1.1.4.4 Track Eligibility
A track **shall[STARS-SSD-00255]** be eligible for monitoring by FMA when its last reported position is within an AMZ, unless FMA processing has been inhibited for that track or for all tracks.

3.2.1.1.4.5 FMA Warning Alert
For each eligible track, an FMA Warning alert **shall[STARS-SSD-00256]** be generated when the corresponding aircraft enters an NTZ from the NOZ associated with its assigned runway.

3.2.1.1.4.6 FMA Caution Alert
For each eligible track, an FMA Caution alert **shall[STARS-SSD-00257]** be generated when the corresponding aircraft is predicted to enter an NTZ from the NOZ associated with its assigned runway.

3.2.1.1.4.7 FMA Surveillance Alert
For each eligible track having an assigned runway corresponding to one of the AMZ parallel runways, an FMA Surveillance alert **shall[STARS-SSD-00258]** be generated when the track has not correlated for an adaptable period of time.

3.2.1.1.4.8 FMA Track Stabilization
The Track Stabilization algorithm employs two adaptable thresholds, FMA Stabilization and FMA Lost Stabilization, against which a stabilization timer for each track and each runway in the active AMZ is compared. The FMA Stabilization Threshold is an adaptable upper limit. When the stabilization timer reaches it, the track is considered stabilized and the timer is precluded from incrementing further. The FMA Lost Stabilization Threshold is a lower limit at or below which the track is no longer considered stabilized. Each timer is also prevented from decreasing below zero.

A track **shall[STARS-SSD-00259]** be considered to be stabilized on approach to a runway when each of the following conditions are true, and remain true, for an adaptable length of time within a moving timeframe:

a. The track's position is within the adapted FMA Approach Course Distance of the approach course center line of the runway.
b. The track's heading is within the adapted FMA Approach Course Angle of the approach course heading of the runway.

3.2.1.1.4.9 FMA Runway Alert
For each eligible track, an FMA Runway alert **shall[STARS-SSD-00260]** be generated when a track has been determined to be stabilized on an approach and the assigned runway for the aircraft is different, invalid, or not assigned.

3.2.1.1.4.11 FMA Enable/Disable
FMA alerting **shall[STARS-SSD-00261]** be enabled and inhibited by TCP input for an individual track, an individual TCW, or an individually designated NTZ of the active AMZ.

3.2.1.1.4.12 Activate/Deactivate Zone
The FMA Active Monitored Zone **shall[STARS-SSD-00262]** be selected by TCP input for each FMA-enabled TCW.

3.2.1.1.4.13 Event Display
Reports of FMA alerts **shall[STARS-SSD-00263]** be made available for ATC operational event display at the MCP.

3.2.1.1.4.14 Simultaneous FMA Alerts
When a track condition is such that multiple alert conditions apply, the single highest priority FMA alert **shall[STARS-SSD-00264]** be indicated based upon the following list from highest to lowest:

a. Warning
b. Surveillance
c. Runway
d. Caution

3.2.1.1.4.16ATC Approach Runway Verification (ARV)
An arriving flight **shall[STARS-SSD-00265]** be eligible for ARV monitoring when its track position is within an adapted ARV monitoring volume for a specified airport and runway based on site adapted criteria.

TCP input **shall[STARS-SSD-00266]** enable or inhibit ARV monitoring at a TCP or for a designated track.

TCP input **shall[STARS-SSD-00267]** toggle the status of a specified runway between open and closed.

The system **shall[STARS-SSD-00268]** display an ARV caution alert or wrong surface alert for an eligible track at a TCP where ARV monitoring is enabled when any of the following conditions are true:

a. An eligible track's destination airport does not match the airport associated with the ARV monitoring volume.
b. An eligible track's assigned runway does not match any runway associated with the ARV monitoring volume.
c. An eligible track with stabilized heading is aligned with a runway (associated with the ARV monitoring volume) that does not match its assigned runway.

d. An eligible track with stabilized heading is not aligned with any runway (associated with the ARV monitoring volume).

The system **shall[STARS-SSD-00269]** display an ARV caution alert or wrong surface alert for an eligible track based on adapted distance criteria for how far the track has penetrated the ARV monitoring volume.

The system **shall[STARS-SSD-00270]** display an ARV closed runway alert for an eligible track at a TCP where ARV monitoring is enabled when any of the following conditions are true:

a. An eligible track with stabilized heading is aligned with a closed runway (associated with the ARV monitoring volume).

If adapted for the TCP, the system **shall[STARS-SSD-00271]** generate an ARV aural alarm with an ARV alert.

The system **shall[STARS-SSD-00272]** force display of a full data block for a track in ARV alert.

TCP input **shall[STARS-SSD-00273]** acknowledge an ARV alert/alarm at the entering TCP only.

The system **shall[STARS-SSD-00274]** display a warning indication if an arrival flight is assigned to a closed runway.

3.2.1.1.5 ATC Minimum Safe Altitude Warning (MSAW)

Tracked aircraft that are flight-plan associated and are not marked as subject to Arrival Auto-drop processing **shall[STARS-SSD-00275]** be eligible for minimum safe altitude monitoring.

3.2.1.1.5.1 Altitude Source

Mode C tracked aircraft **shall[STARS-SSD-00276]** be monitored for conflict with terrain and obstructions.

The altitude data used by the MSAW function **shall[STARS-SSD-00277]** be generated from the Stabilized Mode C reported altitude or from the manually-entered pilot altitude when Stabilized Mode C data from the aircraft is not available.

A vertical or lateral coasting track that was in MSAW alert before coasting began, or enters MSAW alert while coasting, **shall[STARS-SSD-00278]** remain in alert until a target report is received which brings the track out of the alert condition.

If a track that is currently in MSAW alert laterally coasts out, and is not in a filter adapted to inhibit freezing of tracks in MSAW alert, the track **shall[STARS-SSD-00279]** freeze on the display with the alert condition continuing to be displayed in the data block and in the LA/CA list until either a target report is received which correlates with the track and brings the track out of the alert condition, or the track is terminated by controller input. If the track vertically coasts out and the track is not currently in lateral coast, the alert will cease.

3.2.1.1.5.2 Vertical Profile
Tracked aircraft **shall[STARS-SSD-00280]** be monitored along a two-segment path using the track's smoothed altitude, limited to an adaptable tolerance of the reported Mode C altitude that is pressure corrected and predicted altitude, to compute a vertical profile and compare the profile against an adapted terrain map.

3.2.1.1.5.3 First Segment
The first segment **shall[STARS-SSD-00281]** begin at the track's current position and extend to a position predicted using the track's estimated altitude change rate and an adapted time parameter.

3.2.1.1.5.4 Second Segment
The second segment **shall[STARS-SSD-00282]** begin at the end of the first segment, extend to the altitude of the highest terrain or to an adapted time parameter, whichever occurs first and project the track's altitude using the greater of either the current vertical velocity, or an adapted climb angle.

3.2.1.1.5.5 Terrain Map Resolution
The resolution of the terrain map **shall[STARS-SSD-00283]** be adaptable to 0.5, 1 nmi, or 2 nmi.

3.2.1.1.5.6 Terrain Map Data
The source of terrain map data **shall[STARS-SSD-00284]** be a grid of government furnished elevation data oriented to true north with x-y offsets referenced to a site specific lat/long location as defined by the SIFA.

3.2.1.1.5.7 Monitor Approach Altitude
Tracked aircraft smoothed altitude, limited to an adaptable tolerance of the reported Mode C altitude that is pressure corrected, **shall[STARS-SSD-00285]** be monitored for conflict with terrain or obstructions along adaptable approach paths.

3.2.1.1.5.8 Monitor for Altitude Boundary
On adaptable approach paths, tracked aircraft smoothed altitude, limited to an adaptable tolerance of the reported Mode C altitude that is pressure corrected, **shall[STARS-SSD-00286]** be monitored for both descent below and predicted decent below an adaptable slope defining current altitude violations.

A flight **shall[STARS-SSD-00287]** be processed for approach monitor alerts from its current position to its position at the adapted look-ahead time, taking into account all monitor volumes on this path.

Each adaptable monitor volume **shall[STARS-SSD-00288]** be comprised of a Type I or Type II Airport Volume, or both.

3.2.1.1.5.9 Aural Alarm Geographic Volume
An aural alarm **shall[STARS-SSD-00289]** sound for a low altitude violation on associated aircraft within an adaptable geographic volume unless inhibited.

3.2.1.1.5.10 Aural Alarm Control Volume
The aural alarm **shall[STARS-SSD-00290]** be inhibited or enabled for low altitude violation on tracks in adaptable aural alarm control volumes satisfying adaptable conditions associated with the volume.

3.2.1.1.5.11 General Terrain Inhibit Volume
Reports of low altitude violations **shall[STARS-SSD-00291]** be inhibited for tracks within an adaptable geographic volume.

3.2.1.1.5.12 Departure Inhibit Volume
Tracked departure aircraft in an adaptable departure inhibit geographic volume **shall[STARS-SSD-00292]** be suppressed from MSAW alert display if they are departures from the associated airport.

3.2.1.1.5.13 Low Altitude Alerts
Reports of low altitude violations **shall[STARS-SSD-00293]** be made available for display.

3.2.1.1.5.14 Identical Alerts
Low altitude alerts displayed at multiple TCPs **shall[STARS-SSD-00294]** be identical at all positions.

3.2.1.1.5.15 Alert Duration
Once a low altitude alert has been displayed at a TCP, it **shall[STARS-SSD-00295]** remain until the violation condition ceases.

3.2.1.1.5.16 Minimum Alert Time
An alert **shall[STARS-SSD-00296]** persist for an adapted minimum time duration.

3.2.1.1.5.17 Inhibit Codes
Reports of low altitude violations **shall[STARS-SSD-00297]** be inhibited for tracked aircraft with an adaptable beacon code, code segment or code block.

3.2.1.1.5.18 Event Display
Reports of low altitude violations **shall[STARS-SSD-00298]** be made available for ATC operational event display at the MCP.

3.2.1.1.5.19 Suspended Track Low Altitude Violations
If a suspended track goes into low altitude violation, it **shall[STARS-SSD-00299]** be unsuspended automatically.

3.2.1.1.5.20 Military Alert Suppression Zones
Reports of low altitude violations **shall[STARS-SSD-00300]** be inhibited if the track qualifies for an enabled MASZ that is adapted for MSAW.

3.2.1.1.6 ATC Converging Runway Display Aid (CRDA)

3.2.1.1.6.1 Target Reference
The target reference line **shall[STARS-SSD-00301]** be an adaptable vector that has its origin at the adaptable target reference point and is associated with a specific qualification region.

3.2.1.1.6.2 Image Reference
The image reference line **shall[STARS-SSD-00302]** be an adaptable vector that has its origin at the adaptable image reference point and is associated with a specific qualification region.

3.2.1.1.6.3 Qualification Region
The qualification region **shall[STARS-SSD-00303]** be an adaptable region defined by a horizontal polygon.

The altitude of the qualification region **shall[STARS-SSD-00304]** be bounded by either adapted constant altitudes or adapted distances parallel to the glideslope.

3.2.1.1.6.4 Application
An application **shall[STARS-SSD-00305]** include two qualification regions along with the associated target reference points and lines, and the associated image reference points and lines.

3.2.1.1.6.5 Track Eligibility
A track **shall[STARS-SSD-00306]** be eligible for CRDA when it is within an active qualification region and either its heading, data field values, or positions at the TCP equal values set in adaptation.

3.2.1.1.6.6 Ghosting Range Location
The ghost target **shall[STARS-SSD-00307]** be located in stagger or tie mode such that the distance of the ghost target to the image reference point along the image reference line equals the distance of the actual target to that same point or that same distance plus an adaptable distance respectively.

3.2.1.1.6.7 Ghosting Lateral Location
The ghost target **shall[STARS-SSD-00308]** be located such that the lateral relationship of the ghost target to the image reference line is the same as the relationship of the actual target to the target reference line.

3.2.1.1.6.8 Data Field Entries
Up to three data block or flight plan fields **shall[STARS-SSD-00309]** be adapted to qualify track eligibility or exclusion for CRDA ghost generation.

3.2.1.1.6.9 CRDA Enable/Disable
CRDA **shall[STARS-SSD-00310]** be enabled and disabled on command for each individual TCP.

3.2.1.1.6.10 Activate/Deactivate Application
Each individual qualification region within an application **shall[STARS-SSD-00311]** be activated and deactivated independently on command for each enabled TCP.

3.2.1.1.6.11 CRDA Ghost Data Block

The display of a ghost target **shall[STARS-SSD-00312]** include a leader line, an adaptable data block, and a position symbol separately adaptable for each CRDA application.

3.2.1.1.7 ATC Controller Automated Spacing Aid (CASA)

3.2.1.1.7.1 Automated Terminal Proximity Alerts (ATPA) Functionality

System adaptation **shall[STARS-SSD-00313]** specify the weight classes with their corresponding aircraft category and default landing speed as specified below:

Table 3.2.1.1.7-1 Weight Class (from light to heavy)

Weight Class	Aircraft Category (weight class character)	Default Landing Speed (knots)
SMALL	(blank)	124
LARGE	(blank)	135
B757	F	131
HEAVY	H	138
JUMBO	J	140

Site adaptation **shall[STARS-SSD-00314]** optionally specify adaptable parameters such as, but not limited to, those listed below:

a. Aircraft Category for a Small and/or Large weight classes
b. Default Landing Speed for each weight class
c. Weight Class, Exception landing speed and indicator for High Performance Turbo-prop per aircraft type
d. Minimum track ground speed to update current landing speed offset
e. Enable/Disable ATPA system wide
f. Enable/Disable ATPA Approach Volume per configuration
g. ACID's and Beacon Codes associated to ATPA and Distance Exclusions

Site adaptation **shall[STARS-SSD-00315]** support a number of ATPA Approach Volumes each of which is defined by, but not limited by the following:

a. A rectangular area with floor and ceiling altitude
b. A magnetic approach heading
c. Track Heading tolerance
d. Enable/Disable 2.5 nm Reduced Separation
e. Distance from the Runway Threshold for 2.5 nm Reduced Separation
f. ATPA Cone ineligibility parameters
g. ATPA Exclusion and Inclusion parameters
h. Controller positions to display ATPA data
i. Landing Speed Offset, Group Name, and time for reset
j. Indicator that VFR flights are eligible for the volume

A track **shall[STARS-SSD-00316]** be considered within an ATPA Approach Volume when all of the following conditions are true:

a. The track has been enabled via TCP entry to override ATPA qualification processing; or ACID/beacon code not excluded, track has an established altitude and the track has IFR, VFR on top or VFR status when in an adapted volume.
b. The track is not owned by the center or another facility
c. The track satisfies ATPA Inclusion and Exclusion parameters
d. The track position is laterally and vertically within that Approach Volume
e. The track is not frozen or coasting
f. The track is not a ghost, pseudo track, or unsupported track
g. The track is associated and not marked as subject to Arrival Auto-drop processing.

A track **shall[STARS-SSD-00317]** qualify for ATPA Cone processing if ATPA is enabled and the track is in an enabled Approach Volume.

An ATPA In-Trail track pair **shall[STARS-SSD-00318]** be determined for a trailing track and the closest lead track that meet the following criteria:
a. Both tracks qualify for ATPA Cone Processing in the same Approach Volume
b. The lead track is within 12 nmi of the trailing track
c. The lead track is +/- 90° from the heading of the trailing track.
d. Neither track is displaying "TRK" in the owner's data block.

Site adaptation **shall[STARS-SSD-00319]** specify the ATPA separation minimum using the weight classes of the In-Trail track pair.

If a track that qualifies for ATPA Cone Processing does not have a valid weight class, then the track **shall[STARS-SSD-00320]** be eligible to display an indication that a weight class is unavailable.

The ATPA separation minimum for an In-Trail track pair **shall[STARS-SSD-00321]** be set to the adapted separation minimum applicable to the weight classes / wake categories of the two tracks for the IFR Separation Category with the highest priority whose conditions are met as specified in table 3.2.1.1.7-2 plus any additional separation if adapted for formation separation and either track is a formation flight.

Table 3.2.1.1.7-2. IFR Separation Categories

Priority	Category	Condition(s)
Highest 1	Undefined	The trailing track's scratchpads match any ATPA Cone Ineligibility parameter in the respective adapted scratchpads for the ATPA Approach Volume.
2	Fused Track Increased Separation	Either track of the pair has been displaying "ISR" at the owner of the trailing track's display, preceding or succeeding qualification for the volume, and has continued to do so post-qualification for at least 10 seconds.

3	2.5 nmi Reduced Separation	All of the following are true: a. 2.5 nmi Reduced Separation is enabled for the volume b. Both tracks are located within a site-adaptable Distance from the Runway Threshold for 2.5 nmi Reduced Separation c. Either fused-track display view is selected or a terminal radar within 40 nmi of both tracks is selected at the owner of the trailing track's display.
4	Fused Track Standard Separation	Fused-track display view is selected.
5	Single Sensor Mode	A Multilateration sensor is selected or a radar sensor is selected and the track is within an adapted distance from the sensor.
6 Lowest	Multi-Sensor Mode	None of the above categories' conditions are met.

The radius of a TPA cone on a trailing track **shall[STARS-SSD-00322]** be changed to the current ATPA In-Trail separation minimum when the trailing track's TCP is eligible for ATPA and the current ATPA In-Trail separation minimum is greater than the TPA cone radius .

A TPA J-ring **shall[STARS-SSD-00323]** continue to be displayed when an ATPA Monitor Cone, ATPA Warning Cone or ATPA Alert Cone is displayed.

An ATPA Monitor Cone **shall[STARS-SSD-00324]** be eligible for display in the TPA color for a trailing track qualifying for ATPA Cone processing as long as the following conditions are met:

a. The In-Trail track pair has a current ATPA separation minimum
b. The track is not displaying a TPA Cone or an ATPA Warning or Alert Cone
c. The track is not displaying In-Trail Distance in the Caution color or ATPA Alert color.

The display of a TPA Cone **shall[STARS-SSD-00325]** be inhibited when the track is displaying an ATPA Warning or Alert Cone, or is displaying an ATPA In-Trail Warning or Alert condition.

A trailing track that qualifies for ATPA Cone processing **shall[STARS-SSD-00326]** be eligible for an ATPA In-Trail Warning condition when the predicted difference in distance between the two tracks within the ATPA Warning Look-ahead time is less than or equal to the separation minimum.

An ATPA Warning Cone or Alert Cone **shall[STARS-SSD-00327]** be displayed in the Caution color or Alert Color respectively for a track in an ATPA In-Trail Warning condition when the display of ATPA Warning and Alert Cones is enabled.

The ATPA Warning Cone **shall[STARS-SSD-00328]** be displayed for a minimum period of time specified by a site-adapted value unless it is replaced by an ATPA Alert Cone or no longer qualifies for ATPA Cone processing.

A trailing track that qualifies for ATPA Cone processing **shall[STARS-SSD-00329]** be eligible for an ATPA In-Trail Alert condition when the difference in distance between the two tracks is less than or equal to the separation minimum or is predicted to be so within the ATPA Alert Cone Look-ahead time.

The ATPA data **shall[STARS-SSD-00330]** be updated at each display based on the display's update rate.

The predicted location of a track for purposes of ATPA Warning Cone and ATPA Alert Cone processing **shall[STARS-SSD-00331]** use the track's current location, its current ground speed, and its predicted Landing Speed.

Unless it is suspended, a track **shall[STARS-SSD-00332]** display a FDB when the track is displaying a Warning/Alert Cone or In-Trail Warning/Alert condition.

The ATPA Monitor, Warning or Alert Cone **shall[STARS-SSD-00333]** be drawn as a circular sector with the origin at the trailing track position, a radius equal to the ATPA separation minimum for the track pair and the center of the arc oriented toward the location of the lead track.

A track **shall[STARS-SSD-00334]** qualify for ATPA In-Trail Distance processing if ATPA is enabled in the system and the track is in an enabled Approach Volume.

The display status of ATPA Monitor, Warning and Alert Cones as well as In-Trail Distance for a track **shall[STARS-SSD-00335]** be set to the current state for the TCP when the track no longer qualifies for an enabled ATPA Approach Volume for which it was qualified.

The Override of ATPA qualification processing conditions **shall[STARS-SSD-00336]** be cleared when the track no longer qualifies for an ATPA Approach Volume for which it was qualified.

3.2.1.1.7.2 Terminal Sequencing and Spacing (TSAS) Functionality

TSAS information is provided by the Time Based Flow Management (TBFM) interface and primarily consists of slot marker data for arriving flights, along with their scheduled and estimated times of arrival. When a TBFM interface is adapted and is online, the TSAS data is available for arriving flights. Incoming TSAS messages will be associated with tracks and flight plans based on the System Track Number and System Flight Plan Number included in the message. The controller at the TCW/TDW has controls regarding when and how the data is presented.

Site adaptation **shall[STARS-SSD-00337]** specify if TSAS is enabled or disabled system-wide.

TSAS system events **shall[STARS-SSD-00338]** be displayed at the MCW and recorded in the STARS message log.

Display of TSAS data for an individual position or flight **shall[STARS-SSD-00339]** be controlled by TCP command.

TSAS data for a flight **shall[STARS-SSD-00340]** be removed from display when the flight is qualified for an adapted Volume that is adapted to inhibit display of TSAS tools, and deleted from the system when no update from TBFM has been received for an adapted period of time.

Non-Timeline TSAS tools and data for a flight **shall[STARS-SSD-00341]** be removed from display when TBFM indicates they are invalid or RNP capability has been manually overridden.

3.2.1.1.7.2.1 Slot Marker Display

The slot marker for a flight **shall[STARS-SSD-00342]** be eligible for display in fused track display mode based on its TBFM-reported position, heading, and groundspeed, updated in synchronization with track updates.

When displayed, a slot marker airspeed **shall[STARS-SSD-00343]** be positioned adjacent to the corresponding track's slot marker.

When a slot marker is displayed for a flight for which TBFM reports a manually overridden PBN capability, the slot marker **shall[STARS-SSD-00344]** be displayed in an adaptable emphasis color.

When eligible for display, a slot marker and slot marker airspeed **shall[STARS-SSD-00345**] be displayed for flights with a full data block.

When eligible for display, a slot marker **shall[STARS-SSD-00346]** be displayed when a flight with a partial data block is in Dwell state.

3.2.1.1.7.2.2 Trajectory Display

Trajectory data for arrival flights will be provided to STARS from TBFM.

The trajectory for a flight **shall[STARS-SSD-00347]** be displayed graphically with estimated and scheduled trajectory information, and toggled on or off based on TCP entry.

3.2.1.1.7.2.3 Position Symbol Decorations

TCP input **shall[STARS-SSD-00348]** toggle on and off the display of the track's TBFM reported airspeed.

When displayed, TBFM reported airspeed **shall[STARS-SSD-00349]** be positioned adjacent to the corresponding track's position symbol.

3.2.1.1.7.2.4 Timeline Display

TCP input **shall[STARS-SSD-00350]** toggle on and off the display of a Timeline window that shows a sequence of flights scheduled to arrive at a specified adapted fix or runway, and the times it will take those flights to arrive.

While a track is in a Dwell State, a spacing bracket **shall[STARS-SSD-00351]** be displayed for the corresponding flight in the Timeline windows.

3.2.1.1.7.2.5 Control RNP Eligibility

When TSAS tools are available for a flight, and a TCP performs an action to change the RNP eligibility for that flight, the system **shall[STARS-SSD-00352]** issue an Event Notification message to TBFM indicating the desired RNP eligibility change.

3.2.1.1.7.2.6 Resequence Flights
When a TCP performs an action to resequence a series of flights with available TSAS tools, the system **shall[STARS-SSD-00353]** issue an Event Notification message to TBFM indicating the desired sequence change.

When a TCP performs an action to swap the sequence of two flights with available TSAS tools, the system **shall[STARS-SSD-00354]** issue an Event Notification message to TBFM indicating the desired sequence swap.

TCP input to modify the TSAS sequence data of a flight that is not controlled by the TCP **shall[STARS-SSD-00355]** be indicated at the flight owner's display.

3.2.1.1.7.2.7 Runway Change
If as a result of TCP input, the assigned runway for a flight with available TSAS tools no longer matches the runway supplied by TBFM, the system **shall[STARS-SSD-00356]** issue an Event Notification message to TBFM indicating the Manual Runway change.

3.2.1.1.8 ATC Flight Data Processing

3.2.1.1.8.1 Terminal Computer Identification Assignment (TCID)
A TCID number **shall[STARS-SSD-00357]** be assigned to received interfacility flight plans and TCP-entered VFR interfacility flight plans.

The system **shall[STARS-SSD-00358]** accept and process received messages from adjacent TRACONs with a TCID in either adapted format.

3.2.1.1.8.2 Beacon Code Banks
At least four adaptable banks of beacon codes, each containing an optional character for flight rules and a prioritized list of alternate banks **shall[STARS-SSD-00359]** be available for assignment to intrafacility flight plans.

3.2.1.1.8.3 Flight Data Time Default
When the Estimated Time of Arrival (ETA) or Proposed Time of Departure (PTD) is not provided with flight data entered at the TCP, the current system time **shall[STARS-SSD-00360]** be assigned as the ETA or PTD.

3.2.1.1.8.4 Flight Data Default
Default values for flight data, such as entry/exit fixes and flight type **shall[STARS-SSD-00361]** be assigned to a flight plan based on owning or entering TCP when the default value does not conflict with manually entered data.

3.2.1.1.8.5 Flight Plan Entered with TCP Specified

When a flight plan is entered with a TCP specified, the flight plan **shall[STARS-SSD-00362]** be assigned to that TCP or, if fully or basically consolidated, to the position that the specified position is consolidated to.

3.2.1.1.8.6 Flight Plan Entered with TCP Not Specified
When a flight plan is entered with no TCP is specified and no fix data is explicitly entered, the entering TCP **shall[STARS-SSD-00363]** be assigned the flight plan unless the entering position is consolidated in which case the rules of consolidation apply.

For a flight plan entered at the TCP using the non-implied form of the command, when no TCP is specified and both fixes are explicitly entered, the TCP to which the flight plan is assigned **shall[STARS-SSD-00364]** be obtained from the current configuration plan.

3.2.1.1.8.7 Interfacility Flight Plans
The TCP to receive a flight plan **shall**[**STARS-SSD-00365**] be determined by matching field elements in the Flight Plan message, selected via adaptation, to corresponding parameters that define current configuration and current consolidation.

The matching field elements, at a minimum, **shall[STARS-SSD-00366]** include altitude band(s), A/C type(s), Aircraft ID and Runway with corresponding alternative TCP assignments.

3.2.1.1.8.8 Flight Plan Creation for Formation Break-up
Separate flight plans **shall[STARS-SSD-00367]** be created by incrementing the formation flight leader's ACID and generating a new beacon code for each of the flight elements, when requested via input at the TCP.

3.2.1.1.8.9 Terminate Storage of Flight Plan Data
When a track is dropped by the system, storage of associated flight plan data **shall[STARS-SSD-00368]** be terminated.

When the active leg of an In-Out-In (IOI) flight plan is dropped and no other leg becomes active, then each of the remaining legs **shall[STARS-SSD-00369]** be dropped sequentially upon expiration of their deletion times, made up of the current or flight plan coordination time, plus a retention time, unless any leg has become active or suspended.

3.2.1.1.8.10 FDIO Interfacility Flight Data
FDIO interface data uniquely pairing an ACID with a discrete or non-discrete beacon code **shall[STARS-SSD-00370]** generate a flight plan. (STARS LITE only)

3.2.1.1.8.11 Interfacility Destination TCP Handoff
The destination TCP for an interfacility handoff **shall[STARS-SSD-00371]** be determined by matching field elements in the Flight Plan message, selected via adaptation, to corresponding parameters that define current configuration and current consolidation unless the TCP is specified in the initiate transfer message.

3.2.1.1.8.12 TCP Specified in Initiate Transfer Message

The TCP to be used as the destination TCP for an interfacility handoff **shall[STARS-SSD-00372]** be the TCP specified in the Initiate Transfer message or, if consolidated, the position that the specified TCP is consolidated to.

3.2.1.1.8.13 Handoff Redirection
Redirection of a handoff from an ARTCC, or an adjacent TRACON routed via the En Route automation system, to another TCP **shall[STARS-SSD-00373]** be accomplished without having to accept the handoff at the current TCP.

3.2.1.1.8.14 Intrafacility Handoff with TCP Input
The TCP to be used as the destination TCP for an intrafacility handoff **shall[STARS-SSD-00374]** be the TCP specified by TCP input or, if consolidated, the position that the specified position is consolidated with unless the position is limited consolidated and the command specifies otherwise.

3.2.1.1.8.15 Effect of Handoff Accept Action
Control of tracks and flight plan information **shall[STARS-SSD-00375]** be transferred to the handoff destination when a handoff accept action is taken on a flight that is in handoff status and is not controlled by the position performing the accept action.

When a handoff is accepted, the full data block at the position that owned the track prior to the handoff **shall[STARS-SSD-00376]** be displayed in the Data Block Owned/Previously Owned Blink Color for a site-adaptable period of time, after which it will be displayed in the Data Block Owned/Previously Owned Color.

3.2.1.1.8.16 Effect of Handoff Recall Action
When a handoff recall action is taken on a flight that is in handoff status and controlled by the position performing the action, the referenced flight plan **shall[STARS-SSD-00377]** be removed from handoff status.

3.2.1.1.8.17 Interfacility Handoff Manual Initiation/Acceptance
Transfer of control and display of tracks and flight information to and from an ARTCC or adjacent TRACON **shall[STARS-SSD-00378]** be performed for manually initiated/accepted interfacility handoffs when the handoff is accepted.

3.2.1.1.8.21 Overflight Rejection in Interfacility Manual Handoff
All interfacility handoff attempts of overflights **shall[STARS-SSD-00379]** be rejected when the reject option is set in adaptation.

3.2.1.1.8.22 Intrafacility Handoff Manual Initiation/Acceptance
Transfer of control and display of tracks and flight information within the TRACON **shall[STARS-SSD-00380]** be performed for manually initiated/accepted intrafacility handoffs when the handoff is accepted.

3.2.1.1.8.24 Handoff Via Implied Command Prohibition
Handoff acceptance actions performed via an implied command **shall[STARS-SSD-00381]** be prohibited when the track is not being updated with STARS radar information.

3.2.1.1.8.25 Handoff Prohibition when Track Outside Sensor Coverage
Handoff acceptance actions **shall[STARS-SSD-00382]** be prohibited when the referenced track is beyond an adaptable sensor coverage area.

3.2.1.1.8.26 Automatic Handoff for Flights With Filed ARTCC Flight Plans
Automatic initiation of interfacility handoffs **shall[STARS-SSD-00383]** be performed for departures and overflights when flight plan/track conditions match adapted parameters.

When so adapted for the site, flights with ARTCC VFR flight plans **shall[STARS-SSD-00384]** be disabled from automatic initiation of interfacility and intrafacility handoffs.

Adapted data that may be matched to initiate interfacility auto handoff to an adapted destination facility and optional sector **shall[STARS-SSD-00385]** include, but not limited to, the following:

a. Entry/exit fix pair
b. Airspace volume
c. Requested altitude band
d. Look ahead time to TRACON boundary
e. A/C type(s)

3.2.1.1.8.28 Intrafacility Handoff Auto-Initiation/Acceptance
Automatic intrafacility handoffs with automatic initiation/acceptance **shall[STARS-SSD-00386]** be performed for any flight.

3.2.1.1.8.30 Conditions for Intrafacility Handoff Auto-Initiation/Acceptance
Automatic initiation or acceptance of an intrafacility handoff **shall[STARS-SSD-00387]** occur when flight plan/track conditions match adapted parameters.

The system **shall[STARS-SSD-00388]** use either manually-entered pilot-reported altitude or an adaptable parameter per handoff area to determine whether the aircraft satisfies the altitude criteria for inclusion in the intrafacility handoff area.

3.2.1.1.8.32 Default Settings for Enabling Disabling Automatic Handoff Processing
Adaptable default settings for automatic handoff processing enabling and disabling **shall[STARS-SSD-00389]** be used when STARS is initiated.

3.2.1.1.8.33 TRACON Sectorization

3.2.1.1.8.33.1 Terminal Areas
A terminal area **shall[STARS-SSD-00390]** consist of one to multiple Terminal Sectors each being adaptable and having an associated configuration plan.

3.2.1.1.8.33.3 Configuration Plans
The system **shall[STARS-SSD-00391]** consist of no fewer than 12 configuration plans, each adaptable with one defaulted on at coldstart.

3.2.1.1.8.33.6 Flight Plan Information and Track Reassignment
When resectorization is performed, new and existing flight plan information for flights that have never been associated to a track **shall[STARS-SSD-00392]** be reassigned to TCPs, and potentially have their scratchpad information changed, based on the adaptation of the new configuration plan.

When resectorization is performed inactive flight plans with an automatic or unassigned scratchpad **shall[STARS-SSD-00393]** have their scratchpad (1 or 2) set to the new default text per the adaptation criteria of the new configuration plan.

3.2.1.1.8.33.7 No Effect On Current Flight Plans and Tracks
When resectorization is performed, no change in assignment **shall[STARS-SSD-00394]** be made to flight plans that have acquired to a track.

3.2.1.1.8.33.8 Resectorization Results in Deconsolidation
When resectorization is performed, all consolidated positions **shall[STARS-SSD-00395]** be deconsolidated except for positions for which the new configuration does not assign flight plans.

3.2.1.1.8.33.9 Partial Resectorization
All unassociated and future flights arriving or departing over designated fix(es) **shall[STARS-SSD-00396]** be reassigned to a specified TCP when a partial resectorization is performed.

3.2.1.1.8.33.10 Resectorization Results in MSAW Area Activation
When resectorization is performed, the MSAW departure inhibit and approach monitor inhibit areas for each MSAW/CA airport associated with the specified Terminal Sector(s) **shall[STARS-SSD-00397]** be activated as defined in adaptation for the new configuration plan.

3.2.1.1.8.33.11 Resectorization Results in ATPA Initialization
When resectorization is performed, ATPA settings **shall[STARS-SSD-00398]** be enabled or disabled per the adaptation of the new configuration plan.

3.2.1.1.8.33.12 Resectorization Results in Airspace Violation (ASV) Initialization
When resectorization is performed, arrival/departure track ASV monitor processing **shall[STARS-SSD-00399]** be automatically enabled or disabled per the adaptation of the new configuration plan.

3.2.1.1.8.33.13 Resectorization Results in Flight-Data Auto-Modify Filter Initialization
When resectorization is performed, each flight-data auto-modify filter **shall[STARS-SSD-00400]** be set to its adapted enable/disable status.

3.2.1.1.8.34 Full Consolidation
In full consolidation, all information is transferred and the position is closed, receiving no further information until a deconsolidation is executed.

3.2.1.1.8.34.1 Transfer of Track and Flight Plan Control and Display
Control of all tracks and the control and display of all active, inactive and future flight plans **shall[STARS-SSD-00401]** be transferred from one TCP to another upon full consolidation.

Display of all tracks in pointout accepted state **shall[STARS-SSD-00402]** be transferred from one TCP to another when consolidation is performed unless the track becomes owned at the receiving TCP as a result of the consolidation.

The data block color of a previous owner of an intrafacility handoff **shall[STARS-SSD-00403]** be changed to no longer denote ownership and not be transferred to the receiving TCP upon full consolidation.

The data block color of a previous owner of an interfacility handoff **shall[STARS-SSD-00404]** be changed to no longer denote ownership and be transferred to the receiving TCP upon full consolidation.

When a consolidation is performed, tracks in pointout state either at the position that is relinquishing a TCP or that becomes owned at the consolidated position **shall[STARS-SSD-00405]** no longer be displayed in the pointout state or be in the pointout state respectively.

3.2.1.1.8.34.2 Transfer of Flight Plan Processing Data
All flight plan processing data directed to or forced to the transferring TCP **shall[STARS-SSD-00406]** be passed to the TCP receiving the full consolidation.

3.2.1.1.8.34.3 Exclusion of VFR Track and Flight Plan Control and Display
Through adaptation, control and display of VFR tracks along with flight plan information and processing data directed to or forced to the transferring TCP, **shall[STARS-SSD-00407]** be excluded from being transferred upon full consolidation.

3.2.1.1.8.35 Basic Consolidation
In basic consolidation, all future flight plan information is transferred and the controller is responsible for processing all remaining tracks assigned to that TCP. The position is closed after the disposition of all tracks.

3.2.1.1.8.35.1 Transfer of Flight Plan Control and Display
Control and display of future flight plans and of flight plans other than those associated with tracks that have come under control of the TCP to be consolidated **shall[STARS-SSD-00408]** be transferred from one TCP to another upon basic consolidation.

3.2.1.1.8.35.2 Transfer of Flight Plan Processing Data
All flight plan processing data directed to or forced to the transferring TCP **shall[STARS-SSD-00409]** be passed to the TCP receiving the basic consolidation.

3.2.1.1.8.36 Limited Consolidation

3.2.1.1.8.36.1 Transfer of Track and Flight Plan Control and Display
Control and display of future flight plans assigned by reference to fix pairs and of flight plans other than those associated with tracks that have come under control of the TCP to be consolidated **shall[STARS-SSD-00410]** be transferred from one TCP to another upon limited consolidation.

3.2.1.1.8.36.2 Transfer of Flight Plan Processing Data
All flight plan processing data directed to or forced to the transferring TCP **shall[STARS-SSD-00411]** be passed to the TCP receiving the limited consolidation unless the TCP input indicates otherwise.

3.2.1.1.8.37 Deconsolidation
A previous consolidation **shall[STARS-SSD-00412]** be negated when deconsolidation is performed.

When a deconsolidation is performed, tracks in a pointout state at the position that is relinquishing a TCP **shall[STARS-SSD-00413]** remain in the pointout state and continue to be displayed in the pointout color at that position.

3.2.1.1.8.38 Processing of Handoffs on Transition to FDP Mode

3.2.1.1.8.38.1 ARTCC & Adjacent TRACON Interfacility Handoff in FDP mode
When Flight Data Processing Mode is enabled for an ARTCC, all flights in interfacility handoffs from that ARTCC and all En Route flights in interfacility handoffs from an adjacent TRACON that use that ARTCC for IFDT message routing **shall[STARS-SSD-00414]** be accepted without sending the Accept Transfer (TA) message to that ARTCC.

3.2.1.1.8.38.3 Adjacent TRACON Non-En Route Handoff in FDP mode
When Flight Data Processing Mode is enabled for an ARTCC, all non-En Route flights in handoffs from an adjacent TRACON that use that ARTCC for IFDT message routing **shall[STARS-SSD-00415]** be accepted without sending the Accept Transfer (TN) message and be removed from handoff without sending the Recall Transfer (TL) message to that adjacent TRACON.

3.2.1.1.8.39 Determine Flight Rules
Host interfacility flight plans **shall[STARS-SSD-00416]** be assigned IFR unless the data in the altitude or aircraft category field of the incoming FP message indicates that the flight is VFR or OTP.

Interfacility flight plans received from an adjacent TRACON **shall[STARS-SSD-00417]** be assigned VFR.

Flight plans entered by TCP input **shall[STARS-SSD-00418]** be assigned IFR unless assigned a beacon code from a local VFR pool.

3.2.1.1.8.40 VFR Flight Plans
MSAW alerts **shall[STARS-SSD-00419]** be inhibited or enabled based on VFR or non-VFR status respectively.

3.2.1.1.8.41 Duplicate ACID Capacity
Storage of flight plan data **shall[STARS-SSD-00420]** permit a maximum of one arrival and an adapted number of overflight and departure flight plans with the same ACID while rejecting any that exceed these limits.

The first leg of an in-out-in series **shall[STARS-SSD-00421]** be used in determining a duplicate ACID condition.

3.2.1.1.8.42 Change of Flight Type
On acquisition of a departure flight, the flight's type of flight **shall[STARS-SSD-00422]** be changed to arrival if the flight's exit fix is an airport within the TAS.

When an Initiate Transfer (TI) Message is received from an ARTCC for a departure flight plan that is not part of an In-Out-In series, the flight's type of flight **shall[STARS-SSD-00423]** be changed to overflight.

3.2.1.1.8.43 Unsuspend Track Upon Inbound Handoff Initiate
Upon acceptance of an interfacility handoff initiate message for a suspended track, the track **shall[STARS-SSD-00424]** be unsuspended automatically.

3.2.1.1.8.44 Suspended Track in Beacon Mismatch
If a suspended track goes into a beacon code mismatch, it **shall[STARS-SSD-00425]** be unsuspended automatically.

3.2.1.1.8.45 Reduced Vertical Separation Minima (RVSM) Considerations
An Reduced Vertical Separation Minima (RVSM) altitude block capability **shall[STARS-SSD-00426]** be provided in adaptation such that the Assigned or Requested Altitude entered for a flight can be evaluated along with other adaptable parameters to determine if it is eligible or not for RVSM separation standards.

3.2.1.1.9 En Route and TFMS Interfaces

3.2.1.1.9.1 Results of Enabling En Route IFDT
When the IFDT function is enabled, all inactive flight plans of interfacility origin **shall[STARS-SSD-00427]** be optionally deleted by operator input.

3.2.1.1.9.2 Results of Disabling En Route IFDT
When the IFDT function is disabled, receipt and transmission of IFDT messages **shall[STARS-SSD-00428]** end, except for Test Data and Data Test messages.

3.2.1.1.9.3 En Route Interfacility Message Processing
Requirements in this section are applicable to both CONUS (NAS) and Outside of the Continental United States (OCONUS) sites, except for those requirements marked as 'NAS only' or 'OCONUS only'.

For a site adapted as NAS or OCONUS, interfacility data messages **shall[STARS-SSD-00429]** be processed as specified in the STARS to ARTCC for IFDT ICD, NAS-IC-21058100 or STARS to APEX for IFDT Outside the US ICD, H372347 respectively.

3.2.1.1.9.3.1 Operational Flight Data

3.2.1.1.9.3.1.1 Flight Plan Messages

3.2.1.1.9.3.1.1.1 VFR Flight Plan Messages Transmitted to an ARTCC

VFR Flight Plan messages **shall[STARS-SSD-00430]** have a status of 'Departure', may contain data based on adaptation for fields not entered and be transmitted to an ARTCC when requested by TCP input.

A TRACON/ARTCC VFR Flight Plan message, amended by TCP input, **shall[STARS-SSD-00431]** be retransmitted to the original ARTCC when the flight plan was rejected by that ARTCC.

3.2.1.1.9.3.1.1.2 Flight Plan Messages From an ARTCC

Flight information received from an ARTCC in a Flight Plan or Amendment message **shall[STARS-SSD-00432]** be stored, used to create a new flight plan or update an existing flight plan and used to determine Automatic Scratchpad based on adaptation criteria when the message is accepted.

3.2.1.1.9.3.1.1.3 Flight Plan Messages Transmitted To Adjacent TRACONs

Non-En Route System Flight Plans **shall[STARS-SSD-00433]** be generated and transmitted to adjacent TRACONs when an interfacility handoff to an adjacent TRACON is initiated, when the track from which the flight plan is developed is associated by the sending TRACON; and the track did not originate from an ARTCC flight plan.

3.2.1.1.9.3.1.1.4 Flight Plan Messages Received From Adjacent TRACON

Non-En Route System Flight Plans received from adjacent TRACONs **shall[STARS-SSD-00434]** be processed in the same manner as an ARTCC Flight Plan with the exception of interfacility duplicate ACID checking.

When the status of a Non-En Route System Flight Plan received from an adjacent TRACON is not arrival or overflight, the flight plan **shall[STARS-SSD-00435]** be rejected.

Flight information received from an adjacent TRACON in an accepted Non-En-Route System Flight Plan message **shall[STARS-SSD-00436]** be stored and used to create a new Flight Plan.

3.2.1.1.9.3.1.1.5 Processing Duplicate Flight Plan Message Information

3.2.1.1.9.3.1.1.5.1 Duplicate Arrival Flight Plan

When an arrival flight plan is received with the same ACID and En-Route Computer ID (ECID) as an existing arrival flight plan, the new flight plan **shall[STARS-SSD-00437]** be accepted and discarded.

3.2.1.1.9.3.1.1.5.2 Interfacility Flight Plan Duplicate of Manually Entered Flight Plan
When an interfacility flight plan is received that has identical fields to that of an existing manually entered flight plan previously received, it **shall[STARS-SSD-00438]** update the existing flight plan's missing ECID and allow the flight plan to be eligible for interfacility message processing.

3.2.1.1.9.3.1.1.5.3 Departure Flight Plan Processing
A departure flight plan which contains a TCID with either the same or different ACID as a VFR departure flight plan **shall[STARS-SSD-00439]** be accepted and replace the previous or assign a new TCID and create a new flight plan respectively.

3.2.1.1.9.3.1.1.5.6 Duplicate Overflight Flight Plan
An overflight flight plan that contains an ACID and ECID which is a duplicate of a previously accepted overflight flight plan **shall[STARS-SSD-00440]** accepted then discarded unless the overflight flight plan forms an In-Out-In flight with the previously accepted overflight flight plan.

3.2.1.1.9.3.1.1.5.7 Duplicate Departure Flight Plan
A departure flight plan that contains an ACID and ECID which is a duplicate of a previously accepted departure flight plan **shall[STARS-SSD-00441]** be accepted and discarded.

3.2.1.1.9.3.1.1.5.8 Duplicate Interfacility Flight Plans with Different ECIDs
When an interfacility flight plan is received and all the fields are the same as an existing interfacility flight plan but the ECID is different it **shall[STARS-SSD-00442]** be accepted and discarded, and the existing ECID will be replaced with the new ECID.

3.2.1.1.9.3.1.1.5.9 Duplicate ECID-Existing Flight Plan Deleted
When a flight plan is received with a different ACID but the same ECID as an existing flight plan, the incoming flight plan **shall[STARS-SSD-00443]** be accepted and the existing flight plan deleted if the existing flight plan is not active and the time between its ETA or PTD and the current time is greater than an adapted parameter.

3.2.1.1.9.3.1.1.5.10 Duplicate ECID-Existing Flight Plan not Deleted
When a flight plan is received with a different ACID but the same ECID as an existing flight plan, the incoming flight plan **shall[STARS-SSD-00444]** be accepted and the existing flight plan changed to a local flight plan with a STARS controller ID if the existing flight is active and not in intra/interfacility handoff, or is not active and the time between its ETA or PTD and the current time is less than or equal to an adapted parameter.

An arrival flight plan that has the same ACID, ECID and beacon code/radar only as an existing overflight flight plan, and is not eligible to form or become part of an In-Out-In series with the existing flight plan, nor part of an In-Out-In series that already contains an arrival **shall[STARS-SSD-00445]** be accepted and replace the existing flight plan using the same TCID.

3.2.1.1.9.3.1.1.5.11 Identification of Legs in an In-Out-In Series
When an interfacility departure flight plan is received that contains the same ACID, ECID and beacon code/radar only as an existing interfacility overflight or arrival flight plan and none of the

existing flight plans in the In-Out-In series is a departure or active, then the received flight plan **shall[STARS-SSD-00446]** be stored and identified as the first leg of the In-Out-In series.

Table 3.2.1.1.9-1 An In-Out-In Series May Consist of:

Case	In-Out-In Series		
1	Departure		Arrival
2	Departure	Overflight(s)	Arrival
3	Departure	Overflight(s)	
4		Overflight(s)	Arrival
5		Overflights	

A received interfacility arrival flight plan **shall[STARS-SSD-00447]** be stored and identified as the last leg of an In-Out-In series if the following conditions are met:

a. The received flight plan contains the same ACID, ECID, and beacon code/radar only as an existing interfacility overflight or departure flight plan
b. None of the existing flight plans in the In-Out-In series is an arrival
c. Either no overflight exists, one of the overflights is in handoff to the TRACON or under terminal control, or the arrival has a coordination time within adaptable limits of an overflight leg.

When an interfacility overflight flight plan is received that contains the same ACID, ECID and beacon code/radar as an existing interfacility flight plan, and none of the existing flight plans is an active arrival and it does not match that of any other overflight flight plan with the same coordination time then the received overflight **shall[STARS-SSD-00448]** be stored and identified as a leg of an In-Out-In series.

3.2.1.1.9.3.1.1.5.12 Deletion of an In-Out-In Series

When an interfacility flight plan is received that contains a different ECID and ACID but the same assigned beacon code as an existing leg of an In-Out-In series, and the first leg has an active deletion timer, then the new flight plan **shall[STARS-SSD-00449]** be accepted, and all remaining legs of the In-Out-In series will be deleted.

3.2.1.1.9.3.1.1.6 Aircraft Category Processing

If an FP or AM message is received that contains an adapted aircraft type, the aircraft category adapted for the aircraft type and its corresponding weight class/wake category **shall[STARS-SSD-00450]** be stored in the flight plan.

If an FP or AM message is received that contains a non-adapted type, or an FP message is received that does not contain an aircraft type, the aircraft category and weight class/wake category stored in the flight plan **shall[STARS-SSD-00451]** be set to unknown.

3.2.1.1.9.3.1.2 Departure Messages

A Departure Message (DM) **shall[STARS-SSD-00452]** be generated and transmitted to an ARTCC when automatic track acquisition occurs, or a track is started manually by TCP input, on a departure flight plan that was received from that ARTCC.

3.2.1.1.9.3.1.3 Amendment Messages - Received From an ARTCC

3.2.1.1.9.3.1.3.1 Transmission of Acceptance For Amendment Message

An Acceptance Response (DA) message **shall[STARS-SSD-00453]** be transmitted when an Amendment (AM) message specifying a change in an interfacility flight plan field is accepted, whether the change is made or discarded.

3.2.1.1.9.3.1.3.2 Checks After Processing Amendment Message

A flight plan that was changed by the acceptance of an Amendment Message **shall[STARS-SSD-00454]** be validated in the same manner that a received flight plan is validated.

3.2.1.1.9.3.1.3.3 Field Specific Amendment Message Processing

An Amendment message specifying a change in an ARTCC flight plan **shall[STARS-SSD-00455]** be processed in accordance with Table 3.2.1.1.9-3.

Table 3.2.1.1.9-2 Amendment Message Processing

Field	Status	Determination	Response
02 (Flight Indent)	ACTIVE INACTIVE	REJECT ACCEPT/AMEND[4]	DR DA
03 (A/C data)	ACTIVE INACTIVE	ACCEPT/AMEND[1] ACCEPT/AMEND	DA DA
04 (Beacon Code)	ACTIVE INACTIVE	REJECT ACCEPT/AMEND[5]	DR DA
06 (Coordination fix)	ACTIVE INACTIVE	ACCEPT/DISCARD[2] ACCEPT/AMEND	DA DA
07 (Coordination time)	ACTIVE INACTIVE	ACCEPT/DISCARD ACCEPT/AMEND	DA DA
08/09 (Assigned/Requested Altitude)	ACTIVE INACTIVE	ACCEPT/DISCARD[3] ACCEPT/AMEND	DA DA
10 (Route)	ACTIVE INACTIVE	ACCEPT/DISCARD[2] ACCEPT/AMEND	DA DA

[1] Aircraft category amendments that change the IFR/VFR status of active flights are accepted and applied for arrivals and overflights that have not yet come under terminal control.
[2] Amendments to fix fields for active arrivals and overflights are accepted and applied until handoff initiation occurs.
[3] Assigned altitude amendments that change the IFR/VFR status of active flights are accepted and applied for arrivals and overflights that have not yet come under terminal control.
[4] Refer to 3.2.1.1.9.3.1.3.5 for the amendment of the ACID field of a leg of an In-Out-In flight.
[5] Refer to 3.2.1.1.9.3.1.3.5 for the amendment of the number of the beacon code of an inactive leg of an In-Out-In flight.

3.2.1.1.9.3.1.3.4 Rejections of Amendment Messages of In-Out-In Legs

An Amendment message received for a flight plan that is a leg of an In-Out-In series **shall[STARS-SSD-00456]** be rejected if the message amends a departure/overflight to an arrival and the series already contains an arrival, or the message amends an overflight/arrival to a departure and the series already contains a departure, or the series contains an active leg.

3.2.1.1.9.3.1.3.5 Amendment Message Modifying the ACID and/or Beacon Code of an In-Out-In Leg

An amendment message changing the ACID and/or Beacon Code of a flight that is a leg of an In-Out-In series **shall[STARS-SSD-00457]** modify the ACID and/or Beacon Code of all of the legs when all the legs are inactive; or reject the ACID or accept and discard the Beacon Code if any leg is active.

3.2.1.1.9.3.1.3.6 Amendment Message Modifying the Coordination Time of an In-Out-In Leg

An amendment message amending the coordination time of an overflight flight plan that is part of an In-Out-In series **shall[STARS-SSD-00458]** cause any inactive overflight flight plans in the series to be re-sorted into time order.

An amendment to the coordination time of any inactive leg of an In-Out-In series **shall[STARS-SSD-00459]** cause its deletion timer to be re-initiated.

3.2.1.1.9.3.1.4 Cancellation Messages

3.2.1.1.9.3.1.4.1 Cancellation Messages From an ARTCC

When a flight referenced by a Cancellation message (CX) has never come under STARS control, flight plan information for that flight **shall[STARS-SSD-00460]** be removed or, if it is in a coordination list changed to a local flight plan with an indication denoting cancellation of that flight.

When an arrival or overflight flight plan referenced by a CX message has been auto-acquired and is under ARTCC control, has not yet come under STARS control and no inbound handoff accept is in progress, flight plan information for that flight **shall[STARS-SSD-00461]** be removed.

When a CX message is received for a flight that is a leg of an In-Out-In series containing two or more legs, the flight identified in the CX message **shall[STARS-SSD-00462]** be deleted and either no longer identify the remaining flight plan as a leg in an In-Out-In series or reorder the remaining legs in the series.

3.2.1.1.9.3.1.4.2 Cancellation Messages From Adjacent TRACON

When a CX message from an adjacent TRACON is received for either a track which has acquired but is under the control of the adjacent facility or a track that has never been active in the receiving facilities STARS system, flight plan information for that flight **shall[STARS-SSD-00463]** be removed immediately.

3.2.1.1.9.3.1.4.3 Automatic Generation of Cancellation Messages to Adjacent TRACON

A CX message to an adjacent TRACON **shall[STARS-SSD-00464]** be automatically generated and sent when either an Initiate Transfer (TM) message is not accepted or a Data Accept (DA) message for a successful Transfer Recall (TL) message has been received from an adjacent TRACON which previously had accepted a flight plan.

3.2.1.1.9.3.1.5 Request Flight Plan Messages - Generation and Transmission
When adaptation supports that the ARTCC can process Request Flight Plan (RF) messages, the system **shall[STARS-SSD-00465]** generate and transmit an RF message to an ARTCC when TCP input identifies a discrete beacon code or ECID or when a departure flight plan is not available for a departure flight with a discrete beacon code in an adaptable area.

3.2.1.1.9.3.1.6 Beacon Terminate Messages
A Beacon Terminate (TB) message(s) **shall[STARS-SSD-00466]** be generated and sent upon TCP entry to drop a single track, or to drop multiple tracks if enabling IFDT, or if the track qualifies for an auto drop area and the tracks are not a leg of an In-Out-In series.

3.2.1.1.9.3.2 Track Data Interfacility Messages

3.2.1.1.9.3.2.1 Coordinate Translation for Data Sent to Adjacent TRACON
Position and velocity information transmitted to an adjacent TRACON **shall[STARS-SSD-00467]** undergo coordinate translation based upon adaptation.

3.2.1.1.9.3.2.2 Initiate Transfer Messages

3.2.1.1.9.3.2.2.1 Initiate Transfer Messages Transmitted to ARTCC or Adjacent TRACON
An Initiate Transfer (TI) message **shall[STARS-SSD-00468]** be generated and sent to an ARTCC or an adjacent TRACON from either a TCP handoff action or a track qualifies for auto Hand-off via adaptation, with Field 13 data also being sent based on adaptation.

A TI message **shall[STARS-SSD-00469]** not be generated if a Recall Transfer (TA) message has been sent on the track or once an automatic initiate hand-off to the ARTCC or adjacent TRACON has failed.

3.2.1.1.9.3.2.2.2 Initiate Transfer Messages Received From ARTCC or Adjacent TRACON
When STARS accepts a Initiate Transfer (TI) message for an arrival or overflight flight plan the handoff process **shall[STARS-SSD-00470]** begin.

Based on adaptation, when there is no track that is associated with either the TI message or the assigned beacon code the position and velocity information in the TI message **shall[STARS-SSD-00471]** be used to display its position until the track auto acquires with the TI message or assigned beacon code.

When STARS accepts an interfacility handoff for an arrival or overflight flight plan that contains the same ACID as an active departure or overflight previously owned by the STARS facility, the active departure or overflight flight plan **shall[STARS-SSD-00472]** be deleted if so adapted.

When STARS accepts an interfacility handoff for an arrival or overflight flight plan that is the Middle or Last Leg of an In-Out-In series, the flight plans for all earlier legs **shall[STARS-SSD-00473]** be deleted.

3.2.1.1.9.3.2.2.3 Non-En Route System TMs To Adjacent TRACON
A Non-En Route System Initiate Transfer (TM) message **shall[STARS-SSD-00474]** be generated and sent to an adjacent TRACON when a TCP takes a handoff action which is intended to transfer control of flight information for an arrival or overflight to that TRACON, when the track from which the flight plan is developed is active, associated, and controlled by the sending TRACON; and the track did not originate from an ARTCC flight plan.

3.2.1.1.9.3.2.2.4 Non-En Route System TMs From Adjacent TRACON
When STARS accepts an Initiate Transfer (TM) message from an adjacent TRACON for an arrival or overflight flight plan the handoff process **shall[STARS-SSD-00475]** begin.

Based on adaptation, when there is no track that is associated with the assigned beacon code the position and velocity information in the TM message **shall[STARS-SSD-00476]** be used to display its position until the track auto acquires with the assigned beacon code.

3.2.1.1.9.3.2.3 Accept Transfer Messages

3.2.1.1.9.3.2.3.1 Accept Transfer Messages Transmitted To ARTCC or Adjacent TRACON
An Accept Transfer (TA) to an ARTCC or adjacent TRACON or an Accept Transfer (TN) to an adjacent TRACON **shall[STARS-SSD-00477]** be transmitted, with Field 48 if adapted, when either a TCP entry initiates a handoff accept or an unconditional handoff accept is initiated in which case all responses are discarded.

3.2.1.1.9.3.2.3.2 Accept Transfer Messages Received From ARTCC or Adjacent TRACON
Handoff of a flight plan to an ARTCC or an adjacent TRACON **shall[STARS-SSD-00478]** be completed when either an Acceptance message (DA) or no Data Reject (DR) is received for the TA.

3.2.1.1.9.3.2.3.3 Non-En Route System Accept Transfer Messages To Adjacent TRACON
A TN message **shall[STARS-SSD-00479]** be transmitted to an adjacent TRACON when a TCP initiates either a normal or unconditional handoff accept.

3.2.1.1.9.3.2.3.4 Non-En Route System Accept Transfer Messages From Adjacent TRACON
Handoff of a flight plan from an adjacent TRACON **shall[STARS-SSD-00480]** be completed when either an Acceptance message (DA) or no Data Reject (DR) is received for the TN.

3.2.1.1.9.3.2.4 Recall Transfer Messages

3.2.1.1.9.3.2.4.1 Recall Transfer Messages Transmitted To ARTCC or Adjacent TRACON
When a flight plan is in the process of being handed off via interfacility and that handoff has not been accepted it **shall[STARS-SSD-00481]** be capable of being recalled by either a normal or

unconditional TCP entry and subsequent TA message being generated and accepted or not respectively.

3.2.1.1.9.3.2.4.2 Recall Transfer Messages Received From ARTCC or Adjacent TRACON
Handoff from an ARTCC or an adjacent TRACON **shall[STARS-SSD-00482]** be terminated when a recall message, transmitted by that ARTCC/TRACON, is accepted.

When a recall message is accepted from an ARTCC or an adjacent TRACON for a track in handoff and the corresponding track was actively tracked or uncorrelated, the track **shall[STARS-SSD-00483]** maintain that status after the acceptance of the TA.

When a recall message is accepted from an ARTCC for a track in handoff and the corresponding track was not correlating on the TI beacon code then the track **shall[STARS-SSD-00484]** become an inactive flight plan and maintain its eligibility status for auto-acquisition after the acceptance of the TA.

3.2.1.1.9.3.2.4.3 Non-En Route System Recall Transfer Messages To Adjacent TRACON
A Recall Transfer (TL) message **shall[STARS-SSD-00485]** be sent to an adjacent TRACON, prior to receipt of an Accept Transfer message from that facility, when TCP input initiates either a normal or unconditional recall action for a track in handoff to an adjacent TRACON.

The referenced flight **shall[STARS-SSD-00486]** be removed from handoff when an Acceptance Message (DA) for a normal recall is received or the referenced flight removed from handoff and any TRACON response discarded for an unconditional recall.

3.2.1.1.9.3.2.4.4 Non-En Route System Recall Transfer Messages From Adjacent TRACON
Handoff from an adjacent TRACON **shall[STARS-SSD-00487]** be terminated when a recall message, transmitted by that TRACON, is accepted.

When a recall message is accepted from an adjacent TRACON for a handoff where the track was either actively being tracked or was not correlating, the track **shall[STARS-SSD-00488]** be removed from handoff status and continue to be tracked or remain uncorrelated.

When a recall message is accepted from an adjacent TRACON for a handoff, the corresponding track **shall[STARS-SSD-00489]** be removed from handoff status and retain its eligibility for auto-acquisition from before handoff initiation.

3.2.1.1.9.3.2.5 Track Update Messages

3.2.1.1.9.3.2.5.1 Track Update Messages Transmitted To an ARTCC or Adjacent TRACON
A Track Update (TU) message **shall[STARS-SSD-00490]** be automatically generated and transmitted to a receiving ARTCC or adjacent TRACON every time the track position and velocity changes for a non-coasting track that is in handoff until the Transfer Accept message is accepted or the handoff is recalled.

3.2.1.1.9.3.2.5.2 Track Update Messages Received From an ARTCC or Adjacent TRACON

When adaptation is setup to process IFDT positional information and when a flight in handoff is either not being tracked (handoff coast) or is being tracked the TU positional data **shall[STARS-SSD-00491]** be used to update the tracks position or for a comparison against the systems position and an adapted distance criterion.

3.2.1.1.9.3.2.6 Flight Data Processing Mode Enabled

When Flight Data Processing Mode is enabled for the ARTCC the system **shall[STARS-SSD-00492]** send 2 Recall Transfer messages, an adaptable period apart, for each flight in handoff to the ARTCC or adjacent TRACON.

Initiate Transfer and Track Update messages **shall[STARS-SSD-00493]** not be transmitted when the Flight Data Processing Mode is enabled for the ARTCC.

3.2.1.1.9.3.2.7 Enhanced Traffic Management Messages

Flow Control Track/Full Data Block Information (TZ) messages **shall[STARS-SSD-00494]** be transmitted to the ARTCC providing selected track information for all associated tracks controlled by the TAS, at an adaptable rate when TZ message processing has been enabled via keyboard entry and the Traffic Management Unit (TMU) is unavailable.

Once a track is no longer controlled by the terminal automation system, the system **shall[STARS-SSD-00495]** stop sending TZ messages for that track.

3.2.1.1.9.3.2.8 Host/Non-Host

An Initiate Transfer, Accept Transfer or Recall Transfer message being transmitted to a non-host ARTCC or adjacent TRACON **shall[STARS-SSD-00496]** be in accordance with the applicable ICD specified in Section 3.2.1.1.9.3.

3.2.1.1.9.3.2.9 Cancel Handoff Messages

When a Cancel Transfer message is accepted from an ARTCC for a flight previously in handoff from or to that ARTCC the system **shall[STARS-SSD-00497]** terminate the handoff or indicate to the TCP that the handoff has been cancelled respectively (OCONUS only).

3.2.1.1.9.3.2.10 Initiate Pointout Messages

When STARS adaptation indicates that the ARTCC/adjacent TRACON can process interfacility pointouts, an Initiate Pointout message **shall[STARS-SSD-00498]** be generated and transmitted to an ARTCC or Adjacent TRACON when a TCP performs a pointout action (OCONUS only).

When STARS adaptation indicates that the ARTCC/adjacent TRACON can process interfacility pointouts, A pointout action **shall[STARS-SSD-00499]** commence when an Initiate Pointout message is accepted from that ARTCC or Adjacent TRACON (OCONUS only).

3.2.1.1.9.3.2.11 Accept Pointout Messages

An Accept Pointout message **shall[STARS-SSD-00500]** be transmitted to an ARTCC or an adjacent TRACON, when a TCP performs either a normal or unconditional pointout accept action and, if the action is unconditional, any ARTCC/TRACON response will be discarded (OCONUS only).

The pointout of a flight to an ARTCC or Adjacent TRACON **shall[STARS-SSD-00501]** be indicated to the TCP as accepted when an Accept Pointout message is accepted from that ARTCC or Adjacent TRACON (OCONUS only).

3.2.1.1.9.3.2.12 Recall Pointout Messages
A Recall Pointout message **shall[STARS-SSD-00502]** be transmitted to an ARTCC or an adjacent TRACON, when a TCP performs either a normal or unconditional pointout recall action and, if the action is unconditional, any ARTCC/TRACON response will be discarded (OCONUS only).

The pointout of a flight **shall[STARS-SSD-00503]** be terminated when a Recall Pointout message is accepted from an ARTCC or Adjacent TRACON (OCONUS only).

3.2.1.1.9.3.2.13 Cancel Pointout Messages
The pointout of a flight from an ARTCC **shall[STARS-SSD-00504]** be terminated when a Cancel Pointout message is accepted with a notification sent to the sending TCP to indicate the cancellation. (OCONUS only).

3.2.1.1.9.3.3 Response Messages
Response messages **shall[STARS-SSD-00505]** be transmitted to the facility which originated the message sequence.

3.2.1.1.9.3.3.2 Acceptance Messages
An Acceptance Message (DA) **shall[STARS-SSD-00506]** be generated and transmitted for received Operational Flight Data messages and Initiate, Accept and Recall Transfer messages (NAS) or Initiate, Accept, Cancel and Recall Transfer/Pointout messages (OCONUS) that are formatted in accordance with the applicable ICD specified in Section 3.2.1.1.9.3.

3.2.1.1.9.3.3.2.2 Acceptance Messages Transmitted To ARTCC or Adjacent TRACON
An Acceptance message **shall[STARS-SSD-00507]** be transmitted in response to an accepted Departure, Arrival, and Overflight Flight Plans as well as Amendment and Cancellation messages received from an ARTCC.

An Acceptance message **shall[STARS-SSD-00508]** be transmitted in response to an accepted Initiate, Accept and Recall Transfer message (NAS) or Initiate, Accept, Cancel and Recall Transfer/Pointout message (OCONUS) received from an ARTCC or an adjacent TRACON.

3.2.1.1.9.3.3.2.3 Acceptance Messages Received From ARTCC or Adjacent TRACON
In accordance with the table below, an Acceptance message received from a facility in response to a message that was previously transmitted by the terminal automation system **shall[STARS-SSD-00509]** signify that that message was accepted by that facility:

Message Type	Facility Type	NAS/OCONUS applies
Departure	ARTCC	Both
Request Flight Plan	ARTCC	Both
VFR Flight Plan	ARTCC	Both
Initiate Transfer	ARTCC or adjacent TRACON	NAS

Initiate Transfer/Pointout	ARTCC or adjacent TRACON	OCONUS
Accept Transfer	ARTCC or adjacent TRACON	NAS
Accept Transfer/Pointout	ARTCC or adjacent TRACON	OCONUS
Recall Transfer	ARTCC or adjacent TRACON	NAS
Recall Transfer/Pointout	ARTCC or adjacent TRACON	OCONUS

When an Acceptance message is received from an ARTCC or adjacent TRACON in response to an Initiate Transfer or Recall Transfer, the track **shall[STARS-SSD-00510]** be placed in or removed from handoff status respectively.

When an Acceptance message is received from an ARTCC or an adjacent TRACON in response to the message type listed for an arrival or an overflight flight plan handoff, and when the track has already acquired or not per the table below, then the track **shall[STARS-SSD-00511]** continue to be tracked if acquired or be eligible for auto-acquisition if not acquired:

Message Type	Acquired or not	NAS/OCONUS applies
Accept Transfer	Acquired	NAS
Accept Transfer/Pointout	Acquired	OCONUS
Accept Transfer	Not acquired	NAS
Accept Transfer/Pointout	Not Acquired	OCONUS

3.2.1.1.9.3.3.2.4 DAs To Adjacent TRACON for Non-En Route System Messages

An Acceptance message **shall[STARS-SSD-00512]** be transmitted in response to an accepted Non-En Route System Flight Plan, Cancellation, Initiate Transfer, Accept Transfer or Recall Transfer received from an adjacent TRACON.

3.2.1.1.9.3.3.2.5 DAs From Adjacent TRACON for Non-En Route System Messages

An acceptance message received from an adjacent TRACON, in response to a Non-En Route System Flight Plan, Cancellation, Initiate Transfer, Accept Transfer or Recall Transfer message previously transmitted by the terminal automation system, **shall[STARS-SSD-00513]** signify that that message was accepted by the TRACON.

When an Acceptance message is received from an adjacent TRACON in response to an Initiate Transfer or Recall Transfer the track **shall[STARS-SSD-00514]** be placed in or removed from handoff status respectively.

When an Acceptance message is received from an adjacent TRACON in response to an Accept Transfer for an arrival flight plan handoff, then the track **shall[STARS-SSD-00515]** continue to be tracked based on past track data or be eligible for auto-acquisition according to whether the track has acquired or not respectively.

3.2.1.1.9.3.3.3 Rejection Messages

3.2.1.1.9.3.3.3.1 Rejection Messages Transmitted To ARTCC or Adjacent TRACON

3.2.1.1.9.3.3.3.1.1 Due to Format Error

In accordance with table below, a Rejection message **shall[STARS-SSD-00516]** be transmitted to the specified facility when a message specified below is received from that facility with a format error:

Message Type	Facility Type	NAS/OCONUS applies
Arrival Flight Plan	ARTCC	Both
Departure Flight Plan	ARTCC	Both
Overflight Flight Plan	ARTCC	Both
Amendment	ARTCC	Both
Cancellation	ARTCC	Both
Initiate Transfer	ARTCC or adjacent TRACON	NAS
Initiate Transfer/Pointout	ARTCC or adjacent TRACON	OCONUS
Accept Transfer	ARTCC or adjacent TRACON	NAS
Accept Transfer/Pointout	ARTCC or adjacent TRACON	OCONUS
Recall Transfer	ARTCC or adjacent TRACON	NAS
Recall Transfer/Pointout	ARTCC or adjacent TRACON	OCONUS

3.2.1.1.9.3.3.3.1.2 Amendment Specific Rejection Criteria

A Rejection Response message **shall[STARS-SSD-00517]** be transmitted to an ARTCC when an Amendment message is received for a track that is not in the system, has an incorrect TCID, would cause a duplicate ACID condition, has a logic error in field 12 (or 17 if adapted) or has a field 2 or 4 amendment to an active track.

3.2.1.1.9.3.3.3.1.3 Cancellation Message Specific Rejection Criteria

A Rejection message **shall[STARS-SSD-00518]** be transmitted to an ARTCC when a Cancellation message is received from that ARTCC for a flight plan that is not in the system, is currently in handoff status or has been under STARS control.

When Flight Data Processing Mode is enabled for an ARTCC, a Cancellation message received from that ARTCC for a flight which is actively being tracked **shall[STARS-SSD-00519]** be rejected.

3.2.1.1.9.3.3.3.1.4 Flight Plan Specific Rejection Criteria

If adapted, a Rejection message **shall[STARS-SSD-00520]** be transmitted to an ARTCC when a specified message type is received with a logic error or adaptation mismatch for any of the associated fields below:

Message Type	Field
Arrival Flight Plan	6 – Coordination Fix 10 – Destination Airport
Departure Flight Plan	3 – Departure Fix 6 – Outbound Fix
Overflight Flight Plan	6 – Coordination Fix 10 – Outbound Fix

A Rejection message **shall[STARS-SSD-00521]** be transmitted to an ARTCC when a Flight Plan message is received from an ARTCC with inconsistent ACID, ECID or beacon code information as an existing track, or would cause a duplicate ACID condition to occur in the system, or has the same ACID and ECID as another existing flight plan but would not qualify as a leg for or create a new In-Out-In series.

3.2.1.1.9.3.3.3.1.5 Track Data Message Specific Rejection Criteria

A Rejection message (DR) **shall[STARS-SSD-00522]** be transmitted to the facility type identified when the message type identified is received and the condition identified exists for the applicable location based on the below listing:

#	Facility Type	Message Type(s)	Rejection Reason	NAS/OCONUS applies
1	ARTCC or adjacent TRACON	Initiate, Accept or Recall Transfer	STARS ID not contained in output routing field or TCP subset/symbol does not match adaptation	NAS
2	ARTCC or adjacent TRACON	Initiate, Accept or Recall Transfer/Pointout	STARS ID not contained in output routing field or TCP subset/symbol does not match adaptation	OCONUS
3	ARTCC or adjacent TRACON	Accept or Recall Transfer	Track not in handoff or leg of In-Out-In series where active leg not in handoff	Both
4	ARTCC or adjacent TRACON	Initiate, Accept or Recall Transfer	The ECID or TCID does not correspond to a FP	NAS
5	ARTCC or adjacent TRACON	Initiate, Accept or Recall Transfer/Pointout	The ECID or TCID does not correspond to a FP	OCONUS
6	ARTCC	Initiate Transfer	When, based on adaptation, the track coordinates or velocity are not within the adaptable limits, the message is for an Overflight and overflight auto reject is enabled, or Flight Data Processing Mode is enabled	Both
7	ARTCC or adjacent TRACON	Initiate Transfer	Track is already in handoff status	Both
8	ARTCC or adjacent TRACON	Initiate Transfer	When, based on adaptation, no IFDT positional information can be processed and no associated track exists	OCONUS
9	ARTCC	Cancel Transfer/ Cancel Pointout	Track not in handoff/pointout or leg of In-Out-In series where active leg not in handoff	OCONUS
10	ARTCC or adjacent TRACON	Accept or Recall Pointout	Track not in pointout or leg of In-Out-In series where active leg not in pointout	OCONUS
11	ARTCC or adjacent TRACON	Initiate Pointout	When either not associated with an existing track, the track is already in pointout status, the track is in handoff	OCONUS

			status, the track is controlled by the STARS system	
12	ARTCC or adjacent TRACON	Initiate Transfer	When, based on adaptation, STARS can process IFDT positional information by either a Host-Non-Host message specifying a beacon code or site is adapted to reposition when no beacon code is specified the FP is repositioned to a track specified in the message	Both
13	ARTCC or adjacent TRACON	Initiate Transfer	When the system receives an Initiate Transfer (TI) message for a flight that is currently in pointout with that facility	OCONUS

3.2.1.1.9.3.3.3.1.6 Reject Message, Include Reject Reason

When STARS adaptation indicates that the ARTCC/adjacent TRACON can exchange IFDT reject reasons, transmitted Rejection messages **shall[STARS-SSD-00523]** include the reason for rejection (OCONUS only).

3.2.1.1.9.3.3.3.2 Rejection Messages Received From an ARTCC

A message referred to in Rejection response messages received from an ARTCC **shall[STARS-SSD-00524]** be reported to the MCP.

3.2.1.1.9.3.3.3.3 Rejection Messages To Adjacent TRACON for Non-En Route System Messages

A Rejection message (DR) **shall[STARS-SSD-00525]** be transmitted to an adjacent TRACON when a message type specified is received with specified rejection reason:

	Message Type(s)	Rejection Reason
1	Flight Plan, Initiate/Accept/Recall Transfer or Cancellation	When the message contains a format error.
2	Initiate/Accept/Recall Transfer	When the message has no Site ID in the output routing field, or the TCID does not correspond to the flight plan.
3	Initiate Transfer	When the sending facility is not adapted for Non-En Route Flight Plan processing, or the track is currently in handoff from another facility.
4	Accept/Recall Transfer	When flight associated with message is not in handoff.
5	Recall Transfer	When a recall message is received after an Initiate Transfer has been successfully processed.
6	Initiate Transfer	When, based on adaptation, positional information can be processed but the location or velocity are outside adaptable limits, or the track is an Overflight and the overflight rejection option is adapted on.
7	Cancellation	When flight associated with the message is not in the system, is currently or was previously under STARS control, has an inbound handoff accept in progress, or is actively being tracked.

When Flight Data Processing Mode is enabled for an ARTCC, all Initiate Transfers received from an adjacent TRACON that use that ARTCC for message routing, or a Cancellation message is received for a flight that is actively being tracked **shall[STARS-SSD-00526]** be rejected.

3.2.1.1.9.3.3.3.4 Rejection Messages Received From Adjacent TRACON
A message referred to in a Rejection message (DR) received from an adjacent TRACON **shall[STARS-SSD-00527]** be reported to the MCP.

3.2.1.1.9.3.3.4 Retransmit Messages
A Retransmit (DX) message is generated in response to a message that has a Longitudinal Redundancy Check (LRC) or parity error in any field following field 00 or does not have a legitimate End of Message (EOM) character.

3.2.1.1.9.3.3.4.1 Retransmit Messages Transmitted To ARTCC or Adjacent TRACON
A Retransmit message **shall[STARS-SSD-00528]** be transmitted to the facility type specified in response to a specified message received with the error reason specified for the identified system:

	Facility Type	Message Type(s)	Error Reason	NAS/OCONUS applies
1	ARTCC	Departure/Arrival/Overflight Flight Plan, Amendment or Cancellation	A hardware or communication protocol error following the first LRC sequence in the message	Both
2	ARTCC or adjacent TRACON	Initiate/Accept/Recall Transfer	A hardware or communication protocol error following the first LRC sequence in the message	NAS
3	ARTCC or adjacent TRACON	Initiate/Accept/Recall Transfer/Pointout	A hardware or communication protocol error following the first LRC sequence in the message	OCONUS
4	Adjacent TRACON	Initiate/Accept/Recall Transfer or Cancellation	A hardware or communication protocol error following the first LRC sequence in the message	Both

3.2.1.1.9.3.4 Test Data

3.2.1.1.9.3.4.1 Test Data Message Generation and Transmission
A Test Data (TR) message **shall[STARS-SSD-00529]** transmitted to an ARTCC after an adaptable time period has passed since the last acceptable Data Test (DT) or Data Accept (DA) message has been received.

3.2.1.1.9.3.4.2 Data Test Message Generation and Transmission
A Data Test message **shall[STARS-SSD-00530]** be transmitted in response to a validated Test Data message received from an ARTCC and contain the same data in its Remarks field as the received message.

3.2.1.1.9.3.4.3 Remarks Fields Do Not Match

A Data Test message received from an ARTCC containing a Remarks field that is not identical to the Remarks field of a Test Data (TR) message previously transmitted by the terminal automation system **shall[STARS-SSD-00531]** be discarded with an interfacility failure generated and reported to the MCP.

3.2.1.1.9.3.4.4 Test Data Message Receipt

When adaptation indicates that the ARTCC can transmit status information and the Test Data message received indicates a failure or that a previous failure has been cleared and the existing interfacility status is the opposite of the new message, the system **shall[STARS-SSD-00532]** report the new status to the MCP (OCONUS only).

3.2.1.1.9.3.5 Discarded Messages

The Message Type specified **shall[STARS-SSD-00533]** be discarded if the Reason Message Discarded is satisfied per table below:

	Message Type(s)	Reason Message Discarded
1	Unknown	Message Type Unknown
2	All	Source ID does not match adaptation
3	All	Error in the first LRC
4	All	Message caused a Rejection or Retransmit message to be generated
5	Test Data	Causes a Data Test message to be generated
6	Flight Plan	ACID, ECID and status are the same as an existing flight plan and does not form or a add to an In-Out-In leg
7	All except Test	When Interfacility Processing is disabled via TCP entry
8	Data Accept, Retransmit, Rejection or Test Data	Format error
9	Track Update	Flight Data Processing mode is enabled for the sending ARTCC
10	Track Update Segment	Segment contains an Error

CENRAP messages (TS and TP) **shall[STARS-SSD-00534]** be recognized but ignored without generating error reports.

3.2.1.1.9.3.6 Retransmissions

3.2.1.1.9.3.6.1 Maximum Number of Retransmissions Exceeded

A Retransmit (DX) message **shall[STARS-SSD-00535]** be discarded when the adaptable number of retransmissions for that message has been exceeded.

3.2.1.1.9.3.6.2 Retransmission To an ARTCC

3.2.1.1.9.3.6.2.1 Retransmission To ARTCC Due To Retransmit Message

In accordance with the table below, the listed Message Type **shall[STARS-SSD-00536]** be retransmitted upon receipt of a Retransmit message from an ARTCC if the Retransmission Reason is satisfied and the adaptable number of retransmissions has not been exceeded:

	Message Type(s)	Retransmission Reason	NAS/OCONUS applies
1	Departure, Beacon Terminate, VFR and Request Flight Plan	Always	Both
2	Initiate/Accept/Recall Transfer	Always for Accept and Recall, only if updating track position and velocity for Initiate	NAS
3	Initiate/Accept/Recall Transfer/Pointout	Always for Accept and Recall, only if updating track position and velocity for Initiate	OCONUS

3.2.1.1.9.3.6.2.2 Retransmission To ARTCC Due to Lack of Response

In accordance with the table below, the listed Message Type **shall[STARS-SSD-00537]** be retransmitted when no response to it is received within an adaptable period of time, the Retransmission Reason is satisfied and the adaptable number of retransmissions has not been exceeded:

	Message Type(s)	Retransmission Reason	NAS/OCONUS applies
1	Departure, Beacon Terminate, VFR and Request Flight Plan	Always	Both
2	Initiate/Accept/Recall Transfer	Always for Accept and Recall, only if updating track position and velocity for Initiate	NAS
3	Initiate/Accept/Recall Transfer/Pointout	Always for Accept and Recall, only if updating track position and velocity for Initiate	OCONUS

3.2.1.1.9.3.6.3 Retransmission To Adjacent TRACON

3.2.1.1.9.3.6.3.1 Retransmission To Adjacent TRACON Due to Retransmit Message

In accordance with the table below, the listed Message Type **shall[STARS-SSD-00538]** be retransmitted to an Adjacent TRACON upon receipt of a Retransmit message, the Retransmission Reason is satisfied and the adaptable number of retransmissions has not been exceeded:

	Message Type(s)	Retransmission Reason	NAS/OCONUS applies
1	Initiate/Accept/Recall Transfer (TM/TN/TL), Cancellation, Non-En Route Flight Plan	Always, except for Initiate which is only if updating track position and velocity	Both
2	Initiate/Accept/Recall Transfer (TI/TA/TA)	Always, except for Initiate which is only if updating track position and velocity	NAS
3	Initiate/Accept/Recall Transfer/Pointout (TI/TA/TA)	Always, except for Initiate which is only if updating track position and velocity	OCONUS

3.2.1.1.9.3.6.3.2 Retransmission To Adjacent TRACON Due to Lack of Response

In accordance with the table below, the listed Message Type **shall[STARS-SSD-00539]** be retransmitted to an Adjacent TRACON when no response to it is received within an adaptable period of time, the Retransmission Reason is satisfied and the adaptable number of retransmissions has not been exceeded:

	Message Type(s)	Retransmission Reason	NAS/OCONUS applies
1	Initiate/Accept/Recall Transfer (TM/TN/TL), Cancellation, Non-En Route Flight Plan	Always accept for Initiate which is only if updating track position and velocity	Both
2	Initiate/Accept/Recall Transfer (TI/TA/TA)	Always accept for Initiate which is only if updating track position and velocity	NAS
3	Initiate/Accept/Recall Transfer/Pointout (TI/TA/TA)	Always accept for Initiate which is only if updating track position and velocity	OCONUS

3.2.1.1.9.3.6.4 Retransmission Limit Exceeded

A message that has exceeded the adapted number of retransmissions that may be attempted **shall[STARS-SSD-00540]** be reported to the MCP.

3.2.1.1.9.3.7 Message Priorities

Messages containing position and velocity track information **shall[STARS-SSD-00541]** be transmitted within their current radar scan period. This does not include TZ messages.

Messages requiring responses **shall[STARS-SSD-00542]** be transmitted without delaying response message transmission to a point where retransmissions occur at an ARTCC.

Transmission of Test Data messages **shall[STARS-SSD-00543]** have priority over the transmission of other interfacility data messages.

3.2.1.1.9.4 Traffic Flow Management System Messages

Traffic Flow Management messages transferred between STARS and the TMU **shall[STARS-SSD-00544]** be processed as defined in the Standard Terminal Automation Replacement System (STARS) / Traffic Flow Management System (TFMS) ICD, NAS-IC-21052414.

3.2.1.1.10 TCP Data Entry

3.2.1.1.10.2 TCP Entry

All command entries specified for a TCW or TDW **shall[STARS-SSD-00545]** be accepted and processed at a corresponding TCP.

TCP input **shall[STARS-SSD-00546]** support a repetitive input mode where a command may be repetitively executed with different parameters without re-entering the initiating function key.

TCP input **shall[STARS-SSD-00547]** support the first character of an ACID and a 2 character abbreviation for an aircraft type entry to automatically be replaced by a corresponding adapted character string or aircraft type respectively.

3.2.1.1.10.3 Implied Controller Entries

TCP input **shall[STARS-SSD-00548]** employ all available context-sensitive information to expedite repetitive system entries.

Based on a defined command priority, when a track is eligible for an implied entry relating to both alert/special condition code acknowledgment and handoff/pointout action, the handoff/pointout action **shall[STARS-SSD-00549]** be performed.

The system **shall[STARS-SSD-00550]** provide the capability to adapt alternate behavior for command input sequences depending on the currently selected configuration plan.

TCP input containing a one character TCP identifier **shall[STARS-SSD-00551]** derive the assigned subset based on the priority to use the subset of the first logical TCP assignment, else use the subset of the coupled TCP, if only coupled to one TCP or use the subset of the physical TCP for the entering position.

The priority for an implied slew command **shall[STARS-SSD-00552]** be as follows:

a. Handoff (Accept, Recall or Recall Redirect)
b. Pointout (Accept, Recall or Remove Pointout Color or Reject/Cancel Pointout indication)
c. Acknowledge Aural Alarm and Steady Blinking Alert
d. Steady Blinking Cancelled FP indicator
e. Acknowledge Beacon Code Mismatch
f. Display Flight Data for Suspended Track
g. Remove Duplicate Beacon
h. Remove Duplicate Target Address
i. Remove Blinking Indicators
j. Steady Blinking Warnings
k. Remove ACID/Target ID mismatch indicator
l. Remove ADB Indicator
m. Remove data block color of previously owned track and “RD” redirection indicator if displayed
n. Forced Handoff Accept
o. Remove Frozen Track not in Alert from Display
p. Beacon Code Readout of Associated Track
q. Quick Look Track or remove FDB forced by adapted special code
r. Initiate Control of Special LDB
s. Remove Automatic Acquisition Failure Indication for Unassociated Track
t. Beacon Code Readout of Unassociated Track

3.2.1.1.10.3.1 Implied Compound Commands

TCP input of an adapted implied compound command sequence for the current configuration **shall[STARS-SSD-00553]** perform one or more of the following functions based on adapted values for a qualifying track:

a. accept an aircraft in handoff to the receiving TCP
b. modify scratchpad data
c. modify the data block leader line direction
d. transfer ownership to another TCP
e. display the flight plan in the Readout Area
f. modify aircraft type, flight status or flight rules

If adapted, re-entry of an adapted implied compound command sequence **shall[STARS-SSD-00554]** restore the previous scratchpad and/or leader direction, if applicable, for the track provided they have not been subsequently modified by another command input.

Site adaptation **shall[STARS-SSD-00555]** specify 1 to 4 character implied compound commands.

For each implied compound command, site adaptation **shall[STARS-SSD-00556]** specify in which configuration plan the command is allowed and which tracks qualify for the command based upon the type of flight and optional Entry/Exit fixes, Scratchpad, and/or Airport for the track.

For each implied compound command, site adaptation **shall[STARS-SSD-00557]** optionally specify Scratchpad 1 or 2 text, Leader Direction along with whether the Leader direction applies to the entering TCP or all TCPs where the track is displayed with a full data block, logical TCP, Aircraft Type, Flight Status or Rules and an indication of whether to display the flight plan in the Readout Area.

Site adaptation **shall[STARS-SSD-00558]** specify per TCP whether the implied compound command will update the Scratchpad and Leader Direction for un-owned tracks, and/or accept the handoff for tracks in handoff to this TCP.

3.2.1.1.10.4 Macro Command

Adaptable macro commands **shall[STARS-SSD-00559]** execute multiple TCP entries via a single command entry.

A macro command **shall[STARS-SSD-00560]** be capable of being adapted to incorporate existing flight data into command parameters as well as, to include characters from the adapted macro definition in combination with characters from a flight data field.

3.2.1.1.10.5 General Validation Criteria

3.2.1.1.10.5.1 Operator Authority

Per adaptation, the entering operator class **shall[STARS-SSD-00561]** be verified for authority to perform the requested command.

3.2.1.1.10.5.2 Command Logic Override

When entered, a logic override **shall[STARS-SSD-00562]** permit a TCP, even one without airspace assignment, to perform controller actions on an aircraft which is allocated to another TCP for control actions.

TCP input from adapted input devices **shall[STARS-SSD-00563]** perform controller actions on an aircraft which is allocated to another TCP for control actions.

3.2.1.1.10.5.3 Data Errors

Data entered into the system **shall[STARS-SSD-00564]** be verified for the correct format and within parameter bounds as well as checked for validity.

3.2.1.1.10.5.7 Duplicate Beacon

The TCP **shall[STARS-SSD-00565]** be notified when making entries involving an aircraft or flight plan with a duplicate beacon code or ACID.

TCP input on a track indicating duplicate beacon in its data block **shall[STARS-SSD-00566]** suppress the duplicate beacon indication.

3.2.1.1.10.5.8 Adaptable Command Parsing

TCP input will be parsed and compared to input sequences defined in adaptation upon a match the command function associated with that sequence **shall[STARS-SSD-00567]** be initiated.

The mapping of physical keys to semantic elements **shall[STARS-SSD-00568]** be adaptable for each style of input set.

3.2.1.1.10.5.9 Track Selection

When the Multi Track functionality is enabled at the TCP, and a slew entry is ambiguous with respect to track selection, the selection **shall[STARS-SSD-00569]** be resolved via additional TCP interaction and the selected track indicated prior to command execution.

Any TCP input entered with the left mouse button, while the track is displayed in a Dwell State, **shall[STARS-SSD-00570]** be applied to the track.

3.2.1.1.10.5.10 Duplicate Target Address

TCP input on a track indicating duplicate Target Address in its data block **shall[STARS-SSD-00571]** suppress the duplicate Target Address indication.

3.2.1.1.10.6 Control of Data Blocks

3.2.1.1.10.6.1 Pointout

Pointout provides an indication to the receiver of the pointout status. The receiver can accept, reject or take control of the pointout track. The pointout initiator's data block will give indication of the receiver's action. Intrafacility pointouts are between TCPs at the TRACON while Interfacility pointouts are between a TRACON TCP and an ARTCC/Adjacent TRACON.

3.2.1.1.10.6.1.1 Pointout - Recall
TCP input **shall[STARS-SSD-00572]** terminate the pointout of a selected aircraft by the pointout initiator.

3.2.1.1.10.6.1.2 Pointout Acknowledge
TCP input from the pointout receiver **shall[STARS-SSD-00573]** accept or reject the pointout (intrafacility only).

When the Pointout Accept History Function is enabled in adaptation, the pointout accept history **shall[STARS-SSD-00574]** contain a list of the most recent TCPs that have accepted a pointout for the track.

The pointout accept history **shall[STARS-SSD-00575]** be ordered with the most recent TCP that accepted a pointout being the first entry and proceed until the least recent TCP is entered.

When a TCP accepts a pointout for a track and the TCP is already in the pointout accept history, the TCP **shall[STARS-SSD-00576]** be relocated from its current location to the most recent.

The pointout accept count for a track **shall[STARS-SSD-00577]** correspond to the number of entries currently in its pointout accept history.

3.2.1.1.10.6.1.3 Pointout Initiate
TCP input on an associated track **shall[STARS-SSD-00578]** initiate an intrafacility pointout to force a full data block on the TCW or TDW of the specified TCP or, based upon adaptation, initiate an interfacility pointout to an ARTCC/Adjacent TRACON facility or specific TCP.

3.2.1.1.10.6.1.4 Pointout Handoff
TCP input from the pointout receiver **shall[STARS-SSD-00579]** transfer ownership to the pointout receiver when an intrafacility pointout is in progress for the specified track.

3.2.1.1.10.6.2 Control Operations

3.2.1.1.10.6.2.1 Arrival Fix Areas
TCP input **shall[STARS-SSD-00580]** enable, disable or modify auto-acquisition ranges for arrival tracks within one or more geographic areas.

When no valid track altitude exists, adaptation is set to use the pilot-reported altitude and a manually-entered pilot reported altitude is present the system **shall[STARS-SSD-00581]** use that altitude to determine whether the aircraft satisfies the altitude criteria for inclusion in the arrival fix area.

When no valid track altitude exists, and pilot-reported altitude is not present or being used the system **shall[STARS-SSD-00582]** use an adaptable parameter per individual arrival fix area to determine whether the aircraft satisfies the altitude criteria for inclusion in the arrival fix area.

3.2.1.1.10.6.2.2 Initiate Control

TCP input **shall[STARS-SSD-00583]** manually associate an active track or create an unsupported datablock with flight data based upon ACID, discrete assigned beacon code or data list line identified, and other optionally entered data.

TCP input **shall[STARS-SSD-00584]** manually associate an active track that is transmitting a special automatic adapted beacon code with adapted and optionally entered flight data.

A keyboard entry consisting of a single key followed by a discrete beacon code and an optional type of flight **shall[STARS-SSD-00585]** create a local flight plan with the following data:

a. ACID - adapted string (1 to 3 characters) followed by the entered beacon code
b. Assigned beacon - the entered beacon code
c. Flight Status – Enroute
d. Flight Rules - "E" (default) or entered value
e. Coordination time - current time
f. other flight data - blank

3.2.1.1.10.6.2.3 Suspend Track

For a track that is not displaying a beacon code mismatch, TCP input **shall[STARS-SSD-00586]** suspend the display of the track's data block while continuing to display TPA and ATPA indicators.

For a track that is displaying a beacon code mismatch, TCP input to suspend the display of its data block **shall[STARS-SSD-00587]** disassociate the track from its flight plan, and cause the flight plan to become suspended but also allow it to remain eligible for re-acquisition.

TCP input **shall[STARS-SSD-00588]** enable or inhibit the display of altitude for suspended tracks, and will supersede the adapted setting.

3.2.1.1.10.6.2.4 Activate Suspended Track

TCP input **shall[STARS-SSD-00589]** re-display a suspended track.

3.2.1.1.10.6.2.5 Terminate Flight Data - Single Track

TCP input **shall[STARS-SSD-00590]** terminate flight data from an active track and remove the display of any TPA J-Ring or Cone or an inactive flight plan including legs of an In-Out-In series if specified.

3.2.1.1.10.6.2.6 Terminate All Tracks

TCP input **shall[STARS-SSD-00591]** terminate all aircraft flight data under the control of a selected position, remove all TPA J-Rings and Cones affected by the entry and terminate flight data regardless of ownership based on coordination time specified.

3.2.1.1.10.6.2.7 Track Reposition

TCP input **shall[STARS-SSD-00592]** transfer flight data from an associated track to an unassociated track or to create an unsupported datablock, or from an unsupported datablock to an unassociated track or to reposition an unsupported datablock.

TCP input to reposition flight data **shall[STARS-SSD-00593]** transfer the display or remove any TPA J-Ring or TPA Cone from the associated track to the unassociated track upon track reposition or from the original track respectively.

3.2.1.1.10.6.2.8 Remove Frozen Track from Display
TCP input by the track owner (slew/enter) to unfreeze a track that is not in alert **shall[STARS-SSD-00594]** remove the frozen track from the display and display the flight plan in the Coast/Suspend list.

3.2.1.1.10.6.3 Handoff

3.2.1.1.10.6.3.1 Initiate
TCP input **shall[STARS-SSD-00595]** initiate a handoff to another position based upon the identification of the next controller position and a specific aircraft, unless there is a beacon code mismatch with the track.

Handoff initiation **shall[STARS-SSD-00596]** be accepted when the flight has been previously handed off and the destination controller is in the same terminal area as the owner of the flight.

Upon acceptance, the original flight owner **shall[STARS-SSD-00597]** display the track in the Data Block Owned/Previously Owned Blink Color for an adaptable period of time and thereafter it will be displayed similarly to the new owner in the Data Block Owned/Previously Owned Color.

3.2.1.1.10.6.3.2 Recall
TCP input **shall[STARS-SSD-00598]** recall a handoff based upon identification of the aircraft by the owning TCP.

3.2.1.1.10.6.3.3 Forced Recall
TCP input **shall[STARS-SSD-00599]** unconditionally recall an aircraft in handoff based upon identification of the aircraft by the sending TCP.

3.2.1.1.10.6.3.4 Accept
TCP input **shall[STARS-SSD-00600]** accept an aircraft in handoff based on either identification of the aircraft by the receiving TCP, nearest proximity to adapted position or if intrafacility type identification of aircraft using command override.

3.2.1.1.10.6.3.5 Forced Accept
TCP input **shall[STARS-SSD-00601]** unconditionally accept an aircraft in handoff based upon identification of the aircraft by the receiving TCP, change the position symbol of an externally owned aircraft to the pending local owner if the flight is not in handoff or based on adaptation, also display the ARTCC symbol in the full data block if the flight is not in handoff.

3.2.1.1.10.6.3.6 Automatic Handoff Processing
Automatic handoff for either a specific aircraft or an entire TCP **shall[STARS-SSD-00602]** be enabled or disabled via a TCP entry for Interfacility and Intrafacility processing.

3.2.1.1.10.6.3.7 Interfacility and Intrafacility Redirection of Handoff

If enabled via adaptation, TCP input **shall[STARS-SSD-00603]** redirect an Interfacility or Intrafacility handoff to a specified TCP.

TCP input **shall[STARS-SSD-00604]** recall a redirected handoff to the initial originator and clear all handoff indicators or to the last position to redirect a handoff and place the track in handoff to that position.

3.2.1.1.10.6.3.8 Transfer Ownership

TCP input **shall[STARS-SSD-00605]** based on adaptation, transfer ownership of a specified flight to the second or third keyboard at the current owner's TCW/TDW.

3.2.1.1.10.6.4 Request Range and Heading

TCP input **shall[STARS-SSD-00606]** request range and heading from a selected aircraft to a specified fix or airport.

3.2.1.1.10.6.5 Data Block Force

For the purpose of the requirements in this section, ownership includes pending owner, current owner and previous owner following an interfacility handoff, who is still displaying the data block in the owned color.

TCP input **shall[STARS-SSD-00607]** toggle an associated track between a full datablock and a partial datablock from an unowned position.

TCP input to force pointout an associated track **shall[STARS-SSD-00608]** cause it to display a full data block, on the entered TCP(s), as follows:

a. At the track owner's position will remain displayed in the adapted Data Block Owned color unless adapted to allow owner pointouts to themselves and the enterer is the track owner.
b. At the track owner's position when adapted to allow owner pointouts to themselves and the enterer is the track owner, the data block will be displayed in the pointout accepted state.
c. At the non-owning positions the data block will be displayed in the pointout accepted state.

TCP input **shall[STARS-SSD-00609]** enable/disable the display of an adapted data block type subject to a combination of adapted conditions.

Except for the flight plan owner's position, TCP input **shall[STARS-SSD-00610]** cause a full data block to be displayed in the pointout accepted state for a track, on a TCP of the entered adaptable group or "ALL" TCPs.

TCP input **shall[STARS-SSD-00611]** remove the pointout accepted state from an associated track, leaving the full datablock in a non-pointout color at the entering TCP.

TCP input to force a pointout of an unassociated flight plan **shall[STARS-SSD-00612]** cause it to display a full data block in the adapted Data Block Owned color or pointout accepted state, depending upon ownership, after it becomes associated on the entered TCP(s).

When TCP input has identified an associated or unassociated flight to be displayed in a pointout accepted state, after it associates if necessary, the full data block **shall[STARS-SSD-00613]** be displayed at the entered TCP unless the TCP is the track owner.

3.2.1.1.10.6.6 Predicted Track Line (PTL)

TCP input **shall[STARS-SSD-00614]** enable/disable the display of PTLs that indicate a track's current speed and heading .

TCP input **shall[STARS-SSD-00615]** adjust the prediction time up to 5 minutes ahead, except in FMA mode which will be limited by Caution alert times.

3.2.1.1.10.6.7 Minimum Separation

TCP input **shall[STARS-SSD-00616]** activate/deactivate a minimum separation calculation or a TPA J-Ring or Cone for a designated pair of tracks.

Calculation results **shall[STARS-SSD-00617]** be displayed in nautical miles with two digits to the right of the decimal point.

TCP input **shall[STARS-SSD-00618]** adjust the radius of the TPA J-Ring or Cones from 1 to 30 nautical miles incrementally.

The TPA J-Ring or Cone **shall[STARS-SSD-00619]** be drawn as a circle or circular sector with the origin at the track position using the specified radius and if a Cone an arc centered at the track's heading.

Display of a TPA cone **shall[STARS-SSD-00620]** be inhibited when the track is stationary.

TCP input **shall[STARS-SSD-00621]** remove the display of TPA J-Rings or Cones from all tracks on the display.

TCP input **shall[STARS-SSD-00622]** enable or inhibit the display of the radius on a single or all track(s) displaying a TPA/ATPA information on the display.

The display of a TPA/ATPA information **shall[STARS-SSD-00623]** be removed at all displays when a track is disassociated from its flight plan and the display of a TPA J-Ring and TPA Cone restored when it re-associates.

The display of a TPA/ATPA information **shall[STARS-SSD-00624]** be prohibited for a track when predefined conditions are met.

Each display **shall[STARS-SSD-00625]** support a combined total of up to 50 TPA J-Rings, TPA Cones, ATPA Monitor Cones, ATPA Warning Cones, and ATPA Alert Cones.

When the number of TPA J-Rings and TPA/ATPA Cones has reached capacity at a display and an ATPA Warning or ATPA Alert Cone becomes eligible for display, an existing TPA J-Ring or

TPA/ATPA Cone **shall[STARS-SSD-00626]** be removed from the display based on a priority scheme.

3.2.1.1.10.6.7.1 Automated Terminal Proximity Alerts

TCP input **shall[STARS-SSD-00627]** enable or disable ATPA system-wide, send a status message to the MCP and when enabled set up ATPA with adapted parameters.

If ATPA is enabled, TCP input **shall[STARS-SSD-00628]** enable or disable an ATPA Approach Volume system-wide, send a status message to the MCP and when enabled set up 2.5 nmi Reduced Separation and Landing Speed Offset per adaptation parameters.

If ATPA is enabled and a 2.5 nmi Reduced Separation is adapted for the enabled ATPA Approach Volume, TCP input **shall[STARS-SSD-00629]** enable or disable the 2.5 nmi Reduced Separation system-wide and send a status message to the MCP.

If ATPA is enabled system-wide, TCP input **shall[STARS-SSD-00630]** enable or inhibit the display of ATPA Warning and Alert Cones at the enterer's display, send a status message to the MCP and set each track that qualifies for a warning or alert to the same state.

If ATPA is enabled system-wide, TCP input **shall[STARS-SSD-00631]** enable or inhibit the display of ATPA Monitor Cones or In-Trail Distance at the enterer's display and send a status message to the MCP.

TCP input **shall[STARS-SSD-00632]** enable or inhibit the display of ATPA Warning and Alert Cones for an associated track at the enterer's display when specific conditions are met and will send a status message to the MCP.

TCP input to inhibit or enable the display of ATPA Warning and Alert Cones for an associated track at the enterer's display **shall[STARS-SSD-00633]** set the track to be eligible to display *TPA or remove the track's eligibility to display *TPA, respectively, at the enterer's display.

If ATPA is enabled system-wide, TCP input **shall[STARS-SSD-00634]** display in the Readout Area disabled ATPA Approach Volumes that have been disabled by TCP input since the last configuration change.

TCP input **shall[STARS-SSD-00635]** enable or inhibit the display of ATPA Monitor Cones for an associated track at the enterer's display when specific conditions are met and will send a status message to the MCP.

TCP input **shall[STARS-SSD-00636]** enable or inhibit the display of ATPA In-Trail Distance for an associated track at the enterer's display when specific conditions are met and will send a status message to the MCP.

TCP input to enable or inhibit the display of ATPA Monitor Cones or In-Trail Distance at the enterer's display **shall[STARS-SSD-00637]** set the display of ATPA Monitor Cones or In-Trail Distance for each track that qualifies at the enterer's display to the same state.

If ATPA is enabled system-wide, TCP input for an associated track **shall[STARS-SSD-00638]** enable or inhibit the override of ATPA eligibility criteria, and send a status message to the MCP.

3.2.1.1.10.6.8 Alarms and Alerts

TCP input **shall[STARS-SSD-00639]** acknowledge a LA/CA/MCI or transponder indicator condition at the entering TCP to cause blinking and aural indications to cease.

A distinct TCP input **shall[STARS-SSD-00640]** acknowledge system–wide a transponder indicator condition for an unassociated track.

TCP input **shall[STARS-SSD-00641]** declare or delete emergency, hijack, or radio failure condition for an associated track not squawking an equivalent beacon code.

When the tracks involved in the condition being acknowledged are owned by the entering position, then the acknowledgement **shall[STARS-SSD-00642]** apply at all TCP positions where the alarm/alert is displayed and/or aurally indicated.

TCP input **shall[STARS-SSD-00643]** declare or delete an adapted special condition for an associated track if the track is not already transmitting a special condition code and the track is owned at this display.

TCP input **shall[STARS-SSD-00644]** acknowledge a Wrong Airport alert at the entering TCW/TDW to cause aural indications to cease.

3.2.1.1.10.6.9 RNAV Status Delete Regions

TCP input **shall[STARS-SSD-00645]** request display of all enabled RNAV Status Delete Regions in the preview area until the area is full at which time the word “MORE” is displayed and depressing ENTER will display the remaining regions.

3.2.1.1.10.6.10 Control of Aircraft Type Display

When aircraft type is displayed in the full data block as a timeshared field, TCP input **shall[STARS-SSD-00646]** inhibit display of aircraft type in the full data block of the specified track.

When aircraft type is suppressed or inhibited from display in the full data block, TCP input by a position that is or is not the track owner or is or is not a position coupled to the track owner **shall[STARS-SSD-00647]** force the display of aircraft type without timesharing in the full data block of the specified track system-wide or at the enterer's display respectively for an adaptable interval.

3.2.1.1.10.6.11 Control of ADS-B/Non ADS-B Indicator

If enabled through site adaptation, TCP input **shall[STARS-SSD-00648]** enable/disable the display of the ADS-B/Non ADS-B indicators in the data block.

3.2.1.1.10.6.12 Control of Code/Callsign Pairs

TCP input in EFS workstation mode **shall[STARS-SSD-00649]** delete the ACID from the data block for an unassociated track that displays the ACID received from FSL.

If an existing code/callsign pair is not received from FSL for a design period of time, and no track exists with a matching discrete beacon code, the ACID **shall[STARS-SSD-00650]** be deleted.

TCP input at a workstation in DSA mode **shall[STARS-SSD-00651]** delete the ACID from the data block for an unassociated track that is displaying an ACID, thereby removing the code/callsign association of the track with the discrete beacon code and displaying a limited data block (STARS ELITE only).

3.2.1.1.10.6.13 Control of Requested Altitude

TCP input **shall[STARS-SSD-00652]** either enable/disable the display of requested altitude in the data block for a single track or all tracks at the entering TCP.

3.2.1.1.10.7 Control of Flight Data

3.2.1.1.10.7.1 Automatic Flight Plan Generation

TCP input **shall[STARS-SSD-00653]** generate a flight plan for a selected aircraft using the existing data block information.

TCP input **shall[STARS-SSD-00654]** support a quick ACID entry mode allowing a flight ACID to be created using adapted characters followed by two automatically generated numeric characters.

Adaptation data **shall[STARS-SSD-00655]** specify if the automatic flight plan created by shall's above are displayed in the pointout accepted state.

3.2.1.1.10.7.2 Display Flight Data

TCP input **shall[STARS-SSD-00656]** display flight data for either a selected aircraft, or all legs in a selected In-Out-In series.

A TCP input (slew, enter) that selects a suspended track **shall[STARS-SSD-00657]** display flight data for the selected track.

3.2.1.1.10.7.3 Intrafacility Flight Data Entry

TCP input **shall[STARS-SSD-00658]** enter intrafacility flight data consisting of an ACID and several optional fields.

TCP input of an adapted airport mnemonic in scratchpad 1 or 2 **shall[STARS-SSD-00659]** set the flight's exit fix to the airport if fix data is not entered.

When TCP input has entered flight data without specifying the adapted default scratchpad the software **shall[STARS-SSD-00660]** automatically assign the data for that scratchpad with the default data that matches the active configuration for the flights owner.

For each TCP entered flight plan, the system **shall[STARS-SSD-00661]** derive an aircraft category or an RNAV symbol, and then derive a weight class or set the weight class to Unknown.

TCP entry of entry/exit fix data, flight status and airport for intrafacility flight data entry **shall[STARS-SSD-00662]** be accepted in abbreviated form where the entry and/or exit fix point, flight status and airport is entered as a single character that is adapted to identify corresponding data.

3.2.1.1.10.7.4 Modify Flight Data

TCP input **shall[STARS-SSD-00663]** allow the modification of intrafacility flight data for an aircraft identified by the ACID, discrete beacon code, pointer selection or data list line identifier.

TCP input of an implied form **shall[STARS-SSD-00664]** allow the modification of intrafacility flight data for an aircraft identified by pointer selection.

A single TCP input **shall[STARS-SSD-00665]** allow the modification of intrafacility flight data for an aircraft identified by pointer selection.

When none of the legs of an In-Out-In series are active, TCP input **shall[STARS-SSD-00666]** modify all legs if the ACID or beacon code fields are modified for any of the legs.

TCP input to update the beacon code of an active or inactive leg of an In-Out-In series **shall[STARS-SSD-00667]** respectively either modify all legs of the series or none if another leg is active.

TCP input to update the ACID of a leg of an In-Out-In series **shall[STARS-SSD-00668]** be rejected if any of the legs are active.

TCP input to update the coordination time of any inactive leg of an In-Out-In series **shall[STARS-SSD-00669]** cause its deletion timer to be re-initiated.

TCP input of an adapted airport mnemonic in scratchpad 1 or 2 for an associated or unassociated flight plan **shall[STARS-SSD-00670]** respectively either set its exit fix to the airport and the flight type to arrival or set its exit fix to the airport if fix data is not entered.

When TCP input has entered flight data for an inactive flight plan without specifying the adapted default scratchpad the software **shall[STARS-SSD-00671]** automatically assign the data for that scratchpad with the default scratchpad that-matches the active configuration for the flight plan's owner.

TCP input to modify the ACID or scratch pad data of a track that is not controlled by the TCP **shall[STARS-SSD-00672]** cause the data block to blink at the owner's display for an adapted interval.

TCP input to modify the aircraft type or the aircraft category or the RNAV status indicator **shall[STARS-SSD-00673]** derive an aircraft category or an RNAV status indicator, and then derive a weight class.

TCP input to modify the ownership of a flight that is not controlled by the TCP **shall[STARS-SSD-00674]** cause the full data block to blink at the position that no longer owns the flight for an adapted interval.

When the blinking ceases at the TCP that no longer controls the track, it **shall[STARS-SSD-00675]** display a partial data block at that TCP unless an adaptable parameter is set to retain the full data block.

Unless it was suspended while in beacon code mismatch, a suspended flight **shall[STARS-SSD-00676]** be automatically unsuspended when its ownership or ACID is modified by the non-controlling TCP.

If the flight is inactive when its ACID or ownership is modified, the blinking **shall[STARS-SSD-00677]** begin when the flight becomes active.

Entry/exit fix data for flight data modify **shall[STARS-SSD-00678]** be accepted in abbreviated form where either fix point is entered as a single character adapted to identify a corresponding fix.

3.2.1.1.10.7.5 VFR Interfacility Flight Data Entry

TCP input **shall[STARS-SSD-00679]** enter VFR interfacility flight data for an aircraft identified by ACID, destination identifier data, aircraft type and other optional fields.

The system **shall[STARS-SSD-00680]** accept any 3 or 4 alphanumeric-characters as a destination identifier value for TCP entered VFR interfacility flight data.

TCP input **shall[STARS-SSD-00681]** utilize existing ACID, aircraft type and fix/destination identifier data associated with a local VFR track as VFR Interfacility flight data.

An adaptable default entry fix **shall[STARS-SSD-00682]** be provided for each TCP.

When TCP input has entered flight data for an inactive flight plan without specifying the adapted default scratchpad the software **shall[STARS-SSD-00683]** automatically assign the data for that scratchpad from adaptation, based on the active configuration and other adapted criteria.

3.2.1.1.10.7.6 Flight Data - Formation Breakup

TCP input **shall[STARS-SSD-00684]** select a formation flight leader and aircraft for creation of flight plans for the selected aircraft.

TCP input **shall[STARS-SSD-00685]** modify the number of aircraft for a flight plan.

3.2.1.1.10.7.7 Manually Entered Departure Flight Data

TCP input **shall[STARS-SSD-00686]** uniquely identify manually entered departure flight data.

3.2.1.1.10.7.8 Request Flight Data
TCP input **shall[STARS-SSD-00687]** request the transfer of flight plan information from the ARTCC for a specified track.

3.2.1.1.10.7.9 Flight Plan - Retransmit
TCP input **shall[STARS-SSD-00688]** retransmit a VFR flight plan when the ARTCC rejects a VFR flight plan and indicates an error.

3.2.1.1.10.7.10 Beacon Code Update
TCP input **shall[STARS-SSD-00689]** update a flight plan's assigned beacon code with the reported beacon code for an owned associated track in a code mismatch condition.

3.2.1.1.10.7.11 Save Flight Data
TCP input **shall[STARS-SSD-00690]** save pertinent flight and/or track data for offline diagnostic purposes.

3.2.1.1.10.7.12 Suspended Flight Plan
TCP input **shall[STARS-SSD-00691]** suspend/unsuspend an inactive flight plan without affecting its eligibility for automatic association with a track.

3.2.1.1.10.8 Control of Displayed Data

3.2.1.1.10.8.1 Converging Runway Display Aid (CRDA)

3.2.1.1.10.8.1.1 CRDA Application
TCP input **shall[STARS-SSD-00692]** select/inhibit a runway for CRDA processing at the entering TCP.

3.2.1.1.10.8.1.2 CRDA Special Aircraft
TCP input **shall[STARS-SSD-00693]** select/inhibit the conditional or unconditional display of a CRDA ghost target for all or a selected aircraft at the entering TCP.

3.2.1.1.10.8.1.5 CRDA Display Options
TCP input **shall[STARS-SSD-00694]** select/inhibit the display of the target and image reference points and lines, as well as the qualification region for the selected runway of an enabled CRDA application.

TCP input **shall[STARS-SSD-00695]** select/inhibit the display in the Readout Area of information from the data block of the radar target associated with a selected ghost target or the display of an adapted expanded datablock for a selected ghost target.

3.2.1.1.10.8.2 Final Monitor Aid (FMA)

3.2.1.1.10.8.2.1 FMA - TCW Enable/Disable
TCP input **shall[STARS-SSD-00696]** enable or disable FMA processing for the entering TCW.

3.2.1.1.10.8.2.2 Caution/Warning Alerts
TCP input **shall[STARS-SSD-00697]** select and inhibit an aircraft from all FMA alerts.

TCP input **shall[STARS-SSD-00698]** acknowledge the current FMA Warning alert for a selected aircraft.

3.2.1.1.10.8.2.3 Active Monitored Zones (AMZs)
TCP input **shall[STARS-SSD-00699]** select an AMZ, with default settings, at each TCW.

3.2.1.1.10.8.2.4 FMA Display Settings
TCP input **shall[STARS-SSD-00700]** select a magnification ratio between 1 and 8 in integer steps.

3.2.1.1.10.8.3 CA/MCI Inhibit
TCP input **shall[STARS-SSD-00701]** select/inhibit CA/MCI alert for selected aircraft pairs, entering TCP, and any specified track.

Upon handoff initiate, if the CA/MCI alert is inhibited, the alert **shall[STARS-SSD-00702]** be enabled automatically for that track.

If adapted, TCP input **shall[STARS-SSD-00703]** select/inhibit MCI alert for a selected associated track and specified beacon code.

When MCI alerting is inhibited for a selected associated track and specified beacon code, MCI alert suppression **shall[STARS-SSD-00704]** continue to apply if the selected associated track has coasted and reacquired since entry.

3.2.1.1.10.8.4 MSAW Alert Inhibit
TCP input **shall[STARS-SSD-00705]** select and inhibit MSAW alert for a specified aircraft.

Upon handoff initiate for a given non-VFR track, if the MSAW alert is inhibited, the alert **shall[STARS-SSD-00706]** be enabled automatically for that track when so adapted.

3.2.1.1.10.8.5 Surveillance/Altimeter Information Display
TCP input **shall[STARS-SSD-00707]** select/inhibit the display of the altimeter(s) on a TCP.

TCP input **shall[STARS-SSD-00708]** initiate readout of pre-defined information for the surveillance/altimeter tile that includes the designated location.

3.2.1.1.10.8.6 Automatic Terminal Information System (ATIS)
TCP input **shall[STARS-SSD-00709]** select/inhibit the display of manually entered ATIS(s) data.

3.2.1.1.10.8.7 Unique General Information
TCP input **shall[STARS-SSD-00710]** enter, modify, or delete a primary or unique auxiliary general information message at all TCP's in the same terminal area.

TCP input **shall[STARS-SSD-00711]** enable/disable display of the primary or unique auxiliary general information message.

TCP input **shall[STARS-SSD-00712]** terminate the blinking of the primary and auxiliary general information strings at the entering TCP.

3.2.1.1.10.8.8 Altitude Restriction

TCP input **shall[STARS-SSD-00713]** select, inhibit, and relocate altitude restriction information for display on specified TCPs.

TCP input **shall[STARS-SSD-00714]** allow entry of text which will display in the character size selected for list data.

3.2.1.1.10.8.9 Geographic Restriction

TCP input **shall[STARS-SSD-00715]** select, inhibit, and relocate geographic restriction information for special areas of activity for display on specified TCPs.

TCP input **shall[STARS-SSD-00716]** define at a specified location a circle or polygon with options to shade and include text.

For each TCP-entered altitude or geographic restriction, TCP input **shall[STARS-SSD-00717]** allow for the display, inhibit and modification of any parts of this data.

The system **shall[STARS-SSD-00718]** support multiple altitude and geographic restriction areas.

TCP input **shall[STARS-SSD-00719]** define a geographic restriction as a user-defined airspace with multiple line segments and the option to include text.

TCP input **shall[STARS-SSD-00720]** support the entry of an altitude or geographic restriction point using latitude and longitude or a corresponding adapted fix.

For each adapted geographic restriction, TCP input **shall[STARS-SSD-00721]** specify an adapted color for the figure and shading.

3.2.1.1.10.8.10 Emergency Information

TCP input **shall[STARS-SSD-00722]** select/inhibit the display of emergency information, per adaptation, for a selected aircraft or the nearest airport to a selected geographic location that is capable of handling aircraft of a designated size category.

The size category designations **shall[STARS-SSD-00723]** include the following:

Helicopters	0
Small aircraft	1
Medium aircraft	2
Large aircraft	3
Jumbo Aircraft	4

3.2.1.1.10.8.11 Hospital Information Display

TCP input **shall[STARS-SSD-00724]** select, inhibit and relocate the tabular list of hospital information, per adaptation.

3.2.1.1.10.8.12 Hospital Location

TCP input **shall[STARS-SSD-00725]** display a blinking square to indicate a hospital's geographic location for an adapted interval, as well as the hospital name if adapted.

3.2.1.1.10.8.13 Beacon Code Readout

3.2.1.1.10.8.13.1 Single Track

TCP input **shall[STARS-SSD-00726]** select/inhibit the display of the beacon code of a single track.

TCP input that selects an unassociated track **shall[STARS-SSD-00727]** cause a beacon code readout in the limited data block for an adaptable period of time.

TCP input that selects an associated track **shall[STARS-SSD-00728]** display the ACID along with the reported and assigned beacon code, as well as target address and identification if available, in the readout area.

3.2.1.1.10.8.13.2 All Tracks – TCP Display

TCP input **shall[STARS-SSD-00729]** select/inhibit the display of the beacon code of all unassociated tracks on the entering TCP.

3.2.1.1.10.8.13.3 Adapted Beacon Code Banks

TCP input **shall[STARS-SSD-00730]** select/inhibit the display of the beacon code of tracks using beacon codes within adapted beacon code banks

3.2.1.1.10.8.13.4 Selected Beacon Readout Display

TCP input **shall[STARS-SSD-00731]** select the display of a discrete beacon code of tracks with that code for an adaptable period of time.

3.2.1.1.10.8.14 PARROT, PE, RTQC, Test Targets, and Reference Transmitter

TCP input **shall[STARS-SSD-00732]** select/inhibit the display of Position Adjustable Radar Range Orientation Transponder (PARROTs), permanent echoes, beacon & search RTQC targets, surveillance systems search test targets, and reference transmitters on the entering TCP.

3.2.1.1.10.8.15 TCP Quicklook and Quicklook Plus

TCP input for Quicklook or Quicklook plus **shall[STARS-SSD-00733]** select or inhibit the simultaneous viewing of full data blocks on the entering TCP for a single track(Quicklook), or for the tracks owned by one or more active TCPs(both).

TCP input **shall[STARS-SSD-00734]** cause the current TCP Quicklook and Quicklook plus selections to be displayed in the readout area.

3.2.1.1.10.8.16 Filters

3.2.1.1.10.8.16.1 Altitude Filter

TCP input **shall[STARS-SSD-00735]** select/inhibit the filtering of the display of the data blocks for associated or unassociated aircraft based on TCP entered altitudes.

3.2.1.1.10.8.16.3 Beacon Code Filter-Unassociated

TCP input **shall[STARS-SSD-00736]** select/inhibit the display of special data block symbology for unassociated aircraft transmitting codes within a number of selectable beacon code blocks or discrete beacon codes.

3.2.1.1.10.8.16.4 Display Filter Settings

TCP input **shall[STARS-SSD-00737]** select/inhibit the display of all filter settings or display the current altitude filter setting in the readout area.

3.2.1.1.10.8.16.5 Regional Quicklook Filter

TCP input **shall[STARS-SSD-00738]** select/inhibit regional Quicklook filters from an adapted set of filters that force display of full data blocks for associated aircraft within the filter bounds or display the current regional Quicklook filter in the readout area.

3.2.1.1.10.8.16.6 Flight-Data Auto-Modify Filter

TCP input **shall[STARS-SSD-00739]** enable/disable flight-data auto-modify filters from an adapted set of filters that selectively modify flight data and leader line direction based on a set of parameters and display an informational system message at the MCP.

TCP input **shall[STARS-SSD-00740]** cause the currently enabled flight-data auto-modify filters to be displayed in the readout area.

3.2.1.1.10.8.16.7 Airspace Violation (ASV) Processing

TCP input **shall[STARS-SSD-00741]** enable/disable ASV processing system-wide or at the entering position for a selected airport and selected flight status and display an informational system message at the MCP.

TCP input **shall[STARS-SSD-00742]** enable/disable system-wide ASV processing for a selected associated track or ASV processing at the entering position and display an informational system message at the MCP.

TCP input **shall[STARS-SSD-00743]** display the current ASV status, system-wide or locally, in the readout area.

3.2.1.1.10.8.16.8 Altitude Filter Override Volume

TCP input **shall[STARS-SSD-00744]** enable/inhibit Altitude Filter Override Volume(s) at the entering display.

3.2.1.1.10.8.17 Select Mode 2
TCP input **shall[STARS-SSD-00745]** select/inhibit the display of the reported Mode 2 code of all tracks on entering TCP.

3.2.1.1.10.8.18 Hold
TCP input **shall[STARS-SSD-00746]** place an aircraft in hold until released by another TCP input.

When a flight plan that has disassociated from its track is placed in hold, an unsupported data block **shall[STARS-SSD-00747]** be created at the location at which the disassociation occurred.

3.2.1.1.10.8.19 Coordination Information
Coordination Information is a means of "silent" non-voice communication between two terminal controller positions. The tower controller can manipulate the list of departing aircraft on the TRACON controller's display to show departure ordering, aircraft ID and other information. An aircraft is removed from the coordination list at both the sending and receiving TCP when the flight plan becomes active.

3.2.1.1.10.8.19.1 Coordination Messages
TCP input **shall[STARS-SSD-00748]** create coordination messages for flights by selecting at a minimum the ACID or beacon code.

3.2.1.1.10.8.19.2 Coordination Message Composition
Coordination messages **shall[STARS-SSD-00749]** have the option to incorporate selections from a TCP data list and a field for TCP entered data.

3.2.1.1.10.8.19.3 Coordination Message Editing
Displayed coordination information **shall[STARS-SSD-00750]** be edited by TCP input and made available for use in creating revised coordination messages.

3.2.1.1.10.8.19.4 Coordination Message - Send
The TCP input **shall[STARS-SSD-00751]** send a coordination message to a TCP based on aircraft flight information and an adapted TCP.

The receiving TCP **shall[STARS-SSD-00752]** display only those messages that have been sent, and in the same order as they appear in the list at the sending TCP.

TCP input at the sending TCP **shall[STARS-SSD-00753]** recall a coordination message based on aircraft flight information.

3.2.1.1.10.8.19.5 Coordination Message - Response
A coordination message from the sending TCP **shall[STARS-SSD-00754]** provide the options to order coordination information and require the receiving TCP to acknowledge the coordination message.

3.2.1.1.10.8.19.6 Message Acknowledge

TCP input at the receiving position **shall[STARS-SSD-00755]** acknowledge an unacknowledged coordination message or re-acknowledge a manually acknowledged coordination message.

For each coordination channel between a sending and receiving TCP, adaptation **shall[STARS-SSD-00756]** specify whether or not messages sent to the receiving TCP are eligible to be automatically acknowledged.

TCP input at a receiving position **shall[STARS-SSD-00757]** modify the adapted behavior of a specified coordination channel to either enable or disable automatic acknowledgement of messages sent to that TCP.

A manually acknowledged coordination message **shall[STARS-SSD-00758]** revert to the unacknowledged state based on adaptation and the elapsed time since acknowledgement.

3.2.1.1.10.8.20 Uncorrelated Search-Only Target Display Selection
TCP input **shall[STARS-SSD-00759]** select/inhibit the display of uncorrelated or mapped uncorrelated search-only targets and the selection of either will toggle the other off.

3.2.1.1.10.8.21 Display CA Suppression Zones
TCP input **shall[STARS-SSD-00760]** select/inhibit the display of current CA Suppression Zone status for a designated airport.

3.2.1.1.10.8.22 PRM Arrival Runway Assignment Message Generation
When PRM is adapted, STARS **shall[STARS-SSD-00761]** generate a message advising PRM positions of the newly-assigned arrival runway for an associated track initially or upon a change.

3.2.1.1.10.8.23 Control of Mode C Display
TCP input **shall[STARS-SSD-00762]** select/inhibit the display of Mode C altitude for a selected aircraft.

Pilot-reported altitude **shall[STARS-SSD-00763]** be cleared when display of Mode C altitude is enabled and Mode C altitude is stabilized.

3.2.1.1.10.8.24 Control of Text Lists

3.2.1.1.10.8.24.1 Control of Text Messages
TCP input **shall[STARS-SSD-00764]** allow the following modifications to text messages:

a. Enable/inhibit the display of the list of all text messages
b. enable display of the list of received text messages
c. enter a text message
d. select blinking for the display of the message
e. address the message to a set of TCP's
f. move the text message list
g. remove a text message from all displays.

3.2.1.1.10.8.24.2 Control of Workstation Notes

TCP input **shall[STARS-SSD-00765]** enter, move, enable, and inhibit display of workstation notes at each TCP.

3.2.1.1.10.8.25 Control of Automatic Runway Assignment
TCP input **shall[STARS-SSD-00766]** select/inhibit automatic runway assignment to a flight plan for each of up to two regions identified by flow direction.

3.2.1.1.10.8.26 Significant Point Information
TCP input **shall[STARS-SSD-00767]** select/inhibit the display of Significant Point information, per adaptation, for a selected geographic location.

3.2.1.1.10.8.27 Control of MOA (Military Operations Area) Display
TCP input **shall[STARS-SSD-00768]** select/inhibit display of the MOA status list at the entering TCP.

TCP input **shall[STARS-SSD-00769]** display the flight with the first, second or third longest standing assignment to an MOA.

TCP input **shall[STARS-SSD-00770]** remove any flight from assignment to a controller-specified MOA segment/level combination.

3.2.1.1.10.8.28 Display Military Alert Suppression Zones
TCP input **shall[STARS-SSD-00771]** select/inhibit the display of a list of MASZ.

3.2.1.1.10.8.29 Highlight Track
TCP input using the middle mouse button to select a data block **shall[STARS-SSD-00772]** toggle the track in or out of the Highlight State.

All data block types **shall[STARS-SSD-00773]** be capable of being displayed in a Highlight State, regardless of ownership.

TCP input to place a track in a Highlight or Pointout State **shall[STARS-SSD-00774]** always allow Pointout to override a Highlight State.

3.2.1.1.10.8.30 Remove Data Block Color of Previously Owned Track
TCP input **shall[STARS-SSD-00775]** remove the Data Block Owned/Previously Owned Color or Blink Color when the entering TCP is the previous owner, leaving the full data block in the unowned color.

3.2.1.1.10.8.31 Removal of ADS-B/Non ADS-B Indicator
TCP input at the position that either owns or does not own the track **shall[STARS-SSD-00776]** remove the "ADB" indicator from the track's data block at all positions or only the entering position respectively.

3.2.1.1.10.8.32 Pointout Accept History

When the Pointout Accept History Function is enabled in site adaptation, TCP input **shall[STARS-SSD-00777]** be capable of the following:

a. Clear the pointout accept history and count for a track
b. Request display of the pointout accept history for an associated track in the readout area
c. Inhibit the display of the pointout accept count in the FDB of all tracks
d. Enable the display of the pointout accept count in the FDB of owned tracks
e. Enable the display of the pointout accept count in the FDB of all tracks

Site adaptation **shall[STARS-SSD-00778]** specify per TCP how the pointout accept count is displayed.

3.2.1.1.10.8.33 Satellite Arrival List

TCP input **shall[STARS-SSD-00779]** select/inhibit the display of the Satellite Arrival List.

Adaptation **shall[STARS-SSD-00780]** specify the minimum and maximum range from the airport and the altitude ceiling for tracks which will be displayed in the Satellite Arrival List.

3.2.1.1.10.9 Control of TCP Information

3.2.1.1.10.9.1 System Data

TCP input **shall[STARS-SSD-00781]** select/inhibit the display of any non-mandatory information in the system data area individually or simultaneously.

3.2.1.1.10.9.2 Operator Sign-on/Sign-off

TCP input **shall[STARS-SSD-00782]** include a sign-on and off entry to document each operator at a TCP.

User sign-on or off **shall[STARS-SSD-00783]** leave the TCP settings and preference set selection unchanged with the exception, all weather levels are selected, per adaptation, when either no current user was signed on or your sign on replaces the only other user at that position.

The TCP sign–on entry **shall[STARS-SSD-00784]** accept a user name of 2 to 8 characters and an optional developmental's user name.

The TCP sign–on or off entry **shall[STARS-SSD-00785]** accept an optional time of day parameter that will override the current time.

When a user signs on, if that user is already signed on at another position, a message **shall[STARS-SSD-00786]** be displayed in the readout area of the entering TCP indicating the other physical position(s) where the user is currently signed on.

When an optional developmental user name is supplied as part of the sign-on, the input **shall[STARS-SSD-00787]** accept a character identifying the developmental relationship from among the following:

/ = instructor

. = evaluator
* = certifier
+ = familiarization session

When the Identification and Authentication security service is not active, the TCP operator sign-on entry **shall[STARS-SSD-00788]** accept an optional parameter designating a physical keyboard.

The TCP operator sign-on entry **shall[STARS-SSD-00789]** accept an optional parameter designating a non-interactive position.

The system **shall[STARS-SSD-00790]** report TCP sign-on and off information in text form in accordance with the NAS-IC-21050001-01 STARS GeNUS ICD.

3.2.1.1.10.9.3 Training Mode
TCP input **shall[STARS-SSD-00791]** enable/disable training mode for a specified TCP.

3.2.1.1.10.9.4 Brightness Control
TCP input **shall[STARS-SSD-00792]** select brightness intensity individually for the different types of text and graphics presented on a TCP.

3.2.1.1.10.9.5 Data Lists

3.2.1.1.10.9.5.1 Relocate
TCP input **shall[STARS-SSD-00793]** reposition data lists to any location on the TCP display.

3.2.1.1.10.9.5.2 Access to Data
When information is not displayed due to insufficient space in a list, a method of access to this information **shall[STARS-SSD-00794]** be available at the TCP.

3.2.1.1.10.9.5.3 Time Out Warning List Control
TCP input **shall[STARS-SSD-00795]** modify the interval used to determine which flight plans are to be included in the Time Out Warning list.

TCP input **shall[STARS-SSD-00796]** inhibit an individual flight from display in the Time Out Warning list and subsequent change to proposed departure time will remove the inhibition.

3.2.1.1.10.9.6 Display Maps
TCP input **shall[STARS-SSD-00797]** activate/deactivate the simultaneous combination or individual display of TCP maps as constrained by the geographic map capacities.

3.2.1.1.10.9.7 Pointer Initial Position Activation
TCP input **shall[STARS-SSD-00798]** enable/disable the pointer device icon to return or not return to the initial pointer position after an entry.

3.2.1.1.10.9.8 Pointer Initial Position Selection
TCP input **shall[STARS-SSD-00799]** select an initial position where the pointer device icon appears.

3.2.1.1.10.9.9 Range Rings
TCP input **shall[STARS-SSD-00800]** select/inhibit the display and intervals of range rings.

3.2.1.1.10.9.11 Display Range
TCP input **shall[STARS-SSD-00801]** select a display range without modifying the character size and line width.

3.2.1.1.10.9.12 Display Presentation View
TCP input **shall[STARS-SSD-00802]** select the radar display presentation view.

3.2.1.1.10.9.13 Leader Direction Control

3.2.1.1.10.9.13.1 Automatic Offset - Single Aircraft
Per site adaptation, an aircraft displaying a CA/MCI or LA condition **shall[STARS-SSD-00803]** be subject to automatic offset of overlapping data blocks independent of whether TCP input has disabled automatic offset of overlapping data blocks.

3.2.1.1.10.9.13.2 Automatic Offset – TCP Display
TCP input **shall[STARS-SSD-00804]** enable/disable the automatic offset of overlapping data blocks at the entering TCP.

Adaptation **shall[STARS-SSD-00805]** specify if automatic offset will use only leader line orientation changes, or a combination of leader line length and orientation changes.

3.2.1.1.10.9.13.3 Offset Data Block Type
A Display Control Panel (DCP) knob, if available, **shall[STARS-SSD-00806]** modify the default offset for tracks owned by the main keyboard of the TCP.

TCP input **shall[STARS-SSD-00807]** establish a default leader and data block offset for tracks at this TCP.

3.2.1.1.10.9.13.4 Offset Single Data Block
TCP input **shall[STARS-SSD-00808]** apply or revoke offset of the data block of a single track only at this TCP or all TCP's with a full data block for that track.

3.2.1.1.10.9.13.5 Leader Offset Priorities
Leader direction priority **shall[STARS-SSD-00809]** be applied in the following order:

a. Automatically positioned during alert conditions
b. Local manually assigned single track leader direction
c. Adapted leader direction from filter adaptation
d. Global manually assigned single track leader direction
e. Leader direction derived from the Data Block Offset Direction Rules adaptation

f. Leader direction from the display of the track owner for FDBs not owned by this TCP
g. Leader direction for unassociated tracks
h. Leader direction for tracks owned by this TCP
i. Manually assigned leader direction for tracks owned by specified TCPs
j. Leader Direction for tracks unowned by this TCP

3.2.1.1.10.9.13.6 Leader Offset Directions
The applied leader and data block offset **shall[STARS-SSD-00810]** be from one of the following directions, North; Northwest; West; Southwest; South; Southeast; East or Northeast.

3.2.1.1.10.9.13.7 Control of Adaptable Leader Offset
TCP input **shall[STARS-SSD-00811]** enable/inhibit an adapted condition controlling data block leader direction.

3.2.1.1.10.9.14 Preference Sets

3.2.1.1.10.9.14.1 Multiple Preference Sets
TCP input **shall[STARS-SSD-00812]** establish, modify and store multiple preference sets, that control selectable display features, for each ATC operator.

TCP input to establish, delete and store preference sets **shall[STARS-SSD-00813]** require the entry of a controller Personal Identification Number (PIN).

A preference set entry requiring a PIN **shall[STARS-SSD-00814]** display an "*" in the preview area for each entered PIN character.

3.2.1.1.10.9.14.2 Activate ATC Operator Preferences
An ATC operator preference set **shall[STARS-SSD-00815]** be saved and or activated via a specific TCP entry.

3.2.1.1.10.9.14.3 Adaptable and Applicable Preferences
Based on adaptation and display setup the applied preference set **shall[STARS-SSD-00816]** capture predefined display setting adjustments for future retrieval.

3.2.1.1.10.9.14.6 Default Preference Sets
Each TCP **shall[STARS-SSD-00817]** have, at startup, a default preference set in normal operation mode and for each AMZ in FMA mode.

3.2.1.1.10.9.15 Parallel Approach Monitor (PAM) Display View
In single sensor slant position or fused-track display view, TCP input **shall[STARS-SSD-00818]** respectively based on adaptation or always, select/deselect PAM display view.

3.2.1.1.10.9.16 Cursor Dwell / Multi Track Activation
Site adaptation **shall[STARS-SSD-00819]** specify if either the Cursor Dwell functionality or the Multi Track functionality is enabled system-wide at initialization.

TCP input **shall[STARS-SSD-00820]** enable/disable the Cursor Dwell functionality per TCP while simultaneously disabling/enabling Multi Track functionality.

3.2.1.1.10.10 Control of System Wide Data

3.2.1.1.10.10.1 Altimeter
Per adaptation, altimeter settings in millibars or hundredths of inches of mercury **shall[STARS-SSD-00821]** be accepted.

TCP input **shall[STARS-SSD-00822]** set the altimeter method of entry to automatic or manual for any reporting station adapted to the TCP and if the latter allow modification.

3.2.1.1.10.10.2 ATIS
TCP input **shall[STARS-SSD-00823]** modify the ATIS for specified airports and adapted terminal areas.

3.2.1.1.10.10.3 Interfacility Message Printout
MCP input **shall[STARS-SSD-00824]** enable/disable the printout of all interfacility messages or selected message types as specified by the TCP.

3.2.1.1.10.10.4 Automatic Handoff Processing - Entire System
TCP input **shall[STARS-SSD-00825]** enable/disable automatic handoff processing for the entire TAS.

3.2.1.1.10.10.5 IFDT - Entire System
If an IFDT interface is adapted, TCP input **shall[STARS-SSD-00826]** allow for the ARTCC to be configured in FDP or RDP mode, enable a specific ARTCC with or without the deletion of inactive flight plans and disable an ARTCC.

3.2.1.1.10.10.6 System Control of Safety Functions

3.2.1.1.10.10.6.1 Safety Function Processing - Entire System
TCP input **shall[STARS-SSD-00827]** enable/disable CA, MCI or MSAW processing for the entire TAS.

3.2.1.1.10.10.6.2 CA/MCI Processing - Adaptation
TCP input **shall[STARS-SSD-00828]** enable/disable adapted areas defined by altitude and geographic parameters from CA/MCI processing.

3.2.1.1.10.10.6.3 CRDA Processing - Entire System
TCP input **shall[STARS-SSD-00829]** enable/disable CRDA processing for the entire TAS, a single terminal area, as well as, select tie or stagger modes of operation.

3.2.1.1.10.10.6.5 MSAW Approach Monitor
TCP input **shall[STARS-SSD-00830]** enable/disable MSAW approach monitoring processing for the entire TAS.

3.2.1.1.10.10.6.6 Military Alert Suppression Zones
TCP input **shall[STARS-SSD-00831]** enable/disable individual adapted MASZ for the entire TAS.

3.2.1.1.10.10.7 System Time and Date
MCP input **shall[STARS-SSD-00832]** be able to select the independent time source or manually enter the system time or date and override the information from the external source.

3.2.1.1.10.10.10 TFMS Message Transmission Over the IFDT Interface
If an IFDT interface is adapted, TCP input **shall[STARS-SSD-00833]** enable/disable transmission of TFMS information, TZ messages, over the interface when the Traffic Management Unit (TMU) is not adapted.

3.2.1.1.10.10.11 Instrument Operations Counting
TCP input **shall[STARS-SSD-00834]** enable/disable the declaration of Instrument Operations conditions for designated airports from among the set of airports for which traffic statistics are collected.

3.2.1.1.10.10.12 Control of RNAV Status Delete Regions
TCP input **shall[STARS-SSD-00835]** enable/disable an RNAV Status Delete Region for the entire TAS.

3.2.1.1.10.10.13 Sensor Failure
TCP input **shall[STARS-SSD-00836]** enable/disable the state of an operator declared sensor failure.

If a radar is in a failure state, TCP input **shall[STARS-SSD-00837]** enable/disable RTQC status monitor processing for that radar.

When a radar transitions from a declared failure state to the normal state, RTQC status monitor processing **shall[STARS-SSD-00838]** be automatically enabled.

3.2.1.1.10.10.14 Flight Plan Flush
TCP input **shall[STARS-SSD-00839]** display the value of or modify flight plan flush time.

3.2.1.1.10.11 Controller Position Configuration

3.2.1.1.10.11.1 Configuration Command Entries
The TCP **shall[STARS-SSD-00840]** accept and process all Controller Position Configuration entries.

3.2.1.1.10.11.2 Multiple Positions
Each TCW and TDW **shall[STARS-SSD-00841]** support three unique TCP's each having their own pointer and data input areas on the display. STARS G1/G2 hardware is only required to support two TCP's per TDW.

3.2.1.1.10.11.3 Consolidation of TCPs

TCP input **shall[STARS-SSD-00842]** provide for the following consolidation entries, with Table 3.2.1.1.10-1 providing examples:

a. Basic
b. Full
c. Limited
d. Designate a Basic or Full consolidated TCP a Limited
e. Consolidate all, excludes all tower TCP's
f. Deconsolidate

When consolidating, and the sending position is currently a secondary, if the receiving TCP has airspace or not, the sending position **shall[STARS-SSD-00843]** become consolidated at the receiving TCP as the secondary or primary position respectively, as long as neither the receiving nor the sending positions are in a limited or basic consolidation.

TCP input **shall[STARS-SSD-00844]** activate a printout of all TCP configurations, initiate a readout of the current TCP consolidations or all keyboard pairings for the Terminal Sector adapted to the entering TCP.

Table 3.2.1.1.10-1 Example with 1N as the sending position and 1F as the receiving TCP

	Initial Start	Consolidate 1N to TCP 1F with airspace	De-Consolidate 1N to TCP 1F without airspace
Previous Full Consolidation	1D CON: 1D 1N	1D CON: 1D 1F CON: 1F 1N	1D CON: 1D 1F CON: 1N
Previous Basic Consolidation	1D CON: 1D 1N 1F CON: *1N	disallowed	disallowed
Previous Limited Consolidation	1D CON: 1D 1N 1F CON: /1N	disallowed	disallowed

3.2.1.1.10.11.4 Additional Input Devices Associated with TCPs

The coupling requirement does not move the preview and cursor associated with a keyboard to a second display. The cursor and preview remains on the display that is physically connected to the keyboard. This function simply allows a logic override for the coupled position.

TCP input **shall[STARS-SSD-00845]** permit the input device to be coupled with or de-coupled from other TCP(s).

3.2.1.1.10.11.5 Sectorization

3.2.1.1.10.11.5.1 Resectorization

TCP input **shall[STARS-SSD-00846]** select a configuration plan and optional Terminal Sector identifier to activate resectorization with the option of including or excluding tower TCPs.

3.2.1.1.10.11.5.2 Partial Resectorization
TCP input **shall[STARS-SSD-00847]** activate partial resectorization for specified fixes and specified TCPs.

TCP input **shall[STARS-SSD-00848]** assign to the specified TCP an adapted group of fix pairs per terminal area designated by a single letter.

3.2.1.1.10.11.5.3 Sectorization Printout
TCP input **shall[STARS-SSD-00849]** activate a printout of the TCP configuration detailing all TCP associations to entry and exit fixes from a TCP.

3.2.1.1.10.11.6 Training Mode - TCW and TDW
TCP input **shall[STARS-SSD-00850]** place any TCP into training mode.

TCP input **shall[STARS-SSD-00851]** provide control of simulated targets for test and training purposes.

3.2.1.1.10.12 Cursor Position Readout
TCP input **shall[STARS-SSD-00852]** cause the geographic position of the current cursor location to be displayed in the readout area as latitude/longitude coordinates.

3.2.1.1.11 TCP Data Display

3.2.1.1.11.1 Available Service Levels Indicated
The service levels available to be displayed at any TCP **shall[STARS-SSD-00853]** be indicated on the corresponding TCW/TDW.

3.2.1.1.11.2 Controller Position Display Presentation
All display presentation functions **shall[STARS-SSD-00854]** be available at all TCPs.

3.2.1.1.11.3 Data Block Transformations

3.2.1.1.11.3.1 Airspace Regions
The data block **shall[STARS-SSD-00855]** indicate when an aircraft enters an adapted three dimensional partial filter region and data field values match values specified in adaptation.

The system **shall[STARS-SSD-00856]** use the manually-entered pilot-reported altitude or an adapted parameter to determine whether the aircraft satisfies the altitude criteria for inclusion in the airspace region.

The data block **shall[STARS-SSD-00857]** display as a full data block when an aircraft is within the filter bounds of an active regional Quicklook filter and the adapted conditions are satisfied.

If the track does not have a valid altitude then its eligibility for a regional Quicklook filter **shall[STARS-SSD-00858]** be based on its assigned altitude if available.

An aircraft that is within the filter bounds of an enabled flight-data auto-modify filter **shall[STARS-SSD-00859]** qualify for the filter if all of the adapted conditions are satisfied.

Adaptation data **shall[STARS-SSD-00860]** specify what actions are to be carried out for an active flight plan and recorded as automatic functions in CDR when it first qualifies or when it exits the filter bounds for an enabled flight-data auto-modify filter.

Per adaptation, each flight-data auto-modify filter **shall[STARS-SSD-00861]** be automatically enabled or disabled on startup.

Adaptation **shall[STARS-SSD-00862]** specify whether a TCP sounds a Wrong Airport aural alarm when a track enters a partial filter.

3.2.1.1.11.3.2 Filters

The data block **shall[STARS-SSD-00863]** uniquely indicate when aircraft are within active filter bounds.

A data block **shall[STARS-SSD-00864]** display altitude for mode-C tracks regardless of filter settings when the track is within adapted Altitude Filter Override Volume(s).

Multiple Altitude Filter Override Volumes **shall[STARS-SSD-00865]** be adaptable and automatically selected per configuration plan for the Terminal Sector .

3.2.1.1.11.3.3 Beacon Mismatch

The data block **shall[STARS-SSD-00866]** uniquely indicate when there is a mismatch between the assigned and reported beacon code and indicate the assigned beacon code.

3.2.1.1.11.3.4 Track - Blind Area

The data block **shall[STARS-SSD-00867]** uniquely indicate when a track is not receiving surveillance updates and remain at the last displayed position when in an adaptable radar/beacon blind area or geographic freeze region and when the track's owning TCP is not adapted to be exempt from area freeze.

The system **shall[STARS-SSD-00868]** provide multiple adapted freeze regions per terminal area.

When no valid track altitude exists, an adaptable parameter or pilot reported altitude **shall[STARS-SSD-00869]** be used to determine whether the aircraft satisfies the altitude criteria for inclusion in the geographic freeze region.

3.2.1.1.11.3.5 Departure Message Error

The data block **shall[STARS-SSD-00870]** indicate when a departure message failure occurs, an acknowledgment is not received or manual association indicates the need for manual coordination.

3.2.1.1.11.3.6 Standard Transponder Indicators

The data block **shall STARS-SSD-00871]** uniquely indicate when an aircraft transponder is indicating either an emergency(EM 7700), radio failure(RF 7600), hijack(HJ 7500), or lost link (LL 7400) condition (Alert SPC).

When a transponder from a suspended aircraft is indicating an Alert SPC, the track **shall[STARS-SSD-00872]** be unsuspended automatically.

Until acknowledged by controller input, the Alert SPC track **shall[STARS-SSD-00873]** be displayed blinking in line 0 of the data block in the Alert color, once acknowledged or if the condition is entered by controller it will not blink.

Until acknowledged by controller input, adapted special condition code indicators **shall[STARS-SSD-00874]** be displayed blinking in line 0 of the data block in the unacknowledged Caution color, once acknowledged it will stop blinking but remain as long as it is squawking the corresponding beacon code.

If different sensors report different special condition codes for the same aircraft, then the order of precedence for display **shall[STARS-SSD-00875]** be as follows:

a. the code reported by one or more radars, or by the multilateration sensor
b. the code reported by ADS-B 1090ES
c. the code reported by ADS-B UAT.

When a track laterally coasts out while displaying any Alert SPC code, and is not in a filter adapted to inhibit freezing of tracks in special code alert, the track **shall[STARS-SSD-00876]** freeze at the last displayed position with the code displayed until either the track is manually terminated or target reports are received that cause the track to unfreeze, and the aircraft transponder is no longer squawking a special code, and the flight does not have a controller-entered special code.

Adapted special condition code indicators **shall[STARS-SSD-00877]** be displayed non-blinking in the data block in the Caution color when an indicator is entered by controller input and the following is true:

a. The track is not already transponding a special beacon code
b. The track is associated and either the track is displaying an FDB prior to the alert or the code is adapted to display alerts on a PDB.

3.2.1.1.11.3.7 Transponder Aural Alarm

The TCW/TDW aural alarm **shall[STARS-SSD-00878]** sound when any of the following occurs:

a. A full data block for an Alert SPC track owned by or adapted to ring for this TCP
b. An unassociated track with a blinking alarm beacon code has not been globally or locally acknowledged at this TCP
c. A full data block for an Alert SPC track is the previous owner and this TCP is adapted to ring for previous owner.

3.2.1.1.11.3.8 Adapted Values

Geographic or data field values that correspond to adapted values **shall[STARS-SSD-00879]** force the display of either other data fields in data blocks or an adapted data block type to adapted TCP(s).

3.2.1.1.11.3.10 Flight-Plan Acquisition Failure

A departure aircraft data block **shall[STARS-SSD-00880]** indicate when it fails to automatically acquire in an adaptable departure area.

For each departure area and no-flight-plan alert region, adaptation data **shall[STARS-SSD-00881]** define the set of TCPs that the automatic acquisition failure indications are displayed, and optionally, an airport associated with the area.

For an airport that is associated with an adaptable departure area or no-flight-plan alert region, adaptation data **shall[STARS-SSD-00882]** define a list of discrete Mode 3/A codes for which the automatic acquisition failure indication will not be displayed, and a list of non-discrete Mode 3/A codes for which the indication will be displayed.

TCP input **shall[STARS-SSD-00883]** enable/inhibit the display of automatic acquisition failure indications system-wide for all tracks departing from the specified departure area, entering the specified no-flight-plan alert region, or inhibit display for a single track at the entering TCP.

The data block **shall[STARS-SSD-00884]** indicate when an aircraft that is eligible to display the automatic acquisition failure indication enters an adapted three dimensional no-flight-plan alert region, and either has no flight plan or is adapted to not check for a flight plan.

3.2.1.1.11.3.11 Handoff

Automatic handoff **shall[STARS-SSD-00885]** be inhibited when track position and adaptation parameters are satisfied.

The data block **shall[STARS-SSD-00886]** have an indication when any of the following occur:

a. An Interfacility handoff is received but target does not satisfy an adapted distance
b. Aircraft in handoff until an adapted time after the handoff is accepted
c. An Interfacility handoff has been cancelled by the receiving facility (ARTCC only)
d. An Interfacility handoff is not being updated either by surveillance data or TU messages
e. An intrafacility transfer of a track that was previously handed off to an external facility will indicate the receiving position and then revert to the external facility.

When a handoff is initiated, the sending or receiving TCP **shall[STARS-SSD-00887]** display the receiving TCP symbol, and the aircraft's slot marker if available, until the handoff is accepted or recalled.

When adapted a redirected inter or intrafacility handoff **shall[STARS-SSD-00888]** display "RD", for an adaptable period, in the FDB of the handoff initiator (if applicable), the redirection initiator, and the handoff receiver.

3.2.1.1.11.3.12 Unreasonable or Negative Altitude

The data block **shall[STARS-SSD-00889]** indicate when an unreasonable Mode C or negative altitude is received for an aircraft.

3.2.1.1.11.3.14 Out of Sensor Coverage

The data block **shall[STARS-SSD-00890]** uniquely indicate when an aircraft leaves the adapted sensor coverage area, but is still under the control of a TCP.

3.2.1.1.11.3.15 Pointout

When pointout is initiated, the initiating and receiving TCPs **shall[STARS-SSD-00891]** display an attention getting attribute, such as "PO", in the data block.

The initiating TCP for an inter or intrafacility pointout **shall[STARS-SSD-00892]** indicate in the data block whether the pointout has been accepted or rejected.

When pointout is accepted or rejected, the receiving TCP data block **shall[STARS-SSD-00893]** be, a full data block displayed in the pointout accepted state or returned to a state having no indication of a pointout, respectively.

When an intrafacility pointout handoff is accepted, the initiating TCP data block **shall[STARS-SSD-00894]** display the same indication as a normal intrafacility handoff accept.

A full data block in the pointout accepted state **shall[STARS-SSD-00895]** be displayed in the Pointout Accepted or Attention color based respectively on non-blinking or blinking fields.

A data block displayed in the pointout accepted state **shall[STARS-SSD-00896]** no longer appear in that state when handoff is initiated or ownership is changed to that TCP.

When the Pointout Accept History Function is enabled, a count of TCPs in the pointout accept history **shall[STARS-SSD-00897]** be displayed based on adaptation.

3.2.1.1.11.3.16 Update Position Data

The data block **shall[STARS-SSD-00898]** indicate when an aircraft's position is being updated from interfacility message data or only search radar returns.

3.2.1.1.11.3.18 Scratch Pad Display

The scratch pad data fields **shall[STARS-SSD-00899]** provide predefined information based on flight status, fix information, geographic area and adaptation.

When TCP entry is made to delete scratch pad data it **shall[STARS-SSD-00900]** be removed regardless of how it was placed there.

When a TCP or automation system entry is made to either of a track's scratch pad fields, and that data does not match the current respective scratch pad, then the current data will be saved, and the track's scratch pad **shall[STARS-SSD-00901]** be updated with the new data.

When a TCP entry is made to either of a track's scratch pad fields that match the current field, the entry will be discarded and the track's scratch pad **shall[STARS-SSD-00902]** be updated with the previously saved scratch pad data.

TCP input **shall[STARS-SSD-00903]** specify the default Automatic Scratchpad text for an adapted Scratchpad Group or set of scratchpad criteria.

When TCP input has updated the default Automatic Scratchpad text for a Scratchpad Group, the scratchpad **shall[STARS-SSD-00904]** be updated with the new text in each inactive flight plan that matches adaptation criterea unless the scratchpad was previously entered by TCP command.

3.2.1.1.11.3.19 Hold-Last Position

The data block **shall[STARS-SSD-00905]** remain in the last displayed position when an aircraft in hold or handoff has not received a surveillance report update for an adapted time or exits the adapted geographic area for the selected sensor.

The data block **shall[STARS-SSD-00906]** remain in the last displayed position when an aircraft in FMA Surveillance alert condition has not received a surveillance report update for an adapted time.

3.2.1.1.11.3.20 Track Non-Correlation

The data block **shall[STARS-SSD-00907]** indicate when a track has not correlated based on adaptation.

3.2.1.1.11.3.21 Suspended Track

For those positions that are displaying a suspended track, the target **shall[STARS-SSD-00908]** have the owner's assigned list line number, if any, adjacent to the track position symbol.

Upon TCP entry identifying a suspended flight plan associated to an active track, the current altitude information **shall[STARS-SSD-00909]** be displayed in the suspended tracks data block, next to the list line number and or the Readout Area.

3.2.1.1.11.3.22 Flight Plan from Adjacent TRACON

The data block **shall[STARS-SSD-00910]** indicate when a flight has flight plan data received from an adjacent TRACON.

3.2.1.1.11.3.23 Track Transponding Adapted Beacon Code

The data block of an unassociated track transponding an adapted beacon code **shall[STARS-SSD-00911]** display and blink the ACID adapted for that beacon code.

3.2.1.1.11.3.24 Track Ownership

The full data block of a track, excluding line 0, **shall[STARS-SSD-00912]** be displayed at the owning TCP with all fields not blinking displayed in the Data Block Owned color, and all blinking fields in the Data Block Owned - Blink color.

The data block of a track, excluding line 0, **shall[STARS-SSD-00913]** be displayed at the non-owning TCP with all fields not blinking displayed in the Data Block color, and all blinking fields displayed in the Data Block - Blink color.

When an external facility accepts a handoff from STARS and then hands off the track to a position other than the previous owner, the track's data block color **shall[STARS-SSD-00914]** remain unchanged at the previous owner's position.

3.2.1.1.11.3.25 RNAV Status Indicator Display

The datablock **shall[STARS-SSD-00915]** indicate a flight on an RNAV route.

A flight **shall[STARS-SSD-00916]** be assigned a RNAV status indicator when its fix pair matches an RNAV route in adaptation, excluding VFR interfacility flight data entry, or a manual assignment of an RNAV status indicator.

A flight's RNAV Status Indicator **shall[STARS-SSD-00917]** be cleared upon TCP entry to remove status, modify fix pair to non-RNAV fix pair prior to the STARS system controlling the flight or the flight enters an RNAV Status Delete Region.

An RNAV Status Delete Region **shall[STARS-SSD-00918]** remove RNAV status from a flight when enabled and adaption matches flights conditions.

3.2.1.1.11.3.26 Cursor Dwell

When the Cursor Dwell Functionality is enabled at a TCP, and the pointer device is slewed within a site adaptable dwell distance and time for an associated or unassociated data block, the track and associated ATPA and/or TSAS data **shall[STARS-SSD-00919]** be placed in a Dwell State where every displayable portion of the data block is shown at 100% brightness until the cursor is no longer within the dwell distance from the track.

When the Cursor Dwell is attempted and there are multiple tracks within that dwell distance from the cursor, the track closest to the cursor **shall[STARS-SSD-00920]** be placed in a Dwell state.

If the closest tracks are the same distance from the cursor, no track **shall[STARS-SSD-00921]** be placed in a Dwell State.

All data block types **shall[STARS-SSD-00922]** be capable of being displayed in a Dwell State, regardless of ownership.

If adapted and the radius of a TPA J-Ring or TPA/ATPA Cone is inhibited, the radius **shall[STARS-SSD-00923]** be displayed while the track is in the Dwell state.

When the Cursor Dwell Functionality is enabled at the TCP, and the pointer device is slewed within a track's slot marker or over the information for a flight in any Timeline window, and the cursor remains in that position for a site adaptable dwell interval, the corresponding track **shall[STARS-SSD-00924]** be placed in a Dwell State as described above. Unless dwell lock is inhibited at the TCP, the track will remain in the Dwell State until the cursor is moved.

3.2.1.1.11.3.27 RVSM Ineligibility Display

When a flight is deemed ineligible for RVSM separation standards all altitude fields **shall[STARS-SSD-00925]** appear in the adapted RVSM Ineligible color.

3.2.1.1.11.3.28 Re-acquisition of Disassociated Flight Plan

A flight plan that was suspended due to beacon code mismatch, or an Initiate Transfer replacing the flight plan, **shall[STARS-SSD-00926]** be automatically unsuspended when it associates to a track.

To indicate the need for manual coordination, the data block **shall[STARS-SSD-00927]** indicate when a track has associated to a flight plan with departure status, and had previously disassociated due to a beacon code mismatch.

3.2.1.1.11.4 Data Fields

3.2.1.1.11.4.1 Data Fields - General

Data fields **shall[STARS-SSD-00928]** form data block types and data lists per adaptation.

The following data fields **shall[STARS-SSD-00929]**, based on adaptation, be available in either a data block or list:

a. Aircraft Type
b. Aircraft Identification (ACID)
c. Airport Identifier
d. Arrival Time
e. Controller Assigned, Requested or Entered Altitude
f. Assigned & Reported Beacon Code
g. Flight Plan Requested Altitude
h. Departure Time
i. TCP Indicator
j. Entry/Exit Fix
k. Flight Status
l. Ground Speed
m. Information Transfer Indicator
n. Data List Line Identifier
o. Corrected Mode C Altitude
p. Number of Aircraft in Formation
q. Pointout Indicator & Initiator
r. Reported Beacon Code
s. Safety Alerts
t. Scratch Pad
u. Special Designators & Equipment Indicator
v. Ident or Special Position Indicator
w. Track Update Status
x. Mode 2 Indication
y. RNAV Status Indicator

z. Arrival Airport Designator
aa. Duplicate ACID or Beacon Indicator
bb. No Flight Plan Indicator
cc. Duplicate Departure Flight Plan Indicator
dd. Duplicate Target Address Indicator

3.2.1.1.11.4.2 Aircraft Type

The Aircraft Type data field **shall[STARS-SSD-00930]** be timeshared in the data block and enabled based upon flight and handoff status.

Multiple Aircraft Type Display Suppression regions **shall[STARS-SSD-00931]** be adaptable within which the timeshare display of aircraft type is suppressed from the full data block based on flight and handoff status.

Base on adaptation an Aircraft Type Display Suppression region **shall[STARS-SSD-00932]** be geometrically designed with aircraft type enable and disable regions within the shape and capable of being adapted to a TCP.

If the display of aircraft type is forced, the aircraft type **shall[STARS-SSD-00933]** be displayed with priority in the full data block for the aircraft.

If the display of aircraft type is not forced, aircraft type **shall[STARS-SSD-00934]** be displayed as a time sharing field in the full data block based on adaptation, flight and handoff status of the displaying position.

3.2.1.1.11.4.10 Adapted Transponder Indicators

A data field **shall[STARS-SSD-00935]** define multiple transponder indicators that are based upon a corresponding set of adapted aircraft beacon codes.

3.2.1.1.11.4.16 Handoff Positions

An Interfacility handoff data field **shall[STARS-SSD-00936]** define the facility and position symbol of the handoff sender or receiver.

The handoff receiver data field **shall[STARS-SSD-00937]** identify the TCP for Intrafacility or external facility for Interfacility handoffs.

3.2.1.1.11.4.26 Safety Inhibits

Data fields **shall[STARS-SSD-00938]** define all safety alert inhibit indicators.

3.2.1.1.11.4.27 Scratch Pad

System or controller entered scratch pad data, primary or secondary **shall[STARS-SSD-00939]** consist of up to 4 characters.

When enabled by controller input, an initial runway assignment for an arrival flight plan **shall[STARS-SSD-00940]** be assigned automatically to one of the scratch pad fields based on various adaptation data.

When the secondary scratch pad is displayed, it **shall[STARS-SSD-00941]** be immediately followed by a "+" character to identify it.

Runway data supplied by TBFM **shall[STARS-SSD-00942]** be displayed in a flight's scratchpad when the flight is not owned by or in handoff to STARS and the relevant scratchpad for runway data does not match adaptation.

3.2.1.1.11.4.31 Track Update Status

Based on the surveillance systems updates and adaptation the Track Update Status data field **shall[STARS-SSD-00943]** display an indication like CST, NAT, ADB, ISR or TRK when tracks are coasting, out of sensor coverage areas or not updated with enough accuracy to support specific separation requirements.

3.2.1.1.11.4.33 Hold

A data field **shall[STARS-SSD-00944]** define an aircraft in hold.

3.2.1.1.11.4.34 Exit Gate

A data field **shall[STARS-SSD-00945]** define exit gate information comprising an adapted character representing exit fix and the two digits of requested altitude from flight plan information.

3.2.1.1.11.4.35 MOA Assignment

A data field **shall[STARS-SSD-00946]** define the current MOA assignment of an aircraft.

3.2.1.1.11.4.38 IFDT ID

A data field **shall[STARS-SSD-00947]** define the source interfacility ID of a flight plan - ECID for Host flight plans or TCID for Adjacent TRACON flight plans.

3.2.1.1.11.4.40 Target Identification

A data field **shall[STARS-SSD-00948]** define an adaptable target identification field.

3.2.1.1.11.4.42 ADS-B/Non ADS-B Indicator

A data field **shall[STARS-SSD-00949]** define an ADS-B/Non ADS-B indicator when enabled for display on FDBs or PDBs based on the following:

a. No indication when aircraft is ADS-B equipped and operational.
b. Hollow circle when aircraft is ADS-B equipped and has become non-operational.
c. Filled circle when aircraft is not ADS-B equipped.

3.2.1.1.11.4.43 ATPA Distance

A data field **shall[STARS-SSD-00950]** define the In-Trail Distance between an associated track and the closest associated track +/- 90° from the heading of the trailing track when both tracks are considered eligible for ATPA In-Trail Distance processing.

ATPA In-Trail Distance **shall[STARS-SSD-00951]** be displayed in either the ATPA Alert color, Caution color or data block color when the track is eligible to display an ATPA Alert Cone, Warning Cone or neither respectively.

3.2.1.1.11.4.44 ATPA Indicators

A data field **shall[STARS-SSD-00952]** define an indication that a weight class is unavailable for a track that qualifies for ATPA Cone processing when that TCP meets all the eligibility criteria.

3.2.1.1.11.4.46 Airport Range

A data field **shall[STARS-SSD-00953]** define the range and magnetic bearing from the exit fix of an associated track to the smoothed track position.

3.2.1.1.11.4.47 ACID/Target ID Mismatch Indicator

A data field **shall[STARS-SSD-00954]** define an indicator (Default="CSMM") to be displayed when the Aircraft ID from the interfacility IFR flight plan does not match the Target ID received from the surveillance sensors.

A blinking ACID/Target ID mismatch indicator **shall[STARS-SSD-00955]** be displayed when the TCP is eligible to display the condition and the mismatch has not been acknowledged.

3.2.1.1.11.4.48 Beacon Code Mismatch Disassociation Indicator

A data field **shall[STARS-SSD-00956]** define an indication, for an adapted period of time, that a flight plan, not under the control of an external facility, has been disassociated from its track due to beacon code mismatch or Initiate Transfer replacing the flight plan.

3.2.1.1.11.4.49 TSAS Data Fields

A TSAS data field as reported by TBFM **shall[STARS-SSD-00957]** be defined for the following:

a. Advised airspeed and its associated meter point if the difference from the track airspeed exceeds the threshold set at that TCP
b. The early/late indicator calculated for a flight if there is no advised airspeed
c. The calculated scheduled and estimated time remaining until arrival for a flight
d. An RNP Capability indicator
e. The runway sequence number calculated for a flight when enabled for display at the TCP
f. The scheduled runway for a flight when it is different from the runway in scratchpad and that scratchpad is not an adapted alias for the scheduled runway
g. The track airspeed.

3.2.1.1.11.5 Display of Target Data

3.2.1.1.11.5.1 Radar Coordinates

All target and map data **shall[STARS-SSD-00958]** be displayed in radar coordinates.

3.2.1.1.11.5.2 Adaptable Data Block

3.2.1.1.11.5.2.1 Data Block Types

The capability **shall[STARS-SSD-00959]** exist to define multiple data block types that include any combination of the specified data fields based on adaptation.

The capability **shall[STARS-SSD-00960]** exist to apply adapted data block type selection criteria separately to individually adapted display positions according to their associated TCPs.

The capability **shall[STARS-SSD-00961]** exist to define a secondary data block that includes an adaptable combination of the data fields in Section 3.2.1.1.11.4, Data Fields.

3.2.1.1.11.5.2.2 Data Block Size

The data block sizing **shall[STARS-SSD-00962]** permit an adaptable definition of data elements to include at least five lines with each containing up to 20 characters including blanks and uniquely defined in adaptation.

3.2.1.1.11.5.2.3 Timeshare of Data Fields

All data fields in a data block **shall[STARS-SSD-00963]** have the capability to share the same area by alternating the display of 2, 3 or 4 data fields over a set time, per adaptation.

The time duration of each timeshare display phase **shall[STARS-SSD-00964]** be adaptable between 0.5 and 5.0 seconds in 0.1 second increments.

When a track is in certain alert conditions, the priority of altitude data **shall[STARS-SSD-00965]** be increased above that of other data in timeshare display phases. When the track is in handoff and Mode C data is unavailable, the pilot-reported altitude will be displayed in clock phase 1 during an LA alert condition.

When multiple data fields time share the same area of a data block, adaptation **shall[STARS-SSD-00966]** determine the sequence of the fields to be displayed.

3.2.1.1.11.5.2.4 Priority of Data Fields

Data fields that occupy the same position in a data block **shall[STARS-SSD-00967]** allow adaptable priorities to be assigned to control their display.

3.2.1.1.11.5.2.5 Leader Line

Per adaptation the leader line **shall[STARS-SSD-00968]** point from the displayed target to any line of the data block and will not overlay any portion.

When an owning TCP displays a new leader line direction for an associated track, the event **shall[STARS-SSD-00969]** be recorded.

3.2.1.1.11.5.2.6 Leader Line - Consolidation

When the ownership of a track changes as a result of full consolidation, the default leader line orientation **shall[STARS-SSD-00970]** become that of the receiving TCP.

3.2.1.1.11.5.2.7 Adaptable Leader Direction

Data block leader line direction **shall[STARS-SSD-00971]** be based upon a combination of system status and adaptation.

3.2.1.1.11.5.2.8 Adaptable Conditions

Control of the color and blink condition of any data block field **shall[STARS-SSD-00972]** be adaptable.

3.2.1.1.11.5.2.9 Data Block Color Priority
The color priority for full, partial and limited data blocks **shall[STARS-SSD-00973]** follow an established priority hierarchy.

3.2.1.1.11.5.3 Display Presentation Views

3.2.1.1.11.5.3.1 Multiple Sensor Display
The multiple sensor view will not be available at TCWs and TDWs that are in DSA mode (STARS ELITE only).

The TCW and TDW **shall[STARS-SSD-00974]** display air traffic data from integrated multiple sensors as a single display view.

In multiple sensor view, the TCW and TDW **shall[STARS-SSD-00975]** display air traffic data from integrated multiple sensors in either a reported or fused view.

3.2.1.1.11.5.3.2 Single Sensor Ground/Slant Position
The TCW and TDW **shall[STARS-SSD-00976]** display air traffic data in either single sensor ground, single sensor slant or PAM position display view.

3.2.1.1.11.5.4 Digital Map Display
The TCW and TDW **shall[STARS-SSD-00977]** display a minimum of 10 digital maps simultaneously or individually.

When display setting is at minimum range, digital map elements separated by a distance that corresponds to the separation of adjacent display pixels **shall[STARS-SSD-00978]** be displayed as separate pixels.

3.2.1.1.11.5.5 Quicklook and Quicklook Plus Display
A track that is not eligible for Quicklook plus, but is eligible for Quicklook or regional Quicklook **shall[STARS-SSD-00979]** display a full data block in the adapted Data Block Unowned color.

A track that is eligible for Quicklook plus **shall[STARS-SSD-00980]** display a full data block in the adapted Data Block Owned color.

3.2.1.1.11.5.6 Range Rings
The TCW and TDW **shall[STARS-SSD-00981]** display symmetric circular range rings at a minimum of 2, 5, 10, and 20 nmi intervals centered on any point.

3.2.1.1.11.5.7 Altitude/Geographic Restriction Display
The TCW and TDW **shall[STARS-SSD-00982]** display the name of a selected altitude or geographic restriction area and the associated altitude restriction at an adapted location on the display.

3.2.1.1.11.5.9 Display of Controller Aids

3.2.1.1.11.5.9.1 CA/MCI

3.2.1.1.11.5.9.1.1 CA/MCI Visual Alerts

When CA/MCI is enabled, the TCW and TDW **shall[STARS-SSD-00983]** blink safety alerts at the owner's TCP when the aircraft is in conflict.

When CA/MCI is enabled, the TCW and TDW **shall[STARS-SSD-00984]** blink safety alerts at the previous owner's TCP when the full data block is displayed in the Data Block Owned/Previously Owned color, blink color, or regardless of color as well as non-owning TCPs with full data blocks, when adapted.

3.2.1.1.11.5.9.1.2 CA/MCI Aural

When CA/MCI is enabled and the aircraft is not located within an aural alarm inhibit region, the TCW and TDW **shall[STARS-SSD-00985]** sound the aural alarm at the owner's TCP when adapted and:

a. The aircraft is in conflict
b. The FDB is in Data Block Owned/Previously Owned color or blink color at the previous owner’s TCP
c. The FDB is displayed at a non-owning TCP
d. Or, the FDB is displayed at the previous physical TCP.

3.2.1.1.11.5.9.2 MSAW

3.2.1.1.11.5.9.2.1 MSAW Visual

When MSAW is enabled, the TCW and TDW **shall[STARS-SSD-00986]** blink safety alerts at the owner's TCP when adapted and:

a. The aircraft is in MSAW
b. The FDB is in Data Block Owned/Previously Owned color or blink color at the previous owner’s TCP
c. The FDB is displayed at a non-owning TCP
d. Or, the FDB is displayed at the previous physical TCP.

3.2.1.1.11.5.9.2.2 MSAW Aural

When MSAW is enabled and the aircraft is not located within an aural alarm inhibit region, the TCW and TDW **shall[STARS-SSD-00987]** sound the aural alarm at the owner's TCP when adapted and:

a. The aircraft is in MSAW
b. The FDB is in Data Block Owned/Previously Owned color or blink color at the previous owner’s TCP
c. The FDB is displayed at a non-owning TCP
d. Or, the FDB is displayed at the previous physical TCP.

3.2.1.1.11.5.9.3 FMA

FMA alert processing **shall[STARS-SSD-00988]** be inhibited for any track that is displayed as unassociated.

3.2.1.1.11.5.9.3.1 Magnification Ratio

When a TCW is in FMA mode and the magnification ratio is set greater than one, the geographic display **shall[STARS-SSD-00989]** be distorted such that the dimension perpendicular to the approach course line of the selected AMZ is scaled to appear to use a smaller range than the same dimension parallel to the approach course lines, by the selected magnification ratio.

3.2.1.1.11.5.9.3.2 Reference Lines

When in FMA mode and when the combination of display range and magnification ratio is set such that the range setting divided by the magnification ratio is 16 nautical miles or less, reference lines **shall[STARS-SSD-00990]** be displayed with a spacing corresponding to 200 feet starting at 200 feet from each final course line of the selected AMZ and extending to the adjacent NTZ.

3.2.1.1.11.5.9.3.3 Visual Alert Indications

An FMA Warning alert **shall[STARS-SSD-00991]** be indicated by an adaptable text string in the data block, with the NTZ outline and data block text appearing in the Alert color.

An FMA Surveillance alert **shall[STARS-SSD-00992]** be indicated by an adaptable text string in the data block, in the Alert color.

An FMA Runway alert **shall[STARS-SSD-00993]** be indicated by an adaptable text string in the data block, in the Alert color.

An FMA Caution alert for NTZ predicted zone violation **shall[STARS-SSD-00994]** be indicated by an adaptable text string in the data block, with the NTZ outline and the data block text appearing in the Caution color.

3.2.1.1.11.5.9.3.4 Voice Alert Indications

With the exception of a Warning to Caution transition, any newly-established FMA alert condition for a track **shall[STARS-SSD-00995]** initiate a voice alert indication identifying the flight followed by the alert condition for the track.

The flight identification portion of the voice alert indication **shall[STARS-SSD-00996]** conform with standard phraseology as directed in FAAO 7110.65.

The alert condition **shall[STARS-SSD-00997]** be identified by adaptable (type: System-Wide) spoken text with default phrasing per the following table:

Condition	Default Spoken Text
Warning	“WARNING”
Surveillance	“COAST”
Runway (wrong, missing or invalid runway)	“WRONG RUNWAY”
Caution (NTZ prediction)	“CAUTION”

3.2.1.1.11.5.9.4 Emergency Information

A blinking symbol **shall[STARS-SSD-00998]** be displayed at the airport's location for an adapted time interval or until the next command if adapted as zero interval.

For the closest airport capable of handling the selected aircraft, the TCP **shall[STARS-SSD-00999]** display the range and bearing in nmi and degrees respectively and any of the following adapted data:

a. Airport ID and full names
b. Unicom frequency
c. Runway lighted - "L"
d. Longest runway length, width or identifier
e. Longest runway composition (e.g. A = asphalt, C = concrete, G = grass)
f. Field Elevation
g. Pilot controlled lighting available - "PL"

3.2.1.1.11.5.9.5 Hospital Information

Hospital information **shall[STARS-SSD-01000]** display the hospital identifier, helipad equipped, lighted/unlighted status, and hospital list entry number.

3.2.1.1.11.5.9.6 Range/Bearing Line

A range/bearing line (RBL) is defined as connecting two points, two tracks, or a point and a track and **shall[STARS-SSD-01001]** have associated a readout of range and bearing of the second point with respect to the first.

If one endpoint is a track, the readout **shall[STARS-SSD-01002]** display the time to travel the range at the track's current speed and removed from display upon loss of target reports.

3.2.1.1.11.5.9.7 Significant Point Information

A blinking symbol **shall[STARS-SSD-01003]** be displayed at the selected point's location for an adapted time interval or until the next command if adapted to zero.

For the significant point, the TCP **shall[STARS-SSD-01004]** display the range and bearing from the selected aircraft or geographic location to the significant point as well as the adapted 1 or 2 line text information.

3.2.1.1.11.5.9.8 Airspace Violation Alert

Unless ASV Alert processing is locally disabled, an ASV Alert for an associated track **shall[STARS-SSD-01005]** cause the TCP to display a full data block for the track and continuously blink its Mode C altitude field.

When an ASV Alert occurs or ceases for a track, the event **shall[STARS-SSD-01006]** be recorded.

3.2.1.1.11.5.10 Target Position

3.2.1.1.11.5.10.1 Overlapping Coverage

When target reports from single or multiple sensors are received, the TCW/TDW **shall[STARS-SSD-01007]** display a single position symbol and data block for an aircraft.

3.2.1.1.11.5.10.2 Reported Target Position

The TCW/TDW **shall[STARS-SSD-01008]** locate the target ensemble on the screen based on reported surveillance data for all cases except fused track view or single sensor where reports from the selected sensor are missing and the updates are from another sensor in which case fused track data will be used.

3.2.1.1.11.5.10.3 Tracked Position

The TCW/TDW **shall[STARS-SSD-01009]** display the tracked position of a target when the track has not correlated.

In FMA mode, the TCW **shall[STARS-SSD-01010]** display the tracked position symbol as a circle.

In fused-track display mode, the TCW/TDW **shall[STARS-SSD-01011]** use information from the tracker to extrapolate position to an adaptable display update time, then update the location on the screen of the target ensemble for each target.

The fused-track display mode update interval **shall[STARS-SSD-01012]** be separately adaptable for each of the following cases:

a. TCW Normal workstation FMA mode
b. TCW Training workstation FMA mode
c. TCW Performance Verification FMA mode
d. All other TCW workstation modes
e. All TDW workstation modes

Adaptation data for remote TCWs and TDWs **shall[STARS-SSD-01013]** define the areas in which track data is displayed.

3.2.1.1.11.5.10.4 Target Symbology

3.2.1.1.11.5.10.4.1 Track Position Symbol for Associated Targets

When a single character TCP symbol is adapted, only the second character, which represents the position within its subset or terminal area, **shall[STARS-SSD-01014]** be displayed.

When a two character TCP symbol is adapted, the subset and position **shall[STARS-SSD-01015]** be displayed.

Site adaptation **shall[STARS-SSD-01016]** specify for each TCP the number of characters to display as the position symbol and when under specific conditions it may change.

3.2.1.1.11.5.10.4.2 Track Position Symbol for Unassociated Targets

When a track has established, the TCW/TDW **shall[STARS-SSD-01017]** display a unique unassociated track symbol for primary-only tracks, and for each of the following non-primary track

types: Mode C selected code, Mode C non-selected code, Non-Mode C selected code, Non-Mode C non-selected code.

In FMA mode, the TCW **shall[STARS-SSD-01018]** display the unassociated target position symbol as a circle.

In fused display view, the TCW/TDW **shall[STARS-SSD-01019]** display a unique unassociated track symbol for a non-established beacon track from only the current preferred sensor within the adapted surveillance/altimeter data tile for each of the following types: Mode C selected code, Mode C non-selected code, Non-Mode C selected code, Non-Mode C non-selected code.

3.2.1.1.11.5.10.4.3 TCP Symbol
The TCW/TDW **shall[STARS-SSD-01020]** display the TCP symbol for targets that are controlled by another TCP.

3.2.1.1.11.5.10.4.4 Fixed Targets
The TCW/TDW **shall[STARS-SSD-01021]** display the position of the following fixed targets:

a. Parrots
b. Permanent echoes
c. Search test targets
d. Beacon & search RTQC targets
e. Multilateration reference transmitters

3.2.1.1.11.5.10.5 Range and Heading
The TCW/TDW **shall[STARS-SSD-01022]** display range and heading information from a selected aircraft to a specified fix or airport.

3.2.1.1.11.5.10.6 Uncorrelated Search-Only Target Display
Upon TCP selection, uncorrelated search-only targets **shall[STARS-SSD-01023]** either be displayed everywhere or in adapted geographic polygon areas only.

3.2.1.1.11.5.10.8 Associated Targets in Single and Multi-sensor Ground Range View
When a center owned track is being updated by Track Update (TU) interfacility messages only, no target symbol **shall[STARS-SSD-01024]** be displayed.

When not in fused display view, the system **shall[STARS-SSD-01025]** display targets reported as correlated search targets by an ASR-9 or 11 radar if enabled by adaptation.

3.2.1.1.11.5.11 Secondary Data Block
Upon TCP selection of a flight displaying a full data block, the adapted secondary data block **shall[STARS-SSD-01026]** be displayed adjacent to the full data block.

3.2.1.1.11.6 Display of List and Tabular Data

3.2.1.1.11.6.1 Display Coordinates
All list and tabular data **shall[STARS-SSD-01027]** be displayed in display coordinates.

3.2.1.1.11.6.2 Duplicate Entries
The TCW/TDW **shall[STARS-SSD-01028]** uniquely indicate when a TCP is viewing or performing entries on an aircraft with a duplicate ACID or Beacon Code.

A duplicate beacon code condition **shall[STARS-SSD-01029]** be indicated for an associated track when there is at least one other track that is reporting the same code, is within the adapted auto acquisition region, and has not been suppressed for duplicate beacon display.

3.2.1.1.11.6.4 Display Presentation View
The TCW/TDW **shall[STARS-SSD-01030]** display an indication of the radar presentation view.

3.2.1.1.11.6.5 Data Lists

3.2.1.1.11.6.5.1 Adaptable
The TCW/TDW **shall[STARS-SSD-01031]** be able to simultaneously display at least sixteen adaptable data lists each of which includes any combination of data fields and a title as specified by adaptation.

The TDW **shall[STARS-SSD-01032]** display any of two adaptable data lists, each of which includes sets of any combination of data fields specified in adaptation. (STARS LITE only)

3.2.1.1.11.6.5.2 Data Lists - Inclusion/Exclusion
Adaptation data **shall[STARS-SSD-01033]** determine if and when to include or exclude data in specified data lists and TCW/TDW positions.

Each data list **shall[STARS-SSD-01034]** be adaptable to have or not have a property whereby visible entries for a flight remain in the list when the corresponding flight data is removed from the system.

3.2.1.1.11.6.5.3 Data List Field Order
Adaptation **shall[STARS-SSD-01035]** define the ordering of data list by any field.

3.2.1.1.11.6.5.4 Capacity
Each TCW/TDW data list **shall[STARS-SSD-01036]** have an adapted entry capacity that can also be set by TCP input.

An indication, based on adaptation **shall[STARS-SSD-01037]** be displayed if the number of entries available for display exceeds the maximum entry count for that list.

3.2.1.1.11.6.5.5 Data List Entry Identifier
A numeric list line indicator **shall[STARS-SSD-01038]** identify a flight within a list.

3.2.1.1.11.6.5.6 Special Lists

3.2.1.1.11.6.5.6.1 LA/CA/MCI List

The LA/CA/MCI list **shall[STARS-SSD-01039]** include an entry for each flight that is in MSAW, MCI or CA alert state and is eligible for Alert display at the TCW/TDW.

A CA, MCI or MSAW entry in the LA/CA/MCI list **shall[STARS-SSD-01040]** include either both associated tracks, one associated track and the beacon code of the other or the associated track and its altitude respectively as well as a "CA", "MCI" or LA indicator.

Entries in the LA/CA/MCI list **shall[STARS-SSD-01041]** be ordered such that the more-recent alert event is nearer the top of the list.

The LA/CA/MCI list title **shall[STARS-SSD-01042]** indicate which of the safety algorithms are enabled for the system.

An indication **shall[STARS-SSD-01043]** be displayed as the first entry of the LA/CA/MCI list when the list entry count exceeds 50 entries.

3.2.1.1.11.6.5.6.2 Sign-On List

The Sign-On list **shall[STARS-SSD-01044]** include an entry for each user signed on at that TCW/TDW.

A Sign-On list entry **shall[STARS-SSD-01045]** include user name, position signed on to, time of sign-on entry, and developmental name if applicable.

3.2.1.1.11.6.5.6.3 Hospital List

The Hospital list **shall[STARS-SSD-01046]** display adapted hospitals that are associated to the same Terminal Sector(s) as any of the logical TCPs at the TCW/TDW.

The width of the hospital name column **shall[STARS-SSD-01047]** be sized to accommodate the longest adapted hospital name with one space to separate for the next column.

3.2.1.1.11.6.5.6.4 CA Zone Suppression List

Each CA Zone Suppression list entry **shall[STARS-SSD-01048]** identify the zone by name and indicate the zone status with respect to CA processing.

The CA Zone Suppression list title line **shall[STARS-SSD-01049]** display the airport designator name.

3.2.1.1.11.6.5.6.5 CRDA Status List

The CRDA status list includes an entry for each application adapted for the terminal area of the displaying TCW/TDW, where each entry **shall[STARS-SSD-01050]** contain an indication of CRDA applications currently enabled and their mode, the identity; airport and involved runways for the application, and a list of the TCPs with the application enabled.

3.2.1.1.11.6.5.6.6 Text List

Each TCW/TDW **shall[STARS-SSD-01051]** display up to four workstation notes in separate display areas, with each containing up to 32 characters per line.

Each TCW/TDW **shall[STARS-SSD-01052]** provide an area to display up to 20 text messages of up to 32 characters per message.

The list of received text messages **shall[STARS-SSD-01053]** be displayed upon receipt of a text message for any TCP assigned to that TCW/TDW or upon sign-on to that position.

Creation, modification or deletion of a text message **shall[STARS-SSD-01054]** be precluded for a period of time following any change by another keyboard to the list of text messages.

3.2.1.1.11.6.5.6.7 MOA Status List

The Military Operations Area (MOA) status list **shall[STARS-SSD-01055]** include an adapted title, a line for each adapted MOA segment and an entry showing the ACID of the assigned flight for each MOA segment and level.

MOA assignment data entered for a flight **shall[STARS-SSD-01056]** be displayed in the scratch pad field, exempt the flight from automatic handoff processing and determine assignment of one or two of the up to 10 possible, MOA segments and in one or two levels (”H” or “L”).

Assignment removal of a flight from a MOA **shall[STARS-SSD-01057]** occur upon entry of a command beginning with the MOA assignment character and having null MOA assignment data or MOA assignment data not corresponding to any MOA segment.

Upon an attempted MOA assignment that fails a warning **shall[STARS-SSD-01058]** be displayed in the list with a flashing ACID that will remain in that condition until such time as the assignment is corrected or removed.

3.2.1.1.11.6.5.6.8 Flight Plan Time Out Warning List

The Time Out Warning list **shall[STARS-SSD-01059]** display an adapted title and those non-active flight plans that are departures for the airport adapted to the list and are within 10 minutes of a user-selected number of minutes past their proposed departure time, unless designated for exclusion by manual entry.

3.2.1.1.11.6.5.6.9 Display Military Alert Suppression Zone List

The MASZ List display **shall[STARS-SSD-01060]** include the Zone Identifier and the suppressed alert type for each adapted and enabled zone.

3.2.1.1.11.6.5.6.10 Restriction Area List

The Restriction Area List **shall[STARS-SSD-01061]** include the number and identifier for each current restriction area.

3.2.1.1.11.6.5.6.11 Altimeter List

The altimeter list **shall[STARS-SSD-01062]** accommodate up to 40 altimeter reporting stations, one per row, in the same order as adapted.

Each row in the altimeter list **shall[STARS-SSD-01063]** include the following information in the listed order from left to right:

a. Three character altimeter reporting station identifier followed by a space
b. Current altimeter setting in either Inches of Hg or miliBars, based on adaptation
c. Code indicating altimeter status as follows:
    1. "A" if method is Automatic and a valid report is available
    2. "M" if method is Automatic and successive updates have been missing for an adapted time interval
    3. " " (blank) if method is known and TCP entered
    4. "E" if method is Estimated

Any row in the altimeter list **shall[STARS-SSD-01064]** be displayed blinking in the unacknowledged Caution color, if the altimeter setting method is Automatic and consecutive updates are missing for more than an adaptable threshold.

If an altimeter list has been inhibited from display at a TCW/TDW and a reporting station in the list has an altimeter setting method of Automatic and experiences any missing reports, the list **shall[STARS-SSD-01065]** be displayed at its previous or default location.

3.2.1.1.11.6.5.6.12 ADS-B Radio (Ground) Station List

The ADS-B Radio Station list **shall[STARS-SSD-01066]** display an adapted title and the adapted radio stations, including the name and abbreviated name in each row.

The ADS-B Radio Station list **shall[STARS-SSD-01067]** display failed and offline radio stations in the adapted non-blinking alert color, followed by online radio stations in the adapted Lists color.

When in a training exercise, the ADS-B Radio Station list **shall[STARS-SSD-01068]** indicate the radio station statuses as supplied by the simulation system.

3.2.1.1.11.6.5.6.13 TSAS Status List

The TSAS Status list **shall[STARS-SSD-01069]** display the enabled/disabled state of TSAS tools for TCPs adapted for the requesting TCP.

3.2.1.1.11.6.5.6.14 Code/Callsign List

The TCW/TDW **shall[STARS-SSD-01070]** display a list of code/callsign pairs for which the callsign is not displayed in an LDB while in DSA or DSF modes.

3.2.1.1.11.6.6 Preview Area

3.2.1.1.11.6.6.1 Data Entry Contents

A preview area on the TCW/TDW for each input device **shall[STARS-SSD-01071]** display the content of any input data entry prior to submission of the entry and consist of up to 10 lines each containing up to 32 characters.

3.2.1.1.11.6.6.2 Editing Prior to Entry

TCP input **shall[STARS-SSD-01072]** have the capability to edit data that is displayed in the preview area prior to submission of the entry for processing.

3.2.1.1.11.6.6.3 Editing Erroneous Entry
When an entry error occurs, the TCW/TDW **shall[STARS-SSD-01073]** display the error in the preview area and allow the entry to be edited and resubmitted.

3.2.1.1.11.6.8 Readout Area
An area of up to 3 lines on the TCW/TDW for each input device **shall[STARS-SSD-01074]** display response or error messages for each input data entry.

When displaying flight data for a single flight in the readout area, the selection and ordering of display data items **shall[STARS-SSD-01075]** be established by adaptation.

3.2.1.1.11.6.9 Display Preference Information
An area on the TCW/TDW **shall[STARS-SSD-01076]** display TCP preference setting information for each TCP.

3.2.1.1.11.6.10 System Data
The system data area **shall[STARS-SSD-01077]** display the following:

a. Time
b. Safety alert inhibits
c. ATIS data
d. TCP Consolidation status
e. System errors that affect operational capabilities at the TCW/TDW
f. Selected Beacon Codes
g. Altitude filter limits
h. CRDA application enabled
i. PAM display view selected

3.2.1.1.11.6.10.1 Display
The system data area **shall[STARS-SSD-01078]** be displayed at the TCW/TDW except when no data is available.

3.2.1.1.11.6.10.2 Relocation
The system data area **shall[STARS-SSD-01079]** be displayed at any selected location on the TCW/TDW.

3.2.1.1.11.6.10.3 Select - Inhibit System Data
Only system data lines that contain at least one selected field **shall[STARS-SSD-01080]** be displayed.

Operator commands **shall[STARS-SSD-01081]** select and remove all non-mandatory fields in the system data area.

3.2.1.1.11.6.10.4 Status

3.2.1.1.11.6.10.4.1 System Status

The system data area **shall[STARS-SSD-01082]** display the status of:

a. system wide ATC operational functions,
b. current service level if applicable, and
c. available service levels if applicable.

Enabling or disabling of the recording of CDR data **shall[STARS-SSD-01083]** be indicated in the system data area if adapted to be displayed for the TCW/TDW.

3.2.1.1.11.6.10.4.2 TCW/TDW Status

The system data area **shall[STARS-SSD-01084]** display the status of operational functions that have been selected and inhibited at the TCW/TDW or TCP level.

TCW/TDW failure detection **shall[STARS-SSD-01085]** be indicated at the affected TCW/TDW with a banner notification of fixed location and size of at least 3/8 inch in height and 4 inches in width.

Upon detection of a critical failure, the TCW/TDW display **shall[STARS-SSD-01086]** be frozen and display an informational message to the operator.

In the absence of a failure, when the FSL service level is unavailable, a TCW/TDW in Normal or Training mode **shall[STARS-SSD-01087]** display a warning banner.

The system data area **shall[STARS-SSD-01088]** display a single Red Check symbol consisting of a solid red inverted delta centered within a green outline box.

3.2.1.1.11.6.10.5 Unique General Information

The system data area **shall[STARS-SSD-01089]** display the primary and up to 9 unique auxiliary general information strings and their optional associated ATIS character.

When a displayed unique auxiliary general information string and ATIS character are empty, the line label **shall[STARS-SSD-01090]** be displayed in system data.

Upon change to a displayed general information string, the system data area **shall[STARS-SSD-01091]** blink the string based on adaptation.

3.2.1.1.11.6.10.6 Quicklook

The system data area **shall[STARS-SSD-01092]** indicate any TCPs that have been selected for Quicklook or Quicklook plus.

When a TCW/TDW is adapted to allow Quicklook to follow consolidation, then the newly consolidated TCP **shall[STARS-SSD-01093]** be added to the list of TCPs selected for Quicklook or Quicklook plus if not already selected or does not have all TCP's selected for Quicklook.

3.2.1.1.11.6.10.7 Sensor Source Identification

In single sensor presentation mode, the system data area **shall[STARS-SSD-01094]** indicate the source sensor providing information for that TCW/TDW.

3.2.1.1.11.6.10.8 Sectorization Indicator
The system data area **shall[STARS-SSD-01095]** display the currently selected configuration plan for primary TCP at the TCW/TDW.

3.2.1.1.11.6.10.10 Altimeter
The system data area of a TCW/TDW **shall[STARS-SSD-01096]** accommodate up to 6 altimeter reporting station fields, 3 per row.

Each altimeter reporting station field **shall[STARS-SSD-01097]** include the following information in the listed order from left to right:

a. Three character ID
b. Current setting
c. Status code

Any altimeter reporting station field **shall[STARS-SSD-01098]** be displayed blinking in the unacknowledged Caution color if the altimeter setting method is Automatic and consecutive updates are missing for more than an adaptable threshold.

When an altimeter reporting station has been adapted for but inhibited from display, has an altimeter status of Automatic, and experiences the missing data condition described in shall[STARS-SSD-01098], the reporting station(s) **shall[STARS-SSD-01099]** be displayed at their previous location(s) within the system data area.

3.2.1.1.11.6.10.17 Transponder Indicators
The system data area **shall[STARS-SSD-01100]** display transponder indicators.

The Alert SPC indicators **shall[STARS-SSD-01101]** be displayed non-blinking in the system status area in the Alert color.

The characters, MI, and any of the other adapted codes **shall[STARS-SSD-01102]** be displayed non-blinking in the system status area in the Caution color.

3.2.1.1.11.6.10.18 Interfacility Status
When an IFDT interface is adapted for a site, the system data area **shall[STARS-SSD-01103]** display an indication upon experiencing a failure.

3.2.1.1.11.6.10.19 Test Targets
The system data area **shall[STARS-SSD-01104]** uniquely indicate that surveillance system search test targets are being received and displayed.

3.2.1.1.11.6.10.20 Display Settings
The system data area **shall[STARS-SSD-01105]** display the following display settings:

a. Range

b. predicted track line interval, and
c. weather history indicator

3.2.1.1.11.6.10.21 Weather Level Status
The system data area **shall[STARS-SSD-01106]** display weather levels indicating which of them are selected for display and which have available weather data.

3.2.1.1.11.6.10.22 Sensor Mode Indication
In FMA mode with an ASR-9 selected for display, the TCW system data area **shall[STARS-SSD-01107]** display ASR-9 status as blinking in the adapted caution color when Mode-S fails and IBI mode is active.

TCP input **shall[STARS-SSD-01108]** terminate blinking of system data.

The system data area **shall[STARS-SSD-01109]** display the ASR-9 Mode status only under all of the following conditions:
a. Single sensor view is selected
b. An ASR-9 Mode S radar is selected for display
c. Display of ASR-9 Mode status is enabled by adaptation.

When an adapted Coverage Zone (CZ) for a multilateration sensor has been communicated to have failed, in normal operations or by the simulator in training mode, the TCW system data area **shall[STARS-SSD-01110]** indicate the failure by appending to the AMZ line, the CZ name displayed non-blinking in the adapted alert color and display a banner notification of at least 3/8 inch in height and 4 inches in width.

3.2.1.1.11.6.10.23 Alignment
The contents of each system data field other than Weather Level Status **shall[STARS-SSD-01111]** be left-justified, using single spaces to separate data.

3.2.1.1.11.6.10.27 Sensor Fail Indication
The system data area **shall[STARS-SSD-01112]** indicate when a sensor is in a failed or off-line state by displaying the sensor name non-blinking in the adapted alert color.

In FMA mode, with a multilateration sensor selected, and the entire multilateration sensor has failed, or the sensor is in the off-line state, a banner notification of at least 3/8 inch in height and 4 inches in width **shall[STARS-SSD-01113]** be displayed.

The system data area **shall[STARS-SSD-01114]** display the abbreviated names of up to three ADS-B radio stations that are failed or offline, in the alert color unless the ADS-B sensor is failed/offline or inhibited by adaptation.

When in a training exercise, the system data area **shall[STARS-SSD-01115]** indicate the sensor or ADS-B radio stations statuses as supplied by the simulation system.

When a TCW/TDW is adapted to display a sensor fail banner, and a sensor fail occurs, then a banner notification **shall[STARS-SSD-01116]** be displayed of at least 3/8 inch in height and 4 inches in width, until acknowledged by TCP input at which time it will be removed.

3.2.1.1.11.6.10.28 ADS Inhibit
The system data **shall[STARS-SSD-01117]** display either TCW/TDW inhibit or site-wide inhibit of the ADS-B / non-ADS-B indicators.

3.2.1.1.11.6.10.29 ATPA Indicators
The system data area **shall[STARS-SSD-01118]** indicate at all displays in the current exercise when ATPA is disabled system-wide.

Each position that is adapted with an ATPA Approach Volume or has a position consolidated to it that is adapted for the volume, the system data area **shall[STARS-SSD-01119]** indicate the ATPA Approach Volumes that have been disabled by TCP input or enabled for 2.5 nmi Reduced Separation.

3.2.1.1.11.6.10.30 TBFM Indication
The system data **shall[STARS-SSD-01120]** indicate when the adapted TBFM interface is in a failed or off-line state.

3.2.1.1.11.6.10.31 Runway Status
The system data **shall[STARS-SSD-01121]** display runways with closed status at TCW/TDW positions related to the airport.

3.2.1.1.11.6.11 Display of Coordination Information

3.2.1.1.11.6.11.1 Coordination Messages
The TCW/TDW **shall[STARS-SSD-01122]** display coordination messages as ordered, coordination information with a notation to indicate when a message acknowledgment is required and adapted to display coordination information grouped per airport.

Coordination message acknowledgment **shall[STARS-SSD-01123]** be indicated as required if a flight appearing in a coordination information display changes ownership because of a configuration change and if adaptation calls for the coordination message to react to such change.

3.2.1.1.11.6.11.4 Information Display
The TCW/TDWs of adapted TCPs sending and receiving coordination messages **shall[STARS-SSD-01124]** display coordination information.

Flight data displayed in a coordination message information display **shall[STARS-SSD-01125]** be removed when the flight becomes associated with an active track.

A data field **shall[STARS-SSD-01126]** indicate the amount of time before the coordination message acknowledgement will expire.

The coordination list entry **shall[STARS-SSD-01127]** indicate a warning condition an adapted time period before reverting to the unacknowledged state.

3.2.1.1.11.6.11.5 Unsent Coordination Data
The TCW/TDW **shall[STARS-SSD-01128]** display a notation to indicate coordination data that has not been sent to the associated, adapted TCP.

3.2.1.1.11.6.12 Duplicate Target Address
The TCW/TDW **shall[STARS-SSD-01129]** indicate when a duplicate Target Address is detected.

3.2.1.1.11.6.13 Extrinsic Message Area
An Extrinsic Message Area on the TCW/TDW for each input device will display messages received from systems external to STARS.

The Extrinsic Message Area on the TCW/TDW, when enabled, **shall[STARS-SSD-01130]** display messages regarding the failure of commands issued to the TBFM system from that input device or informational messages received from the TBFM system.

The Extrinsic Message Area **shall[STARS-SSD-01131]** be cleared upon any of the following:
a. A new command is issued to the TBFM system
b. The CLEAR key is selected
c. An adapted duration following the last update.

3.2.1.1.12 Status Monitoring

3.2.1.1.12.1 Monitor FSL Resources
The status of the following resources **shall[STARS-SSD-01132]** be continually monitored:
a. FSL serial interface hardware
b. FSL subsystem computers
c. Support subsystem computers
d. FSL subsystem main network
e. Support Subsystem network
f. Global Positioning System (GPS) Time Source
g. Surveillance systems
h. TFMS interface
i. IFDT interface
j. FSL software components
k. Redundant Array of Independent Disks (RAID) Storage Device

The status of the following resources **shall[STARS-SSD-01133]** be continually monitored by FSL:
a. AIG communication router
b. ABPE terminal server
c. Logical ABPE interfaces
d. Logical TBFM interface

The status of the following resources **shall[STARS-SSD-01134]** be continually monitored by FSL (STARS LITE only):

a. FSL serial interface hardware
b. FSL subsystem computer
c. Radar external interfaces
d. FSL software
e. IFDT external interface
f. CDR drives
g. GPS Time Source

3.2.1.1.12.2 Automatic Status Data Acquisition

Resource status monitored by FSL and any failures detected **shall[STARS-SSD-01135]** be performed automatically.

3.2.1.1.12.5 MCP Failure Tolerance

In the event of MCP failure, the rest of the service level **shall[STARS-SSD-01136]** continue operating autonomously, providing ATC Operational functionality and a visual indication may be displayed on an associated workstation.

3.2.1.1.12.7 Software Component Status

Critical failure of a software component **shall[STARS-SSD-01137]** result in automatic warm-start of the computer. (STARS LITE only)

3.2.1.1.12.8 FSL Configuration Display

A graphic view of the resources monitored by FSL **shall[STARS-SSD-01138]** be displayed at the FSL MCP.

3.2.1.1.12.9 Function/Selection Display

The list of the selectable FSL MCP functions and the associated enable/disable selection **shall[STARS-SSD-01139]** be displayed.

3.2.1.1.12.10 External Interface Status

The external system interface error rate **shall[STARS-SSD-01140]** be calculated and compared with an adaptable threshold for the following external interfaces to determine failure:

a. Radar
b. IFDT
c. TFMS

An adaptable parameter **shall[STARS-SSD-01141]** determine whether manual acknowledgement at the MCP is required for interface fault conditions that have subsequently cleared.

3.2.1.1.12.11 Radar Status Monitoring

3.2.1.1.12.11.1 Radar Error

Errors detected in the data received from each radar **shall[STARS-SSD-01142]** be used to calculate the error rate, compare to an adaptable threshold and displayed for each radar.

3.2.1.1.12.11.4 Correction Factors

Current and calculated registration correction factors **shall[STARS-SSD-01143]** be displayed and indicate, with an alert, those values exceeding a threshold.

3.2.1.1.12.11.6 RTQC Message Display

RTQC messages from surveillance systems **shall[STARS-SSD-01144]** be displayed.

3.2.1.1.12.11.7 Status and Radar Identification Message Display

Status messages and Radar Identification messages from surveillance systems **shall[STARS-SSD-01145]** be displayed if available unless no Parrot, PE or Radar Identification messages were adapted.

3.2.1.1.12.11.9 Radar Status Message Processing

The system **shall[STARS-SSD-01146]**generate either an alert or alarm when a Status message from a radar indicates a radar abnormal condition or non-operational condition respectively.

When a status message from a long-range radar indicates that the radar is in Beacon Offset mode, and an adaptable parameter is set to discard data, then the system **shall[STARS-SSD-01147]** discard target data and weather data from that radar.

3.2.1.1.12.12 FSL Event Notifications

Notification data including the date and time **shall[STARS-SSD-01148]** be generated when any of the following FSL conditions are detected:

a. Alarm
b. Alert
c. Error
d. State change
e. Return to Normal
f. Function Enable/Disable

Redundant or duplicate notifications **shall[STARS-SSD-01149]** be filtered out.

3.2.1.1.12.13 MCP Status of Network Equipment

The FSL MCP **shall[STARS-SSD-01150]** display network switch status as "Degraded" if one or two switch ports are failed and "Fail" if three or more switch ports are failed.

3.2.1.1.12.14 ADS-B Status Monitoring

3.2.1.1.12.14.1 ADS-B Integrity and Accuracy Error Detection

The system **shall[STARS-SSD-01151]** generate a report message for ADS-B reports that are not test targets when any ADS-B report contains a National Integrity Categories (NIC), Navigation Accuracy Categories for Position (NACp), or Surveillance Integrity Level (SIL) value below the relevant adapted minimum value.

The system **shall[STARS-SSD-01152]** generate a report message for ADS-B reports that are not test targets when any ADS-B report has either a Validation Status of "Report determined to be invalid", or discarded due to ADS-B Data Quality Parameter.

3.2.1.1.12.14.2 ADS-B Latency Calculations

The average ADS-B target latency, as derived from the Position TOA, **shall[STARS-SSD-01153]** be compared with an adaptable threshold to detect an ADS-B error, generate an alert and update the status at the MCP.

3.2.1.1.12.14.3 ADS-B Update Interval

The percentage of tracks whose average ADS-B update interval exceeds the update interval adapted for the sensor **shall[STARS-SSD-01154]** be monitored against adaptable thresholds to detect an ADS-B update interval error at the CTV/SV level, generate an alert and update the interval status at the MCP.

3.2.1.1.12.14.4 ADS-B Test Messages

An alert **shall[STARS-SSD-01155]** be generated when any of the following occurs outside the adapted thresholds during an adapted time interval:

a. The number of ADS-B Test messages
b. The horizontal position in a Test Target message
c. The Test Target Address is different.

3.2.1.1.12.14.5 ADS-B CTV/SV Status Reports

The system **shall[STARS-SSD-01156]** generate an alert and update the status at the MCP when a CTV/SV ADS-B Service Status Report is received with any of the following issues:

a. The report is received more or less often than adapted
b. The Time of Status differs from the time of receipt by more than what is adapted
c. The received status is “ADS-B Reports Discarded”
d. The received status indicates and “Off-Line” condition.

3.2.1.1.12.14.6 ADS-B Duplicate Target Address Monitoring

The system **shall[STARS-SSD-01157]** generate a report message when any ADS-B report indicates that a duplicate Target Address condition has been detected.

3.2.1.1.12.14.7 ADS-B Statistics

3.2.1.1.12.14.7.1 ADS-B Report Statistics

During the system workload sampling interval, statistics **shall[STARS-SSD-01158]** be maintained for the following ADS-B reports:

a. That don’t include all required fields
b. That have a Version number different from adaptation
c. That have a Source Identifier not in adaptation
d. That have a TOA or TOMR above or below the adapted range for non-test targets
e. That have the same NIC value for non-test targets
f. That have a not available NACp or Navigation Accuracy Categories for Velocity (NACv) value for non-test targets

g. That have a SIL value = "other", 1 x 10-3 , 1 x 10-5 , 1 x 10-7 per flight hour or sample
h. That have Duplicate Address Flag set
i. That have a SIL supplement indicating information is based on probability
j. That have an Enhanced Validation status within an adaptable distance
k. That have a Geometric Vertical Accuracy of Unknown/>150 m, ≤ 150m, or ≤ 45m
l. That have a NIC6 Supplement indicating NIC6 Containment Radius of 0.6, 0.5, or 0.3 NM
m. That have a System Design Assurance Level = "other", Level D, C, or B
n. That have a Data Source Qualifier not in adaptation
o. For reports that fall outside the area of interest.

3.2.1.1.12.14.7.2 Service Status Reports – CTV/SV Context
The system **shall[STARS-SSD-01159]** maintain statistics for Service Status Reports Expected or Received for each CTV/SV.

The system **shall[STARS-SSD-01160]** generate a report message when any Service Status Report is received with a version number other than that in adaptation.

The system **shall[STARS-SSD-01161]** maintain the following CTV/SV statistics:
a. ADS-B Reports Discarded.
b. ADS-B Messages Received.
c. 1090ES Position Outlier Count.
d. Count of ADS-B Service Status indications of DEGRADED.
e. Count of ADS-B Service Status indications of OFFLINE.

3.2.1.1.12.15 TBFM Status Monitoring
The system **shall[STARS-SSD-01162]** generate an alarm when a Status message from the TBFM interface indicates a failure condition or has not been received for an adapted time.

3.2.1.1.13 Performance Monitoring
This section describes data that is collected and made available for display at the MCP.

3.2.1.1.13.1 Collection of Performance Data

3.2.1.1.13.1.1 Computer Hardware Resource Utilization Monitoring

3.2.1.1.13.1.1.1 Computer Hardware Resource Data Sampling Interval Adaptation
The computer hardware resource data sampling interval used for performance data collection **shall[STARS-SSD-01163]** be adaptable and real time selectable.

3.2.1.1.13.1.1.2 Peak Utilization
The peak percentage of processor and memory capacity in use during the computer resource data sampling interval **shall[STARS-SSD-01164]** be determined.

3.2.1.1.13.1.1.4 Network Utilization
The error rate at each network connection, during the computer hardware resource data sampling interval, **shall[STARS-SSD-01165]** be determined for each FSL subsystem computer.

3.2.1.1.13.1.1.5 Monitor Depletion of Computer Hardware Capacity

Percentages of memory capacity utilization **shall[STARS-SSD-01166]** be compared against adaptable thresholds to determine an alarm or alert condition.

3.2.1.1.13.1.2 System Workload Monitoring

3.2.1.1.13.1.2.1 System Workload Data Sampling Interval Adaptation

The system workload data sampling interval used for performance data collection **shall[STARS-SSD-01167]** be adaptable.

3.2.1.1.13.1.2.2 Track Storage Counts

The system **shall[STARS-SSD-01168]** determine the maximum number of following elements during the system workload data sampling interval:

a. Associated Tracks
b. Unassociated Tracks
c. Remaining Tracks
d. Training Tracks
e. New Tracks
f. Deleted Tracks

3.2.1.1.13.1.2.3 Flight Plan Counts

The number of flight plans in use, the number remaining and the percentage of remaining **shall[STARS-SSD-01169]** be determined during the system workload data sampling interval.

3.2.1.1.13.1.2.4 Target Report Counts

During the system workload data sampling interval, the peak and average count of primary radar only, beacon only and radar reinforced targets per scan **shall[STARS-SSD-01170]** be determined to a level of accuracy that corresponds to the maximum number of targets that fall within any 150 millisecond period.

During the system workload data sampling interval, the minimum, average, and maximum processing time **shall[STARS-SSD-01171]** be determined.

3.2.1.1.13.1.2.5 Monitor Depletion of System Workload Capacity

Percentages of remaining system workload capacity **shall[STARS-SSD-01172]** be compared against adaptable thresholds to determine an alarm or alert condition.

3.2.1.1.13.1.2.6 Comm Loop Time

During the system workload data sampling interval, the minimum, average, and maximum Comms Loop time **shall[STARS-SSD-01173]** be determined. (STARS only)

3.2.1.1.13.1.2.7 RAID Capacity

The minimum, average, and maximum RAID capacity used **shall[STARS-SSD-01174]** be determined in each system workload data sampling interval.

3.2.1.1.13.2 Performance Data Statistics

The maximum, minimum, and average value of each data item specified in Collection Of Performance Data section above **shall[STARS-SSD-01175]** be computed and displayed over an adaptable summarization interval when one is not specified by an operator, or if specified by an operator annotations may be added.

Upon MCP initiation and a user entered collection time, the following data for the RTQC Check Report **shall[STARS-SSD-01176]** be collected and made available to print, on a per radar basis with the results displayed at the initiating MCP:

a. Radar Reinforced & Unreasonable Altitude Change Rate
b. Mode C & 3/A Validity
c. Search & Beacon RTQC Reliability
d. Zero Code
e. Search & Beacon Blip/Scan
f. Beacon Azimuth & Range Splits
g. Long Range Radar reports with Bit 25 set
h. Average Beacon Hit Rate
i. Average Search & Beacon Run Length
j. Percentage of reports for each Quality, Confidence & Track Eligibility level
k. Aircraft Address Uniqueness (Mode S radars only)

PARROT, PE and ADS-B Test Message reliability data **shall[STARS-SSD-01177]** be collected per radar or ADS-B Radio Station and made available for display at the MCP.

3.2.1.1.14 System Control

3.2.1.1.14.1 General Control Requirements

Keyboard entry at a local TCW, TDW or MCW **shall[STARS-SSD-01178]** be capable of initiating MCP functionality at that workstation.

More than one MCP can be active at one time but only one **shall[STARS-SSD-01179]** have the authority to control resources.

Keyboard entry at an MCP **shall[STARS-SSD-01180]** establish or demand controlling authority from all other active MCPs.

The following resources **shall[STARS-SSD-01181]** be controlled by the MCP with controlling authority:

a. Subsystem computers
b. Serial interface hardware and associated interfaces
c. External network hardware and associated interfaces
d. GPS Time Source
e. CDR RAID devices and associated hardware
f. External AIG interfaces
g. ABPE interfaces

The following resources **shall[STARS-SSD-01182]** be controlled by the MCP with controlling authority (STARS LITE only):

a. Serial interface hardware and associated interfaces
b. CDR devices
c. GPS Time Source

Transfer of software components, software baselines and adaptation data **shall[STARS-SSD-01183]** be controlled by MCP input.

The capability **shall[STARS-SSD-01184]** be provided to install software baselines and adaptation data sets from electronic media. (STARS LITE only)

The MCP **shall[STARS-SSD-01185]** be capable of initiating diagnostics, to detect and localize to the LRU the source of hardware failures, for both subsystem computers and serial interface hardware.

The TBFM logical AIG interfaces, for both main and alternate paths, **shall[STARS-SSD-01186]** be controlled by the FSL MCPs.

The IFDT/AIG Out Switch connects the external interfaces for IFDT, ETMS, and AIG output to either FSL or EFSL.

TCP input on EFSL **shall[STARS-SSD-01187]** control the IDFT/AIG Out Switch to select EFSL or FSL, and put the following EFSL resources online or offline respectively:

a. EFSL ETMS external interface main and alternate feeds
b. EFSL IFDT systems external main and alternate feeds

3.2.1.1.14.2 System Configuration Control

Allocation of specific software components or baselines for operational use **shall[STARS-SSD-01188]** be controlled by MCP keyboard entry.

The MCP **shall[STARS-SSD-01189]** be capable of a keyboard entry to initiate a Cold or Warm start of the entire subsystem or selected components of the subsystem.

The MCP **shall[STARS-SSD-01190]** be capable of configuring any subsystem component to an On-line, Off-line or Standby, if capable, state.

The MCP **shall[STARS-SSD-01191]** be capable of a keyboard entry to partition the subsystem computers, initiate new versions of software in either partition and initiate separate instances of software in any partition.

Before allowing a cut-over to a new adaptation or software baseline the system **shall[STARS-SSD-01192]** verify that the selected software and adaptation data files are compatible.

Recovery from a system wide power failure **shall[STARS-SSD-01193]** return the system to its pre-failure state with some minor exceptions.

Recovery from a single resource failure of a redundant resource **shall[STARS-SSD-01194]** occur automatically if enabled.

Automatic subsystem restart **shall[STARS-SSD-01195]** be enabled and disabled by MCP Input.

Current adaptation data **shall[STARS-SSD-01196]** be saved locally at each subsystem processor.

3.2.1.1.14.3 External System Interface Control

An MCP keyboard entry **shall[STARS-SSD-01197]** be capable of initiating diagnostic tests on any external serial interface, enabling or disabling the flow of data from an external interface and enabling or disabling the weather presentation form any surveillance radar.

Diagnostic test results for On-line hardware will be used to update air traffic and MCP functions where test results for Off-line hardware **shall[STARS-SSD-01198]** only be available at the MCP.

Upon initiation the system **shall[STARS-SSD-01199]** calculate registration correction factors for each radar pair identified in adaptation or use ADS-B data if available.

Adaptable parameters **shall[STARS-SSD-01200]** specify the time interval, sample size and geographic area for RTQC correction factor calculations.

MCP keyboard entries **shall[STARS-SSD-01201]** be capable of initiating and selecting system derived registration correction factors as well as manually entered factors.

The system **shall[STARS-SSD-01202]** accept and apply manual or system generated registration correction factors that are within an adaptable numerical interval to radar target data.

MCP keyboard entries **shall[STARS-SSD-01203]** be available to perform the following:

a. Discard selected registration correction factors
b. Exclude radars from data collection and registration correction factor calculations
c. Apply or discard registration correction factors to surveillance processing functions
d. Enable/Disable ringaround beacon target suppression by radar and range
e. Enable/Disable reflected beacon target suppression by radar and range-azimuth.
f. Enable/Disable the reporting of the status of each adapted PARROT, PE, and RTQC

When the calculated registration correction factors are outside an adaptable numerical interval, the system **shall[STARS-SSD-01204]** generate an alert, discard the calculated correction factors, and substitute the correction factor last used for this radar in place of the discarded factors.

If reporting is inhibited for a PARROT, PE or RTQC, its status **shall[STARS-SSD-01205]** not contribute to the status of its associated radar.

When Wide Area Multilateration surveillance data is available, the system **shall[STARS-SSD-01206]** utilize the data to calculate radar range and azimuth registration correction factors.

3.2.1.1.14.4 Tracker Optimization

When enabled by a site adaptation parameter, MCP input **shall[STARS-SSD-01207]** allow a user with administrator privilege to view and modify the following parameters:

a. System Parameters
   1. Primary Track Minimum & Maximum Speed
   2. Primary Track Scan to Scan Speed Change Threshold
   3. Slow Primary Track Drop Timeout
   4. Display of ASR-9 or ASR-11 correlated radar-only targets
b. Radar Parameters
   1. Primary Track Initiation Minimum Reports
   2. Primary Track Initiation Maximum Scans
   3. Target Quality Filtering enable/disable and threshold
   4. Tentative Track Delay
   5. Track Establishment Minimum Distance

When a user attempts to modify the parameters in partition A, a dialog box and warning banner **shall[STARS-SSD-01208]** appear on the MCP and require that the user provide additional MCP input before changing any parameter.

3.2.1.1.14.5 Control of Dynamic Bias Correction

MCP input **shall[STARS-SSD-01209]** enable/disable Dynamic Bias Correction per STARS-SSD-00123.

3.2.1.1.15 FSL Verification

The verification functions are used to support the process of certification. Certification is used to ensure that the system (or a resource within it) is able to provide the specified service to the user.

3.2.1.1.15.1 Diagnostics

MCP input **shall[STARS-SSD-01210]** initiate the following diagnostics on a subsystem computer or serial interface hardware when that hardware is in the Off-line state:

a. CPU Status Check
b. Hardware Configuration
c. Hard Disk
d. Virtual Memory Usage Check
e. General SIO diagnostic (SIO only)
f. Network Interface

Periodic On-line diagnostic tests **shall[STARS-SSD-01211]** be performed, without human intervention, to verify that the following components are operating within acceptable ranges:

a. CPU Status Check
b. Hardware Configuration
c. Hard Disk

Periodic on-line tests **shall[STARS-SSD-01212]** be performed, based on MCP selection, to verify that application and adaptation data files are for the same release level and have not been corrupted.

MCP input **shall[STARS-SSD-01213]** initiate the following diagnostics, and prevent a second instance from being initiated, on a subsystem computer when that hardware is in the On-line state:

a. CPU Status Check
b. Hardware Configuration
c. Hard Disk
d. Network Interface
e. Data Recording Device (DRD) 1
f. DRD 2

Results of On-line, Off-line or periodic diagnostic tests **shall[STARS-SSD-01214]** be displayed at the MCP and alert notification provided upon failure of any periodic test.

3.2.1.1.15.2 Resource Verification

MCP input **shall[STARS-SSD-01215]** initiate the following Resource Verification test, on either PRTA or B, when that hardware is in the On-line or Standby state:

a. CPU Status Check
b. Hardware Configuration
c. Hard Disk
d. Network Interface
e. Application or Adaptation file corruption
f. Application or Adaptation file version check

MCP input **shall[STARS-SSD-01216]** prevent initiation of Resource Verification if it is already running, or on-line diagnostics or PV are running.

Once initiated, Resource Verification tests **shall[STARS-SSD-01217]** run to completion or termination.

Resource Verification test report **shall[STARS-SSD-01218]** contain a summary of the test with time and date stamp along with status of what passed and failed, at the initiating MCP, with an option to print.

3.2.1.1.15.3 Performance Verification (PV)

MCP input **shall[STARS-SSD-01219]** initiate PV tests, with a user selectable scenario, at any time unless PV or Resource Verification or On-line diagnostics are already running.

Once initiated, Performance Verification tests **shall[STARS-SSD-01220]** run to completion or termination.

PV tests **shall[STARS-SSD-01221]** be executed using simulated surveillance and flight data with results displayed on a designated TCW/TDW.

PV **shall[STARS-SSD-01222]** test the following FSL processing:

a. Permanent Echo
b. PARROT
c. RTQC Test Targets
d. Fixed Beacon Test Targets
e. Non-radar Sensor Status
f. Special Condition Code processing for radar sensors
g. Special Condition Code processing for non-radar sensors
h. Conflict Alert
i. Minimum Safe Altitude Warning
j. FMA, including PRM-A (where applicable)

When in Normal mode, FSL **shall[STARS-SSD-01223]** loop back the data from one of the radars in the PV scenario through the dedicated PV serial interface hardware.

Performance Verification test report **shall[STARS-SSD-01224]** contain a summary of the test with time and date stamp along with status of what passed, failed and any deviations at the initiating MCP.

3.2.1.1.16 Data Recording

3.2.1.1.16.1 Continuous Recording

Data recording **shall[STARS-SSD-01225]** be carried out on a continual basis if the equipment is available.

3.2.1.1.16.2 Recording Medium

In a disk-based environment, data **shall[STARS-SSD-01226]** be recorded to two independent disk-based recording devices that are, at a minimum, configured to a RAID level 5.

The System **shall[STARS-SSD-01227]** provide the capability to copy recorded data to a removable media.

3.2.1.1.16.3 Twenty-Four Hour Recording

A minimum of twenty-four hours of system data **shall[STARS-SSD-01228]** be recorded on one or more elements of the same recording medium without operator intervention while the system operates under the maximum workload and response.

3.2.1.1.16.4 Continuity of Data Recording

Recording **shall[STARS-SSD-01229]** continue without loss of data if only one of the recording devices is full or has failed.

3.2.1.1.16.5 Time Stamping

Each data record **shall[STARS-SSD-01230]** have a date and time stamp applied when the event occurs.

3.2.1.1.16.6 Data Storage Duration
CDR data **shall[STARS-SSD-01231]** be recorded and retained for the current and previous 45 days with the recording device set to automatically overwrite data beginning on the 46th day.

3.2.1.1.16.7 Data to be Recorded
With the exception of ADS-B non-test target reports that fall outside the adapted overall area of interest, all sensor target report data **shall[STARS-SSD-01232]** be recorded.

All flight plan, including Interfacility messages, tracking, TFMS, TBFM, ABPE and data that enters or leaves via the AIG **shall[STARS-SSD-01233]** be recorded.

All data entry inputs from a TCW, TDW or MCP **shall[STARS-SSD-01234]** be recorded.

All Performance data, MCP notification data, error condition data, system configuration data, security audit data and data used to create a TCP display **shall[STARS-SSD-01235]** be recorded.

All alert and alarm data, including when the aural alarm is initiated and cancelled, **shall[STARS-SSD-01236]** be recorded.

Site identity, software version, adaptation version, and record start/end time **shall[STARS-SSD-01237]** be recorded.

Results of Periodic Background, Verification and Registration and Collimation testing and calculations **shall[STARS-SSD-01238]** be recorded.

All FDIO data received, Ghost data block information and TPA/ATPA cones, rings, warnings, alerts and In-trail separation minimum data **shall[STARS-SSD-01239]** be recorded.

3.2.1.1.16.8 CDR Media Status
The CDR Subsystem **shall[STARS-SSD-01240]** monitor and report storage capacity status when capacity reaches 90% and when 95% is reached begin to delete the oldest recorded data in order to allow current data to be recorded.

3.2.1.1.17 TCW/TDW Replay
The system **shall[STARS-SSD-01241]** permit record and replay activities to occur simultaneously.

Recorded data **shall[STARS-SSD-01242]** be used to reconstitute a selected TCW/TDW display for a specified period of time at the recorded speed.

MCP input **shall[STARS-SSD-01243]** be capable of selecting start, stop and position to replay data to as well as initiating the replay.

TCP input **shall[STARS-SSD-01244]** be capable of freezing and reinitiating a replay.

3.2.1.1.18 Full Service Security

3.2.1.1.18.1 Identification and Authentication

3.2.1.1.18.1.1 Local Operators

The system **shall[STARS-SSD-01245]** provide the capability to activate the Identification and Authentication security service for ATC functions or if not activated provide ATC and non-ATC functions without either.

Maintenance access **shall[STARS-SSD-01246]** be available only upon Identification and Authentication of the operator.

When the Identification and Authentication security service is active, the operator **shall[STARS-SSD-01247]** be identified and authenticated by a user name of at least 6 characters with automatic lockout compliant with FAA Order 1372A.

The complexity and duration between changes in authentication information **shall[STARS-SSD-01248]** be in compliance with FAA Order 130.121, with a configurable time parameter enforced between such changes.

Authentication information **shall[STARS-SSD-01249]** be modifiable by operators.

Previously authenticated operators **shall[STARS-SSD-01250]** be automatically authenticated upon completion of recovery from a warmstart or workstation failure with the exception of MCP and GPW positions.

The security warning banner **shall[STARS-SSD-01251]** be presented, until acknowledged, always at an MCP and if activated at a TCW/TDW following successful authentication.

The security warning banner **shall[STARS-SSD-01252]** be presented to an operator logging in to a TAS computer (other than TCW/TDW/MCP) or TAS network device that supports the capability.

3.2.1.1.18.1.3 Authenticate External Computers

External computer systems that interface to the STARS automation subsystem **shall[STARS-SSD-01253]** identify and authenticate with the exception of the following interfaces:

a. En Route Surveillance Radar/STARS ICD (NAS-IC-34132105)
b. Airport Surveillance Radar Model 9 (ASR9)/Standard Terminal Automation Replacement System (STARS) ICD (NAS-IC-34032105)
c. Airport Surveillance Radar Model 11 (ASR-11) to Standard Terminal Automation Replacement System (STARS) ICD (NAS-IC-34112105)
d. Standard Terminal Automation Replacement System (STARS) / Traffic Flow Management System (TFMS) ICD (NAS-IC-21052414)
e. STARS to ARTCC for IFDT ICD (NAS-IC-21058100)
f. ABPE (Digital Altimeter Setting Indicator (DASI) To Terminal Automation Systems ICD (NAS-IC-82150001-01))

g. Airport Surface Detection Equipment - Model X (ASDE-X) Multilateration Surveillance Data To Air Traffic Control (ATC) User Subsystem (NAS-IC-34180001-01)
h. FDIO Software ICD (NAS-MD-581) (STARS LITE only)
i. ASR-11 Radar and the Data Translation Equipment ICD (G710561)
j. Surveillance and Broadcast Services (SBS) Service Delivery Point (SDP) to ATC Automation and Service Monitoring User Subsystems ICD (NAS-IC-82530001-01)
k. STARS to APEX for IFDT Outside the US ICD (H372347)

The system **shall[STARS-SSD-01254]** provide the capability to change the external computer identification and authentication data.

3.2.1.1.18.1.4 Protection of Account Passwords
All electronically stored passwords and PINs **shall[STARS-SSD-01255]** be protected using FAA-approved hardware or software tools that are FIPS 140-2 compliant, in accordance with FAA Order 1370.103 and protected from disclosure during network transmission.

3.2.1.1.18.2 Access Control

3.2.1.1.18.2.1 Operators
Access **shall[STARS-SSD-01256]** be controlled between each security subject and object.

The system **shall[STARS-SSD-01257]** restrict maintenance of operator passwords and allowed functionality to an authorized operator.

Password access **shall[STARS-SSD-01258]** be required for an operator to execute system control commands.

3.2.1.1.18.2.2 Operator Classes
The operator classes assigned to operators **shall[STARS-SSD-01259]** provide the capability of controlling access to functionality for each user.

A minimum of nine operator classes, the name, and the functionality of each **shall[STARS-SSD-01260]** be adaptable.

The system **shall[STARS-SSD-01261]** be capable of assigning multiple operator classes to each operator.

3.2.1.1.18.2.3 External Systems
The system **shall[STARS-SSD-01262]** validate the source of external data on entry into the STARS automation subsystem with the exception of the following interfaces:
a. En Route Surveillance Radar/STARS ICD (NAS-IC-34132105)
b. Airport Surveillance Radar Model 9 (ASR9)/Standard Terminal Automation Replacement System (STARS) ICD (NAS-IC-34032105)
c. Airport Surveillance Radar Model 11 (ASR-11) to Standard Terminal Automation Replacement System (STARS) ICD (NAS-IC-34112105)

d. Standard Terminal Automation Replacement System (STARS) / Traffic Flow Management System (TFMS) ICD (NAS-IC-21052414)
e. STARS to ARTCC for IFDT ICD (NAS-IC-21058100)
f. ABPE (Digital Altimeter Setting Indicator (DASI) To Terminal Automation Systems ICD (NAS-IC-82150001-01))
g. Airport Surface Detection Equipment - Model X (ASDE-X) Multilateration Surveillance Data To Air Traffic Control (ATC) User Subsystem (NAS-IC-34180001-01)
h. FDIO Software ICD (NAS-MD-581) (STARS LITE only)
i. ASR-11 Radar and the Data Translation Equipment ICD (G710561)
j. Surveillance and Broadcast Services (SBS) Service Delivery Point (SDP) to ATC Automation and Service Monitoring User Subsystems ICD (NAS-IC-82530001-01)
k. STARS to APEX for IFDT Outside the US ICD (H372347)

Packet filtering **shall[STARS-SSD-01263]** be performed for selectable external interfaces.

Packet validation **shall[STARS-SSD-01264]** be performed on the following attributes: packet source, packet destination, protocol type, protocol service, communication line/port, time of day, and day of week.

3.2.1.1.18.3 Security Integrity
The correct operation of system security elements **shall[STARS-SSD-01265]** be validated.

Message integrity checking **shall[STARS-SSD-01266]** be applied to verify security and mission critical objects with operators notified of anomalies.

3.2.1.1.18.4 Security Audit
A security audit trail **shall[STARS-SSD-01267]** be created/maintained for all security audit events, show traceability to the operator on the STARS system or any external system, and protect the trail from unauthorized modifications/access or destruction.

The following security relevant events **shall[STARS-SSD-01268]** be audited, with specific events selected per operator:
a. Operator identification and authentication attempts
b. External interface identification and authentication attempts
c. Access attempts to security and mission critical objects
d. External inter-process communications failures
e. System administrator and security officer actions
f. Security integrity anomalies

When connected to the FAA Telecommunications Infrastructure (FTI) NAS Operational (OPIP) Network, STARS **shall[STARS-SSD-01269]** integrate with the NAS Cyber Management System (NCMS) to support the NAS Cyber Operations (NCO) enterprise security event monitoring and detection capability, in accordance with FAA Order 1370.114 and FAA Notice 1370.46.

The following security relevant audit events **shall[STARS-SSD-01270]** always be audited:
a. Unsuccessful operator and external interface identification and authentication attempts

b. System administration and security officer actions
c. Security integrity anomalies

The information to be recorded with each security and operator identification/authentication audit record **shall[STARS-SSD-01271]** be: operator ID, operator class, date, time, event type, security object, success/failure status and workstation, if applicable.

Audit reports **shall[STARS-SSD-01272]** be viewable at the MCP in electronic media capable of being printed.

Data Reduction and Analysis (DR&A) Extraction software **shall[STARS-SSD-01273]** provide a security data class filter on date and time in a spreadsheet format.

The system **shall[STARS-SSD-01274]** notify the M&C operator and the NAS Cyber Monitoring System (NCMS) upon the occurrence of an adaptable subset or all, respectively, security audit events.

The system **shall[STARS-SSD-01275]** retain security audit event records in online storage from a configurable amount of previous days up to the current day.

The system **shall[STARS-SSD-01276]** provide the capability to copy selected security audit event records to removable, portable media.

The system **shall[STARS-SSD-01277]** send security audit events generated by its edge network equipment to a configurable external address via the FTI OPIP network interface.

3.2.1.1.18.5 Security Administration
Security administration **shall[STARS-SSD-01278]** include the management of operator accounts, selection of security events to be audited per operator, generation of security audit reports and controlling integrity validation.

Security administration **shall[STARS-SSD-01279]** control access between each security subject and each security object by the management of operator access controls and operator classes.

An operating system or network equipment baseline configuration **shall[STARS-SSD-01280]** be collected, a comparison performed and report generated of selected equipment upon operator request.

3.2.1.1.19 Independent Time Source
The STARS system **shall[STARS-SSD-01281]** accept data from and be synchronized to a single Independent GPS Time Source in accordance with an approved ICD.

3.2.1.1.20 MCP Data Entry
The display of the service level indication of "unavailable" at TCPs **shall[STARS-SSD-01282]** be enabled/disabled by MCP input.

All monitor, control and support functions, and associated data, **shall[STARS-SSD-01283]** be accepted at any MCP.

The STARS system **shall[STARS-SSD-01284]** provide the option to select the data sampling and summarization interval at an MCP where the data will be displayed or made available for printing.

MCP input **shall[STARS-SSD-01285]** allow for the switch between Normal and Test modes independently for FSL and EFSL/ESL.

3.2.1.1.21 MCP Data Display

The system state and time of either FSL or EFSL service level **shall[STARS-SSD-01286]** be displayed at all MCPs associated with that respective service level.

The list of selectable MCP functions and their associated enable/disable selection as well as the status of resources for either FSL or EFSL **shall[STARS-SSD-01287]** be displayed at their respective MCPs.

A graphical view of resources monitored and an indication of progress for any requested function, updated at least every 5 seconds, **shall[STARS-SSD-01288]** be presented at either the FSL or EFSL MCPs.

All FSL or EFSL notifications **shall[STARS-SSD-01289]** be displayed at the MCP, recorded in CDR and provide for the most recent 3000 to still viewable by their respective service level.

When requested, the MCP **shall[STARS-SSD-01290]** display the input/output data associated with the system M&C and support functions for its respective service level.

All IFDT messages, with the most recent 3000 still viewable, **shall[STARS-SSD-01291]** be displayed at the MCP, with a text reason provided for any incoming rejected message and the ability to select and save specific messages.

The STARS system, upon keyboard entry, **shall[STARS-SSD-01292]** create a printable file for the following functions:

a. System messages associated with resource status changes
b. Performance Monitoring reports
c. System messages associated with control actions
d. Results of On or Off-line diagnostic tests
e. Results of Resource and Performance Verification tests
f. Security Audit logs

Data associated with ATC operational events, including the enable/disable of functions for the entire system or a terminal area **shall[STARS-SSD-01293]** be made available at the MCP for display or print.

Notification of each CRDA enable/disable action **shall[STARS-SSD-01294]** be made available for display or print at the MCP, including the source and type of action.

3.2.1.1.22 Application Interface Gateway

The AIG **shall[STARS-SSD-01295]** provide independent, communication pathways between the STARS automation subsystem and up to the number of external systems as specified in Table 3.2.1.1.23-1.

3.2.1.1.23 FS Performance

FSL performance will conform to the following response times while operating with the defined workload while maintaining the resource reserves specified in Computer Resources**.**

3.2.1.1.23.1 FS TAS Workload and Capacity

The FS TAS **shall[STARS-SSD-01296]** process the workload specified in the following tables:

Table 3.2.1.1.23-1 FS System Workload, Sources and Destinations of Data

Source	FS-2A		
	G1/G2	**G4**	**ELITE**
Surveillance Sensors	16	16	16[10]
Long-Range Sensors (serial interface)	4	4	4
Short-Range Sensors (serial interface)	10	10	10
Short-Range Sensors (IP interface)	1	1	1
Other Sensors[9] (IP interface)	1	1	1
ARTCC Interfaces	1	1	1
Handoff Facilities[1]	19	19	19
Adjacent TRACON Facilities[2]	10	10	10
HNH Handoff Facilities[3]	8	8	8
TFMS Interfaces	1	1	1
Maximum total of TCWs and TDWs	50/128	50/160	11/38
Number of Keyboards	126/234	126/480	16/100
Number of TDWs	24/41	24/68	6/17[11]
Number of Remote Locations	6/31	6/31	2/6
TCWs/TDWs per Remote Location	16	8/16	2/5
Number of Local Towers[4]	1	1	1
TDWs per Local Tower	7/16	7/16	3/6[11]
Number of TCWs	26/92	26/92	5/24
AIG One-Way (from STARS) Interfaces[5]	2	2	2
AIG Two-Way Interfaces[6]	2	2	2
AIG LAN Interfaces[7]	4	4	4
AIG ABPE Interfaces[8]	-	12/16	12/16

1. The specified number of Handoff Facilities represents the overall total number of facilities with which the STARS TRACON/RAPCON can exchange handoff messages. In all cases, communication is via the host ARTCC.
2. The specified number of Adjacent TRACON Facilities includes non-host (HNH) TRACONs/RAPCONs, as well as TRACONs/RAPCONs that belong to the host ARTCC.
3. The specified number of HNH Facilities represents the maximum number of non-host facilities. This number includes non-host (HNH) ARTCCs and non-host (HNH) TRACONs/RAPCONs.

4. Additional towers may be implemented locally, but exist within the STARS architecture as remote towers.
5. The number of interfaces is specified as 2, because the "One-way" data from STARS is sent on dual redundant LAN interfaces. Data is sent using multicast groups; this allows any number of external subsystems to receive the data.
6. The number represents the number of different dual redundant logical interfaces available for the exchange of "Two-way" data. The TBFM interface is included in this category.
7. This number represents the sum of the "One-way" and "Two-way" interfaces.
8. ABPE data is received via the AIG "One-way In" interfaces.
9. For FSL, "Other Sensors" will be interpreted either as additional short-range radars, or other sensor types such as multilateration (MLAT) or ADS-B, when available. In all cases, FSL workload will be measured while processing the required number of target reports per second.
10. Per contract, the productized ELITE configuration supports up to 12 surveillance sensors - 4 long range sensors (serial interface), 6 short range sensors (serial interface), 2 other sensors (IP interface). 16 surveillance sensors are defined in this table for test commonality with the surveillance workload defined for the G4 configuration.
11. Number of TDW's and TDW's per Local Tower for ELITE were changed per Case File M2112-STARS-1026, NCP #36044. This was an editorial change only.

Table 3.2.1.1.23-2 FS System Workload, Airspace Definition

ITEM	FS-2A		
	G1/G2	G4	ELITE
Terminal Areas	1	1	1
Surveillance Coverage Area (nmi.)	512x512	512x512 / 2048x2048	512x512 / 2048x2048
Terminal Configuration Plans per Terminal Area	1/12	1/12	1/12
Terminal Fix Pairs	1100/2500	1100/5000	1100/2500
Airports[1]	64	128	64
Aural alarm control volume per airport[2]	2	2	2
Geographic Maps			
Lines per map (average)	1000	1000	1000
Symbols per map (average)	200	200	200
Arcs per map (average)	75	75	75
Circles per map (average)	75	75	75
Maps per facility	225	225	225
Saved Preference Sets			
Per ATC operator	32	32	32
Number of operators	1000	1000	1000
Total	32000	32000	32000

1. Airports which require Conflict Alert and/or Minimum Safe Altitude Warning functionality.
2. Average number of Control Volumes per 3.2.1.1.3.16 and 3.2.1.1.5.10

Table 3.2.1.1.23-3 FS System Workload, System Data Capacity[1]

ITEM	FS-2A		
	G1/G2	G4	ELITE

Unique Tracked Aircraft			
Associated[2]	110	600	600
Total	435	1350/3000[3]	1350[3]
Flight Plans[4]	733	733/1200	733/1200

1. Values listed are minima.
2. Average associated track life is 18 minutes.
3. At least 750 unassociated tracked aircraft should be demonstrated at some point during the scenario.
4. The current TCID numbering is limited to 1000 by the NAS IFDT interface. Any flight plans beyond this limit are therefore required to be local (i.e. non En-route) flight plans.

Table 3.2.1.1.23-3A STARS LITE System Workload, System Data Capacity

ITEM	FS-2
Unique Tracked Aircraft	270
Associated[1]	68
Unassociated	202
Flight Plans	270

1. Average associated track life is 18 minutes.

Table 3.2.1.1.23-4 FS System Workload, Input Message Rates

MESSAGE	FS-2A			Units
	G1/G2	G4	ELITE	
Surveillance Inputs				
Avg. Total # of target reports (aircraft)	1225	2145	2145	reports/sec
Avg. # of target reports from all LRRs	233	233	233	reports/sec
Largest # of target reports from any LRR	N/A	75	75	reports/sec
Avg. # of target reports from all SRRs	862	863	863	reports/sec
Largest # of target reports from any SRR	N/A	98	98	reports/sec
Avg. # of target reports from fast update Non-radar sensors	N/A	1050	1050	reports/sec
Primary reports not from Aircraft targets	926	926	926	reports/sec
Peak system target reports (aircraft & non-aircraft)	3900	3900	3900	reports/sec
Surveillance Weather Input				
WFMU or ARSR Weather (Avg.)[2]	15	15	15	msg./radar/sec
WFMU or ARSR Weather (Avg.)[2]	80	80	80	msg./radar/scan
WFMU or ARSR Weather (Avg.)[2]	300	300	300	msg./radar/cycle[3]
ARSR Weather (Peak)[2]	75	75	75	msg./radar/sec
ARSR Weather (Peak)[2]	360	360	360	msg./radar/scan
ARSR Weather (Peak)[2]	1300	1300	1300	msg./radar/cycle[3]
ASR (Peak)	17	17	17	msg./radar/sec
Manually Entered Messages				
Combined peak rate of all messages	6	27	6	msg. per peak sec
Track Control Messages[1]				
Track Initiate Control	55	300	55	msg./hour
Track Terminate Control	340	1855	340	msg./hour
Handoff Initiate Transfer	638	3480	638	msg./hour
Handoff Accept Transfer	550	3005	550	msg./hour

MESSAGE	FS-2A			Units
	G1/G2	G4	ELITE	
Flight Plan Entry	61	335	61	msg./hour
Flight Plan Modification	65	355	65	msg./hour
Display Control Messages[1]				
Configuration	126	505	126	msg./hour
Relocate Data Area	61	335	61	msg./hour
Track Data Display	1395	7610	1395	msg./hour
Data Block Modification	346	1890	346	msg./hour
Other	63	345	63	msg./hour
System Messages[1]	9	50	9	msg./hour
Host Messages				
Track Data				
Initiate Transfer	200	200	200	msg./hour
Track Update	4072	4072	4072	msg./hour
Accept/Recall Transfer	209	209	209	msg./hour
Flight Plan Data				
Flight Plan	462	462	462	msg./hour
Amendment	194	194	194	msg./hour
ABPE	-	540	540	msg./hour

1. Assume equal distribution of controlled aircraft across control positions with at least one position having 20 tracks under its control. Message rates do not specify the maximum rate for individual messages.
2. In computing aggregate load from multiple radars, assume one at the peak sensor rate and the balance at average sensor rate.
3. A cycle consists of the multiple scans required to convey complete 360 degree weather map information.

Table 3.2.1.1.23-5 FS System Workload, Output Message Rates

MESSAGE	FS-2A			Units
	G1/G2	G4	ELITE	
Transfer Data to ARTCC[2]				
Transfer Initiate	244	244	244	msg./hour
Track Update	7648	7648	7648	msg./hour
Transfer Accept	205	205	205	msg./hour
Departure	222	222	222	msg./hour
Terminate Beacon Code	407	407	407	msg./hour
Transfer Data to Tower Display[4]				
Data Block – 21 alphanumerics	35	35	35	data block/scan
Data Block – 15 alphanumerics	105	105	105	data block/scan
Target Symbols[3]	210	210	210	symbol/scan
Tabular Data Entries	400	400	400	msg./hour
Transfer Data to Traffic Management				
Track Update	6600	36000	36000	msg./hour
AIG Messages				
Multicast Track/Flight Plan Updates	29072	92045	92045	msg./hour

1. Message rates do not specify the maximum rate for individual messages.
2. ARTCC message rates are constrained by communications bandwidth. Hence FS-2A numbers are reduced from the FS-3 numbers, and are based on percentage increase in flight plan capacity between FS-2 and FS-2A.
3. Includes target symbols transferred to tower display as part of Data Block.
4. Data is to be calculated on a Per Display basis.

Table 3.2.1.1.23-6 FS System Workload, Single Sensor Peak Target Rates

Peaking Interval	Long Range Target Rate	Short Range Target Rate
90 degree quadrant	400	250
11.25 degree sector	N/A	50
1.2 degree wedge - LRR	20	
1.3 degree wedge - SRR		16

Note: Surveillance targets will not necessarily be distributed uniformly around each radar site.

The FS TAS **shall[STARS-SSD-01297]** accommodate individual capacities as specified in Tables above. In most cases, workload equals capacity and a single number appears in the table; both workload and capacity are verified in the same test. Where an individual capacity is greater than the workload, the tables use the notation: Workload/Capacity. In these cases, the "Workload" value is used for the workload test, while separate tests verify that each capacity is supported. These tables do not include all capacities; others are specified in individual requirements throughout Section 3.

Two MCWs for each service level **shall[STARS-SSD-01298]** support a total of up to five MCP displays, up to two of which can be on their respective local displays and the remaining MCP displays can be remoted to other workstations (e.g. GPW, Site Support Server (SSS), TCW).

3.2.1.1.23.2 Individual Data Display Workload

Each table in this section specifies the quantity of each display item that is required to be displayable by item. It is not required that all items be displayable simultaneously.

The TCW or TDW operating in FS mode **shall[STARS-SSD-01299]** display the individual data workload specified in the following table.

Table 3.2.1.1.23-7 FS Individual Data Display Workload

Display Item	TCW Item Count	TDW Item Count	Remarks
Data Block and Leader	100	60	21 alphanumerics each (avg.)
Data Block and Leader	200	120	15 alphanumerics each (avg.)
Data Block	100	60	1 alphanumerics each (avg.)
Data Block and Leader	50	30	5 alphanumerics each (avg.)
Data Block and Leader	300	180	13 alphanumerics each (avg.)
Radar Target Data			
Target Position Symbol (only)	450	270	No histories or TES
Target Position Symbol Outline	450	270	
Target Extent Symbol	700	420	
Target History Symbol (5 histories)	3500	2100	
Tabular Data (Entries)			
Arrival/Departure	26	16	15 alphanumerics per entry (avg.)
Tower	9	6	12 alphanumerics per entry (avg.)
Coast/Suspend	32	20	12 alphanumerics per entry (avg.)
MSAW/CA Warning Status	10	6	17 alphanumerics per entry (avg.)
VFR Flight Plan	10	6	13 alphanumerics per entry (avg.)

Display Item	TCW Item Count	TDW Item Count	Remarks
Run Down CA Zone Suppression Status Hospital	9 10 20	6 6 12	40 alphanumerics per entry (avg.) 8 alphanumerics per entry (avg.) 15 alphanumerics per entry (avg.)
System Data Display Alphanumerics per display area	400	240	14 entries per display
Range Rings	50	30	Circle, 2nmi. Inc. @100nmi. range
Geographic Map Lines	10000	10000	Lines
Geographic Map Symbols	2000	2000	Single symbol
Geographic Map Arcs	750	750	Single circular arc
Geographic Map Circles	750	750	Circles
Compass Rose	1	1	
Weather Areas	9000	9000	Non-overlapping rectangles, minimum 75% screen coverage
TSAS Data Slot Markers Trajectories Timeline	 70 9 6	 70 9 6	 Includes Slot speeds ETA and STA

Table 3.2.1.1.23-7A STARS LITE Individual Data Display Workload

Display Item	TDW Item Count	Remarks
Data Block and Leader	60	21 alphanumerics each (avg.)
Data Block and Leader	120	15 alphanumerics each (avg.)
Data Block	60	1 alphanumerics each (avg.)
Data Block and Leader	30	5 alphanumerics each (avg.)
Data Block and Leader	180	13 alphanumerics each (avg.)
Radar Target Data Target Position Symbol (only) Target Position Symbol Outline Target Extent Symbol Target History Symbol (5 histories)	 270 270 420 2100	 No histories or TES
Tabular Data (Entries) Arrival/Departure Coast/Suspend MSAW/CA Warning Status Hospital	 16 20 6 12	 15alphanumerics per entry (avg.) 12alphanumerics per entry (avg.) 17alphanumerics per entry (avg.) 15alphanumerics per entry (avg.)
System Data Display (alphanumeric per display area)	240	14 entries per display
Range Rings	30	Circle, 2nmi. Inc. @ 100nmi. range
Geographic Map Lines	10000	Lines
Geographic Map Symbols	2000	Single symbol
Geographic Map Arcs	750	Single circular arc
Geographic Map Circles	750	Circles
Compass Rose	1	
Weather Areas	5400	Non-overlapping rectangles, Minimum 75% screen coverage

3.2.1.1.23.3 Simultaneous Data Display Workload

Each table in this section specifies the quantity of each display item that is required to be displayable by item. It is not required that all items be displayable simultaneously.

The TCW or TDW operating in FS mode **shall[STARS-SSD-01300]** display the simultaneous data workload specified in the following table:

Table 3.2.1.1.23-8 FS Simultaneous Data Display Workload

Display Item	TCW Item Count	TDW Item Count	Remarks
Data Block and Leader	50	30	21 alphanumerics each (avg.)
Data Block and Leader	100	60	15 alphanumerics each (avg.)
Data Block	5	3	1 alphanumerics each (avg.)
Data Block and Leader	30	18	5 alphanumerics each (avg.)
Data Block and Leader	150	90	13 alphanumerics each (avg.)
Radar Target Data			
Target Position Symbol (only)	300	180	No histories or TES
Target Position Symbol Outline	300	180	
Target Extent Symbol	305	183	
Target History Symbol (3 histories)	915	549	
Tabular Data (Entries)			
Arrival/Departure	26	16	15 alphanumerics per entry (avg.)
Coast/Suspend	4	3	12 alphanumerics per entry (avg.)
MSAW/CA Warning Status	3	2	17 alphanumerics per entry (avg.)
System Data Display			
Alphanumerics per display area	102	62	9 entries per display
Range Rings	9	6	Circle, 5nmi. Inc. @45nmi. range
Geographic Map Lines	2000	2000	Lines
Geographic Map Symbols	400	400	Single symbol
Geographic Map Arcs	150	150	Single circular arc
Geographic Map Circles	150	150	Circles
Compass Rose	1	1	
Weather Areas	3100	1860	Non-overlapping rectangles, minimum 50% screen coverage

Table 3.2.1.1.23-8A STARS LITE Simultaneous Data Display Workload

Display Item	TDW Item Count	Remarks
Data Block and Leader	30	21 alphanumerics each (avg.)
Data Block and Leader	60	15 alphanumerics each (avg.)
Data Block	3	1 alphanumerics each (avg.)
Data Block and Leader	18	5 alphanumerics each (avg.)
Data Block and Leader	90	13 alphanumerics each (avg.)
Radar Target Data		
Target Position Symbol (only)	180	No histories or TES
Target Position Symbol Outline	180	
Target Extent Symbol	183	
Target History Symbol (3 histories)	549	
Tabular Data (Entries)		
Arrival/Departure	16	15alphanumerics per entry (avg.)
Coast/Suspend	3	

Display Item	TDW Item Count	Remarks
MSAW/CA Warning Status	2	12alphanumerics per entry (avg.) 17alphanumerics per entry (avg.)
System Data Display (alphanumeric per display area)	62	9 entries per display
Range Rings	6	Circle, 5nmi. Inc. @ 45nmi. range
Geographic Map Lines	2000	Lines
Geographic Map Symbols	400	Single symbol
Geographic Map Arcs	150	Single circular arc
Geographic Map Circles	150	Circles
Compass Rose	1	
Weather Areas	1860	Non-overlapping rectangles, Minimum 50% screen coverage

3.2.1.1.23.4 Response Times and Update Rates

3.2.1.1.23.4.1 Response Time and Update Rate Definitions

All response time and update rate requirements **shall[STARS-SSD-01301]** be defined as the values at the 95th percentile.

3.2.1.1.23.4.2 Alphanumeric Input Devices

At any workstation, the time from the input of a character to its display **shall[STARS-SSD-01302]** be less than or equal to 150 milliseconds, while operating with the defined workload tables and maintaining the resource reserves specified in Computer Resources.

3.2.1.1.23.4.3 Pointing Device Response Time

An indication that a pointing device was actuated or moved **shall[STARS-SSD-01303]** be provided at displays in 150 milliseconds or less after the device is actuated, while operating with the defined workload tables and maintaining the resource reserves specified in Computer Resources.

3.2.1.1.23.4.5 ATC Data Display

While operating with the defined workload tables and maintaining the resource reserves specified in Computer Resources, and not in fused-track display presentation view, the elapsed time, between receipt of target data by the automation subsystem and the display of target position and data block information, **shall[STARS-SSD-01304]** occur within:

a. 1.0 second for local positions (STARS)
b. 1.0 second, plus GFE communication delay, for remote positions
c. 1.2 second (STARS LITE)

3.2.1.1.23.4.7 Display of Single Site Event Notifications

Local display at the MCP of single-site event notification **shall[STARS-SSD-01305]** occur within 3 seconds of the occurrence of each event, while operating with the defined workload tables and maintaining the resource reserves specified in Computer Resources.

3.2.1.1.23.4.8 Display of Verification Report
Local display at the MCP of all verification result reports **shall[STARS-SSD-01306]** occur within 5 minutes of the completion of any verification test, while operating with the defined workload tables and maintaining the resource reserves specified in Computer Resources.

3.2.1.1.23.4.9 TCW Replay Initial Response
When a workstation replay is requested, it **shall[STARS-SSD-01307]** be available for display within five minutes of the request, while operating with the defined workload tables and maintaining the resource reserves specified in Computer Resources.

3.2.1.1.23.4.10 TCP Request Response Times
The functions requested by TCP input from a workstation **shall[STARS-SSD-01308]** be completed while operating with the defined workload tables and maintaining the resource reserves specified in Computer Resources and the results displayed as follows:

a. 1.2 seconds or less for local positions
b. 1.2 seconds or less, plus GFE communication delay, for remote positions

3.2.1.1.23.4.12 Interfacility Message Transmission
Automatic and manually initiated and responses to interfacility messages **shall[STARS-SSD-01309]** begin transmission within 1.2 seconds after the transmission request is initiated, while operating with the defined workload tables and maintaining the resource reserves specified in Computer Resources.

3.2.1.1.23.4.13 Processing Received Interfacility Messages
Processing and display required for interfacility messages **shall[STARS-SSD-01310]** be accomplished within 1.2 seconds of message receipt, while operating with the defined workload tables and maintaining the resource reserves specified in Computer Resources.

3.2.1.1.23.4.15 Performance Verification (PV) Response Time
PV **shall[STARS-SSD-01311]** be completed within 45 minutes of initiation, while operating with the defined workload tables and maintaining the resource reserves specified in Computer Resources.

3.2.1.1.23.4.16 Map Data Display Update Rate
The map data display update rate **shall[STARS-SSD-01312]** be 1000 lines, 200 symbols, 75 arcs and 75 circles per second, while operating with the defined workload tables and maintaining the resource reserves specified in Computer Resources.

3.2.1.1.23.4.17 Weather Map Update
Any change to the weather map **shall[STARS-SSD-01313]** be displayed at the TCP in 30 seconds or less, while operating with the defined workload tables and maintaining the resource reserves specified in Computer Resources.

3.2.1.1.23.4.18 Service Level Transitions
The change of display between FS and ES **shall[STARS-SSD-01314]** occur in 1 second or less after the change is initiated by a TCP, while operating with the defined workload tables and maintaining the resource reserves specified in Computer Resources.

3.2.1.1.23.4.19 Time for Switching Redundant Resources
Switching the resource state of redundant resources **shall[STARS-SSD-01315]** be accomplished in 5 seconds or less, while operating with the defined workload tables.

3.2.1.1.23.4.20 Switching Application Software
Switching the execution of one version of automation application software to another version **shall[STARS-SSD-01316]** take no more than 45 seconds, while operating with the defined workload tables.

3.2.1.1.23.4.21 Switching Adaptation Data
Switching from one site adaptation set to another **shall[STARS-SSD-01317]** take no more than 10 seconds, while operating with the defined workload tables.

3.2.1.1.23.4.22 Initialization to FSL
Initialization or restore/recovery from power failure to FSL **shall[STARS-SSD-01318]** be accomplished in 6 minutes or less, while operating with the defined workload tables.

3.2.1.1.23.4.24 Recovery Time to Current Service Level
From the time a redundant system resource fails, recovery to the service level in use at the time of the failure **shall[STARS-SSD-01319]** be accomplished in 5 seconds or less, while operating with the defined workload tables.

3.2.1.1.23.4.25 AIG Message Transmission
The transmission from STARS of System Track Data **shall[STARS-SSD-01320]** begin within 2.0 seconds of Multi-Radar Tracker output.

The transmission from STARS of a message containing a flight plan update **shall[STARS-SSD-01321]** begin within 2.0 seconds of the following:

a. Receipt of an external message causing a flight plan update
b. Command causing a flight update from a local workstation
c. Command causing a flight update from a remote workstation with the added GFE communication time taken into account.

The system **shall[STARS-SSD-01322]** make altimeter settings available to air traffic functions, verified by observation of the system status area or altimeter list, within 5 seconds of receipt at the ABPE interface.

3.2.1.1.23.4.26 Processing Received FDIO Messages
Processing and display required for FDIO messages **shall[STARS-SSD-01323]** be accomplished within 1.2 seconds of message receipt, while operating with the defined workload tables. (STARS LITE only)

3.2.1.1.23.5 Tracking and Safety Algorithm Performance

3.2.1.1.23.5.1 Displayed Target Position Accuracy

Excluding external surveillance errors, the displayed relative target position accuracy of single sensor slant range presentation or fused-track display of non-maneuvering targets, including all surveillance processing and display errors **shall[STARS-SSD-01324]** be within the greater of 0.125 nmi or 0.4% of range scale.

Positional quantization of displayed target position **shall[STARS-SSD-01325]** be less than 32 feet.

In FMA mode with ground range view selected, target reports having the same coordinates as the FMA map elements, **shall[STARS-SSD-01326]** be displayed such that the center of the displayed symbol is within 100 feet of the corresponding elements.

3.2.1.1.23.5.2 Tracking Performance

Tracking performance **shall[STARS-SSD-01327]** conform to the requirements and applicable Notes specified in the following tables:

Notes:

A. A track loss occurs when a track fails to correlate for 10 consecutive radar scans and at least one target report from the target to be tracked is available during this time.
B. Requirements assume a clutter-free environment and no beacon garble.
C. Requirements apply to the STARS displayed outputs.
D. Requirements apply to a tracker using inputs from one or multiple radars when the radar closest to the aircraft is a short-range radar.
E. Development Methodology for the Standard Terminal Automation Replacement System (STARS) Functional Performance Requirements includes descriptions of the scenarios.
F. Requirements apply to a tracker using inputs from one multilateration sensor.
G. Track swap opportunity and track swap probability are defined in Section 6.2.
H. The beacon and search environment indicates that beacon and search reports from a single target are merged.
I. The search only environment characterizes a beacon failure or non-beacon equipped aircraft.
J. The beacon only environment characterizes a radar failure.
K. Requirements apply to a tracker using inputs from one or multiple radars when the radar closest to the aircraft is a long-range radar.
L. Requirements apply to a tracker using inputs from one or multiple radars.
M. The Altitude Maneuver scenario contains 50 aircraft tracks which build and level off for the first 2 minutes. A random positive altitude velocity (within a range of 0 to +3000 ft/min) is applied for one minute, at which time altitude levels off for 1 minute. At four minutes, a random negative altitude velocity (within a range of 0 to -3000 ft/min) is applied for 1 minute, at which time altitude levels off for 1 minute. The 4 minute cycle of climb, level-off, descend, level-off repeats one more time. The scenario is terminated after 10 minutes.

Table 3.2.1.1.23-9 Long and Short Range Surveillance Sensor Characteristics

Long Range Radars	ATCRBS	Primary
Scan Time	10-12 seconds	10-12 seconds
False reports	Less than 1/scan	Less than 350/scan
Blip/Scan	95%	90%
Azimuth standard deviation	0.23 degrees	0.18degrees
Azimuth quantization	0.0879 degrees[2]	0.0879 degrees
Range standard deviation	0.12 nmi.	0.08 nmi.
Range quantization	0.125 nmi.	0.125 nmi.
Altitude standard deviation[1]	50 feet	-
Altitude quantization	100 feet	-
Maximum radar bias		
Range	0.5 nmi.	0.5 nmi.
Azimuth	0.176 degrees	0.176 degrees
Short Range Radars	**ATCRBS**	**Primary**
Scan Time	4-5 seconds	4-5 seconds
False reports	Less than 1/scan	Less than 350/scan
Blip/Scan	95%	90%
Azimuth standard deviation	0.23 degrees	0.18degrees
Azimuth quantization	0.0879 degrees[2]	0.0879 degrees
Range standard deviation	0.04 nmi.	0.04 nmi.
Range quantization	0.0156 nmi.	0.0156 nmi.
Altitude standard deviation[1]	50 feet	-
Altitude quantization	100 feet	-
Maximum radar bias		
Range	0.125 nmi	0.125 nmi.
Azimuth	0.176 degrees	0.176 degrees
Multilateration	**ATCRBS/Mode-S/ADS-B**	
Report interval[3]	0.7 +- 0.14 Sec./1.0 +- 0.2 Sec./0.5 +- 0.1 Sec.	
Percent false reports	0.02%	
Probability of detection	0.97	
Latitude standard deviation	40 feet	
Longitude standard deviation	40 feet	
Latitude quantization	$180/2^{31}$ degrees[4]	
Longitude quantization	$180/2^{31}$ degrees[4]	

1. Includes altitude quantization.
2. 0.066 degrees for Mode-S.
3. Position reports may contain Mode-C and 3A values up to 4 seconds old.
4. 0.06 feet at equator.

Table 3.2.1.1.23-10 Aircraft Motion Characteristics

Speed (knots)	20 to 700
Altitude Change Rate (feet/minute)	-6000 to +10,000
Acceleration (g)	-1.5 to +3.8
Vertical Acceleration (g)	1/64 to 1/4

Table 3.2.1.1.23-11 Track Loss Probability, Short Range Radar Inputs

Environment/Maneuver	Track Loss Probability (%)

Discrete beacon/any[1]	0
Non-discrete beacon and search/straight and level[2]	1.1
Non-discrete beacon or search/turning[3]	14.9

1. Any aircraft motion conforming to the characteristics in Table 3.2.1.1.23-10.
2. Any aircraft speeds conforming to the speed characteristics in Table 3.2.1.1.23-10.
3. 400 knot aircraft turning 180° at 2°/sec at an average range of 42 nmi.

Notes 1,2,3,4 & 5 above apply.

Table 3.2.1.1.23-11A Track Loss Probability, Multilateration Inputs

Environment/Maneuver	Track Loss Probability (%)
Straight and level[1]	0
Turning[2]	0

1. 200 knot aircraft within multilateration coverage
2. 200 knot aircraft turning 30° at 3°/second within multilateration coverage

Notes 1,2,3 & 6 above apply.

Table 3.2.1.1.23-11B Target Acceleration, Multilateration Inputs

Step to Constant Aircraft Acceleration[1]	Maximum Velocity RMS Error[2]
0.5 meters/sec$^{(2)}$	8
5.0 meters/sec$^{(2)}$	32

1. Prior to step, acceleration is zero and tracker is in steady state. Along-track or cross-track, nominal 175 knot aircraft within multilateration coverage in accordance with sensor characteristics from Table 3.2.1.1.23-9
2. RMS averaged for 20 seconds after step over at least 100 independent tracks

Notes 2,3 & 6 above apply.

Table 3.2.1.1.23-12 Track Swap Probability, Short Range Radar Inputs

Mode	Swap Scenario[1]	Swap Probability (%)
Non-Discrete Code Track vs Non-Discrete Code Track (same code, no Mode C)	100 Knot Overtake	0
Non-Discrete Code Track vs Non-Discrete Code Track (same code, no Mode C)	30º Crossing	1.1
Non-Discrete Code Track vs Non-Discrete Code Track (same code, no Mode C)	Head-on Approach	0
Search Track vs Search Track	100 Knot Overtake	0
Search Track vs Search Track	30º Crossing	1.1
Search Track vs Search Track	Head-on Approach	0

Discrete Code Track vs Discrete Code (different code) Track[2]	Any	0
Discrete Code Track vs Non-Discrete Code Track[2]	Any	0
Non-Discrete Code Track (no Mode C) vs Search Track	Any	0
Non-Discrete Code Track (no Mode C) vs Search Target	Any	0

1. Aircraft speeds are 300 and 400 knots for 100 knot overtake, 300 knots for 30° crossing, and 200 knots for head-on approach.
2. Includes beacon garble.

Notes 2,3,4,5 & 7 above apply.

Table 3.2.1.1.23-13 Steady State Position Accuracy, Short Range Radar Inputs

Sensor	Speed (knots)	Range (nmi.)	Straight-Line Radial Mean Position Error (nmi.)
Beacon Only, Search Only and Beacon & Search	100	40 - 50	0.10
Beacon Only, Search Only and Beacon & Search	250	30 - 50	0.10
Beacon Only, Search Only and Beacon & Search	400	20 - 50	0.10

Notes 2,3,4,5,8,9 & 10 above apply.

Table 3.2.1.1.23-14 Steady State Position Accuracy, Long Range Radar Inputs

Sensor	Speed (knots)	Range (nmi.)	Straight-Line Radial Mean Position Deviation[1] (nmi.)
Beacon & Search	100	60	0.33
Beacon & Search	250	60	0.33
Beacon & Search	400	60	0.33

1. The range standard deviation is 0.125 nmi. and the azimuth standard deviation is 2.5 ACP. The blip-scan ratio is unity.

Notes 2,3,8 & 11 above apply.

Table 3.2.1.1.23-15 Steady State Speed Stability, Short Range Radar Inputs

Sensor	Speed (knots)	Range (nmi.)	Straight-Line Radial Scan-to-Scan Speed Change[1] (%)	
			0 knots	> 10 knots
Beacon & Search	100	40 - 50	70	0.91
Beacon & Search	250	30 - 50	74	0.11
Beacon & Search	400	20 - 50	73	0.53

1. Speed is assumed to be displayed in units of 10 knots.

Notes 2,3,4,5 & 8 above apply.

Table 3.2.1.1.23-16 Transient Speed Stability, Short Range Radar Inputs

Sensor	Speed (knots)	Range (nmi.)	Turn rate (deg./sec)	Turn (deg.)	Turning Scan-to-Scan Speed Change Stability[1] (%)	
					0 – 10 knots	> 10 knots
Beacon & Search	100	36 - 48	3	180	95	5
Beacon & Search	250	36 - 48	2	180	94	6
Beacon & Search	400	36 - 48	2	180	90	10

1. Speed is assumed to be displayed in units of 10 knots.

Notes 2,3,4,5 & 8 above apply.

Table 3.2.1.1.23-17 Steady State Speed Accuracy, Short and Long Range Radar Inputs

Sensor	Speed (knots)	Range (nmi.)	Straight-Line Tangential RMS Speed Error (knots)
Search Only and Beacon & Search	100	36 - 48	11
Search Only and Beacon & Search	250	36 - 48	10
Search Only and Beacon & Search	400	36 - 48	10

Notes 2,3,4,5,8 & 9 above apply.

Table 3.2.1.1.23-18 Steady State Heading Accuracy, Short and Long Range Radar Inputs

Sensor	Speed (knots)	Range (nmi.)	Straight-Line Radial RMS Heading Error (degrees)
Beacon & Search	100	40 - 50	12
Beacon & Search	250	30 - 50	6
Beacon & Search	400	20 - 50	3

Notes 2,3,5,8 & 12 above apply.

Table 3.2.1.1.23-19 Transient Track Position, Speed and Heading Accuracy, Short Range Radar Inputs

Sensor	Speed (knots)	Range (nmi.)	180-Degree Turn, Short-Range Peak RMS Error[1]		
			Position (nmi.)	Speed (knots)	Heading (degrees)
Beacon & Search	100	36 - 48	0.3	33	51
Beacon & Search	250	36 - 48	0.4	25	30
Beacon & Search	400	36 - 48	0.4	38	31

1. Active, updating tracks only.

Notes 2,3,4,5 & 8 above apply.

Table 3.2.1.1.23-20 Time to Establish Steady-State Tracking, Short Range Radar Inputs

Sensor	Speed (knots)	Range (nmi.)	Time to Establish Steady-State Tracking[1] (scans)		
			Position	Speed	Heading
Beacon & Search	100	36 - 48	6	11	5
Beacon & Search	250	36 - 48	9	12	8
Beacon & Search	400	36 - 48	10	15	10

1. Time required to establish steady-state tracking after completion of a 180° turn. Requirements include active, updating tracks only.

Notes 2,3,4,5 & 8 above apply.

Table 3.2.1.1.23-21 Altitude Tracker

Scenario	RMS Error
Altitude Maneuver	560 ft/min

Note 13 above applies.

3.2.1.1.23.5.3 Conflict Alert Performance

Conflict Alert performance **shall[STARS-SSD-01328]** conform to the requirements specified in Table 3.2.1.1.23-22, with a nuisance alert rate of less than or equal to 6%, using surveillance sensor inputs with the characteristics specified in Table 3.2.1.1.23-9.

Table 3.2.1.1.23-22 Conflict Alert Rate of Detection Requirements

Traffic/Warning Requirement	Probability/Rate of Detection (%)
Warning time >30 Sec. with steady-state tracks	70
Warning time >0 Sec. with steady-state tracks	96
Warning time >30 Sec. with realistic traffic mix	59
Warning time >0 Sec. with realistic traffic mix	90

Note:

1. Requirements are based on encounter situations and scenarios defined in Development Methodology for the Standard Terminal Automation Replacement System (STARS) Functional Performance Requirements as modified per Raytheon memorandum JDS:99:01, as attached to ECP STARS-007.

The system **shall[STARS-SSD-01329]** meet CA performance requirements for up to 100 simultaneous conflict situations.

3.2.1.1.23.5.4 Final Monitor Aid (FMA) Performance

3.2.1.1.23.5.4.1 Runways per AMZ

FMA mode **shall[STARS-SSD-01330]** support simultaneous approach operations on two to four parallel runways in the selected AMZ.

3.2.1.1.23.5.4.2 Aircraft per Active AMZ

FMA mode **shall[STARS-SSD-01331]** support approach operations for up to 150 associated aircraft in the selected AMZ, subject to the limitation on unique associated tracked aircraft expressed in Table 3.2.1.1.23-3.

3.2.1.1.23.5.4.3 Tracked Target Deviations

FMA mode **shall[STARS-SSD-01332]** support detection of target deviations of 100 feet in range or in azimuth within 10.7 nmi of the selected radar, as determined by observation of displayed target position relative to the reference lines specified in 3.2.1.1.4.1.

FMA mode, when a multilateration sensor has been selected and in ground range view, **shall[STARS-SSD-01333]** support detection of a change in target position of 100 feet within the specified sensor coverage volume, as determined by observation of displayed target position relative to a fixed location on the display.

3.2.1.1.23.5.4.4 Voice Alert Response Time

The audio signal associated with FMA Voice Alerts driving the speaker at the TCW **shall[STARS-SSD-01334]** occur within 200 milliseconds after the alert becomes active.

3.2.1.1.23.5.4.5 Alert Activation Time

A visual Caution or Warning alert resulting from a track entering an NTZ **shall[STARS-SSD-01335]** be displayed within 100 milliseconds of the track display position update.

3.2.1.1.23.5.4.6 Display Mode Transition

The change of display to FMA mode **shall[STARS-SSD-01336]** occur in one minute or less, while operating with the defined workload tables (excluding flight data) and maintaining the resource reserves specified in Computer Resources.

3.2.1.1.23.5.5 MSAW Performance

Minimum Safe Altitude Warning performance **shall[STARS-SSD-01337]** conform to the requirements specified in the following table with a nuisance alert rate of less than or equal to 4%, using surveillance sensor inputs with the characteristics specified in Table 3.2.1.1.23-9.

Table 3.2.1.1.23-23 Minimum Safe Altitude Warning Rate of Detection Requirements

Traffic/Warning Requirement	Probability/Rate of Detection (%)
Warning time >30 Sec. with realistic traffic mix	45
Warning time >0 Sec. with realistic traffic mix	94

Note:

1. Requirements are based on encounter situations and scenarios defined in Development Methodology for the Standard Terminal Automation Replacement System (STARS) Functional Performance Requirements as modified per Raytheon memorandum JDS:99:01, as attached to ECP STARS-007.

3.2.1.1.23.5.6 CRDA Performance
CRDA **shall[STARS-SSD-01338]** operate on a total of 32 applications for an airport.

3.2.1.1.23.5.7 Time Synchronization Accuracy
The time associated with all recorded data **shall[STARS-SSD-01339]** be synchronized to within 100 msec of the ITS time.

3.2.1.1.23.5.8 ATPA Performance
TCP input to disable ATPA system-wide, disable ATPA Approach Volume system-wide, inhibit the display of ATPA Warning and Alert Cones for a display or a single track, inhibit the display of ATPA Monitor cones, or inhibit the display of In-Trail Distance **shall[STARS-SSD-01340]** take effect without waiting for the track(s) to be updated.

3.2.1.2 Emergency Service
The Emergency Service Level provides a reliable, minimal function, backup air traffic control functionality in the event the STARS Full Service Level is unavailable at STARS Operational G1/G2 Sites. ESL is intended as a simple and reliable service level that provides the same service as the existing analog radars at existing TRACON sites.

The ESL provides the air traffic controller with surveillance position information, aircraft beacon code, filters, altitude, maps, range marks, weather information, and sensor identification. The ESL provides maintenance personnel with capabilities to monitor ESL integrity, and control capabilities for performing hardware re-configuration, software downloading, resource verification, system startup and shutdown, and system testing.

3.2.1.2.1 ATC Surveillance

3.2.1.2.1.1 Multiple Surveillance Sources
Aircraft position, weather, test, and status data **shall[STARS-SSD-01341]** be accepted simultaneously from multiple surveillance systems.

3.2.1.2.1.2 Redundant Interfaces
Surveillance data **shall[STARS-SSD-01342]** be accepted by both a primary interface and an identical backup automation system interface.

ESL Surveillance data **shall[STARS-SSD-01343]** be automatically selected from either the primary interface or the identical backup interface for each surveillance system.

3.2.1.2.1.3 Target Types
Beacon and search target data **shall[STARS-SSD-01344]** be accepted.

3.2.1.2.1.4 Mode C Altitude Pressure Correction
The corrected altitude (A) in units of 100 feet **shall[STARS-SSD-01345]** be calculated using the formula

$A = Ar - Round[\Delta B*(9.25+0.13*\Delta B)]$ where

Ar is the received altitude in units of 100 feet,

Round is the rounding function as follows:
Round (±N.ddd) = ±N if 0.ddd < 0. 5
Round (±N.ddd) = ±N±1 if 0.ddd ≥ 0. 5 and

$\Delta B = [(29.92) - (\text{Altimeter setting})]$ where units are in inches of mercury.

Validated Mode C altitude in beacon target reports below a transition altitude **shall[STARS-SSD-01346]** be corrected for barometric variations from the standard mean sea level pressure of 29.92 inches of mercury.

The transition altitude **shall[STARS-SSD-01347]** be determined using an adaptable reference transition altitude, the altimeter setting, and the following:

Altimeter Setting (inches of mercury)	Transition Altitude (feet)
0-27.91	Reference transition altitude + 2200
27.92-28.41	Reference transition altitude + 1700
28.42-28.91	Reference transition altitude + 1200
28.92-29.41	Reference transition altitude + 700
29.42-29.91	Reference transition altitude + 200
>29.91	Reference transition altitude - 300

If use of the transition altitude table is adapted, the transition altitude **shall[STARS-SSD-01348]** be determined using an adaptable reference transition altitude, the altimeter setting, and the following:

Altimeter Setting (inches of mercury)	(millibars)	Transition Altitude (feet)
0-27.91	0-945	Reference transition altitude + 2200
27.92-28.41	946-962	Reference transition altitude + 1700
28.42-28.91	963-979	Reference transition altitude + 1200
28.92-29.41	980-996	Reference transition altitude + 700
29.42-29.91	997-1013	Reference transition altitude + 200
>29.91	>1013	Reference transition altitude - 300

If use of the transition altitude formula is adapted, the transition altitude (At) in units of 100 feet **shall[STARS-SSD-01349]** be calculated using an adaptable reference transition altitude (Aref), the altimeter setting, and the formula:

$At = Aref + Round[\Delta B*(9.25+0.13*\Delta B)]$ where

Aref is the adaptable reference transition altitude in units of 100 feet,

Round is the rounding function as follows:
Round (±N.ddd) = ±N if 0.ddd < 0. 5
Round (±N.ddd) = ±N±1 if 0.ddd ≥ 0. 5 and

ΔB = [(29.92) - (Altimeter setting)] where units are in inches of mercury.

3.2.1.2.1.5 Weather Messages and Mapping
Weather data **shall[STARS-SSD-01350]** be made available for display.

The ASR and ARSR weather levels **shall[STARS-SSD-01351]** be mapped to the displayable weather levels according to the following table:

Mapping of ASR/ARSR Weather to Displayable Weather Levels		
Displayable Level	**ASR Level**	**ARSR Level**
1 (Light)	1	---
2 (Moderate)	2	Light
3 (Heavy)	3	Light/Medium
4 (Heavy)	4	Medium
5 (Extreme)	5	Medium/Heavy
6 (Extreme)	6	Heavy

ARSR reporting of weather is configurable, at each radar, to account for:

a. Azimuth radial report spacing - high/low,
b. Reported reflectivity levels - 2 (Light, Heavy), 3 (Light, Medium, Heavy), 5 (Light, Light/Medium, Medium, Medium/Heavy, Heavy),
c. Scans per picture - 3 to 30.

When adapted for high azimuth spacing, ARSR weather picture extraction processing **shall[STARS-SSD-01352]** apply the angular values to radial reports listed in the following table:

High Azimuth Spacing Parameters		
Range Group nmi.	**Degrees**	**Fraction of Circle**
Min – 40	5.6	1/64
40 – 80	2.8	1/128
80 – 136	1.4	1/256
136 - 250	0.7	1/512

When adapted for low azimuth spacing, ARSR weather picture extraction processing **shall[STARS-SSD-01353]** apply the angular values to radial reports listed in the following table:

Low Azimuth Spacing Parameters

Range Group nmi.	Degrees	Fraction of Circle
Min – 40	2.8	1/128
40 – 80	1.4	1/256
80 – 136	0.7	1/512
136 - 250	0.35	1/1024

The system **shall[STARS-SSD-01354]** apply an aging time to weather reports from ARSR radars.

3.2.1.2.1.6 Strobe Messages
Beacon and search strobe data **shall[STARS-SSD-01355]** be accepted and discarded**.**

3.2.1.2.1.7 Real Time Quality Control (RTQC) Messages
Beacon and search RTQC messages including sector marks, if available, from all surveillance systems, **shall[STARS-SSD-01356]** be made available for system status monitoring at the MCP.

Beacon and search RTQC messages excluding sector marks **shall[STARS-SSD-01357]** be made available for display.

3.2.1.2.1.8 Status and Radar Identification Messages
Radar status messages and radar identification messages from all surveillance systems **shall[STARS-SSD-01358]** be made available for system status monitoring at the MCP.

3.2.1.2.1.9 Source Data for Pressure Correction
Source data for pressure corrections **shall[STARS-SSD-01359]** be the altimeter setting at the TCW/TDW.

3.2.1.2.1.10 Radar Quality Filtering
Uncorrelated search reports from an ASR-9 or an ASR-11 radar **shall[STARS-SSD-01360]** be discarded if they do not exceed the quality filter threshold (if any) adapted for that radar.

The quality filter threshold will be adapted as one of the following:

Adapted Filter Threshold	Search Reports Discarded (Search target Quality Field Bits)
A	0 0
B	0 0, 0 1
C	0 0, 0 1, 1 0
D	0 0, 0 1, 1 0, 1 1 (All search reports discarded)
Disabled	None

3.2.1.2.1.11 Radar Confidence Filtering
The confidence filter code will be adapted as one of the following:

Adapted Filter Code	Search Reports Discarded (Search target Confidence Field Bits)
A	0 0 0
B	0 0 1

C	0 1 0
D	0 1 1
E	1 0 0
F	1 0 1
Disabled	None

Uncorrelated search reports from an ASR-9 radar **shall[STARS-SSD-01361]** be discarded if they match the confidence filter code (if adapted) for that radar.

3.2.1.2.1.12 Permanent Echo Search Targets
Permanent echo search targets **shall[STARS-SSD-01362]** be detected and made available for display.

3.2.1.2.1.13 Parrot Targets
Fixed beacon transponder targets **shall[STARS-SSD-01363]** be detected and made available for display.

3.2.1.2.1.14 Test Targets
Test targets from surveillance systems **shall[STARS-SSD-01364]** be made available for display.

3.2.1.2.1.15 Force Invalid Mode-C
Reports from aircraft targets containing any valid Mode C value of -1000 ft or less **shall[STARS-SSD-01365]** be processed as if they contained an invalid Mode C value.

3.2.1.2.2 TCP Data Entry

3.2.1.2.2.1 Radar Selection at Local TDW
TCP input **shall[STARS-SSD-01366]** select the single radar source for display presentation at each local TDW from the digital surveillance interface.

3.2.1.2.2.2 Radar Selection at Remote TDW
TCP input at each remote TDW **shall[STARS-SSD-01367]** select the single radar source from either a direct radar interface or from the ESL automation subsystem interface for display.

3.2.1.2.2.3 Beacon Code Block Selection
TCP input **shall[STARS-SSD-01368]** select up to ten (10) beacon code blocks to be used at each TCW and TDW.

TCP input via keyboard command sequence [F7, B, code (00-77), Enter] or [M, F7, B, code (00-77), Enter] **shall[STARS-SSD-01369]** enter or delete, respectively, the specified codes from the Select Code List.

3.2.1.2.2.4 Altitude Filter
TCP input **shall[STARS-SSD-01370]** control the limits of the altitude filter at each TCW and TDW.

TCP input via keyboard command sequence [F7, F, unassociated track altitude limits (6 digits), {Space, associated track altitude limits (6 digits)}, Enter] **shall[STARS-SSD-01371]** enter Altitude Filter Limits.

ESL **shall[STARS-SSD-01372]** use the lowest of the low, and the highest of the high, altitude filter limits from the unassociated and associated limits.

TCP input via keyboard command sequence [F7, F, Enter] **shall[STARS-SSD-01373]** display the altitude filter readout in the Preview Area.

3.2.1.2.2.5 Range
TCP input **shall[STARS-SSD-01374]** select a display range from 6 nmi to the maximum coverage area without modifying character size or line width.

3.2.1.2.2.6 Barometric Pressure
TCP input **shall[STARS-SSD-01375]** specify the barometric setting for the TCW/TDW.

3.2.1.2.2.7 Uncorrelated Search Target Display Selection
TCP input **shall[STARS-SSD-01376]** select and inhibit the display of uncorrelated search targets.

TCP input **shall[STARS-SSD-01377]** select and inhibit the display of mapped uncorrelated search targets.

Selection of either uncorrelated search target display presentation **shall[STARS-SSD-01378]** cause deselection of the other.

3.2.1.2.2.8 Controlling System Status Area
TCP input via keyboard command sequence [F7, S, Slew, Enter] **shall[STARS-SSD-01379]** position the upper left corner of the System Status Area anywhere within the Radar Window.

3.2.1.2.2.9 Controlling Preview Area
TCP input via keyboard command sequence [F7, P, Slew, Enter] **shall[STARS-SSD-01380]** position the upper left corner of the Preview Area anywhere within the Radar Window.

At a minimum, four characters of any displayed preview area line **shall[STARS-SSD-01381]** be visible when the preview area is positioned near the right edge of the radar window.

At a minimum, three lines of any preview area data **shall[STARS-SSD-01382]** be visible when the preview area is positioned near the bottom edge of the radar window.

3.2.1.2.2.10 Altimeter Setting
TCP input via keyboard command sequence [F7, S, altimeter setting (2700-3200), Enter] **shall[STARS-SSD-01383]** enter altimeter setting, if inches of mercury pressure is adapted.

TCP input via keyboard command sequence [F7, S, altimeter setting (915-1083), Enter] **shall[STARS-SSD-01384]** enter altimeter setting, if millibar pressure is adapted.

3.2.1.2.2.11 Implied Readout
TCP input via keyboard command sequence [Slew, Enter] **shall[STARS-SSD-01385]** override the code and altitude filters and display code and altitude of the selected target.

The code and altitude of the selected target **shall[STARS-SSD-01386]** remain displayed for an adapted time interval of 1-30 seconds (default 5 seconds).

3.2.1.2.2.12 Cursor Control
There **shall[STARS-SSD-01387]** be one active cursor for each data entry set.

3.2.1.2.2.13 ACID
TCP input via keyboard command sequence [ACID, Slew, Enter] or [ACID, space, beacon code, Enter] **shall[STARS-SSD-01388]** associate an ACID with a discrete beacon code at the entering TCW/TDW. Code/call sign pairing information will not be transferred between workstations.

If an attempt is made to associate an ACID with a non-discrete beacon code, an error message **shall[STARS-SSD-01389]** be displayed in the Preview Area.

TCP input via keyboard command sequence [TRK DROP (F4), Slew, Enter] or [TRK DROP (F4), ACID, Enter] **shall[STARS-SSD-01390]** delete the ACID from the data block.

This action removes the association between the ACID and the discrete beacon code and results in the display of the beacon code in the data block if the filter criteria are satisfied.

If the discrete code is not received for an adaptable period of time, the ACID **shall[STARS-SSD-01391]** be deleted from storage.

If the ACID is not associated with a discrete code for an adaptable period of time, the ACID **shall[STARS-SSD-01392]** be deleted from storage. Code/call sign pairing information will not be transferred between workstations.

3.2.1.2.2.14 Beacon Code Readout
TCP input via keyboard command sequence [F7, B, Slew, and Enter] **shall[STARS-SSD-01393]** readout the beacon code in the Preview Area.

3.2.1.2.2.15 Beacon Code Readout All
TCP input via keyboard command sequence [F7, B, Enter] **shall[STARS-SSD-01394]** toggle the beacon readout all function.

TCP input via keyboard command sequence [F7, B, E, Enter] **shall[STARS-SSD-01395]** display the beacon codes for all targets.

TCP input via keyboard command sequence [F7, B, 1, Enter] **shall[STARS-SSD-01396]** disable the display of beacon codes for all targets.

3.2.1.2.3 TCP Data Display

3.2.1.2.3.1 Available Service Levels Indicated

The service levels available to be displayed at any TCP **shall[STARS-SSD-01397]** be indicated on the corresponding TCW or TDW.

Service Level Availability **shall[STARS-SSD-01398]** be derived from FSL/ESL status.

3.2.1.2.3.2 Radar Presentation

Radar presentation **shall[STARS-SSD-01399]** be single sensor slant range.

3.2.1.2.3.3 Radar Coordinates

All target data and map data **shall[STARS-SSD-01400]** be displayed in radar coordinates. This causes the target and map data to be scaled as a function of selected range.

3.2.1.2.3.4 Sensor Identification

The selected radar source **shall[STARS-SSD-01401]** be identified in ESL display.

3.2.1.2.3.5 Aircraft Information

The ACID **shall[STARS-SSD-01402]** be displayed in place of the discrete beacon code in the first line of the data block independent of both the select code filter and the altitude filter limits.

The ACID **shall[STARS-SSD-01403]** be displayed in the data block for all aircraft that are transponding the discrete code.

If an ACID is displayed in place of a discrete code and the discrete code is changed to a special condition code, as defined in 3.2.1.2.3.17, the ACID **shall[STARS-SSD-01404]** continue to be displayed.

When the applicable filter criteria are satisfied, target beacon code or ACID and altitude, barometric pressure corrected when less than the transition altitude, **shall[STARS-SSD-01405]** be displayed at the end of a target leader for targets reporting these values.

If a discrete code is changed to a special condition code and the ACID continues to be displayed, a special condition indicator **shall[STARS-SSD-01406]** be uniquely displayed above the ACID until the special condition code is no longer received from that aircraft.

3.2.1.2.3.6 Selected Beacon Codes Filtering

Aircraft information for targets with beacon codes that correspond to up to ten (10) beacon code blocks **shall[STARS-SSD-01407]** be displayed.

3.2.1.2.3.7 Altitude Filtering

Aircraft information for beacon code-selected targets that are between altitude filter limits **shall[STARS-SSD-01408]** be displayed.

3.2.1.2.3.8 Maps

A minimum of 50 digital maps associated with the radar source **shall[STARS-SSD-01409]** be displayed individually or simultaneously at the TCW and TDW as constrained by the geographic map capacities specified in the data display workload Table 3.2.1.2.10-7.

3.2.1.2.3.9 Lists and Tabular Data Display Coordinates

All lists and tabular data **shall[STARS-SSD-01410]** be displayed in display coordinates.

3.2.1.2.3.10 System Status Area

In ESL, all data fields **shall[STARS-SSD-01411]** be derived from ESL, including existing ESL time.

When a TCW or TDW is in ESL Training mode, ESL simulator time **shall[STARS-SSD-01412]** be displayed.

General Information, OPS Level, and Other data fields do not exist in ESL and **shall[STARS-SSD-01413]** be blank.

In ESL, data for the Attention field **shall[STARS-SSD-01414]** be derived from the selected radar.

A single System Status Area **shall[STARS-SSD-01415]** be displayed.

The size of the System Status Area **shall[STARS-SSD-01416]** be fixed for any given character size.

The System Status Area size **shall[STARS-SSD-01417]** automatically adjust if the character size is changed.

Data for the weather level status **shall[STARS-SSD-01418]** be derived from the radar currently selected at the TCW.

The Weather Level Status field **shall[STARS-SSD-01419]** display numbers in fixed horizontal positions corresponding to weather levels from which weather data is currently available and highlight with parentheses those letters that correspond to enabled weather levels.

Data for the ASR-9 Mode status **shall[STARS-SSD-01420]** be obtained from the radar currently selected at the TCW.

The System Status Area **shall[STARS-SSD-01421]** contain the following information fields:

a. Service Level Availability
b. ASR-9 mode ("Mode S" or "IBI") or blank per STARS-SSD-01422
c. Weather Level Status
d. Time (hhmm/ss)
e. Altimeter Setting (in millibars, if millibar pressure is adapted or in inches of mercury, if inches of mercury pressure is adapted)
f. Beacon Filter Select Codes (maximum of 5 group codes per line; up to 2 lines)

g. Attention (Special condition indication(s))

The system data **shall[STARS-SSD-01422]** display the ASR-9 Mode status only under all of the following conditions:

a. An ASR-9 Mode S radar is selected for display
b. Display of ASR-9 Mode status is enabled by adaptation for the terminal area.

The format of the System Status Area **shall[STARS-SSD-01423]** be as follows:

RED CHECK SERV LVL AVL ASR-9 MODE
WEATHER LVL STATUS
TIME ALTIMETER
BEACON FILTER CODES
ATTENTION

The system data **shall[STARS-SSD-01424]** display a single Red Check symbol consisting of a solid red inverted delta centered within a green outline box. The Red Check symbol cannot be turned off; presence of the red inverted delta verifies that the red electron gun (or equivalent mechanism in LCD displays) is working. The Red Check symbol has the same brightness and font size as the remainder of the system status area.

3.2.1.2.3.11 Leader Direction
The LDR DIR toggle button **shall[STARS-SSD-01425]** provide the capability to toggle the leader direction between North and Northeast directions.

3.2.1.2.3.12 Altitude Filter Limits
Upon TCP selection, the altitude filter limits **shall[STARS-SSD-01426]** be displayed.

3.2.1.2.3.13 Uncorrelated Search Target Display
Upon TCP selection, search targets reported as uncorrelated by the terminal radar **shall[STARS-SSD-01427]** be displayed.

No target histories **shall[STARS-SSD-01428]** be displayed for search targets reported as uncorrelated by the terminal radar.

3.2.1.2.3.14 Mapped Uncorrelated Search Target Display
Upon TCP selection, search targets reported as uncorrelated by the terminal radar **shall[STARS-SSD-01429]** be displayed only in adapted uncorrelated target map geographic areas.

3.2.1.2.3.15 Correlated Search Target Display
Correlated search target reports, if available from the radar, **shall[STARS-SSD-01430]** be displayed in all display areas, irrespective of the Uncorrelated Search Target Display Selection.

3.2.1.2.3.16 En Route Radar Search Target Display
All enroute radar search-only target reports **shall[STARS-SSD-01431]** be displayed, irrespective of the Uncorrelated Search Target Display Selection.

3.2.1.2.3.17 Standard Transponder Indicators
The TCW/TDW aural alarm **shall[STARS-SSD-01432]** sound when viewing data from a sensor that is reporting a special condition (EM, HJ or RF).

The data block **shall[STARS-SSD-01433]** uniquely indicate when an aircraft transponder is indicating the following conditions:

a. emergency [EM 7700]
b. hijack [HJ 7500]
c. radio failure [RF 7600]

3.2.1.2.3.18 PARROT, PE, RTQC and Test Targets
TCP input **shall[STARS-SSD-01434]** select and inhibit the display of parrots, permanent echoes, beacon and search RTQC targets, and surveillance systems search test targets on the entering TCW or TDW.

3.2.1.2.3.19 Preview Area
A separate Preview Area **shall[STARS-SSD-01435]** be provided for each data entry set active at a workstation.

The Preview Area **shall[STARS-SSD-01436]** display ESL data entry preview, readout, and feedback messages.

The size of the Preview Area **shall[STARS-SSD-01437]** be fixed for any given character size.

The size of the Preview Area **shall[STARS-SSD-01438]** automatically adjust if the character size is changed.

The Preview Area **shall[STARS-SSD-01439]** consist of a Readout Area (RA) and a Preview Display Area (PDA).

The format of the Preview Area **shall[STARS-SSD-01440]** be a two-line-readout area, followed by a data input area.

The Preview Area **shall[STARS-SSD-01441]** contain the following associated with the ESL preview function:

a. For the RA, data reflecting the results of a request from the keyboard or a trackball entry
b. For the PDA, prompts for the following DCB functions when the DCB button is initiated:
    1. Range
    2. Range Ring
    3. All brightness groups
    4. Leader Length
    5. Volume
    6. History
    7. Cursor Speed
    8. Maps submenu

9. Character Size
10. Site

3.2.1.2.3.20 Adapted Transponder Indicators
The data block **shall[STARS-SSD-01442]** uniquely indicate when an aircraft transponder is received reporting one of the adapted transponder indicators, based upon a corresponding set of up to twelve adapted aircraft beacon codes, including suspect aircraft (beacon code 1236).

The TCW and TDW aural alarm **shall[STARS-SSD-01443]** sound when data from a sensor that is reporting an adapted transponder indicator is displayed and when the aural alarm is enabled by adaptation for that transponder indicator.

3.2.1.2.4 Status Monitoring

3.2.1.2.4.1 ESL Resource Status Monitoring
The status of the following resources will be monitored by ESL:

a. ESL serial interface hardware (SIO) for radar external interfaces
b. ESL subsystem computers (Communications Gateway (CGW), MCW, TCW, TDW)
c. Support subsystem computers (SSS, GPW)
d. ESL subsystem main LAN networks communication Routers, Switches and Hubs
e. Support Subsystem network communication Routers, Switches, Hubs and Firewall
f. GPS Time Reference Source external interface
g. Radar interface status
h. ESL software (resident in ESL Subsystem computers)
i. Page printer

3.2.1.2.4.1.1 SIO Status Monitoring
When the ESL subsystem is in normal mode, and at least one CGW is On-line, hardware status information **shall[STARS-SSD-01444]** be displayed at the MCP for each instance of ESL main and alternate SIO enclosures.

Failure of any SIO module or associated serial channels **shall[STARS-SSD-01445]** be detected automatically and result in visual and audible indications at the MCP.

When the ESL subsystem is in test mode, SIO enclosures **shall[STARS-SSD-01446]** be excluded from monitoring.

3.2.1.2.4.1.2 CGW Status Monitoring
Status information **shall[STARS-SSD-01447]** be displayed at the MCP for the hardware and application software associated with ESL CGWs.

When a CGW has an On-line state, failure of any critical CGW hardware or software component **shall[STARS-SSD-01448]** be detected automatically and result in visual and audible indications at the MCP.

Upon detection of a critical failure, a CGW **shall[STARS-SSD-01449]** be automatically transitioned to an Off-line state.

CGW hardware and application software components **shall[STARS-SSD-01450]** only be monitored when the CGW is in an On-line state.

3.2.1.2.4.1.3 MCW Status Monitoring

Status information **shall[STARS-SSD-01451]** be displayed at the MCP for the hardware and application software associated with each ESL MCW.

When an MCW has an On-line state, failure of any critical MCW hardware or application software component **shall[STARS-SSD-01452]** be detected automatically and result in visual and audible indications at the MCP.

Upon detection of a critical failure, an MCW **shall[STARS-SSD-01453]** be automatically transitioned to an Off-line state.

MCW hardware and application software components **shall[STARS-SSD-01454]** only be monitored when the MCW is in an On-line state.

3.2.1.2.4.1.4 TCW/TDW Status Monitoring

Status information **shall[STARS-SSD-01455]** be displayed at the MCP for the hardware and application software associated with each ESL TCW and TDW.

When a TCW or TDW has an On-line state, failure of any critical TCW or TDW hardware or application software components **shall[STARS-SSD-01456]** be detected automatically and result in visual and audible indications at the MCP.

TCW or TDW hardware and application software components **shall[STARS-SSD-01457]** only be monitored when the TCW or TDW is in an On-line state.

Upon detection of a critical failure, the TCW or TDW display **shall[STARS-SSD-01458]** be frozen and display an informational message to the operator.

In the absence of a failure, when the ESL service level is unavailable, a TCW/TDW in Normal or Training mode **shall[STARS-SSD-01459]** display a warning banner.

3.2.1.2.4.1.5 GPS Interface Status Monitoring

Status information **shall[STARS-SSD-01460]** be displayed at the MCP for the hardware associated with the GPS time source interface into the ESL subsystem.

When the GPS interface has an On-line state, failure of the GPS interface hardware **shall[STARS-SSD-01461]** be detected automatically and result in visual and audible indications at the MCP.

3.2.1.2.4.1.6 Radar Interface Status Monitoring

3.2.1.2.4.1.6.1 Radar Interface

When ESL is in normal mode, it **shall[STARS-SSD-01462]** use the results of monitoring associated SIO serial channels to determine the feed status for each radar interface.

When ESL is in normal mode and at least one CGW is On-line, status information **shall[STARS-SSD-01463]** be displayed at the MCP for each radar interface.

When ESL is in normal mode, for each radar interface, detailed status information **shall[STARS-SSD-01464]** be displayed for radar feed status, and the results of monitoring PARROTs, permanent echoes, RTQC messages, Radar Status messages, and Radar Identification messages.

When ESL is in test mode, it **shall[STARS-SSD-01465]** monitor simulated radar interfaces.

When ESL is in test mode, for each simulated radar interface, detailed status information **shall[STARS-SSD-01466]** be displayed for the results of monitoring PARROTs, permanent echoes, and RTQC messages.

When a radar interface has an On-line state, failure of any monitored components **shall[STARS-SSD-01467]** be detected automatically and result in visual and audible indications at the MCP.

When all failures are resolved, the radar interface **shall[STARS-SSD-01468]** automatically return to a Pass status.

3.2.1.2.4.1.6.2 Radar Status Display

ESL **shall[STARS-SSD-01469]** use the results of monitoring received status messages to determine the radar site resource status to be displayed at the MCP.

Failure of any monitored radar site resource **shall[STARS-SSD-01470]** be detected automatically and result in visual indications at the MCP.

3.2.1.2.4.1.6.3 Radar Identification

Each radar interface **shall[STARS-SSD-01471]** have an adapted radar interface identifier.

ESL **shall[STARS-SSD-01472]** use the results of monitoring received radar identification messages to determine the radar identification status to be displayed at the MCP.

Failure of radar identification status **shall[STARS-SSD-01473]** be detected automatically and result in visual and audible indications at the MCP.

3.2.1.2.4.1.6.4 Radar Interface Adaptation

ESL **shall[STARS-SSD-01474]** monitor the presence and positional accuracy of beacon and search RTQC messages, including sector marks and test messages, in order to confirm the accuracy of received data.

For each radar interface, adaptation **shall[STARS-SSD-01475]** define the minimum and maximum number of beacon and search RTQC targets that can be received over an adaptable time period.

For each radar interface, adaptation **shall[STARS-SSD-01476]** define a range and azimuth location and positional tolerance for each search RTQC target.

For each radar interface, adaptation **shall[STARS-SSD-01477]** define a range and azimuth location and positional tolerance, Mode 3A code, and altitude for each beacon RTQC target.

For each radar interface, adaptation **shall[STARS-SSD-01478]** define the minimum and maximum number of beacon or search Sector Marks that can be received over an adaptable time period.

3.2.1.2.4.1.6.5 Radar PARROT Adaptation

ESL **shall[STARS-SSD-01479]** monitor the presence and positional accuracy of PARROTs in order to confirm the accuracy of received data.

For each radar interface, adaptation **shall[STARS-SSD-01480]** define the number of PARROTs to be monitored, and for each PARROT the minimum and maximum number of PARROT targets that can be received over an adaptable time period.

For each radar interface, adaptation **shall[STARS-SSD-01481]** define for each PARROT, a range and azimuth location and positional tolerance.

For each radar interface, adaptation **shall[STARS-SSD-01482]** define for each PARROT, a valid Mode 3A code.

For each radar interface, adaptation **shall[STARS-SSD-01483]** define for each PARROT, the number of range and azimuth difference samples to be collected.

For each radar interface, adaptation **shall[STARS-SSD-01484]** define for each PARROT, a mean range and azimuth difference tolerance.

3.2.1.2.4.1.6.6 Radar Permanent Echo Adaptation

When monitoring is enabled, ESL **shall[STARS-SSD-01485]** monitor the presence and positional accuracy of permanent echoes in order to confirm the accuracy of received data.

For each radar interface, adaptation **shall[STARS-SSD-01486]** define the number of permanent echoes to be monitored, and for each permanent echo the minimum and maximum number of permanent echo targets that can be received over an adaptable time period.

For each radar interface, adaptation **shall[STARS-SSD-01487]** define for each permanent echo, a range and azimuth positional tolerance.

For each radar interface, adaptation **shall[STARS-SSD-01488]** define for each permanent echo, the number of range and azimuth positional difference samples that will be collected.

For each radar interface, adaptation **shall[STARS-SSD-01489]** define for each permanent echo, a mean range and azimuth difference tolerance.

3.2.1.2.4.1.6.7 MCP State of OSF and SCSC

State information **shall[STARS-SSD-01490]** be displayed at the MCP for the Control State associated with the OSF and SCSC external system interfaces.

When an OSF or SCSC external system interface has an On-line Control State, activity/inactivity of the connection **shall[STARS-SSD-01491]** be detected automatically and result in the State being automatically set to an Active/Inactive state.

Upon a change of Control of the OSF or SCSC external system interface, a visual indication **shall[STARS-SSD-01492]** be provided at the MCP.

3.2.1.2.4.1.6.8 MCP Status of GPWs, Page Printer and SSS

Status information **shall[STARS-SSD-01493]** be displayed at the MCP for the hardware status of each GPW, the Page Printer and the SSS within the Support Subsystem.

Failure of the SSS, the Page Printer or any GPW **shall[STARS-SSD-01494]** be detected automatically and result in visual and audible indications at the MCP.

When all failures are resolved, the SSS, the Page Printer or GPW **shall[STARS-SSD-01495]** automatically transition to a Pass status.

3.2.1.2.4.1.6.9 MCP Status of Network Equipment

Status information **shall[STARS-SSD-01496]** be displayed at the MCP for the hardware associated with each Hub, Router and Switch within the ESL and Support Subsystems.

Failure of network hardware components **shall[STARS-SSD-01497]** be detected automatically and result in visual and audible failure indications at the MCP.

When all failures are resolved, ESL or Support network equipment (Hubs, Routers or Switches) **shall[STARS-SSD-01498]** automatically transition to a Pass status.

The ESL MCP **shall[STARS-SSD-01499]** display network switch status as "Degraded" if one or two switch ports are failed and "Fail" if three or more switch ports are failed.

3.2.1.2.4.1.6.10 MCP Status of Firewall and WAN Router

Status information **shall[STARS-SSD-01500]** be displayed at the MCP for the hardware associated with the Firewall and WAN Router.

Failure of the Firewall or WAN Router hardware components **shall[STARS-SSD-01501]** be detected automatically and result in visual and audible indications at the MCP.

When all failures are resolved, the Firewall and WAN Router **shall[STARS-SSD-01502]** automatically transition to a Pass status.

3.2.1.2.4.2 Automatic Status Data Acquisition
ESL **shall[STARS-SSD-01503]** automatically provide status information at the MCP for each ESL resource (as included in 3.2.1.2.4.1).

3.2.1.2.4.3 Automatic Failure Detection
Failure of any resource monitored by ESL (as included in 3.2.1.2.4.1) **shall[STARS-SSD-01504]** be detected automatically.

3.2.1.2.4.4 MCP Failure Detection
When possible, a visual indication of a ESL MCP failure **shall[STARS-SSD-01505]** be displayed on the associated workstation.

3.2.1.2.4.5 MCP Failure Tolerance
In the event of MCP failure, the rest of the service level **shall[STARS-SSD-01506]** continue operating autonomously, providing ATC Operational functionality.

3.2.1.2.4.6 Hardware Component Status
The status of each ESL hardware components (as included in 3.2.1.2.4.1) **shall[STARS-SSD-01507]** be monitored.

3.2.1.2.4.7 Software Component Status
ESL **shall[STARS-SSD-01508]** monitor the status of the ESL software components (as included in 3.2.1.2.4.1).

3.2.1.2.4.8 External Interface Status
ESL **shall[STARS-SSD-01509]** monitor the status of the ESL external system interfaces (as included in 3.2.1.2.4.1).

The status of each external system interface (as included in 3.2.1.2.4.1) **shall[STARS-SSD-01510]** be displayed.

3.2.1.2.4.9 Radar Status Monitoring

3.2.1.2.4.9.1 Correction Factors Display
For a specified radar, MCP input **shall[STARS-SSD-01511]** display and print the current search collimation correction factors being used by the ESL subsystem.

3.2.1.2.4.9.2 Correction Factors Indication
For a specified radar, MCP input **shall[STARS-SSD-01512]** enter and apply new search target range and azimuth collimation correction factors to be used by the ESL subsystem.

Each entered search target range and azimuth correction factor **shall[STARS-SSD-01513]** be compared against adaptable thresholds and rejected when not within the adapted range.

Valid search target range and azimuth correction factor entries **shall[STARS-SSD-01514]** be applied to all search radar messages received from the radar and used by each TCP.

An informational system message **shall[STARS-SSD-01515]** be displayed indicating that new collimation correction factors have been applied to the ESL subsystem for the radar.

3.2.1.2.4.9.3 Permanent Echo/PARROT Display
In ESL mode, each TCW and TDW **shall[STARS-SSD-01516]** display PARROTs and permanent echoes for the currently selected radar.

3.2.1.2.4.9.4 RTQC and Test Targets Display
In ESL mode, each TCW and TDW **shall[STARS-SSD-01517]** allow for display of beacon and search RTQC targets excluding sector marks for the currently selected radar.

In ES workstation mode, each TCW and TDW **shall[STARS-SSD-01518]** display search test targets for the currently selected radar.

3.2.1.2.4.9.5 Status and Radar Identification Message Display
The results of monitoring status and radar identification messages from surveillance systems **shall[STARS-SSD-01519]** be displayed at the MCP.

3.2.1.2.4.9.6 ESL MCP/TCP Switching
When a TCW or TDW is configured in ESL mode, TCP input **shall[STARS-SSD-01520]** switch the workstation from a TCP to a monitoring MCP.

When a TCW or TDW is configured as a monitoring MCP, MCP input **shall[STARS-SSD-01521]** switch the workstation from an MCP to a TCP.

The MCP **shall[STARS-SSD-01522]** be prevented from switching to a TCP, if the MCP is currently logged on and therefore has control authorization.

3.2.1.2.4.9.7 Radar Detailed Status Inhibit
When no Parrots, PEs, or Radar Identification Messages are adapted for a radar, the MCW **shall[STARS-SSD-01523]** inhibit display of the corresponding status line on that radar's detailed status screen.

3.2.1.2.4.10 ESL Event Notifications
Notification data **shall[STARS-SSD-01524]** include the associated ESL resource identification, date, and timestamp.

Redundant or duplicate notifications **shall[STARS-SSD-01525]** be filtered out.

ESL **shall[STARS-SSD-01526]** generate a notification when an alarm, alert, error, or state change occurs in the system for a monitored resource.

When ESL generates an alarm status event, an audible alarm **shall[STARS-SSD-01527]** also sound at all monitoring MCPs.

Only the MCP with current control authority **shall[STARS-SSD-01528]** be allowed to perform manual alarm acknowledgement.

When the MCP with current control authority acknowledges the alarm, the audible alarm at all monitoring MCPs **shall[STARS-SSD-01529]** by default also be acknowledged.

MCP input **shall[STARS-SSD-01530]** acknowledge selected alarm notifications which simultaneously silences any associated audible alarms.

MCP input **shall[STARS-SSD-01531]** silence all audible alarms without affecting the associated alarm notifications.

For any resource, unacknowledged audible and visual alarms **shall[STARS-SSD-01532]** be automatically acknowledged if the MCP performs a reconfiguration action to change its resource state (e.g., cold-start, warm-start, Off-line, Software switch).

MCP input **shall[STARS-SSD-01533]** control the volume of the ESL audible alarm over an adaptable range.

The minimum and maximum values of the MCP selectable volume control **shall[STARS-SSD-01534]** be adaptable between 0 and 100.

3.2.1.2.5 System Control

3.2.1.2.5.1 System Control Authority

3.2.1.2.5.1.1 MCP Login

MCP input **shall[STARS-SSD-01535]** allow the user to log into the ESL MCP and obtain authorization to control ESL resources.

During Login, the MCP **shall[STARS-SSD-01536]** display a "*" in the password entry field for each entered character.

The MCP **shall[STARS-SSD-01537]** reject an invalid password and display an error message.

If the log-in is successful, the MCP **shall[STARS-SSD-01538]** be given control authorization for the ESL subsystem.

When successfully logged on, the MCP display **shall[STARS-SSD-01539]** indicate that the current MCP has control authorization for the ESL subsystem.

The MCP **shall[STARS-SSD-01540]** use a single site-wide password.

When more than one MCP is configured, each MCP **shall[STARS-SSD-01541]** be provided with status monitoring capabilities, but only one can have control authorization for the ESL subsystem.

An indication of the current MCP authorization status **shall[STARS-SSD-01542]** be provided at each MCP.

3.2.1.2.5.1.2 MCP Global Password Changes

MCP input **shall[STARS-SSD-01543]** allow an MCP with control authorization to change the current site-wide password.

Changing the site-wide MCP password **shall[STARS-SSD-01544]** include verification of the password being changed, plus entry of a new password twice.

The password change **shall[STARS-SSD-01545]** be rejected if the entry of the password being changed is not valid, or the second entry of the new password is not identical to the first.

If the password change is rejected, an error notification **shall[STARS-SSD-01546]** be displayed indicating that an invalid MCP password change was attempted.

3.2.1.2.5.2 Switch Control Authority

MCP input **shall[STARS-SSD-01547]** allow the MCP with control authorization to manually relinquish control authority by logging out of the system.

Before control authority is relinquished, the MCP **shall[STARS-SSD-01548]** display a confirmation message.

Upon acceptance of the confirmation message via MCP input, the MCP **shall[STARS-SSD-01549]** relinquish control authorization.

Following log-out, the current MCP display **shall[STARS-SSD-01550]** indicate monitor-only authorization.

3.2.1.2.5.3 Control ESL Resources

The ESL Subsystem computers **shall[STARS-SSD-01551]** be controlled by the ESL MCP.

The ESL Radar external interface main and alternate feeds **shall[STARS-SSD-01552]** be controlled by the ESL MCP.

The ESL serial interface hardware (SIO) external interface **shall[STARS-SSD-01553]** be controlled by the ESL MCP.

The OSF and SCSC external interface **shall[STARS-SSD-01554]** be controlled by the ESL MCP.

The GPS Time Reference Source external interface **shall[STARS-SSD-01555]** be controlled by the ESL MCP.

3.2.1.2.5.4 Software and Data Transfer Control
Operator input **shall[STARS-SSD-01556]** control the transfer of software baselines and adaptation data sets to all ESL Subsystem computers.

Operator input **shall[STARS-SSD-01557]** control the transfer of core dump and log files from all ESL Subsystem computers.

3.2.1.2.5.5 Diagnostics
ESL **shall[STARS-SSD-01558]** include MCP initiated CAS diagnostics for ESL Subsystem computers.

ESL **shall[STARS-SSD-01559]** include MCP initiated CAS diagnostics for ESL serial interface hardware (SIO) for radar external interfaces.

ESL **shall[STARS-SSD-01560]** include MCP initiated CAS diagnostics for Support Subsystem Computers (GPWs and the SSS).

3.2.1.2.5.6 Configuration Control

3.2.1.2.5.6.1 Software Release Level Control
Allocation of specific software components or baselines for operational use **shall[STARS-SSD-01561]** be controlled by MCP input.

3.2.1.2.5.6.2 ESL Coldstart
MCP input **shall[STARS-SSD-01562]** initiate a reset of all ESL Subsystem computers and restart of their associated operating systems and application software.

3.2.1.2.5.6.3 ESL Warmstart
MCP input **shall[STARS-SSD-01563]** initiate an application software reload and restart in all ESL Subsystem computers.

3.2.1.2.5.6.4 Restart
ESL **shall[STARS-SSD-01564]** include MCP-initiated ESL restart.

3.2.1.2.5.6.5 Resource Coldstart
MCP input **shall[STARS-SSD-01565]** initiate a cold-start of a user-defined set of ESL Subsystem computers.

ESL System State including system parameters, data processing and presentation **shall[STARS-SSD-01566]** revert to a default state after a cold-start of the entire ESL subsystem.

3.2.1.2.5.6.6 Resource Warmstart

MCP input **shall[STARS-SSD-01567]** initiate a warm-start of a user-defined set of ESL Subsystem computers.

ESL System State including system parameters, data processing and presentation **shall[STARS-SSD-01568]** be maintained after a warm-start of the entire ESL subsystem, or a specific workstation.

3.2.1.2.5.6.7 State after Recovery

Recovery from system wide power failures **shall[STARS-SSD-01569]** return the ESL system to operational and training Air Traffic control processing activities including data processing and presentation in existence prior to the power failure, unless the operating system did not recover. The definition of operational and training Air Traffic control processing activities excludes the following:

a. Resource and performance verification tests including On-line and Off-line diagnostics.
b. Control and Monitor MCPs will recover from the power failure by coming up with Monitor Authorization with windows and menus in a default state.
c. Temporary adjustments, for example, display center when a center adjustment is not active.

TCWs and TDWs in training exercises will be returned to the training exercise but training data will not be automatically restarted.

3.2.1.2.5.6.8 Control State

3.2.1.2.5.6.8.1 Control of Resources

MCP input **shall[STARS-SSD-01570]** configure the ESL Subsystem computers into the On-line or Off-line state.

MCP input **shall[STARS-SSD-01571]** configure the ESL Radar external interfaces main and alternate feeds into the On-line or Off-line state.

MCP input **shall[STARS-SSD-01572]** configure the ESL serial interface hardware (SIO) external interfaces into the On-line or Off-line state.

MCP input **shall[STARS-SSD-01573]** configure the SCSC and OSF external interface into the On-line or Off-line state.

MCP input **shall[STARS-SSD-01574]** configure the GPS Time Reference Source external interface into the On-line or Off-line state.

A single MCP command **shall[STARS-SSD-01575]** configure multiple SIO modules within a single selected enclosure.

3.2.1.2.5.6.8.2 GPS Interface Control
When the GPS interface has an Off-line state, the ESL subsystem time **shall[STARS-SSD-01576]** be synchronized using the internal CAS workstation time.

When the GPS interface has an Off-line state, MCP input **shall[STARS-SSD-01577]** be able to change the ESL subsystem time.

When the GPS interface has an On-line state, the MCP **shall[STARS-SSD-01578]** be prevented from changing the ESL subsystem time.

3.2.1.2.5.6.8.3 ESL Subsystem Computer Control
The list of workstations eligible for Off-line selection **shall[STARS-SSD-01579]** include workstations in an On-line state for which other MCP control actions are not currently in progress.

The MCP **shall[STARS-SSD-01580]** be prevented from reconfiguring the local MCP Off-line.

The list of workstations eligible for On-line selection **shall[STARS-SSD-01581]** include workstations in an Off-line state for which other MCP control actions are not currently in progress.

3.2.1.2.5.6.8.4 Radar Feed Control
When a radar feed is Off-line, the data being received by ESL for the radar feed **shall[STARS-SSD-01582]** be excluded from display at TCWs and TDWs.

When a radar feed is Off-line, radar feed status **shall[STARS-SSD-01583]** still be monitored in order to provide the MCP with the current condition of the serial channels associated with the feed.

The MCP **shall[STARS-SSD-01584]** be prevented from controlling the state of the radar feeds for multiple radar interfaces simultaneously.

When a live radar interface has an Off-line state, RTQC messages, Radar Status Messages, Radar identification messages, PARROTs, and permanent echoes **shall[STARS-SSD-01585]** be excluded from monitoring.

3.2.1.2.5.6.8.5 Control of PARROT and Permanent Echo Status Monitoring
MCP input **shall[STARS-SSD-01586]** inhibit or enable the reporting of the status of each adapted PARROT and permanent echo.

If reporting is inhibited for a PARROT or permanent echo, its status **shall[STARS-SSD-01587]** be displayed as Off-line at the MCP.

If reporting is inhibited for a PARROT or permanent echo, its status **shall[STARS-SSD-01588]** not contribute to the status of its associated radar.

3.2.1.2.5.6.9 ESL Shutdown
MCP input **shall[STARS-SSD-01589]** initiate a shutdown of ESL Subsystem Computers.

ESL System State including system parameters, data processing and presentation **shall[STARS-SSD-01590]** revert to a default state after a shutdown of the entire ESL subsystem.

3.2.1.2.6 ESL Subsystem Verification

The process of verification is employed to ensure that the subsystem (or resources within it) is providing or is capable of providing the specified service to the user at any given time. Three types of verification are required for STARS: Diagnostic Tests, Resource Verification, and Performance Verification. At any given time, only one form of verification may be underway.

This section defines the requirements for ESL Subsystem Verification, with control from the MCP in ESL mode.

3.2.1.2.6.1 ESL Diagnostic Tests

ESL Diagnostic Tests includes Off-line and On-line diagnostic tests on a per resource basis, as well as periodic processing performed in the background while a resource is On-line. Examples of On-line background tests include a processor test, a memory test, a disk test, and software checksum, software version, adaptation checksum, and adaptation version checks.

3.2.1.2.6.1.1 Off-Line Resource Diagnostics

MCP input will initiate CAS diagnostics for the following resources when in the off-line state:

a. ESL subsystem computers.
b. ESL serial interface hardware (SIO) for radar external interfaces.

3.2.1.2.6.1.1.1 Off-Line SIO Diagnostics

MCP input **shall[STARS-SSD-01591]** initiate an Off-line SIO diagnostic test on a specified SIO module.

The MCP **shall[STARS-SSD-01592]** be prevented from performing Off-line diagnostic tests on multiple SIO modules simultaneously.

Once initiated, an Off-line SIO diagnostic test **shall[STARS-SSD-01593]** run to completion unless terminated by the MCP.

When an Off-line diagnostic test is running on a SIO, the MCP **shall[STARS-SSD-01594]** be prevented from including the SIO in any MCP control action or diagnostic until the Off-line diagnostic test has completed or is terminated by the MCP.

At the completion of the Off-line SIO diagnostic test, a test report **shall[STARS-SSD-01595]** automatically be generated.

The MCP **shall[STARS-SSD-01596]** be able to print the Off-line SIO diagnostic test report on the network printer.

3.2.1.2.6.1.1.2 Off-Line Subsystem Computer Diagnostics

MCP input **shall[STARS-SSD-01597]** initiate an Off-line CAS diagnostic test on ESL Subsystem Computers.

Once initiated, an Off-line CAS diagnostic test **shall[STARS-SSD-01598]** run to completion unless terminated by the MCP.

When a workstation is involved in an Off-line CAS diagnostic test, the MCP **shall[STARS-SSD-01599]** be prevented from including the workstation in any other MCP control action or diagnostic until the Off-line diagnostic test has completed or is terminated by the MCP.

At the completion of an Off-line CAS diagnostic test, a test report **shall[STARS-SSD-01600]** be automatically generated.

The Off-line CAS diagnostic test report **shall[STARS-SSD-01601]** contain a matrix of the workstations involved in the test, the tests performed, and the results of the test.

The MCP **shall[STARS-SSD-01602]** be able to print the Off-line CAS diagnostic test report on the network printer.

3.2.1.2.6.1.2 On-Line Diagnostic and Periodic Background Verification

3.2.1.2.6.1.2.1 Hardware and Software Background Verification Tests

A set of periodic background tests **shall[STARS-SSD-01603]** automatically be performed on all On-line ESL Subsystem Computers as part of normal MCP status monitoring.

Once initiated, periodic on-line hardware diagnostic tests **shall[STARS-SSD-01604]** run without human intervention.

Off-line ESL Subsystem Computers **shall[STARS-SSD-01605]** be excluded from periodic background tests.

The set of periodic background tests **shall[STARS-SSD-01606]** include a processor test, a memory test, a disk test, and software checksum, software version, adaptation checksum, and adaptation version checks.

The results of each periodic background test **shall[STARS-SSD-01607]** be displayed for ESL Subsystem Computers.

Failure of any periodic background test **shall[STARS-SSD-01608]** be detected automatically and result in a visual and audible indication at any MCP.

The detection of a software version, software checksum, adaptation version, or adaptation checksum test failure within a ESL Subsystem Computer **shall[STARS-SSD-01609]** cause that computer to be declared to have a critical failure.

Periodic background tests **shall[STARS-SSD-01610]** be canceled on a workstation upon initiation of a resource verification test or On-line CAS diagnostic test that includes that workstation.

3.2.1.2.6.1.2.2 Application Software Verification
Periodic on-line tests **shall[STARS-SSD-01611]** be performed to verify that corruption of application software has not occurred since loading.

3.2.1.2.6.1.2.3 Software Release Verification
Periodic on-line tests **shall[STARS-SSD-01612]** be performed to verify that all software components in the configuration have consistent release levels for the operational and backup software.

3.2.1.2.6.1.2.4 Background Verification Period Control
MCP input **shall[STARS-SSD-01613]** select the period at which the set of periodic background tests are to be performed for the ESL subsystem from a value within an adaptable range.

The adaptable range **shall[STARS-SSD-01614]** be set such that the background tests can be turned off, and so that the minimum period will not affect the ESL subsystem computer reserve (section 3.10) requirements.

3.2.1.2.6.1.2.5 On-Line Diagnostic Tests
MCP input **shall[STARS-SSD-01615]** initiate a series of CAS diagnostic tests, for the following resources when in an On-line state:

a. ESL subsystem computers.
b. Support Subsystem Computers (SSS and GPWs).

The MCP **shall[STARS-SSD-01616]** be prevented from initiating an On-line CAS diagnostic test if a resource or performance verification test is already in progress.

When a workstation is involved in an On-line CAS diagnostic test, the MCP **shall[STARS-SSD-01617]** be prevented from including the workstation in any other MCP action or diagnostic test until the On-line diagnostic test has completed or is terminated by the MCP.

Once initiated, an On-line CAS diagnostic test function **shall[STARS-SSD-01618]** run to completion unless terminated by the MCP.

3.2.1.2.6.1.2.6 Display of On-Line Diagnostic Test Results
Results of On-line diagnostic tests **shall[STARS-SSD-01619]** be displayed at the initiating MCP.

At the completion of an On-line CAS diagnostic test, a test report **shall[STARS-SSD-01620]** automatically be generated.

The On-line CAS diagnostic test report **shall[STARS-SSD-01621]** contain a matrix of the workstations involved in the test, the tests performed and the results of the test.

The MCP **shall[STARS-SSD-01622]** be able to print the On-line CAS diagnostic test report on the network printer.

3.2.1.2.6.2 Resource Verification
Resource Verification provides a means of sequentially applying the On-line diagnostic tests discussed above plus the background periodic tests so that all ESL resources are verified.

3.2.1.2.6.2.1 Resource Verification Test Initiation
MCP input **shall[STARS-SSD-01623]** initiate a resource verification test of ESL.

3.2.1.2.6.2.2 Resource Verification Tests
Verification tests for each resource (ESL subsystem computers, GPWs and the SSS) **shall[STARS-SSD-01624]** be performed On-line when resource verification tests are initiated.

The MCP **shall[STARS-SSD-01625]** be prevented from initiating a resource verification test if a resource verification, performance verification, or On-line CAS diagnostic test is already in progress.

Once initiated, a resource verification test **shall[STARS-SSD-01626]** run to completion unless terminated by the MCP.

When a resource verification test is in progress, the MCP **shall[STARS-SSD-01627]** be prevented from performing any of the following until the resource verification test has completed, or is terminated by the MCP:

a. Initiating a performance verification or On-line diagnostic test.
b. Initiating an MCP control action on the workstations involved in the current resource verification test (Resource Verification only includes On-line workstations).

MCP initiated resource verification tests **shall[STARS-SSD-01628]** initiate CAS diagnostic tests (including CPU, memory, and interfaces), software corruption and version checks, and adaptation corruption and version checks, for all On-line ESL subsystem computers.

MCP initiated resource verification tests **shall[STARS-SSD-01629]** initiate CAS diagnostic tests (including CPU, memory, and interfaces) on Support Subsystem computers (SSS and GPWs).

3.2.1.2.6.2.3 Resource Verification Test Report Results
At the completion of a resource verification test, a test report **shall[STARS-SSD-01630]** automatically be generated.

3.2.1.2.6.2.4 Resource Verification Test Report Content
The resource verification test report **shall[STARS-SSD-01631]** contain a matrix of the resources used in the test, the tests performed and the results of the test.

3.2.1.2.6.2.5 Resource Verification Test Report Time Stamp
Results captured in the resource verification test report **shall[STARS-SSD-01632]** be date and time stamped.

3.2.1.2.6.2.6 Resource Verification Test Report Display
The resource verification test report **shall[STARS-SSD-01633]** be displayed at the initiating MCP.

The MCP **shall[STARS-SSD-01634]** be able to print the resource verification test report on the network printer.

3.2.1.2.6.3 Performance Verification

Performance Verification, like Resource Verification, verifies an entire service level while the system is On-line. But rather than sequentially employing overlapping background resource verification tests, Performance Verification exercises an end to end thread. Simulated inputs are intermixed with real inputs to verify that the service level can provide moment-to-moment separation of aircraft. A TCW or TDW that has been switched to a Performance Verification mode by MCP input is dedicated to displaying the simulated targets that are invisible on operational displays. The Performance Verification mode TCW or TDW will also participate in result evaluations for display at the initiating MCP.

3.2.1.2.6.3.1 Performance Verification Test, Manual Initiation

MCP input **shall[STARS-SSD-01635]** initiate performance verification tests concurrent with the air traffic operations.

The MCP **shall[STARS-SSD-01636]** be prevented from initiating a performance verification test if a performance verification, resource verification, or On-line diagnostic test is already in progress.

Once initiated, a performance verification test **shall[STARS-SSD-01637]** run to completion unless terminated by the MCP.

When a performance verification test is in progress, the MCP **shall[STARS-SSD-01638]** be prevented from initiating any MCP actions, except for authorization control or workstation options (e.g., change cursor speed), until the performance verification test has completed or has been terminated by the MCP.

The MCP **shall[STARS-SSD-01639]** be prevented from initiating performance verification at the TRACON or RAPCON and remote tower simultaneously.

3.2.1.2.6.3.2 Performance Verification Workstation

MCP input **shall[STARS-SSD-01640]** select a TCW or TDW and direct it to enter its performance verification mode.

Target data **shall[STARS-SSD-01641]** be displayed for the test radar interface at the selected TCW or TDW.

An indication **shall[STARS-SSD-01642]** be provided at the selected TCW or TDW to indicate that the workstation is being used for a performance verification test.

3.2.1.2.6.3.3 Simulated Radar Data

During a performance verification test at the TRACON or RAPCON, scenario data **shall[STARS-SSD-01643]** automatically be injected into ESL for up to sixteen radar interfaces.

During a performance verification test at a remote tower, scenario data **shall[STARS-SSD-01644]** automatically be injected into ESL for the local radar interface at the tower.

For up to sixteen simulated radar interfaces, the ESL performance verification scenario **shall[STARS-SSD-01645]** inject target data in order to verify ESL processing of simulated PARROTs, permanent echoes, special condition codes, and RTQC messages.

Scenario data from the simulator for the test radar interface **shall[STARS-SSD-01646]** be looped back, processed by the SIO, and received by each ESL CGW before being displayed at the selected TCW or TDW.

At the TRACON or RAPCON, simulated data for a single radar **shall[STARS-SSD-01647]** use the test radar interface during performance verification.

At a remote tower, simulated data for the direct radar interface **shall[STARS-SSD-01648]** use the test radar interface during performance verification.

Dedicated SIO serial channels **shall[STARS-SSD-01649]** be used to provide the test radar interface.

At the TRACON or RAPCON, all performance verification simulated radars not using the test radar interface **shall[STARS-SSD-01650]** be injected at the CGW.

Performance verification **shall[STARS-SSD-01651]** employ the same adaptation data set as that used during normal status monitoring of PARROTs, permanent echoes, and RTQC messages.

3.2.1.2.6.3.4 Performance Verification Test Report Results

At the completion of a performance verification test, a test report **shall[STARS-SSD-01652]** automatically be generated.

The performance verification test report **shall[STARS-SSD-01653]** include a summary of the results of the performance verification test.

3.2.1.2.6.3.5 Performance Verification Test Report Deviation

The performance verification test report **shall[STARS-SSD-01654]** indicate the deviations from the predefined expected results.

3.2.1.2.6.3.6 Performance Verification Test Report Content

The performance verification test report **shall[STARS-SSD-01655]** contain a status for each test performed indicating which tests have passed and which tests have failed.

3.2.1.2.6.3.7 Performance Verification Test Report Time Stamp

The performance verification test report **shall[STARS-SSD-01656]** include a date and time stamp.

3.2.1.2.6.3.8 Performance Verification Test Report Display
The performance verification test report **shall[STARS-SSD-01657]** be displayed at the initiating MCP.

The MCP **shall[STARS-SSD-01658]** be able to print the performance verification report on the network printer.

3.2.1.2.7 ESL Time Source
The ESL time **shall[STARS-SSD-01659]** be synchronized to an independent GPS Time Source.

3.2.1.2.8 MCP Data Entry

3.2.1.2.8.1 Entry of System Operational Function Data
All command and data input associated with the monitor and control functions specified in this section **shall[STARS-SSD-01660]** be accepted at any MCP.

3.2.1.2.8.2 System Test Inputs
MCP input **shall[STARS-SSD-01661]** switch ESL between Normal mode and Test Mode without regard to the FSL Test Mode after receiving confirmation from the MCP.

The following requirements apply to workstations only when in the ES mode (interaction is with ESL) -- see Section 3.1).

3.2.1.2.9 MCP Data Display

3.2.1.2.9.1 Service Level Availability Indicator
MCP input **shall[STARS-SSD-01662]** display and print the current status of ESL at operational sites that support ESL.

3.2.1.2.9.2 Display of System Operational Function Data
Local ESL MCPs will display, when requested, the input and output data associated with the system ESL Monitor & Control functions.

3.2.1.2.9.2.1 Current Time Display
The ESL system time **shall[STARS-SSD-01663]** be displayed at all times on all ESL MCP displays.

3.2.1.2.9.2.2 Resource Status Display
ESL **shall[STARS-SSD-01664]** provide the MCP with a System Status message window that displays the following status monitoring and system control events:

a. Notifications generated as a result of resource status monitoring events.
b. Informational messages that are generated as a result of invalid system events.
c. Informational ATC Operational events that have occurred at a TCP.
d. Input events that have occurred at the MCP.

The last 3000 messages or 24 hours worth if less than 3000 are available, **shall[STARS-SSD-01665]** be displayed in the system status message window.

MCP input **shall[STARS-SSD-01666]** allow the operator to select all or a subset of system status messages to be printed to the network printer.

Each configured MCP, irrespective of control authority, **shall[STARS-SSD-01667]** automatically write all Notifications, Informational error messages, and Informational ATC operational events to a system message file on the workstation at which the MCP is configured.

A new file **shall[STARS-SSD-01668]** be created when the MCP is initially configured, and then every twenty four hours at a set time.

When a user assumes control authority for ESL, this MCP **shall[STARS-SSD-01669]** automatically write all MCP inputs to the system message file on all workstations at which the MCP is configured.

3.2.1.2.9.2.3 MCP Request Response Times
An indication of the progress of functions requested by MCP input **shall[STARS-SSD-01670]** be displayed every 5 seconds or less until the function has completed.

3.2.1.2.9.2.4 Configuration Display
A graphic view of the ESL configuration **shall[STARS-SSD-01671]** be displayed at the ESL MCP.

MCP input **shall[STARS-SSD-01672]** display and print an ESL System Status Report.

The ESL System Status report **shall[STARS-SSD-01673]** include an entry for each resource currently configured by ESL.

3.2.1.2.9.2.5 Notification Display
All ESL notifications **shall[STARS-SSD-01674]** be displayed.

3.2.1.2.9.2.6 Notification Retrieval
All ESL notifications **shall[STARS-SSD-01675]** be available for display for a period of 24 hours.

3.2.1.2.9.3 ATC Operational Events
Local MCPs **shall[STARS-SSD-01676]** display the data associated with ATC operational events.

Data associated with ATC operational events **shall[STARS-SSD-01677]** be printed.

3.2.1.2.10 ES Performance
To the extent applicable, ESL performance will conform to the following response times while operating with the defined workload while maintaining the resource reserves specified in Computer Resources**.**

3.2.1.2.10.1 ES TAS Workload and Capacity

The ES TAS **shall[STARS-SSD-01678]** process the workload specified in the following tables:

The ES TAS **shall[STARS-SSD-01679]** accommodate individual capacities as specified in Tables 3.2.1.2.10-1 and 3.2.1.2.10-2. In most cases, workload equals capacity and a single number appears in the table; both workload and capacity are verified in the same test. Where an individual capacity is greater than the workload, the tables use the notation: Workload/Capacity. In these cases, the "Workload" value is used for the workload test, while separate tests verify that each capacity is supported. These tables do not include all capacities; others are specified in individual requirements throughout Section 3.

Table 3.2.1.2.10-1 ES System Workload, Sources and Destinations of Data

Source	EDC	ISC	FS-1	FS-2	FS-2A
Surveillance Sensors	3	3	3	16	16
Long-Range Sensors	1	1	1	4	4
Short-Range Sensors	2	2	2	12	11
Other Sensors[3]	-	-	-	-	1
Maximum total of TCWs and TDWs	42	42	42	50	50/128
Number of Keyboards					126/234
Number of TDWs	24	24	24	24	24/41
Number of Remote Towers	-	-	-	6	6/23
TDWs per Remote Tower[1]	-	-	-	8	8
Number of Local Towers[2]	-	-	-	1	1
TDWs per Local Tower	-	-	-	6/16	7/16
Number of TCWs	18	18	18	26/29	26/92

1. The number of TDWs that can be supported at each Remote Tower is determined by the available link bandwidth. A total of 4 T1 lines (2 for FSL, 2 for ESL) will be needed to support 8 TDWs. A total of 2 T1 lines (shared between FSL and ESL) cannot support more than 4 TDWs.
2. Additional towers may be implemented locally, but exist within the STARS architecture as remote towers.
3. Currently for ESL "Other Sensors" will be interpreted as additional short-range radars. In future builds where only FSL supports a new sensor type, ESL workload will be measured with reduced number of short-range radars, while still processing the required number of target reports per second.
4. EDC – Early Display Configuration
5. ISC – Initial System Capability

Table 3.2.1.2.10-2 ES System Workload, Airspace Definition

Source	EDC	ISC	FS-1	FS-2	FS-2A
Terminal Areas	1	1	1	1	1
Surveillance Coverage Area (nmi.)	400x400	400x400	400x400	400x400	512x512
Geographic Maps					
Lines per map (average)	1000	1000	1000	1000	1000
Symbols per map (average)	200	200	200	200	200
Arcs per map (average)	-	-	-	75	75
Circles per map (average)	-	-	-	75	75
Maps per facility	32	52	32	52	225

Table 3.2.1.2.10-3 ES System Workload, input Message Rates

Message	EDC	ISC	FS-1	FS-2	FS-2A	Units
Surveillance Inputs						
Target Reports (aircraft)[1]	245	245	245	1118	1118	reports/sec
Percent from LRR	24	24	24	21	21	percent
Primary (Search) Reports Not from Aircraft Targets	208	208	208	926	926	reports/sec
Peak System Target Reports	864	864	864	3900	3900	reports/sec
Surveillance Weather Inputs						
WFMU or ARSR Weather (Avg.)[2]	15	15	15	15	15	msgs/radar/sec
WFMU or ARSR Weather (Avg.)[2]	80	80	80	80	80	msgs/radar/scan
WFMU or ARSR Weather	300	300	300	300	300	msgs/radar/cycle[3]
ARSR Weather (Peak)[2]	75	75	75	75	75	msgs/radar/sec
ARSR Weather (Peak)[2]	360	360	360	360	360	msgs/radar/scan
ARSR Weather (Peak)[2]	1300	1300	1300	1300	1300	msgs/radar/cycle[3]
ASR (Peak)	17	17	17	17	17	msgs/radar/sec

1. Represents the effects of multiple radar coverage and radar coverage beyond facility boundaries. Assume that 60% of LRR target reports will be passed by the STARS geographic area target filtering.
2. In computing aggregate load from multiple radars, assume one at the peak sensor rate and the balance at the average sensor rate.
3. A cycle consists of the multiple scans required to convey complete 360 degree weather map information.

Table 3.2.1.2.10-4 ES System Workload, Additional Input Message Rates

Message	EDC	ISC	FS-1	FS-2	FS-2A	Units[1]
Manually Entered Messages						
Display Control Messages						
Position Display Configuration	126	126	126	126	505	messages/hour
Relocate Data Area	61	61	61	61	335	messages/hour
Other	63	63	63	63	345	messages/hour
System Messages	9	9	9	9	50	messages/hour

1. Message rates do not specify maximum rate for individual messages.

Table 3.2.1.10-5 ES System Workload, Output Message Rates

Message	EDC	ISC	FS-1	FS-2	FS-2A	Units[1]
Transfer Data to Tower Display (per display)						
Data Block – 7 alphanumerics	140	140	140	140	140	Data Blocks/radar scan
Target Symbols[2]	210	210	210	210	210	Symbols/radar scan

1. Message rates do not specify maximum rate for individual messages.
2. Includes target symbols transferred to tower display as part of Data Block.

Table 3.2.1.10-6 ES System Workload, Single Sensor Peak Target Rates

Peaking Interval	Long Range Target Rate	Short Range Target Rate

90 degree quadrant	400	250
11.25 degree sector	N/A	50
1.2 degree wedge (1.3 degree for SRR)	20	16

Note: Surveillance targets will not necessarily be distributed uniformly around each radar site.

3.2.1.2.10.2 Individual Data Display Workload

The TCW or TDW operating in ES mode **shall[STARS-SSD-01680]** display the individual data workload specified in the following table:

Table 3.2.1.2.10-7 ES Individual Data Display Workload

Display Item[2]	TCW Item Count	TDW Item Count	Remarks
Data Blocks (noACID)	665	400	7 alphanumerics each (avg.)
Data Blocks (with manually entered ACID)	35	20	10 alphanumerics each (avg.)
Radar Target Data Target Position Symbol (only) Target Position Symbol Outline Target Extent Symbol Target History Symbol (5 histories)	 450 450 700 3500	 270 270 420 2100	No histories or TES
Radar Statistics Display (Entries), If implemented	25	25	20 alphanumerics per entry (avg.)
System Data Display Alphanumerics per display area	[1]	[1]	
Range Rings	50	30	Circle, 2nmi. Inc. @100nmi. range
Geographic Map Lines	10000	10000	Lines
Geographic Map Symbols	2000	2000	Single symbol
Geographic Map Arcs	750	750	Single circular arc
Geographic Map Circles	750	750	Circles
Compass Rose	1	1	
Weather Areas	9000	5400	Non-overlapping rectangles, minimum 75% screen coverage

1. The maximum number of FS-2 and FS-2A alphanumerics that the system is capable of generating in compliance with all applicable SSD requirements that define system data display are content and performance.
2. This table specifies the quantity of each display item that is required to be displaying individually by item. It is not required that the specified quantity of all items be displayable simultaneously.

3.2.1.2.10.3 Simultaneous Data Display Workload

The TCW or TDW operating in ES mode **shall[STARS-SSD-01681]** display the simultaneous data workload specified in the following table.

Table 3.2.1.2.10-8 ES Simultaneous Data Display Workload

Display Item	TCW Item Count	TDW Item Count	Remarks
Data Blocks (no ACID)	275	165	7 alphanumerics each (avg.)
Data Blocks (ACID)	30	18	10 alphanumerics each (avg.)

Display Item	TCW Item Count	TDW Item Count	Remarks
Radar Target Data Target Position Symbol (only) Target Position Symbol Outline Target Extent Symbol Target History Symbol (3 histories)	 300 300 305 915	 180 180 183 549	
System Data Display Alphanumerics per display area	[1]	[1]	
Range Rings	9	6	Circle, 5nmi. Inc. @45nmi. range
Geographic Map Lines	2000	2000	Lines
Geographic Map Symbols	400	400	Single symbol
Geographic Map Arcs	150	150	Single circular arc
Geographic Map Circles	150	150	Circles
Compass Rose	1	1	
Weather Areas	3100	1860	Non-overlapping rectangles, minimum 50% screen coverage

1. The maximum number of FS-2 and FS-2A alphanumerics that the system is capable of generating in compliance with all applicable SSD requirements that define system data display are content and performance.

3.2.1.2.10.4 ES Response Times and Update Rates

3.2.1.2.10.4.1 Response Time and Update Rate Definitions

All response time and update rate requirements **shall[STARS-SSD-01682]** be defined as the values at the 95th percentile.

3.2.1.2.10.4.2 Alphanumeric Input Device Response Time

At any workstation, the time from the input of a character to its display **shall[STARS-SSD-01683]** be less than or equal to 100 milliseconds, while operating with the defined workloads in 3.2.1.2.10.1 and 3.2.1.2.10.3 and maintaining the resource reserves specified in Computer Resources.

3.2.1.2.10.4.3 Pointing Device Actuation Response Time

An indication that a pointing device was actuated **shall[STARS-SSD-01684]** be provided at displays in 100 milliseconds or less after the device is actuated, while operating with the defined workloads in 3.2.1.2.10.1 and 3.2.1.2.10.3 and maintaining the resource reserves specified in Computer Resources..

3.2.1.2.10.4.4 Pointing Device Moving Response Time

An indication that a pointing device was moved **shall[STARS-SSD-01685]** be provided at displays in 100 milliseconds or less after the device is moved, while operating with the defined workloads in 3.2.1.2.10.1 and 3.2.1.2.10.3 and maintaining the resource reserves specified in Computer Resources..

3.2.1.2.10.4.5 Displayed Target Position Accuracy
Excluding external surveillance errors, the displayed relative target position accuracy of single sensor slant range presentation, including all surveillance processing and display errors **shall[STARS-SSD-01686]** be within the greater of 0.125 nmi or 0.4% of range scale.

3.2.1.2.10.4.6 Local ATC Data Display
Local display of target position and data block information **shall[STARS-SSD-01687]** occur within 1.0 second of receipt of target data by the STARS automation subsystem, while operating with the defined workloads in 3.2.1.2.10.1 and 3.2.1.2.10.3 and maintaining the resource reserves specified in Computer Resources..

3.2.1.2.10.4.7 Remote ATC Data Display
Remote display of target position and data block information **shall[STARS-SSD-01688]** occur within 1.0 second of receipt of target data by the STARS automation subsystem, plus measured delay due to GFE communications devices, while operating with the defined workloads in 3.2.1.2.10.1 and 3.2.1.2.10.3 and maintaining the resource reserves specified in Computer Resources.

3.2.1.2.10.4.8 Display of Single Site Event Notifications
Local display at the MCP of single-site event notification **shall[STARS-SSD-01689]** occur within 3 seconds of the occurrence of each event, while operating with the defined workloads in 3.2.1.2.10.1 and 3.2.1.2.10.3 and maintaining the resource reserves specified in Computer Resources..

3.2.1.2.10.4.9 Display of Resource and Performance Verification Report
Local display at the MCP of all resource and performance verification result reports **shall[STARS-SSD-01690]** occur within 5 minutes of the completion of any verification test, while operating with the defined workloads in 3.2.1.2.10.1 and 3.2.1.2.10.3 and maintaining the resource reserves specified in Computer Resources.

3.2.1.2.10.4.10 Local TCP Request Response Times
The functions requested by TCP input from a local workstation **shall[STARS-SSD-01691]** be completed and the results displayed in 1.2 seconds or less, while operating with the defined workloads in 3.2.1.2.10.1 and 3.2.1.2.10.3 and maintaining the resource reserves specified in Computer Resources.

3.2.1.2.10.4.11 Remote TCP Request Response Times
The functions requested by TCP input from a remote workstation **shall[STARS-SSD-01692]** be completed and the results displayed in 1.2 seconds or less, plus measured delay due to GFE communication devices, while operating with the defined workloads in 3.2.1.2.10.1 and 3.2.1.2.10.3 and maintaining the resource reserves specified in Computer Resources.

3.2.1.2.10.4.12 Performance Verification Response Time
Performance verification **shall[STARS-SSD-01693]** be completed within 45 minutes of initiation, while operating with the defined workloads in 3.2.1.2.10.1 and 3.2.1.2.10.3 and maintaining the resource reserves specified in Computer Resources.

3.2.1.2.10.4.13 Map Data Display Update Rate
The map data display update rate **shall[STARS-SSD-01694**] be 1000 lines, 200 symbols, 75 arcs and 75 circles per second, while operating with the defined workloads in 3.2.1.2.10.1 and 3.2.1.2.10.3 and maintaining the resource reserves specified in Computer Resources.

3.2.1.2.10.4.14 Weather Map Update
Any change to the weather map **shall[STARS-SSD-01695]** be displayed at the TCW in 30 seconds or less, while operating with the defined workloads in 3.2.1.2.10.1 and 3.2.1.2.10.3 and maintaining the resource reserves specified in Computer Resources.

3.2.1.2.10.4.15 Service Level Transitions
The change of display between ESL and any other display mode (FSL) information (excluding flight data) **shall[STARS-SSD-01696]** occur in 500 milliseconds or less after the change is initiated by a TCP, while operating with the defined workloads (excluding flight data) in 3.2.1.2.10.1 and 3.2.1.2.10.3 and maintaining the resource reserves specified in Computer Resources.

3.2.1.2.10.4.16 Time for Switching Redundant Resources
Switching the resource state of redundant resources **shall[STARS-SSD-01697]** be accomplished in five (5) seconds or less, while operating with the defined workloads in 3.2.1.2.10.1 and 3.2.1.2.10.3.

3.2.1.2.10.4.17 Switching Application Software
Switching from execution of one version of ES automation application software to execution of another version of ES automation application software with restoration of the service level in effect prior to the switch **shall[STARS-SSD-01698]** take no more than 45 seconds, while operating with the defined workloads in 3.2.1.2.10.1 (exclusive of manually entered messages per Table 3.2.1.2.10-4) and 3.2.1.2.10.3.

3.2.1.2.10.4.18 Switching Adaptation Data
Switching between two ESL site adaptation data sets **shall[STARS-SSD-01699]** take no more than 45 seconds, while operating with the defined workloads in 3.2.1.2.10.1 (exclusive of manually-entered messages per Table 3.2.1.2.10-4) and 3.2.1.2.10.3.

3.2.1.2.10.4.19 Initialization to ESL
Initialization to ESL **shall[STARS-SSD-01700]** be accomplished in the following times or less, while operating with the defined workloads in 3.2.1.2.10.1 (exclusive of manually-entered messages per Table 3.2.1.2.10-4) and 3.2.1.2.10.3, unless the operating system did not recover, excluding ESL M&C functionality:

a. At TCWs and Local TDWs: sixty (60) seconds
b. At Remote TDWs: eighty-four (84) seconds

3.2.1.2.10.4.20 Time from Power Restored to ESL
From the time power is restored, recovery to ESL **shall[STARS-SSD-01701]** be accomplished in the following times or less, while operating with the defined workloads in 3.2.1.2.10.1 (exclusive

of manually-entered messages per Table 3.2.1.2.10-4) and 3.2.1.2.10.3, unless the operating system did not recover, excluding ESL M&C functionality:

a. At TCWs and Local TDWs: sixty (60) seconds
b. At Remote TDWs: eighty-four (84) seconds

3.2.1.2.10.4.21 Recovery Time to Current Service Level
From the time a redundant system resource fails, recovery to ESL level in use at the time of the failure **shall[STARS-SSD-01702]** be accomplished in five (5) seconds or less, while operating with the defined workloads in 3.2.1.2.10.1 and 3.2.1.2.10.3.

3.2.1.2.11 Emergency Service Security
The following security requirements apply to the ES automation equipment.

3.2.1.2.11.1 Identification and Authentication

3.2.1.2.11.1.1 Local Operators

3.2.1.2.11.1.1.1 Identification and Authentication for Operating System Services
Access to operating system services **shall[STARS-SSD-01703]** be available after identification and authentication of the operator.

Maintenance access **shall[STARS-SSD-01704]** be available only upon Identification and Authentication of the operator.

3.2.1.2.11.1.1.2 Authenticate Local Users
The system **shall[STARS-SSD-01705]** identify and authenticate operators by a login operation for operating system services.

Usernames **shall[STARS-SSD-01706]** have at least 6 characters.

3.2.1.2.11.1.1.3 Change Authentication Information
The system **shall[STARS-SSD-01707]** require operators to periodically change authentication information at the time of login.

The maximum period allowed before authentication information should be changed is 90 days.

3.2.1.2.11.1.1.4 Passwords for Local Users
Authentication information (e.g., passwords) **shall[STARS-SSD-01708]** be modifiable by the operator.

3.2.1.2.11.1.2 Protection of Account Passwords
Passwords, when required for access to hosts over the network, **shall[STARS-SSD-01709]** be protected from disclosure during transmission.

3.2.1.2.11.2 Security Audit

3.2.1.2.11.2.1 Create and Maintain Audit Trail
An Audit trail **shall[STARS-SSD-01710]** be created and maintained for identification and authentication (I&A) security events.

3.2.1.2.11.2.2 Traceability
An audit trail **shall[STARS-SSD-01711]** show traceability of an identification and authentication security event to the individual operator on the local system.

3.2.1.2.11.2.3 Protection and Centralization
The security audit trail **shall[STARS-SSD-01712]** be protected from unauthorized modification, access, or destruction.

The security audit trail records **shall[STARS-SSD-01713]** be recorded on non-volatile media in real time on a centralized location within the site.

3.2.1.2.11.2.4 Identification and Authentication Audit Information
The information to be recorded for each operator identification and authentication event **shall[STARS-SSD-01714]** be: operator ID, date, time, success/failure status, and workstation.

3.2.1.2.11.3 Security Administration

3.2.1.2.11.3.1 Operating System Verification
Upon operator request, an operating system software configuration baseline on selected equipment **shall[STARS-SSD-01715]** be generated.

A mechanism **shall[STARS-SSD-01716]** collect the configuration baselines from the selected equipment into the SSS.

Upon operator request, a mechanism **shall[STARS-SSD-01717]** perform a comparison of a collection of configuration baselines with a designated master collection to identify differences.

3.2.1.2.11.3.2 Network Equipment Baseline Verification
Upon operator request, a configuration baseline on selected network equipment **shall[STARS-SSD-01718]** be generated.

A mechanism **shall[STARS-SSD-01719]** collect the configuration baselines from the selected network equipment into the SSS.

Upon operator request, a mechanism **shall[STARS-SSD-01720]** perform a comparison of a collection of network configuration baselines with a designated master collection to identify differences.

3.2.1.3 Operational Site Support Subsystem
The Operational Site Support Subsystem provides the off line support functions needed to maintain the Operational Site.

The Operational Site Support Subsystem hosts the Site Support Service Level (SSSL) as introduced in Section 3.1.1.2. SSSL includes the functionality and performance specified below. Partitioning of the Operational Site into separate Automation (FSL, EFSL, ESL) and Operational Site Support (SSSL) subsystems ensures independent and concurrent operation, as required.

3.2.1.3.1 Interfacility Test Function

The interfacility test function **shall[STARS-SSD-01721]** generate and communicate messages with the Automation Subsystem in order to test its interfacility message processing functionality, test its interfacility interface operation, and measure interfacility message response times.

3.2.1.3.2 Simulation

3.2.1.3.2.1 Target Generation

The system **shall[STARS-SSD-01722]** simulate sensor, multilateration and ADS-B inputs for the purpose of system testing and controller training for FSL in the Automation Subsystem.

The simulation function **shall[STARS-SSD-01723]** inject surveillance data at the radar interface of the FSL CGWs with the capability to simulate full or partial failures and provide notification of corresponding failures to TCPs in the training exercise.

Primary radar and beacon target data with azimuth information and 6 levels of weather **shall[STARS-SSD-01724]** be available for each simulated sensor.

Blip/Scan Ratio and Sensor Noise data **shall[STARS-SSD-01725]** be adjustable for each simulated sensor.

Wind conditions **shall[STARS-SSD-01726]** be able to be turned on and off, adjustable in speed and direction and apply to all aircraft for all simulated sensors.

The ESL system **shall[STARS-SSD-01727]** simulate sensor inputs, injected at the CGW, for the purpose of system testing and controller training.

3.2.1.3.2.2 Simulation Capabilities

The simulation function **shall[STARS-SSD-01728]** provide on-line scenario generation tools and training capability.

TCWs/TDWs in training mode **shall[STARS-SSD-01729]** display and manipulate only training data that will have an identical display as that of an operational position.

The capability of generating system test scenarios **shall[STARS-SSD-01730]** exist when either the system is undergoing a PV test on-line or is off-line and not accepting live system inputs.

The simulator **shall[STARS-SSD-01731]** be capable of executing up to 26 simultaneous scenarios, 24 training, 1 PV & 1 test mode.

The simulator **shall[STARS-SSD-01732]** be configurable to support up to 16 pilot roles per training scenario with a role being able to be assigned to either a TCW/TDW or a GPW.

3.2.1.3.2.3 Simulation Commands

A specific simulation command **shall[STARS-SSD-01733]** exist to perform the following functions:

a. Initialize or change a targets beacon code
b. Designate a target as beacon/radar only or radar/beacon reinforced
c. Set criteria for a tracks update rate based on blip/scan ratio
d. Simulate an Ident for a specific track
e. Enable/disable target position noise in range and azimuth for a specific sensor
f. Inhibit radar or beacon target reports for a specific target for a number of scans
g. Specify the ARTS Quality field in a specific targets report
h. Specify the Target Address or Identification for a Mode S or ADS-B target

Specific ADS-B simulation commands **shall[STARS-SSD-01734]** exist for the following characteristics:

a. Version Number
b. Link Technology Indicator
c. Integrity and Accuracy parameters
d. Pressure Altitude
e. Velocity
f. Emitter Category
g. Target Status

A simulation command **shall[STARS-SSD-01735]** exist to define default and override default equipage for all targets in a scenario, multiple targets based on beacon codes and a single target.

Simulated targets **shall[STARS-SSD-01736]** be established using range/azimuth, X/Y, latitude/longitude coordinates or a TCP selected point.

Simulated target commands **shall[STARS-SSD-01737]** exist to perform the following functions:

a. Create any number of duplicate target reports
b. Terminate one or more specified simulated targets
c. Inhibit a specified target for termination
d. Specify a target for automatic final approach and termination with or without specific airport parameters
e. Create a ring of symmetrically placed targets based in range and number of targets

Simulated movement commands **shall[STARS-SSD-01738]** exist for the following purposes:

a. Initialize or change a targets altitude/speed or altitude/speed change rate
b. Cause targets in a hold pattern at a specified fix to descend an entered distance
c. Initialize or change a targets heading, turn rate or direction
d. Place a target in a hold pattern at a specified fix for a specified turn direction, rate and outbound leg time
e. Place a target in a turn with a specified direction and rate until directed to stop

f. Specify an aircraft proceed to one or multiple fixes, return to a specified flight plan route, proceed to a fix and hold or proceed past the last fix
g. Cause an aircraft to intercept a specified radial from a NAVAID, then automatically change its heading to follow that radial towards or away from the NAVAID
h. Select a target by specifying its call sign, beacon code or slew to its position.

The simulation portion of the STARS system **shall[STARS-SSD-01739]** be capable of the following:

a. Accept an entry from any TCP in the simulation environment regardless of speed
b. Provide entries to adjust the scenario execution speeds of 0,1,2,4,6,8 & 10 and return with 0 being freeze and 1 being normal scenario operations
c. Provide entries to start/terminate a scenario or an aircraft within a scenario
d. Provide entries to set training time without affecting operational time as well as backup a scenario to any time in that scenario
e. Provide entries to enable/disable sensor, multilateration or ADS-B scenario input
f. Executing multiple scenarios concurrently
g. Provide an entry to process a student identity, scenario name, site data file, offset time and playback options simultaneously
h. Provide a list of scenario file names at a TCP
i. Provide an acceptance or rejection response to a simulation command at the TCP with rejection reason if applicable
j. Provide a TCP command to display or remove a simulator pilot window at the TCW/TDW
k. Provide a scenario command to display pre-defined text message at a pilot window or one or many TCPs.

In training or test mode, all simulation commands and operational ATC entries **shall[STARS-SSD-01740]** be accepted, capable of being stored in a scenario and capable of being entered manually while the scenario is executing.

3.2.1.3.2.4 Scenario Characteristics

The simulation function **shall[STARS-SSD-01741]** execute scenario generation tools.

The simulation function **shall[STARS-SSD-01742]** store at least 100 scenarios with an average duration of 60 minutes and define at least 30 aircraft types with default values to model the turn, altitude change, ascent/descent, and speed change rates.

When explicit target control values are entered for a target, the entered value **shall[STARS-SSD-01743]** override default values that were assigned based upon the aircraft type.

Continuous Data Recording (CDR) **shall[STARS-SSD-01744]** capture all events during the execution of a scenario including additional simulation and ATC entries, regardless of the scenario being executed in training or test mode.

Playback of a recorded exercise **shall[STARS-SSD-01745]** cause the entries to be executed at the appropriate time, at the originally entered position with the results displayed at the associated TCP.

3.2.1.3.2.5 Simulate Interfacility Interface

At the start of a training exercise, if FSL or, both FSL and EFSL, are part of that exercise, the FSL system will establish the IFDT connection with the simulator. If only EFSL is part of a training exercise, the EFSL system will establish the IFDT connection with the simulator.

The simulator will be capable of simulating a host ARTCC, an adjacent TRACON, a non-host ARTCC or a host/non-host TRACON. The content of the data messages will be in accordance with the ICD for STARS to ARTCC Interfacility Data Transfer NAS-IC-21058100/H372347.

The simulator **shall[STARS-SSD-01746]** send and receive Interfacility commands with the STARS system as though it were an ARTCC or an adjacent TRACON attached via an Interfacility connection.

Simulator commands **shall[STARS-SSD-01747]** exist to perform all of the interaction associated with flight data between the ARTCC and the STARS system.

While the simulator is acting as the ARTCC it **shall[STARS-SSD-01748]** also provide a visual indication to the situation displays and tabular displays.

Unless inhibited by scenario command, the simulator **shall[STARS-SSD-01749]** automatically accept a pointout, as well as, recall a handoff or pointout if not accepted within a scenario defined period of time.

3.2.1.3.3 Data Reduction and Analysis (DR&A) Data Class Extraction

The DR&A Data Class Extraction function is an Off-line tool that reads previously recorded CDR media and generates an output file that contains the data classes selected by the user.

3.2.1.3.3.1 Selecting Data Reduction Information

Operator input **shall[STARS-SSD-01750]** select previously recorded information for DR&A Data Class Extraction based on data extraction filters.

Operator input **shall[STARS-SSD-01751]** allow the user to specify the data extracted with one or more of the following filter options:

a. Time
b. TCP (interchangeably referred to as Controller Jurisdiction Indicator (CJI))
c. Altitude
d. ACID
e. Mode 2 or 3/A Beacon Code
f. Range
g. Azimuth
h. System Coordinates
i. IF Message Types or Source
j. MCW Message Types
k. Exercise Number
l. Sensor

m. Target Type Filter
n. AIG Message ID
o. Aircraft Address
p. Target Identification
q. Altimeter Station
r. ATPA Approach Volume ID or State

Operator input **shall[STARS-SSD-01752]** select for DR&A Data Class Extraction information recorded from the current or previous two software builds.

3.2.1.3.3.2 Selection of DR&A Data Class Extraction Data Source and Output

Operator input **shall[STARS-SSD-01753]** direct a portion or all of CDR data to, as well as, perform DR&A Extraction from any local or networked disk storage device.

The system **shall[STARS-SSD-01754]** permit record and DR&A activities to occur simultaneously.

3.2.1.3.3.3 DR&A Data Classes

The DR&A function **shall[STARS-SSD-01755]** include CAS spreadsheet.

The DR&A data classes **shall[STARS-SSD-01756]** include the following classes:

1 Report Header Data Class
1A Adaptation Header Data Class
1L FDIO Data Class
2 Keyboard Entries (track/flight plan related) Data Class
2X Response (track/flight plan related) Data Class
3 Keyboard Entries (display presentation change related) Data Class
3X Keyboard Responses (display presentation change related) Data Class
4 Automatic Functions Data Class
5 Raw Target Reports Data Class
5A Raw ADS-B Target Reports Data Class
5H Raw Target Reports Hex Dump Data Class
6 Corrected Target Reports for Display Data Class
6H Corrected Target Reports Hex Dump Data Class
7 Tracking Data Class
7H Tracking Hex Dump Data Class
7PA Proximity Alert Data Class
8 Flight Plan Data Class
9 Interfacility Data Class
10 TFMS Data Class
11 Registration and Collimation Correction Factors Data Class
12 Strobe Data Class
13 MSAW Data Class
14 CA/MCI Data Class
15 Weather Data Class
16 MCW Keyboard Entries Data Class

16X MCW Response Data Class
17 MCW System Status Message Data Class
18 Ghost Data Class
19 Security Data Class
20 AIG Data Class
21 Summarization Statistics Report Data Class
22 System Status Report Data Class
23 Verification Report Data Class
25 FMA Data Class
26 ABPE Data Class
27 ADS-B Statistics Data
28 Aural Alarm Data Class
30 Composite Weather Data Class
31 Target Report Summary Data Class
32 Sensor Status Report Data Class
33 Registration Report Data Class
34 RTQC Check Report Data Class
35 PARROT/PE Report Data Class

3.2.1.3.3.4 Data Class Extraction File Format

The following data classes **shall[STARS-SSD-01757]** each be written to separate files:

a. Summarization Statistics Report Data Class
b. System Status Report Data Class
c. Verification Report Data Class
d. Target Report Summary Data Class
e. Sensor Status Report Data Class
f. Registration Report Data Class
g. RTQC Check Report Data Class
h. PARROT/PE Report Data Class

All other data classes **shall[STARS-SSD-01758]** be written to a single Data Class Extraction File with the following format:

a. Each record will contain all the elements in the order defined for the data class
b. All elements are ASCII text strings
c. Each element in a record will be separated by ASCII “Tab” characters.
d. Each Record will be terminated by an ASCII “Carriage Return” character.

The DR&A Function **shall[STARS-SSD-01759]** output a report containing the Report Header Data Class information, the Adaptation Header Data Class information, and a tabular listing of the following data classes:

a. FDIO Data Class 1L
b. Keyboard Entries (track/flight plan related) Data Class 2
c. Response (track/flight plan related) Data Class 2X
d. Keyboard Entries (display presentation change related) Data Class 3

e. Keyboard Responses (display presentation change related) Data Class 3X
f. Automatic Functions Data Class 4
g. Raw Target Reports Data Class 5
h. Raw ADS-B Target Reports Data Class 5A
i. Corrected Target Reports for Display Data Class 6
j. Tracking Data Class 7
k. Proximity Alert Data Class 7PA
l. Flight Plan Data Class 8
m. Interfacility Data Class 9
n. TFMS Data Class 10
o. Registration and Collimation Correction Factors Data Class 11
p. Strobe Data Class 12
q. MSAW Data Class 13
r. CA/MCI Data Class 14
s. Weather Data Class 15
t. MCW Keyboard Entries Data Class 16
u. MCW Response Data Class 16X
v. MCW System Status Message Data Class 17
w. Security Data Class 19
x. Ghost Data Class 18
y. AIG Data Class 20
z. FMA Data Class 25
aa. ABPE Data Class 26
bb. ADS-B Statistics Data Class 27
cc. Aural Alarm Data Class 28
dd. Composite Weather Data Class 30

3.2.1.3.3.5 Plot File Generation
The DR&A Function **shall[STARS-SSD-01760]** create a Plot File format file.

Each record in the Plot File **shall[STARS-SSD-01761]** contain the following elements (type of record shown for reference only):

Table 3.2.1.3.3-1 Plot File

#	Element	Raw Target Records	Track & Plot Records	TAM Records	Aural Alarm Records
1	Time	X	X	X	X
2	Sensor Name	X	X	X	
3	TAM (end of scan)			X	
4	ACID		X		X
5	Mode 3/A Beacon Code and Validity Indicator	X	X		X
6	Mode 2 Beacon Code and Validity Indicator	X	X		

#	Element	Raw Target Records	Track & Plot Records	TAM Records	Aural Alarm Records
7	Uncorrected Mode C Altitude (100s of ft) and Validity Indicator[1]	X	X		
8	Pressure corrected Mode C Altitude (100s of ft) and Validity Indicator[1]		X		
9	Requested Altitude (100s of ft)		X		
10	Pilot Reported Altitude		X		
11	Mode-C Override		X		
12	Range of Target from Sensor (nm)	X	X		
13	Azimuth of Target from Sensor (ACP's)	X	X		
14	X coordinate (reported) relative to Selected Origin Reference Point (nm)	X	X		
15	Y coordinate (reported) relative to Selected Origin Reference Point (nm)	X	X		
16	Track Number (R for radar input uncorrelated, C for radar input correlated)	X	X		X
17	Track State Indicator[4]		X		
18	Heading (degrees)		X		
19	Speed (knots)		X		
20	TCP		X		X
21	Type of Report – Radar Only, Beacon Only, Radar Reinforced Beacon, Fast Update Sensor	X	X		
22	Arrival/Departure Status – ARR/DEP/OVR		X		
23	Track Condition Indicators – Coast State and SSR Support and Unreasonable Altitude Change Rate[3]		X		
24	Flight Rules		X		
25	Aircraft Category		X		
26	1st Scratch Pad Data		X		
27	2nd Scratch Pad Data		X		
28	Aircraft Type, Equipment Suffix and Number[2]		X		
29	CA Alarm Status and Suppression State		X		
30	MCI Alarm Status and Suppression State		X		
31	MSAW Alarm Status and Suppression State		X		
32	Runway Assignment		X		
33	Departure Airport		X		
34	Destination Airport		X		
35	Entry Fix		X		
36	Exit Fix		X		
37	Special Indicator (Alert SPC's or per adaptation data)	X	X		
38	Ident Indicator (Ident)	X	X		
39	TCP of receiving controller if Target is in Handoff Status. When receiving controller is ARTCC ("C") include receiving sector (if known).		X		
40	Coast Status Indicator		X		
41	Latitude (degrees, minutes, seconds, N or S)	X	X		
42	Longitude (degrees, minutes, seconds, E or W)	X	X		
43	System Wide MSAW Inhibit		X		
44	System Wide CA/MCI and MCI Inhibits		X		
45	Flight Plan Proposed Departure Time		X		
46	Target Quality – Confidence	X	X		
47	Gateway Filtering (G=Geographic/blank=none)	X			

#	Element	Raw Target Records	Track & Plot Records	TAM Records	Aural Alarm Records
48	RNAV Status Indicator[5] – one character or blank		X		
49	Target Address	X	X		
50	Standard Deviation of target's X - position	X			
51	Standard Deviation of target's Y - position	X			
52	Special Purpose Field (DF)	X			
53	Target Identification	X	X		
54	System Area Code/System Identity Code	X	X	X	
55	Target Status	X	X		
56	Emitter Category	X	X		
57[6]	Integrity and Accuracy Parameters	X	X		
58[6]	X coordinate (smoother) relative to Selected Origin Reference Point (nmi)		X		
59[6]	Y coordinate (smoother) relative to Selected Origin Reference Point (nmi)		X		
60	Filtered Heading (degrees)		X		
61	Filtered Speed (knots)		X		
62	Turn Rate		X		
63	Positional Uncertainty		X		
64	Separation Eligibility (Standard/Increased/Non-radar)		X		
65	Track's ADS-B Support (Current/Previous/Never)		X		
66	Aural Alarm Type				X
67	Aural Alarm Action				X
68	ACID 2				X
69	Mode 3/A beacon Code 2				X
70	Track Number 2				X
71	TCP Logical				X
72	TCP Owner 1				X
73	TCP Owner 2				X
74	Data Block Indicators – Bit Mask (DM, CX, FP, IF, AMB,NAT, OLD, Auto HO inhibit)		X		
75[8]	Track Owner's Leader Line Direction		X		

1. Mode C Altitude from Track & Plot Records is unsmoothed.
2. Number of aircraft only included if greater than one, equipment suffix included if available.
3. Coast State is "TRK" or "CST" or blank; SSR Support is "RDR" or blank; Unreasonable Altitude Change is "XXX" or blank.
4. Track State Indicator is "Initiated" or "Tentative", corresponding to either tentative search or delayed tentative search, or "Established" or blank.
5. Indicates the RNAV Status Indicator displayed in the data block or blank if no RNAV Status Indicator was displayed.
6. Set to zero if track not updated by this report
7. for Aural Alarms: Physical TCP
8. Any future elements should be added after this one.

RAPTOR raw target records will include uncorrelated radar only, beacon only, and radar reinforced beacon reports, including PARROTs and PEs. RAPTOR track and plot records will include tracked targets and plots, and their flight plan, MSAW alert, CA/MCI alert, and system

wide inhibit data. RAPTOR TAM (time alignment message) records will indicate end of scan for that sensor.

The DR&A function **shall[STARS-SSD-01762]** present a list of radars and the point of tangency at the site that recorded the CDR data and require the user to select a reference point. This reference point will be used to define the origin position for the "x" and "y" position elements and for the range and azimuth filters.

The DR&A function **shall[STARS-SSD-01763]** allow the user to specify the data extracted with one or more of the following filter options:

a. Time
b. ACID
c. Mode 2 or 3/A Beacon Code
d. Track File Number
e. Exercise Number
f. Sensor
g. Raw Target
h. Track and Plot
i. Range
j. Azimuth
k. TCP
l. Altitude
m. System Area Code/System Identity Code
n. Target Address
o. Target Identification
p. Emitter Category
q. Integrity and Accuracy
r. ADS-B Target Status

The DR&A function **shall[STARS-SSD-01764]** include a Plot/Playback File Header record at the start of the extracted records containing the following information:

a. Date and time of the Plot File creation.
b. Input device.
c. Site ID from Recorded Data.
d. Software Build list from recorded data.
e. Adaptation Build list from recorded data.
f. System Mode from recorded data.
g. System ID from recorded data.
h. System Service Level from recorded data.
i. UTC at start of recorded data.
j. System Time at start of recorded data.
k. User specified comments.
l. Output file path name.

m. Site adapted sensors with their positions in X, Y coordinates relative to the Selected reference Point.
n. Selected reference point in Lat/Long coordinates.
o. Filters selected

3.2.1.3.3.6 DR&A and TCW/TDW CDR File
DR&A **shall[STARS-SSD-01765]** cause specified CDR data to be copied to the SSS hard disk so that it can be used to reconstitute CDR data at a TCW/TDW.

3.2.1.3.3.7 Tracking Performance File Generation
The DR&A Function **shall[STARS-SSD-01766]** create a Tracking Performance File containing the following information with at least one of each of the headers present:

a. Version Header
b. System Parameter Header
c. Radar Parameter Header
d. Radar Data Message
e. Radar Update Message
f. Label Update Message

The Tracking Performance File **shall[STARS-SSD-01767]** have a header defining its type and length and records written in binary data.

Version Header records **shall[STARS-SSD-01768]** contain the following elements:

a. Date and time of the Tracking Performance File creation.
b. Input device.
c. Site ID from recorded data.
d. Software Build list(s) from recorded data.
e. Adaptation Build list(s) and kick list from recorded data.
f. System Mode from recorded data.
g. System ID from recorded data.
h. System Service Level from recorded data.
i. UTC at start of recorded data.
j. System Time at start of recorded data.
k. User specified comments.
l. Output file path name.
m. Filters selected.

System Parameter Header records **shall[STARS-SSD-01769]** contain the following elements:

a. Time Of Record (recorded)
b. Time Of Record (origination)
c. Point Of Tangency - x position
d. Point Of Tangency - y position

e. Point Of Tangency – Latitude
f. Point Of Tangency – Longitude
g. Earth Radius At Point Of Tangency
h. Mosaic Tileset Origin - x position
i. Mosaic Tileset Origin - y position

Radar Parameter Header records **shall[STARS-SSD-01770]** contain the following elements:

a. Time Of Record (recorded)
b. Time Of Record (origination)
c. NUNIO Port Mapping
d. Number of Adapted Sensors

   For each adapted sensor:

   1. Sensor Number
   2. Sensor ID (name)
   3. System Area Code/System Identity Code
   4. High Update Rate
   5. Low Update Rate
   6. Sensor Type
   7. Dynamic Bias Correction Processing Enable/Disable
   8. Sensor - x position
   9. Sensor - y position
   10. Sensor - Height (amsl)
   11. Beta Value
   12. NorthMark Correction
   13. Registration Range
   14. Registration Azimuth
   15. Collimation Range
   16. Collimation Azimuth
   17. Quality Filter Enabled
   18. Confidence Filter Enabled
   19. Quality Filter Threshold
   20. Confidence Filter Value
   21. PSR Range Accuracy
   22. SSR Range Accuracy
   23. PSR Azimuth Accuracy
   24. SSR Azimuth Accuracy
   25. PAM Enabled Indicator
   26. Data Smoothed Indicator
   27. Track Initiation Indicator
   28. Search RTQC Range
   29. Search RTQC Azimuth

30. Beacon RTQC Range
31. Beacon RTQC Azimuth
32. Beacon RTQC Mode 3/A
33. Beacon RTQC Mode C
34. PE #1 Range
35. PE #1 Azimuth
36. PE #2 Range
37. PE #2 Azimuth
38. PE #3 Range
39. PE #3 Azimuth
40. PARROT #1 Range
41. PARROT #1 Azimuth
42. PARROT #1 Mode 3/A
43. PARROT #1 Mode C
44. PARROT #2 Range
45. PARROT #2 Azimuth
46. PARROT #2 Mode 3/A
47. PARROT #2 Mode C

Radar Data Message records **shall[STARS-SSD-01771]** contain the following elements:

a. Time Of Record (recorded)
b. Time Of Record (origination)
c. Data Length
d. Seconds
e. Radar Data

Radar Update Message records **shall[STARS-SSD-01772]** contain the following elements:

a. Time Of Record (recorded)
b. Time Of Record (origination)
c. Coast State
d. Confidence
e. Double Coded
f. Drop Track Flag
g. Dynamic Bias Correction Altitude Bias
h. Dynamic Bias Correction System X Coordinate Bias
i. Dynamic Bias Correction System Y Coordinate Bias
j. Eligibility
k. Eligible Display Modes
l. Exercise Number
m. Flight ACID
n. Flight Plan Associated

o. PARROT Flag
p. PSR Correlated
q. PSR/SSR Combined
r. PE Flag
s. Plot/Track Flag
t. Pressure Corrected filter-Checking Altitude
u. RTQC Flag
v. Radar Heading
w. Radar Reference
x. Radar Speed
y. Registration Eligibility Flag
z. Report State
aa. Reported Mode 2 Code
bb. Reported SSR Code
cc. Reported Altitude
dd. Reported Target Azimuth
ee. Reported Target Range
ff. Special Position Indicator
gg. System Plane X Coordinate
hh. System Plane Y Coordinate
ii. System Track Number
jj. Target Report Time Stamp
kk. Tentative Track Flag
ll. Test Target Flag
mm. Track Not SSR Supported
nn. Track Time
oo. Tracking Eligibility
pp. Uncorrected Altitude Report
qq. Unreasonable Altitude Change Rate
rr. X Velocity Smoothed
ss. Y Velocity Smoothed
tt. Aircraft Address
uu. Target Identification
vv. Time of Day
ww. System Area Code / System Identity Code
xx. Emitter Category

Label Update Message records **shall[STARS-SSD-01773]** contain the following elements:

a. Time Of Record (recorded)
b. Time Of Record (origination)
c. CA Pair Inhibited

d. CA Single Inhibited
e. CA Assigned Altitude Conformance Alert Inhibited
f. CJS
g. Coast State
h. Drop Track Flag
i. Established Altitude
j. Established SSR Code
k. Exercise Number
l. Filtered Speed
m. Filtered Heading
n. Flight ACID
o. Flight Type
p. Flight Plan Associated
q. Local Sourced Track
r. MSAW Inhibited
s. MSAW/CA
t. Radar Reference
u. Report Message Timestamp
v. SPC Code
w. SPC State
x. Smoothed X Coordinate
y. Smoothed Y Coordinate
z. Synthetic Track
aa. System Track Number
bb. Tag Update Request
cc. Track Ambiguity
dd. Track Time
ee. Vertical Velocity
ff. X Smoothed Velocity
gg. Y Smoothed Velocity

The DR&A Tracking Performance File Generation function **shall[STARS-SSD-01774]** allow the user to specify the data extracted by a specified range of time and/or specified exercise number(s).

3.2.1.3.3.8 CDR Data Transfer

The CDR records "live" data to the Recording Capacity Volume (RCV) within each RAID storage device and this volume is sized to hold greater than the current day plus 45 days of recording. There is a buffer area in each RAID storage device called the Imported Data Volume (IDV). The IDV itself is sized to hold, at a minimum, 24 hours of recorded data. Data transfer can occur from an RCV to an IDV, from an external media (e.g. tape) to an IDV, or from an RCV to tape.

The DR&A Function **shall[STARS-SSD-01775]** allow the user to transfer data between any storage media available to that system.

3.2.1.3.4 On-Site Maintenance

3.2.1.3.4.1 Utilities, Tools, and Diagnostics

Utilities and tools **shall[STARS-SSD-01776]** execute to detect and localize software faults and failures.

Diagnostics **shall[STARS-SSD-01777]** execute to detect, and localize to the LRU, hardware faults and failures.

Based on adaptation, utilities and tools **shall[STARS-SSD-01778]** be capable of modifying the MSAW altitude data.

Tools **shall[STARS-SSD-01779]** provide the capability to restore the previous FSL or ESL software and adaptation version.

3.2.1.3.4.2 Software Maintenance

Software run time errors **shall[STARS-SSD-01780]** be detected, localized and reproduced in the environment in which the error occurred.

Pertinent data necessary to analyze faults and failures **shall[STARS-SSD-01781]** be saved after the occurrence of a run time error.

The STARS system **shall[STARS-SSD-01782]** store up to three sets of software and adaptation as well as support the installation of any of these to the system.

The Site Support maintenance subsystem **shall[STARS-SSD-01783]** be capable of performing the following:

a. Transition processors from one System Archive version to another
b. Download a new System Archive Release to the SSS and then to any subsystem computer
c. Create a STARS System Image and switch subsystem computers to that image
d. Generate a replacement processor from a non-operational subsystem computer
e. Initialize the Site Support Server directly from electronic media
f. Download new STARS Installation Data to the SSS and then to any subsystem computer.

3.2.1.3.4.3 Hardware Maintenance

All diagnostic results **shall[STARS-SSD-01784]** be saved for future evaluation.

3.2.1.3.5 Independent Time Source

The Operational Site Support time **shall[STARS-SSD-01785]** be set using GPS time as the source.

3.2.1.3.6 Operational Site Support Performance

The simulation function **shall[STARS-SSD-01786]** concurrently support Training and Test capabilities and support tracked aircraft and flight plans at the workload levels plus an additional 20% simulated aircraft.

3.2.2 SCSC & OSF Support Systems

The STARS maintenance and support system is made up of the STARS Central Support Complex (SCSC) and the OSF Support System. The SCSC provides two primary functions: the field support function and the software development function. The field support function is used to perform Program Technical Report (PTR) analysis and testing, and hardware testing, analysis and configuration management. The software development function is used to develop, modify and test software to resolve problems identified with the existing software baseline or add new functionality to the baseline, to generate software baselines and incremental upgrades, and to perform system level adaptation. The OSF sites perform hardware and software maintenance, including site adaptation and site support, for the STARS Operational Sites. The OSF sites provide support for all STARS Operational Sites.

3.2.2.1 SCSC & OSF Location

The SCSC **shall[STARS-SSD-01787]** be located at the FAA Technical Center (FAATC). The OSF Support System can be located anywhere but is usually near an OSF.

3.2.2.2 SCSC & OSF Maintenance Configurations

The SCSC maintenance subsystem **shall[STARS-SSD-01788]** simultaneously provide a Software Development Configuration (SDC) or Software Maintenance System (SMS) and a Field Support Configuration (FSC) or Terminal Automation System (TAS).

The OSF maintenance subsystem **shall[STARS-SSD-01789]** simultaneously provide a Software Maintenance Configuration (SMC) and a Software Test Configuration (STC).

SCSC software development activities **shall[STARS-SSD-01790]** be autonomous from SCSC field support activities.

3.2.2.3 Software Storage

At least three complete versions of Tools Menu software **shall[STARS-SSD-01791]** be stored on the remote maintenance subsystems non-volatile electronic media.

3.2.2.4 File Format

The SCSC and OSF Support subsystems **shall[STARS-SSD-01792]** be capable to support the loading and storage of both STARS adaptation and software data in normal, compressed, or encrypted format from approved media.

3.2.2.5 SCSC SDC

The SDC **shall[STARS-SSD-01793]** support all software maintenance activities necessary to develop and implement new software releases, perform system wide adaptation, perform software configuration management and develop and implement Software Change Proposals (SCPs).

The SDC **shall[STARS-SSD-01794]** support developmental software activities, including source code generation, editing, compiling, building, debugging, DR&A, and testing of new functions and releases.

The SDC **shall[STARS-SSD-01795]** support the development, testing, implementation and distribution of system-wide STARS adaptations, comprising STARS software and system-wide adaptation files.

The SDC **shall[STARS-SSD-01796]** support the validation and distribution of baseline or incremental software upgrades, and their related documentation, as well as defining and listing content of a package.

The SDC **shall[STARS-SSD-01797]** provide a means to archive, purge and restore a package as well as provide information on the package like user name, date/time and comments.

The SDC **shall[STARS-SSD-01798]** store at least 3 sets of application and maintenance utility source code, CAS component files and adaptation parameter source files on electronic medium.

The SDC **shall[STARS-SSD-01799]** provide Configuration Management of all software and adaptation with the ability to track, display and provide security on all changes.

The SDC **shall[STARS-SSD-01800]** support the identification, analysis, validation, design, development, testing and documentation of Software Change Proposal's (SCP).

The SDC **shall[STARS-SSD-01801]** support all system flash archive creation and maintenance activities necessary to develop and implement new system flash archive releases, perform system flash archive configuration management and develop and implement Software Change Proposals (SCPs).

3.2.2.6 SCSC FSC

The FSC **shall[STARS-SSD-01802]** support all maintenance activities necessary to complete software or hardware discrepancy identification, problem resolution, testing and configuration management, and PTR/Hardware Discrepancy Report (HDR) identification, resolution, and testing.

The FSC **shall[STARS-SSD-01803]** replicate the automation functionality of any site, as well as, collect, maintain, store and support the resolution of PTRs.

An integrated computer-based tool **shall[STARS-SSD-01804]** execute at the SCSC to trace system requirements from the functional/performance requirement level to the computer software unit level and vice versa.

Each STARS automation subsystem **shall[STARS-SSD-01805]** support installation of the site adapted software, contained in a package, on target equipment on the test automation subsystem at the SCSC.

3.2.2.7 OSF SMC

The SMC **shall[STARS-SSD-01806]** support all OSF software maintenance activities necessary to maintain site adaptation, install new software releases, perform DR&A, and identify/verify PTRs.

3.2.2.8 OSF STC

The STC **shall[STARS-SSD-01807]** support all OSF software testing activities necessary to maintain site adaptation, install new software releases, identify & verify PTRs, and be capable of replicating automation functionality of any site.

The STC **shall[STARS-SSD-01808]** support testing, evaluation, validation, and configuration management of site-specific parameter adaptations, including parameter settings and software versions.

The STC **shall[STARS-SSD-01809]** support the capability to accept and release baseline software upgrades and their related documentation via electronic media.

The STC **shall[STARS-SSD-01810]** support the definition and distribution of baseline or incremental software upgrades, and their related documentation, as well as defining and listing content of a package.

The STC **shall[STARS-SSD-01811]** provide a means to archive, purge and restore a package as well as provide information on the package like user name, date/time and comments.

The STC **shall[STARS-SSD-01812]** support the testing of as well as store at least 3 sets of site adapted baseline or incremental software on electronic medium.

The STC **shall[STARS-SSD-01813]** support the verification, data collection, storage, and distribution of Program Trouble Reports (PTRs).

3.2.2.9 Software Maintenance Tools

The SCSC and OSF STARS development environment **shall[STARS-SSD-01814]** support the integration of application software with CAS products and the editing, compiling, building, debugging, and testing of application software.

Tools **shall[STARS-SSD-01815]** execute on the SCSC and the OSF system to support the testing, evaluation, validation and release of application software and CAS.

Each STARS automation system **shall[STARS-SSD-01816]** support installation of the site adapted software, contained in a package at the SCSC.

Tools **shall[STARS-SSD-01817]** execute at the SCSC and OSF system to support to support the following:

a. Configuration Management of the application software, CAS components and site adaptation

b. Selecting an existing adaptation version in order to view the adaptation report for that version
c. Selecting an existing adaptation version in order to compare it to another version
d. Create a duplicate adaptation version from an existing one
e. Deleting an adaptation database
f. Storage and retention of simulation scenarios
g. Configuration Management of PV scenarios by storing generated scenarios together with the software site adaptation.

At least nine independent versions of adaptation management application software **shall[STARS-SSD-01818]** be simultaneously available on both the SCSC and any OSF support system with a tool to ensure the version of software and adaptation are correct.

The adaptation management application software on both the SCSC and the OSF systems **shall[STARS-SSD-01819]** provide the following:

a. Generation of all PV Scenarios from site adaptation parameters and specified PV test cases
b. Storage and retrieval of specified PV test cases within a site adaptation database
c. The capability to specify explicit scenario commands to be included with commands specified within the PV test cases.

Utilities and tools **shall[STARS-SSD-01820]** execute at the SCSC and the OSF Systems to back up system files.

3.2.2.10 Diagnostic Tools

Utilities and tools **shall[STARS-SSD-01821]** execute at the SCSC and the OSF Systems to perform the following:

a. Detect and localize software run time errors and reproduce the environment in which they occurred
b. Detect and isolate the source of software faults and failures
c. Support the analysis and viewing of data
d. Provide a STARS simulation capability per Section 3.2.1.3.2.

Tools **shall[STARS-SSD-01822]** execute at the SCSC and the OSF Systems to support the identification and resolution of PTRs and SCPs.

3.2.2.11 Site Adaptation Tools

Tools **shall[STARS-SSD-01823]** execute at the SCSC and the OSF System to support the following activities:

a. Creation of software site adaptations, including parameter settings and software versions
b. Creation of new adaptation compatible with a specific version of the adaptation management application software
c. Population of a new adaptation database with default values that are not system-wide and do not contain site-specific data
d. Copying and pasting parameters within an adaptation database or between two databases.

Utilities at the SCSC and the OSF Systems **shall[STARS-SSD-01824]** support viewing and entry of adaptation parameters via a graphical user interface, with parameters grouped in accordance with the functional areas they affect.

The screen containing Variable Site Parameters **shall[STARS-SSD-01825]** include only those parameters that are capable of being modified online at the site and contain an initial value that is adaptable.

Tools on the SCSC and the OSF Systems **shall[STARS-SSD-01826]** support the following:

a. Testing, evaluation and validation of software site adaptations, including parameter settings and software versions
b. Searching for adaptation parameters by full or partial name, descriptive word or phrase and present a list of parameters that match the search with names and data entry screens for those parameters
c. The presentation of lists of primary and secondary adaptation parameter database keys for selection.

Utilities at the SCSC and the OSF Systems **shall[STARS-SSD-01827]** support the following digital map capabilities:

a. Interpreting maps in vector format as defined by the STARS Interchange Format Agreement (SIFA)
b. Generation of a map report that includes counts of the map elements contained in each map and the totals for all maps
c. Identification of a map element that exceeds capacity
d. Entering and storing maps at resolutions down to .001 second of latitude and longitude.

Utilities and tools at the SCSC and the OSF Systems **shall[STARS-SSD-01828]** support the following with regard to adaptation reports:

a. Generation of site adaptation reports, including tabular data and the date of changes for graphical data
b. Generation of a report of the differences between two site adaptation reports
c. A "Find" feature as well as the display of an adaptation report
d. Generating a report of adaptation parameter history information for all parameters in an individual data entry screen and for an entire adaptation database.

Utilities and tools at the SCSC and the OSF Systems **shall[STARS-SSD-01829]** support retaining and viewing adaptation parameter history information for tabular and imported data, to include who and when change was made, change number, comments and parameter values before and after change.

The adaptation management application software on the SCSC and the OSF Systems **shall[STARS-SSD-01830]** support the following:

a. Management of both system-wide and site-specific rules adaptation
b. Replacing designated sections of system rules adaptation with site-specific rules adaptation
c. Checking the merged system and site rules adaptation for syntactic and semantic correctness and reporting the results

d. Comparing rules adaptation before and after merging system-wide and site-specific rules
e. Identifying the origin of specific rules adaptation after merging system-wide and site-specific rules.

Tools for the SCSC and the OSF Systems **shall[STARS-SSD-01831]** support the following safety critical adaptation:

a. Displaying geographic safety critical adaptation data graphically, using stereographic projection onto the system plane
b. Displaying and printing combinations of geographic adaptation data in different colors
c. Zooming and panning within the system plane while displaying a specified set of geographic site adaptation data
d. Displaying plots of MSAW, CA and MCI alarms from textual reports of recorded data together with a specified set of geographic site adaptation data
e. Displaying plots of geographic points and altitudes from an AVN Digital Obstacle File together with a specified set of geographic site adaptation data
f. Displaying coordinates in latitude/longitude, terrain map bin, range/azimuth and X/Y range relative to operator selectable sensors and reference points
g. Displaying and printing approach path monitor areas and AVN Digital Obstacle File data in a profile view that is perpendicular to the site system plane
h. Displaying ranges of obstacles from the AVN Digital Obstacle File relative to approach path monitor boundaries, centerlines and origin points
i. Labeling graphical objects with data values and identification from the site adaptation database
j. Comparing two general terrain maps in the site adaptation database, highlighting the bins that are different, and identifying approach path monitor and MSAW/CA areas that overlap with new and modified bins
k. Displaying plots of specific points from textual reports of recorded data together with a specified set of geographic site adaptation data
l. Displaying a point, after defining its latitude and longitude, together with a specified set of geographic site adaptation data
m. Displaying plots of geographic points from an AVN Airport Runway End data file together with a specified set of geographic site adaptation data.

Tools for the SCSC and the OSF Systems **shall[STARS-SSD-01832]** support displaying graphically the geographic location, projected onto the system plane, of the following adaptation data:

a. Maps
b. Approach Monitor Volumes
c. Filters
d. MSAW/CA Areas
e. Runway Pair Configurations
f. Terminal Area Boundaries
g. MSAW General Terrain Map, Radar, Magnetic Variation and Altimeter Tile sets
h. Airports, Facilities, Hospitals and Significant Points
i. Weather Area Boundary
j. System Plane Origin and Point of Tangency

k. Radars
l. Radar PSR/SSR Max Range, PSR Range Filter, Sensor Coverage
m. Test Target, Parrot, PE Locations and Tolerances
n. Reflection Surfaces
o. Uncorrelated Target Areas
p. Target Data Filters
q. Clutter and Blind Zones
r. Range Rings, Display Center, Display Range
s. Sensor Interface Modernization (SIM) Runways, Approach Fixes
t. FMA volumes

Tools for the SCSC and the OSF Systems **shall[STARS-SSD-01833]** support the entry of MSAW/CA Area, Filter, Display Map and Base Geographic Sector data in conjunction with the graphical display of geographic adaptation data, as selected by the user, and projected onto the system plane.

Adaptation tools for the SCSC and the OSF Systems **shall[STARS-SSD-01834]** support:

a. Selecting a subset of adapted sensors
b. Drawing and displaying one or more polygons associated with each adapted sensor's coverage, desired altimeter/airport regions, projected onto the system plane and overlaid on a background of adapted graphical objects, for example maps
c. Automatically assigning up to eight sensors, associated with any polygons that overlap each surveillance/altimeter tile, to the adaptation for that tile
d. Indicating that surveillance/altimeter tiles within polygons overlap more than eight sensors
e. Indicating that surveillance/altimeter tiles within a polygon contain no sensors
f. Assigning a system altimeter reporting station to TCPs via the logical TCP screen
g. Assigning up to six regional altimeter reporting stations to TCPs via the logical TCP screen
h. Assigning up to three adapted altimeter reporting stations and/or an airport to a region
i. Automatically handling overlapping polygons by giving precedence to the polygon(s) with the highest sequence number(s) in the area of an overlap to produce the final output
j. Indicating that one or more tiles within the tile set contain no assigned altimeter reporting station or airport.

3.2.2.12 Hardware Maintenance Tools

Tools at the SCSC **shall[STARS-SSD-01835]** support the identification and resolution of HDR's.

Diagnostics at the SCSC **shall[STARS-SSD-01836]** detect and localize to the LRU, the source of hardware faults and failures.

Tools at the SCSC **shall[STARS-SSD-01837]** test, verify and support configuration management of COTS hardware.

3.2.2.13 SCSC and OSF System Security

The SCSC and OSF systems **shall[STARS-SSD-01838]** identify and authenticate operators by a log-on operation utilizing usernames of at least 6 characters.

In accordance with FAA Order 1370.121 the system **shall[STARS-SSD-01839]** automatically lockout an account after a configurable amount of failed log-on attempts over a configurable time period and periodically require operators to change authentication information.

All authentication information, either local or remote **shall[STARS-SSD-01840]** be modifiable by operators.

All electronically stored passwords and PINs **shall[STARS-SSD-01841]** be protected from disclosure during transmission by using FAA-approved hardware or software tools that are FIPS 140-2 compliant, in accordance with FAA Order 1370.121.

Access **shall[STARS-SSD-01842]** be controlled between each security subject and each security object.

The system **shall[STARS-SSD-01843]** restrict maintenance of operator passwords, allowed functionality and system control commands to an authorized operator.

The SCSC and OSF **shall[STARS-SSD-01844]** be required to be in accordance with CIS Benchmarks where implementation does not impair usability of the system.

In accordance with FAA Order 1370.121 the system **shall[STARS-SSD-01845]** display the official approved FAA System Use Notification Banner each time the user attempts to access an FAA system, and before allowing the user access to the system (including but not limited to all network devices (routers, switches, virtual private network (VPN), etc.), servers, workstations, laptops, tablets).

The system **shall[STARS-SSD-01846]** prevent further changes to operator authentication information for a configurable period of time after the information is changed.

The complexity of operator authentication information, including minimum length, **shall[STARS-SSD-01847]** be configurable.

The system **shall[STARS-SSD-01848]** display a screen saver image and require operator re-authentication after a configurable period of inactivity for a logged-in operator.

3.2.2.14 SCSC and OSF System Security Audit

An audit trail **shall[STARS-SSD-01851]** be created and maintained for all security audit events, with traceability to the individual operator and protect against unauthorized modification, access or destruction.

The following security relevant events **shall[STARS-SSD-01852]** be audited:

a. Successful or unsuccessful operator identification and authentication attempts

b. Successful or unsuccessful external interface identification and authentication attempts
c. Access attempts to security and mission critical objects
d. External inter-process communications failures
e. System administrator and security officer actions

When connected to the FAA Telecommunications Infrastructure (FTI) NAS Operational (OPIP) Network, STARS **shall[STARS-SSD-01853]** integrate with the NAS Cyber Management System (NCMS) to support the NAS Cyber Operations (NCO) enterprise security event monitoring and detection capability, in accordance with FAA Order 1370.114 and FAA Notice 1370.46.

The audit function **shall[STARS-SSD-01854]** provide for the selection of security audit events to be audited for each operator.

The information to be recorded with each security audit record **shall[STARS-SSD-01855]** be: operator ID, operator class, date, time, event type, security object, success/failure status.

The information to be recorded with each operator identification and authentication audit record **shall[STARS-SSD-01856]** be: operator ID, date, time, event type, security object, success/failure status, and workstation.

The audit logs **shall[STARS-SSD-01857]** be viewable at the respective SCSC or OSF System in electronic media with the capability of being filtered by date, time, operator ID, operator class and workstation.

The system **shall[STARS-SSD-01858]** provide a notification for the system administrator of an audit processing failure condition.

The system **shall[STARS-SSD-01859]** retain security audit event records in online storage from a configurable amount of previous days up to the current day.

The system **shall[STARS-SSD-01860]** provide the capability to copy selected security audit event records to removable, portable media.

3.2.2.15 SCSC and OSF System Security Administration

Security administration of the SCSC and OSF Systems **shall[STARS-SSD-01861]** include:

a. The creation and deletion of operator account
b. Selecting security audit events to be audited
c. Generation of security audit reports
d. Management of operator access controls and operator classes

Upon request, a configuration baseline on selected equipment for either the operating system or network equipment **shall[STARS-SSD-01862]** be generated.

A mechanism **shall[STARS-SSD-01863]** collect the operating system or network configuration baselines from the selected equipment into the Central Server and be capable of comparing this to a designated master collection to identify differences.

The system **shall[STARS-SSD-01864]** automatically disable an operator, non-root account that has been inactive for a configurable time period.

The system **shall[STARS-SSD-01865]** automatically delete an operator, non-root account that has been inactive for a configurable time period.

3.2.2.16 SCSC and OSF System Performance

The SCSC and OSF Systems time **shall[STARS-SSD-01866]** be set using GPS time as the source.

The SCSC and OSF Systems **shall[STARS-SSD-01867]** be sized for the implementation of 50 SCP resolutions per year at an average of 300 source lines of code (SLOC) per SCP resolution.

The SCSC and OSF Systems **shall[STARS-SSD-01868]** be sized for the implementation of 200 PTR resolutions per year at an average of 50 (SLOC) per PTR resolution.

The SCSC and OSF Systems **shall[STARS-SSD-01869]** be sized for the implementation and release of one baseline and 12 incremental site adapted software upgrade per year.

3.3 STARS External Interfaces

3.3.1 External Interface Standards

With the exception of the independent time source, any data communications protocol used in vendor defined external system interfaces **shall[STARS-SSD-01870]** comply with EIA, IEEE, ISO, International Telecommunications Union-Telecommunications Standardization Sector (ITU-T), or NIST standards.

3.3.2 Operational Site Interfaces

3.3.2.1 Interface Diagram

The Operational Site will interface to the external systems as shown in Figure 3.3.2.6-1.

3.3.2.2 Digital Surveillance Systems Interface

The STARS surveillance interfaces **shall[STARS-SSD-01871]** accept data from up to the number specified in Table 3.2.1.1.23-1 in any combination of terminal and En Route radars.

For STARS LITE only, the surveillance interfaces **shall[STARS-SSD-01872]** accept data from up to one terminal and one En Route radar.

STARS ELITE TCW/TDWs in DSA mode **shall[STARS-SSD-01873]** accept data from any terminal or En route sensors connected to the system, a single sensor at a time.

A remote location TCW/TDW adapted to support DSF **shall[STARS-SSD-01874]** accept data from any combination of up to two terminal radars.

One primary and one independent backup interface **shall[STARS-SSD-01875]** provide connectivity between each STARS subsystem and each digital surveillance system.

Each terminal surveillance system's interface configured for ASR-11 radar **shall[STARS-SSD-01876]** comply with the modified Common Digitizer (CD-2) format in accordance with NAS-IC-34112105 Airport Surveillance Radar Model 11 (ASR-11) to Standard Terminal Automation Replacement System (STARS) and be adaptable to interpret the range fields in accordance with any one of the following encodings:

a. FAA (MSB=32 nmi, LSB=1/64 nmi)
b. DoD (MSB=64 nmi, LSB=1/32 nmi)
c. Alternative DoD (MSB=128 nmi, LSB=1/16 nmi)

Each terminal surveillance system's interface configured for either ASR-9, ASR-8/TDX-2000 or ASR-8/Common Terminal Digitizer (CTD) digitized radar **shall[STARS-SSD-01877]** be implemented in accordance with NAS-IC-34032105 Airport Surveillance Radar Model 9 (ASR-9) / Standard Terminal Automation Replacement System (STARS) ICD.

Each terminal surveillance system's interface configured for ASR-8/TDX-2000 digitized radars **shall[STARS-SSD-01878]** interpret the range fields for a maximum range of either 64 nmi or 128 nmi, as specified in adaptation.

Each terminal surveillance system’s interface configured for either a network connection to an ASR-11 radar or a WAM ASTERIX virtual radar **shall[STARS-SSD-01879]** comply with the ASTERIX format in accordance with the ASR-11 Radar and the Data Translation Equipment ICD, G710561.

Each En Route surveillance system's interface **shall[STARS-SSD-01880]** be implemented in accordance with NAS-IC-34132105 En Route Surveillance Radar/STARS ICD.

The STARS LITE FDIO interface **shall[STARS-SSD-01881]** be implemented in accordance with NAS-MD-581 FDIO Software ICD via the Echo Port of the Remote Control Unit (RCU) for those messages defined below. All other messages will be accepted and discarded.

Table 3.3.2.2.7-1 Interface Characteristics

Description	Value	Comments
Electrical Interface	RS-232C	Receive only. STARS LITE cannot send anything to FDIO
Connector	9 pin	
Baud Rate	2400	
Protocol	Asynchronous	
Start Bits	1	
Stop Bits	1	
Data Bits	9	8 Bits of data and 1 Parity Bit
Parity	Odd	
Data Format	ASCII 8	To convert to ASCII 7, STARS LITE will use the 7 least significant bits
Start of message character	<STX>	Hex 02

Description	Value	Comments
End of message character	<ETX>	Hex 03
Heartbeat character	<NUL>	Hex 00 – sent approximately every 2.3 seconds to indicate link is still working

Table 3.3.2.2.7-2 Departure Flight Plan (Format 1)

Field Description	Length (# of characters)	Comments
Escape character <ESC>	1	STARS LITE will ignore this character
Preamble	4	STARS LITE will ignore this field
Callsign	2 – 7	Upper case alphanumeric
Horizontal tab <HT>	1	Hex 09
Space	1	Field delimiter
Beacon Code	4 or 0	Numeric digits (0 – 7) if present
Horizontal tab <HT>	1	Hex 09
Space	1	Field delimiter
Fix and airport data	Variable	STARS LITE will ignore this field up to next delimiter
Carriage return <CR>	1	Hex 0D – Field delimiter
Line Feed <LF>	1	STARS LITE will ignore this character
Revision number	0 - 1	Field is empty for new flight plan, numeric digit for flight plan updates
Other data	variable	STARS LITE will ignore this field up to next delimiter
Carriage return <CR>	1	Hex 0D – Field delimiter
Line Feed <LF>	1	STARS LITE will ignore this character
Aircraft type & categorization	2 – 9	Note [1]
Horizontal tab <HT>	1	Hex 09
Space	1	Field delimiter
Flight type	1	Upper case P for departures, A for Arrivals, or E for Overflights
Departure time (hhmm)	4	0000 - 2359
Other data	variable	STARS LITE will ignore this field up to next delimiter
Carriage return <CR>	1	Hex 0D – Field delimiter
Line Feed <LF>	1	STARS LITE will ignore this character
Computer ID (ECID)	3	1 numeric digit followed by 2 upper case alphanumerics
Horizontal tab <HT>	1	Hex 09
Other data	variable	STARS LITE will ignore the rest of the message

Table 3.3.2.2.7-3 Departure Flight Plan (Format 2)

Field Description	Length (# of characters)	Comments
Escape character <ESC>	1	STARS LITE will ignore this character
Preamble	4	STARS LITE will ignore this field
Callsign	2 – 7	Upper case alphanumeric
Horizontal tab <HT>	1	Hex 09
Space	1	Field delimiter
Beacon Code	4 or 0	Numeric digits (0 – 7) if present
Horizontal tab <HT>	1	Hex 09
Space	1	Field delimiter
Flight type	1	Upper case P for departures, A for Arrivals, or E for Overflights

Field Description	Length (# of characters)	Comments
Coordination time (hhmm)	4	0000 - 2359
Horizontal tab <HT>	1	Hex 09
Other data	variable	STARS LITE will ignore this field up to next delimiter
Carriage return <CR>	1	Hex 0D – Field delimiter
Line Feed <LF>	1	STARS LITE will ignore this character
Revision number	0 - 1	Field is empty for new flight plan, numeric digit for flight plan updates
Other data	variable	STARS LITE will ignore this field up to next delimiter
Carriage return <CR>	1	Hex 0D – Field delimiter
Line Feed <LF>	1	STARS LITE will ignore this character
Aircraft type & categorization	2 – 9	Note [1]
Horizontal tab <HT>	1	Hex 09
Other data	variable	STARS LITE will ignore this field up to next delimiter
Carriage return <CR>	1	Hex 0D – Field delimiter
Line Feed <LF>	1	STARS LITE will ignore this character
Computer ID (ECID)	3	1 numeric digit followed by 2 upper case alphanumerics
Horizontal tab <HT>	1	Hex 09
Other data	variable	STARS LITE will ignore the rest of the message

Table 3.3.2.2.7-4 Arrival Flight Plan (Format 1)

Field Description	Length (# of characters)	Comments
Escape character <ESC>	1	STARS LITE will ignore this character
Preamble	4	STARS LITE will ignore this field
Callsign	2 – 7	Upper case alphanumeric
Horizontal tab <HT>	1	Hex 09
Space	1	Field delimiter
Beacon Code	4 or 0	Numeric digits (0 – 7) if present
Horizontal tab <HT>	1	Hex 09
Space	1	Field delimiter
Flight type	1	Always upper case A for arrivals
Coordination time (hhmm)	4	0000-2359
Horizontal tab <HT>	1	Hex 09
Other data	variable	STARS LITE will ignore this field up to next delimiter
Carriage return <CR>	1	Hex 0D – Field delimiter
Line Feed <LF>	1	STARS LITE will ignore this character
Revision number	0 - 1	Field is empty for new flight plan, numeric digit for flight plan updates
Other data	variable	STARS LITE will ignore this field up to next delimiter
Carriage return <CR>	1	Hex 0D – Field delimiter
Line Feed <LF>	1	STARS LITE will ignore this character
Aircraft type & categorization	2 – 9	Note [1]
Horizontal tab <HT>	1	Hex 09
Other data	variable	STARS LITE will ignore this field up to next delimiter
Carriage return <CR>	1	Hex 0D – Field delimiter
Line Feed <LF>	1	STARS LITE will ignore this character
Computer ID (ECID)	3	1 numeric digit followed by 2 upper case alphanumerics
Horizontal tab <HT>	1	Hex 09
Other data	variable	STARS LITE will ignore the rest of the message

Table 3.3.2.2.7-5 Arrival Flight Plan (Format 2)

Field Description	Length (# of characters)	Comments
Escape character <ESC>	1	STARS LITE will ignore this character
Preamble	4	STARS LITE will ignore this field
Callsign	2 – 7	Upper case alphanumeric
Horizontal tab <HT>	1	Hex 09
Space	1	Field delimiter
Beacon Code	4 or 0	Numeric digits (0 – 7) if present
Horizontal tab <HT>	1	Hex 09
Space	1	Field delimiter
Fix and airport data	variable	STARS LITE will ignore this field up to next delimiter
Carriage return <CR>	1	Hex 0D – Field delimiter
Line Feed <LF>	1	STARS LITE will ignore this character
Revision number	0 - 1	Field is empty for new flight plan, numeric digit for flight plan updates
Other data	variable	STARS LITE will ignore this field up to next delimiter
Carriage return <CR>	1	Hex 0D – Field delimiter
Line Feed <LF>	1	STARS LITE will ignore this character
Aircraft type & categorization	2 – 9	Note [1]
Horizontal tab <HT>	1	Hex 09
Space	1	Field delimiter
Flight type	1	Always upper case A for arrivals
Departure time (hhmm)	4	0000-2359
Other data	variable	STARS LITE will ignore this field up to next delimiter
Carriage return <CR>	1	Hex 0D – Field delimiter
Line Feed <LF>	1	STARS LITE will ignore this character
Computer ID (ECID)	3	1 numeric digit followed by 2 upper case alphanumerics
Horizontal tab <HT>	1	Hex 09
Other data	variable	STARS LITE will ignore the rest of the message

Table 3.3.2.2.7-6 Overflight Flight Plan (Format 1)

Field Description	Length (# of characters)	Comments
Escape character <ESC>	1	STARS LITE will ignore this character
Preamble	4	STARS LITE will ignore this field
Callsign	2 – 7	Upper case alphanumeric
Horizontal tab <HT>	1	Hex 09
Space	1	Field delimiter
Beacon Code	4 or 0	Numeric digits (0 – 7) if present
Horizontal tab <HT>	1	Hex 09
Space	1	Field delimiter
Flight type	1	Always upper case E for overflights
Coordination time (hhmm)	4	0000-2359
Horizontal tab <HT>	1	Hex 09
Other data	variable	STARS LITE will ignore this field up to next delimiter
Carriage return <CR>	1	Hex 0D – Field delimiter
Line Feed <LF>	1	STARS LITE will ignore this character
Revision number	0 - 1	Field is empty for new flight plan, numeric digit for flight plan updates

Field Description	Length (# of characters)	Comments
Other data	variable	STARS LITE will ignore this field up to next delimiter
Carriage return <CR>	1	Hex 0D – Field delimiter
Line Feed <LF>	1	STARS LITE will ignore this character
Aircraft type & categorization	2 – 9	Note [1]
Horizontal tab <HT>	1	Hex 09
Other data	variable	STARS LITE will ignore this field up to next delimiter
Carriage return <CR>	1	Hex 0D – Field delimiter
Line Feed <LF>	1	STARS LITE will ignore this character
Computer ID (ECID)	3	1 numeric digit followed by 2 upper case alphanumerics
Horizontal tab <HT>	1	Hex 09
Other data	variable	STARS LITE will ignore the rest of the message

Table 3.3.2.2.7-7 Overflight Flight Plan (Format 2)

Field Description	Length (# of characters)	Comments
Escape character <ESC>	1	STARS LITE will ignore this character
Preamble	4	STARS LITE will ignore this field
Callsign	2 – 7	Upper case alphanumeric
Horizontal tab <HT>	1	Hex 09
Space	1	Field delimiter
Beacon Code	4 or 0	Numeric digits (0 – 7) if present
Horizontal tab <HT>	1	Hex 09
Space	1	Field delimiter
Fix and airport data	variable	STARS LITE will ignore this field up to next delimiter
Carriage return <CR>	1	Hex 0D – Field delimiter
Line Feed <LF>	1	STARS LITE will ignore this character
Revision number	0 - 1	Field is empty for new flight plan, numeric digit for flight plan updates
Other data	variable	STARS LITE will ignore this field up to next delimiter
Carriage return <CR>	1	Hex 0D – Field delimiter
Line Feed <LF>	1	STARS LITE will ignore this character
Aircraft type & categorization	2 – 9	Note [1]
Horizontal tab <HT>	1	Hex 09
Space	1	Field delimiter
Flight type	1	Always upper case E for overflights
Departure time (hhmm)	4	0000-2359
Other data	variable	STARS LITE will ignore this field up to next delimiter
Carriage return <CR>	1	Hex 0D – Field delimiter
Line Feed <LF>	1	STARS LITE will ignore this character
Computer ID (ECID)	3	1 numeric digit followed by 2 upper case alphanumerics
Horizontal tab <HT>	1	Hex 09
Other data	variable	STARS LITE will ignore the rest of the message

Note [1] - The aircraft type and categorization field comprises three separate components in the following order:

1. Component 1 is optional and, if present, consists of a single character followed by a "/".
2. Component 2 - the aircraft type - is mandatory, and consists of 2 to 4 alphanumeric characters.
3. Component 3 is optional and, if present, consists of a "/" followed by a single character.

Table 3.3.2.2.7-8 Delete Flight Plan

Field Description	Length (# of characters)	Comments
Callsign	7	Lower case alphanumeric, trailing space filled
Space	1	Field delimiter
Computer ID (ECID)	3	1 numeric digit followed by 2 upper case alphanumerics
Space	1	Field delimiter
Revision number	1	Space or numeric digit
Space	1	Field delimiter
“remove”	6	Lower case characters as specified
Carriage return <CR>	1	Hex 0D – Field delimiter
Line Feed <LF>	1	STARS LITE will ignore this character
Spaces	variable	STARS LITE will ignore these spaces
“strips”	6	Lower case characters as specified
Other data	variable	STARS LITE will ignore the rest of the message

Table 3.3.2.2.7-9 Modify Aircraft ID in Flight Plan

Field Description	Length (# of characters)	Comments
Callsign (Old ACID)	7	Lower case alphanumeric, trailing space filled
Space	1	Field delimiter
Computer ID (ECID)	3	1 numeric digit followed by 2 upper case alphanumerics
Space	1	Field delimiter
Revision number	1	Space or numeric digit
Space	1	Field delimiter
“new ident”	9	Lower case characters as specified
Carriage return <CR>	1	Hex 0D – Field delimiter
Line Feed <LF>	1	STARS LITE will ignore this character
Spaces	variable	STARS LITE will ignore these spaces
Callsign (New ACID)	2 - 7	Lower case alphanumeric
Carriage return <CR>	1	Hex 0D – Field delimiter
Line Feed <LF>	1	STARS LITE will ignore this character
Supplementary data	variable	Refer to Processing Logic Table 3.3.2.2.7-10, which describes how to check for, and process, updates for multiple fields that are contained in the same FDIO msg.

Table 3.3.2.2.7-10 Modify Time in Flight Plan

Field Description	Length (# of characters)	Comments
Callsign	7	Lower case alphanumeric, trailing space filled
Space	1	Field delimiter
Computer ID (ECID)	3	1 numeric digit followed by 2 upper case alphanumerics
Space	1	Field delimiter
Revision number	1	Space or numeric digit
Space	1	Field delimiter
“time”	4	Lower case characters as specified
Space	1	Field delimiter
Time modifier	variable	Example “+4” to add 4 minutes
Carriage return <CR>	1	Hex 0D – Field delimiter

Field Description	Length (# of characters)	Comments
Line Feed <LF>	1	STARS LITE will ignore this character
Spaces	variable	STARS LITE will ignore these spaces
Fix or airport name	3	Lower case alphanumeric
Spaces	Variable, at least 1	Field delimiter
New time (hhmm)	4	0000 - 2359
Carriage return <CR>	1	Hex 0D – Field delimiter
Line Feed <LF>	1	STARS LITE will ignore this character
Supplementary data	variable	Refer to Processing Logic Table 3.3.2.2.7-10, which describes how to check for, and process, updates for multiple fields that are contained in the same FDIO msg.

Table 3.3.2.2.7-11 Modify Aircraft Type in Flight Plan

Field Description	Length (# of characters)	Comments
Callsign	7	Lower case alphanumeric, trailing space filled
Space	1	Field delimiter
Computer ID (ECID)	3	1 numeric digit followed by 2 upper case alphanumerics
Space	1	Field delimiter
Revision number	1	Space or numeric digit
Space	1	Field delimiter
“type”	4	Lower case characters as specified
Carriage return <CR>	1	Hex 0D – Field delimiter
Line Feed <LF>	1	STARS LITE will ignore this character
Spaces	variable	STARS LITE will ignore these spaces
Aircraft type & categorization	2 - 9	Note [1] above
Carriage return <CR>	1	Hex 0D – Field delimiter
Line Feed <LF>	1	STARS LITE will ignore this character
Supplementary data	variable	Refer to Processing Logic Table 3.3.2.2.7-10, which describes how to check for, and process, updates for multiple fields that are contained in the same FDIO msg.

Table 3.3.2.2.7-12 Modify Beacon Code in Flight Plan

Field Description	Length (# of characters)	Comments
Callsign	7	Lower case alphanumeric, trailing space filled
Space	1	Field delimiter
Computer ID (ECID)	3	1 numeric digit followed by 2 upper case alphanumerics
Space	1	Field delimiter
Revision number	1	Space or numeric digit
Space	1	Field delimiter
“beacon code”	11	Lower case characters as specified
Carriage return <CR>	1	Hex 0D – Field delimiter
Line Feed <LF>	1	STARS LITE will ignore this character
Spaces	variable	STARS LITE will ignore these spaces

Field Description	Length (# of characters)	Comments
Beacon code or "no beacon"	4 or 9	4 numeric digits (0 – 7) if beacon code is assigned. Or lower case characters as specified if no beacon code is assigned
Carriage return <CR>	1	Hex 0D – Field delimiter
Line Feed <LF>	1	STARS LITE will ignore this character
Supplementary data	variable	Refer to Processing Logic Table 3.3.2.2.7-10, which describes how to check for, and process, updates for multiple fields that are contained in the same FDIO msg.

Table 3.3.2.2.7-13 Generic Flight Plan Update

(Flight plan data fields not specifically covered in other tables are not of interest to STARS LITE. However messages may contain a mixture of updates, some of which need to be processed, and some of which do not.)

Field Description	Length (# of characters)	Comments
Callsign	7	Lower case alphanumeric, trailing space filled
Space	1	Field delimiter
Computer ID (ECID)	3	1 numeric digit followed by 2 upper case alphanumerics
Space	1	Field delimiter
Revision number	1	Space or numeric digit
Space	1	Field delimiter
Message type	variable	Lower case alphanumeric
Carriage return <CR>	1	Hex 0D – Field delimiter
Line Feed <LF>	1	STARS LITE will ignore this character
Supplementary data	variable	Refer to Processing Logic Table 3.3.2.2.7-10, which describes how to check for, and process, updates for multiple fields that are contained in the same FDIO msg.

Table 3.3.2.2.7-14 Processing Logic for Supplementary Data in FDIO Message

1)	Read data characters up to and including the next line feed character <LF> or the next end of message character <ETX> is read, or there are no more characters to be read.
2)	If no characters were read then exit.
3)	If a single <ETX> was read then exit.
4)	Discard any leading space characters.

5)	Process remaining data as follows:
	IF (at least 9 characters remain) AND (the characters are "new ident" in lower case)
	THEN
	Process an Aircraft ID field modification per Table 3.3.2.2.7-11
	IF (Aircraft ID field modification was successfully processed)
	THEN return to Step (1)
	ELSE exit
	ELSE IF (at least 4 characters remain) AND (the characters are "time" in lower case)
	THEN
	Process a Time field modification per Table 3.3.2.2.7-12
	IF (Time field modification was successfully processed)
	THEN return to Step (1)
	ELSE exit

	ELSE IF (at least 4 characters remain) AND (the characters are “type” in lower case)
	THEN
	Process an Aircraft Type field modification per Table 3.3.2.2.7-13
	IF (Aircraft Type field modification was successfully processed)
	THEN return to Step (1)
	ELSE exit
	ELSE IF (at least 11 characters remain) AND (the characters are “beacon code” in lower case)
	THEN
	Process a Beacon Code field modification per Table 3.3.2.2.7-14
	IF (Beacon Code field modification was successfully processed)
	THEN return to Step (1)
	ELSE exit
	ELSE
	Discard all remaining characters and return to Step (1).

Table 3.3.2.2.7-15 Flight Plan Aircraft ID Field Supplementary Modification

This table describes a sequence of characters that may be appended to another flight plan update message, to allow for multiple field updates.

Field Description	Length (# of characters)	Comments
Spaces	variable	STARS LITE will ignore these spaces
“new ident”	9	Lower case characters as specified
Carriage return <CR>	1	Hex 0D – Field delimiter
Line Feed <LF>	1	STARS LITE will ignore this character
Spaces	variable	STARS LITE will ignore these spaces
Call sign (New ACID)	2 – 7	Lower case alphanumeric
Carriage return <CR>	1	Hex 0D – Field delimiter
Line Feed <LF>	1	STARS LITE will ignore this character

Table 3.3.2.2.7-16 Flight Plan Time Field Supplementary Modification

This table describes a sequence of characters that may be appended to another flight plan update message, to allow for multiple field updates.

Field Description	Length (# of characters)	Comments
Spaces	variable	STARS LITE will ignore these spaces
“time”	4	Lower case characters as specified
Space	Variable, at least 1	Field delimiter
Time modifier	Variable	Example “+4” to add 4 minutes
Carriage return <CR>	1	Hex 0D – Field delimiter
Line Feed <LF>	1	STARS LITE will ignore this character
Spaces	Variable	STARS LITE will ignore these spaces
Fix or airport name	3	Lower case alphanumeric
Spaces	Variable, at least 1	Field delimiter
New time (hhmm)	4	0000 - 2359
Carriage return <CR>	1	Hex 0D – Field delimiter
Line Feed <LF>	1	STARS LITE will ignore this character

Table 3.3.2.2.7-17 Flight Plan Aircraft Type Field Supplementary Modification

This table describes a sequence of characters that may be appended to another flight plan update message, to allow for multiple field updates.

Field Description	Length (# of characters)	Comments
Spaces	variable	STARS LITE will ignore these spaces
“type”	4	Lower case characters as specified
Carriage return <CR>	1	Hex 0D – Field delimiter
Line Feed <LF>	1	STARS LITE will ignore this character
Spaces	variable	STARS LITE will ignore these spaces
Aircraft type & categorization	2 – 9	Note [1] above
Carriage return <CR>	1	Hex 0D – Field delimiter
Line Feed <LF>	1	STARS LITE will ignore this character

Table 3.3.2.2.7-18 Flight Plan Beacon Code Field Supplementary Modification

This table describes a sequence of characters that may be appended to another flight plan update message, to allow for multiple field updates.

Field Description	Length (# of characters)	Comments
Spaces	variable	STARS LITE will ignore these spaces
“beacon code”	11	Lower case characters as specified
Carriage return <CR>	1	Hex 0D – Field delimiter
Line Feed <LF>	1	STARS LITE will ignore this character
Spaces	variable	STARS LITE will ignore these spaces
Beacon code or “no beacon”	4 – 9	4 numeric digits (0 – 7) if beacon code is assigned. Or lower case characters as specified if no beacon code is assigned.
Carriage return <CR>	1	Hex 0D – Field delimiter
Line Feed <LF>	1	STARS LITE will ignore this character

Each terminal surveillance systems interface configured for Multilateration **shall[STARS-SSD-01882]** be implemented in accordance with NAS-IC-34180001-01 Airport Surface Detection Equipment - Model X (ASDE-X) Multilateration Surveillance Data To Air Traffic Control (ATC) User Subsystem.

Each terminal surveillance systems interface configured for ADS-B **shall[STARS-SSD-01883]** be implemented in accordance with NAS-IC-82530001-01 Surveillance and Broadcast Services (SBS) Service Delivery Point (SDP) to ATC Automation and Service Monitoring User Subsystems.

Each terminal surveillance systems interface configured for Wide Area Multilateration **shall[STARS-SSD-01884]** be implemented in accordance with NAS-IC-82530001-01 Surveillance and Broadcast Services (SBS) Service Delivery Point (SDP) to ATC Automation and Service Monitoring User Subsystems.

3.3.2.3 Number of Terminal/En Route Interfacility Interfaces

STARS **shall[STARS-SSD-01885]** exchange data with NAS En Route systems via the number of ARTCC interfaces specified in Table 3.2.1.1.23-1.

STARS **shall[STARS-SSD-01886]** exchange handoff data with up to the number of adjacent TRACON/RAPCON and Host-Non-Host (HNH) facilities specified in Table 3.2.1.1.23-1 via an ARTCC interface.

The IFDT interfaces **shall[STARS-SSD-01887]** be defined in adaptation.

3.3.2.4 Terminal/En Route Interfacility Interface Characteristics

When the STARS system is "not" adapted as an OCONUS site, the Interfacility interface **shall[STARS-SSD-01888]** be implemented in accordance with NAS-IC-21058100 STARS to ARTCC for IFDT ICD.

When the STARS system is adapted as an OCONUS site, the Interfacility interface **shall[STARS-SSD-01889]** be implemented in accordance with the STARS to APEX for IFDT Outside the US ICD (H372347).

An adaptable parameter **shall[STARS-SSD-01890]** specify whether the interface uses the "Host" message format or the "ERAM" message format.

3.3.2.6 TFMS Interface Characteristics

The TFMS interface **shall[STARS-SSD-01891]** be implemented in accordance with NAS-IC-21052414 STARS / TFMS ICD.

The TFMS interface **shall[STARS-SSD-01892]** be defined in adaptation and exchange data with only one Traffic Management Unit (TMU).

Figure 3.3.2.6-1 Operational Site External Interfaces

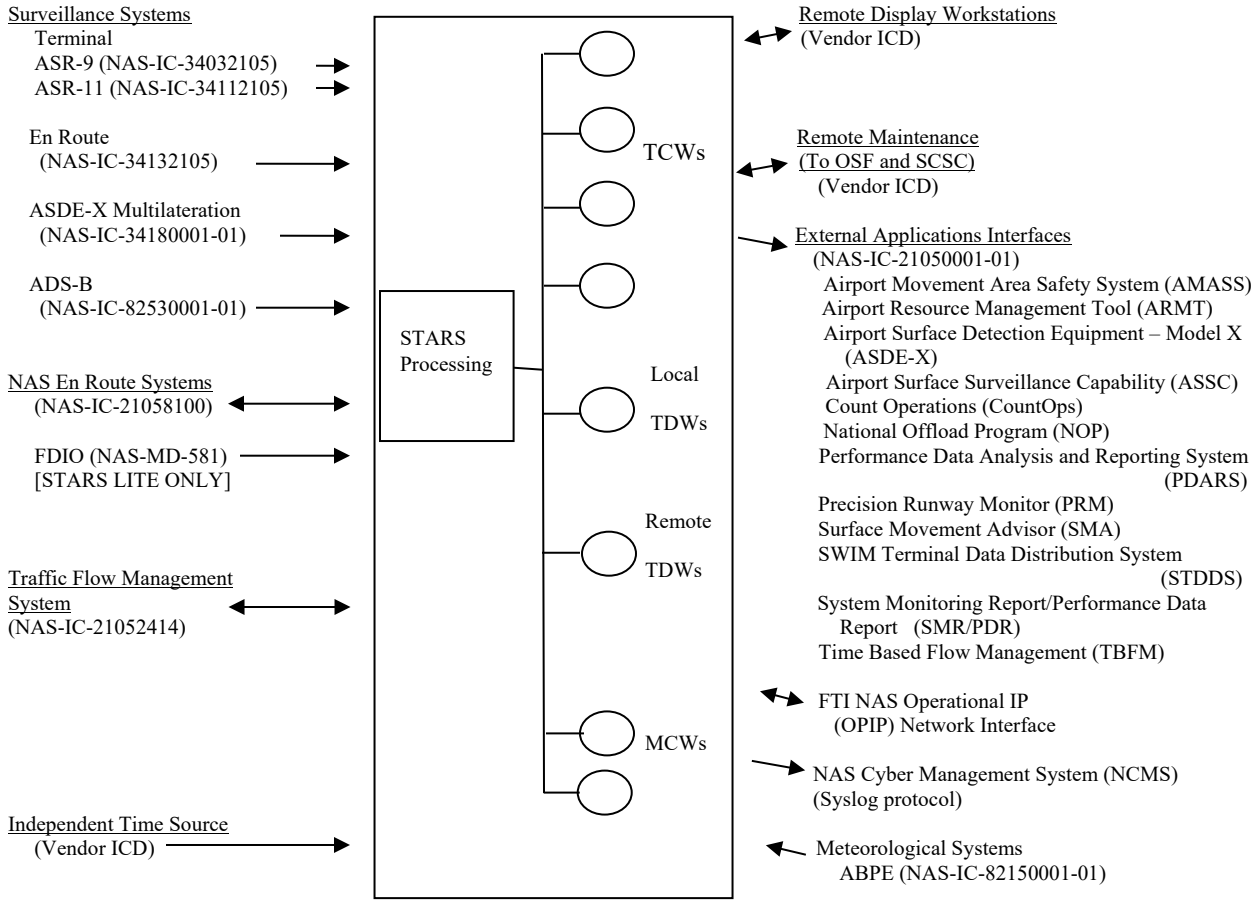

3.3.2.7 Tower Interface

The TDW interface **shall[STARS-SSD-01893]** comply with any standard data communication protocol approved by EIA, IEEE, ISO, ITU-T, or NIST and be implemented in accordance with a vendor ICD.

3.3.2.8 Remote Display Interface

The FSL/EFSL subsystem **shall[STARS-SSD-01894]** interface with up to the number of TCW/TDWs specified in Table 3.2.1.1.23-1 for local and remote towers.

The ESL subsystem **shall[STARS-SSD-01895]** interface with up to the number of TDWs specified in Table 3.2.1.2.10-1 for local and remote towers.

The DSF interface to remote TCW/TDW displays **shall[STARS-SSD-01896]** comply with either NAS-IC-34112105 for ASR-11 using CD-2 format or NAS-IC-34032105 for ASR-9.

The DSF interface to remote TCW/TDW displays **shall[STARS-SSD-01897]** be adaptable to interpret the range fields in accordance with any one of the following encodings:

a. FAA (MSB=32 nmi, LSB=1/64 nmi)
b. DoD (MSB=64 nmi, LSB=1/32 nmi)

c. Alternative DoD (MSB=128 nmi, LSB=1/16 nmi)

3.3.2.10 External Applications Interfaces

The one-way interface external physical path **shall[STARS-SSD-01898]** be provided by the AIG.

STARS training, performance verification, and test data **shall[STARS-SSD-01899]** be excluded from the data transmitted across the AIG operational interfaces.

The STARS AIG **shall[STARS-SSD-01900]** provide the following external systems with an interface utilizing NAS-IC-21050001-01 STARS GeNUS ICD:

a. Precision Runway Monitor
b. Surface Movement Advisor
c. Airport Movement Area Safety System
d. National Offload Program
e. CountOps System
f. Airport Surface Detection Equipment - Model X
g. Time Based Flow Management
h. System Monitoring Report/Performance Data Report
i. Airport Resource Management Tool
j. Airport Surface Surveillance Capability
k. Performance Data Analysis and Reporting System
l. SWIM Terminal Data Distribution System

Each AIG interface **shall[STARS-SSD-01901]** be defined in adaptation and provide continuous connectivity to GFE communications devices.

The security features for the AIG interfaces **shall[STARS-SSD-01902]** be implemented in accordance with the requirements in the following sections:

a. 3.2.1.1.18.2.3 External Systems
b. 3.2.1.1.18.4 Security Audit
c. 3.2.1.1.18.5 Security Administration

The STARS system **shall[STARS-SSD-01903]** receive data from external sources of barometric altimeter settings in accordance with NAS-IC-82150001-01 Digital Altimeter Setting Indicator (DASI) to Terminal Automation Systems.

The STARS system **shall[STARS-SSD-01904]** accommodate up to 16 DASI interfaces.

The system **shall[STARS-SSD-01905]** provide an interface to the FTI OPIP network.

STARS operational data **shall[STARS-SSD-01906]** be excluded from and only a single exercise will be used for the data transmitted across AIG simulation and training interfaces.

The STARS interface to TBFM **shall[STARS-SSD-01907]** also utilize the STARS To And From TBFM ICD, (NAS-IC-21058239)

3.4 STARS Internal Interfaces

All internal interfaces **shall[STARS-SSD-01908]** comply with any standard data communications protocol approved by EIA, IEEE, ISO, ITU-T, or NIST and be implemented in accordance with a vendor defined ICD.

3.5 Adaptation

Software adaptation **shall[STARS-SSD-01909]** be employed to set system-wide and site-specific operational parameters unless a parameter is inherently unique to a site.

Access to change adaptation parameter data **shall[STARS-SSD-01910]** be controlled.

Unless a parameter is unique to a site all other adaptable parameters **shall[STARS-SSD-01911]** be assigned a default value and an acceptable range of values.

All adaptable parameter values **shall[STARS-SSD-01912]** be validated against the acceptable range of values prior to acceptance and implementation with all errors reported to the operator.

Site adaptation changes **shall[STARS-SSD-01913]** be implemented, accepted and employed without the need for software recompilation or reload of the entire operational program.

Parameter validation and data consistency checks performed during the data entry phase **shall[STARS-SSD-01914]** be repeated during the adaptation generation phase.

The Database Management Software (DMS) **shall[STARS-SSD-01915]** support adapting Approach Monitor Zone (AMZ) volumes for Final Monitor Aid (FMA) processing.

A maximum of 32 AMZ volumes each with 2 to 4 parallel runway approaches **shall[STARS-SSD-01916]** be supported.

Adaptation **shall[STARS-SSD-01917]** specify whether each AMZ requires selection of a multilateration sensor and a required working CZ for each AMZ that requires selection of a multilateration sensor.

3.6 Safety

3.6.1 Personnel Safety

The design of system equipment **shall[STARS-SSD-01918]** contain safety features which comply with UL60950 or other appropriate UL standard where UL60950 is not applicable.

The design of system equipment **shall[STARS-SSD-01919]** comply with FAA-G-2100F paragraphs and area of consideration as specified below:

a. 3.3.6.2 - Radio Frequency/Microware, X, and Laser Radiation Limits
b. 3.3.7.1.1 - Noise in Operational Areas
c. 3.3.7.1.2 - Noise in Equipment Areas

3.6.2 Hazardous Materials

All system components, parts and material **shall[STARS-SSD-01920]** conform to the following:

a. Be free of toxic hazards as specified in MIL-STD-1472G, 5.7.9.4
b. Be free of Mercury and Cadmium in any measure
c. Contain no Glass Fiber material which cause skin irritation on the outer surface.

No materials installed in the equipment **shall[STARS-SSD-01921]** emit the following:

a. Gases which combine with the atmosphere to form an acid or corrosive alkali
b. Toxic or corrosive fumes which would be detrimental to the performance of the equipment or health of personnel
c. Gases which produce an explosive atmosphere.

3.6.3 Physical Safety

The system **shall[STARS-SSD-01922]** comply with UL60950, Section 4 and associated subsections or other appropriate UL standard where UL60950 is not applicable.

Enclosures installed in equipment areas **shall[STARS-SSD-01923]** be either seismic zone 4 rated with mechanically latching doors or not seismic rated.

Equipment installed in equipment areas within seismic zone 4 rated enclosures **shall[STARS-SSD-01924]** be mounted in accordance with guidelines in Federal Emergency Management Agency (FEMA) document FEMA 74/September 1994, "Reducing the Risks of Nonstructural Earthquake Damage".

TDW articulated arms **shall[STARS-SSD-01925]** be seismic zone 4 rated per Telcordia GR-63-CORE (Industry-wide Seismic Standard).

3.6.4 Electrical Safety

Electrical systems **shall[STARS-SSD-01926]** comply with UL60950, Section 2 or other appropriate UL standard where UL60950 is not applicable.

3.6.5 Cabling and Connections

All cabling and connections **shall[STARS-SSD-01927]** be installed in such a manner so as not to impede daily operations.

3.6.6 National Electrical Code Adherence

Cable installation **shall[STARS-SSD-01928]** be in accordance with National Electrical Code, NFPA 70.

3.6.7 Fire Resistance

The system **shall[STARS-SSD-01929]** be fire resistant in accordance with UL60950, Section 4.7 or other appropriate UL standard where UL60950 is not applicable.

3.7 Security and Privacy

3.7.1 General Security Requirements

Security aspects of STARS generally follow the guidelines set forth in FAA Order 1370.82, "Information Systems Security Program", with specific Security requirements contained throughout this specification, particularly in sections 3.2.1.1.18, 3.2.1.2.11, 3.2.2.5.10, and 3.2.3.10.

3.8 System Environment

Air filters **shall[STARS-SSD-01930]** comply with FAA-G-2100F, 3.1.3.5.1.

System resources located in the TRACON operations and equipment areas **shall[STARS-SSD-01931]** operate under the ambient conditions listed in FAA-G-2100F, Table III, Environment V, with the following exceptions:

a. Temperature range of 10 degrees to 30 degrees Celsius for all resources.
b. Altitude range of 0 meters to 2000 meters above sea level.

System resources located in the tower cab operations and equipment areas **shall[STARS-SSD-01932]** operate under the ambient conditions listed in FAA-G-2100F, Table III, Environment I, with the following exceptions:

a. Temperature range of 10 degrees to 30 degrees Celsius for all resources except the Tower Display Monitor.
b. Temperature range of 10 degrees to 40 degrees Celsius for the Tower Display Monitor.
c. Altitude range of 0 meters to 2000 meters above sea level.

No system failures or service interruptions **shall[STARS-SSD-01933]** occur due to electrostatic discharge under the following conditions:

a. While in a non-operating state, when subjected to either a voltage discharge of 12 kilovolts (kV), as stored in a 100 pico Farad (pF) capacitor and discharged to the equipment case through a series impedance of 100 ohms, or a transient current with an energy content of 7.2 millijoules.
b. During operation, when subjected to either a voltage discharge of 7 kV, as stored in a 100 pF capacitor and discharged to the equipment case through a series impedance of 500 ohms, or a transient current with an energy content of 2.45 millijoules.

The thermal design of the system **shall[STARS-SSD-01934]** be in accordance with FAA-G-2100F, 3.1.3.5.2, 3.1.3.5.3.

The environmental values for non-operational system equipment **shall[STARS-SSD-01935]** be in accordance with FAA-G-2100F, 3.2.1.2.4 with the following exceptions:

a. Maximum non-operational temperature of 56 degrees Celsius.
b. Minimum non-operational temperature of -30 degrees Celsius.

3.9 Computer Resources

The average measured central processing unit idle time of each processing component **shall[STARS-SSD-01936]** be greater than or equal to fifty percent (50%) when obtained by averaging measurements taken as follows:

a. At 10 second intervals over a one hour period, while operating at the STARS workload and response times defined in Sections 3.2.1.1.23 FS Performance
b. At 10 second intervals over a one hour period, while operating at the STARS workload and response times defined in Sections 3.2.1.2.10 ES Performance
c. At 5 minute intervals over a one hour period, while operating at the STARS workload defined in Table 3.2.1.1.23-3A STARS LITE System Workload, System Data Capacity.

The average utilization of physical random access memory (RAM) for each processing component **shall[STARS-SSD-01937]** be less than or equal to the following:

a. Seventy-five percent while operating at the STARS workload and in compliance with response times defined in Sections 3.2.1.1.23 FS Performance
b. Seventy-five percent while operating at the STARS workload and in compliance with response times defined in Sections 3.2.1.2.10 ES Performance
c. Fifty percent while operating at the STARS workload defined in Table 3.2.1.1.23-3A STARS LITE System Workload, System Data Capacity.

The physical RAM for each processing component **shall[STARS-SSD-01938]** be expandable by at least one hundred percent (100%) of the delivered level by adding plug-in modules.

On-line storage capacity used for all functionality except data recording **shall[STARS-SSD-01939]** be less than or equal to fifty percent of maximum capacity, while operating under the workload and response times conditions defined in Sections 3.2.1.1.23 FS Performance and 3.2.1.2.10 ES Performance.

The average measured utilization as a percentage of total capacity of local area network(s)(LAN) **shall[STARS-SSD-01940]** be less than or equal to fifty percent when obtained by averaging measurements taken at 60 second intervals over a one hour period based on the following:

a. While operating at the STARS workload and response times defined in Sections 3.2.1.1.23 FS Performance
b. While operating at the STARS workload and response times defined in Sections 3.2.1.2.10 ES Performance.

3.10 System Quality Factors

Preventive maintenance on the STARS subsystems **shall[STARS-SSD-01941]** not be required more often than one time every three months nor take more than 2 staff hours by a single individual.

The mean time to repair (MTTR) for all components in the STARS system **shall[STARS-SSD-01942]** be no greater than 0.5 hours with a maximum repair to not exceed 1.5 hours.

The STARS design **shall[STARS-SSD-01943]** preclude any single point failures, excluding TCWs, TDWs or MCWs.

The following components **shall[STARS-SSD-01944]** meet or exceed the specified failure rates:

a. TCW/TDW/MCW – Mean Time Between Failure (MTBF) in hours of 500 for failures less than or equal to 6 minutes for the first Operational Site delivery

b. TCW/TDW/MCW - MTBF in hours of 2,000 for failures less than or equal to 6 minutes for the twentieth Operational Site delivery
c. TCW/TDW/MCW – MTBCF in hours of 7,500 for failures greater than 6 minutes
d. All other components – MTBCF in hours of 5,000 for failures greater than 6 minutes
e. TDW – MTBF of equal to or greater than 2,500 hours, for STARS LITE only.

The system configuration that provides ATC Operational and Monitor & Control Functionality or support **shall[STARS-SSD-01945]** have an inherent hardware availability as follows:
a. STARS FSL - greater than or equal to .999995
b. STARS ESL - greater than or equal to .999995
c. STARS LITE - greater than or equal to .9998
d. STARS FSL & ESL System Support Functionality – greater than or equal to .999
e. SCSC or OSF System – greater than or equal to .999.

The system configuration that provides ATC Operational and Monitor & Control Functionality or support **shall[STARS-SSD-01946]** have an inherent hardware reliability as follows:
a. STARS FSL or ESL – MTBF in hours of 30 for failures less than or equal to 5 seconds for the first Operational Site delivery
b. STARS FSL or ESL – MTBCF in hours of 10,000 for failures greater than 5 seconds for the first Operational Site delivery
c. STARS FSL or ESL – MTBF in hours of 300 for failures less than or equal to 5 seconds for the twentieth Operational Site delivery
d. STARS FSL or ESL – MTBCF in hours of 100,000 for failures greater than 5 seconds for the twentieth Operational Site delivery

The availability of the STARS equipment that supports external interfaces **shall[STARS-SSD-01947]** be as follows:
a. For PRM - not less than 0.999
b. For SMA – not less than 0.99
c. For AMASS – not less than 0.999.

3.11 Design and Construction Constraints

3.11.1 Architectural

The system **shall[STARS-SSD-01948]** provide the capability to add, delete, and adapt hardware and software components to provide new and/or improved functionality, capacity and/or performance without change to the architecture.

The system architecture **shall[STARS-SSD-01949]** provide the capacity to add, delete, or adapt resources in order to implement a tailored terminal automation system with the capacity, functionality and performance required to provide air traffic control service under a specified air traffic load.

3.11.2 Hardware

3.11.2.1 Connectivity and Characteristics

External cable connections, excluding data entry sets and maintenance connections, **shall[STARS-SSD-01950]** be on or accessible from the rear panel from any workstation.

Connections for data entry sets on TCWs or TDWs and maintenance equipment for any workstation **shall[STARS-SSD-01951]** be from the front.

TCWs, TDWs and MCWs **shall[STARS-SSD-01952]** be capable of generating aural signals as specified in Section 3.12.1.3.4.6, Auditory Coding.

Replacement of any workstation data entry device **shall[STARS-SSD-01953]** be accomplished without requiring a restart or reload of any non-workstation hardware or software component.

The graphics controller/generator **shall[STARS-SSD-01954]** provide primitives to support the computer human interface requirements of Section 3.12.1, Computer Human Interface.

All workstations **shall[STARS-SSD-01955]** be capable of displaying a minimum of 256 colors.

3.11.2.2 Keyboard Characteristics

The key configuration and number keys **shall[STARS-SSD-01956]** be of either the QWERTY (Figure 3.11.2.2-3) or ABC (Figures 3.11.2.2-1 and -2) layout with all keyboards connected to the same device being of the same layout.

The Alpha-Numeric keyboards **shall[STARS-SSD-01957]** conform to either MIL-HDBK-1280 Figure 2 or ANSI/HFES 100.

The dimensions, resistance, displacement and separation of keys **shall[STARS-SSD-01958]** be in accordance with Table VII of MIL-STD-1472G.

The slope of keyboards not mounted in a shelf **shall[STARS-SSD-01959]** be 0 to 25 degrees above horizontal, with the preferred slope 0 to 15 degrees.

Shelf mounted keyboards **shall[STARS-SSD-01960]** have a slope of 0 degrees.

The alphanumeric entry device for TCWs/TDWs and GPWs **shall[STARS-SSD-01961]** be available in either non-illuminated or self-illuminated and non-illuminated configurations respectively.

The non-illuminated alphanumeric entry device **shall[STARS-SSD-01962]** be readable under ambient light conditions of 5 foot-candles or greater so that each key is clearly visible.

Alphanumeric entry device illumination **shall[STARS-SSD-01963]** be such that each key is clearly visible in a dark room with the intensity variably controlled from off to full intensity.

The keycap engraving and colors of the ABC keyboard **shall[STARS-SSD-01964]** be in accordance with Figure 3.11.2.2-1 and -2 respectively.

The ABC keyboard keycaps characters **shall[STARS-SSD-01965]** be at least 0.12 inches high and those containing two lines have at least a 0.03 inch separation.

Figure 3.11.2.2-1 Keyboard Menu Key Labels

	CNTR	MAPS	WX	CORE	SIGN ON	BRITE	LDR	CHAR SIZE	SHIFT
DCB	RNG RING	RANGE		PREF SET				SITE	MODE

CLEAR	BACK SPACE	SPACE							ENTER
INIT CNTL	TRK RPOS	TRK SUSP	TERM CNTL	HND OFF	FLT DATA	MULTI FUNC	F8	△	▪
F9	F10	CA	F12	F13	F14	TGT GEN	F16	IFR +	VFR /
A	BCN B	CFG C	DIS D	EMG E	FIL F	G	↖ 1	↑ 2	3 ↗
H	I	J	K	LDR L	MOD M	N	← 4	5	6 →
OFF O	PRE P	Q	R	SYS S	TAB T	U	↙ 7	↓ 8	9 ↘
V	W	X	Y	Z	*	MIN		0	

Figure 3.11.2.2-2 Color of Key Caps and Marking

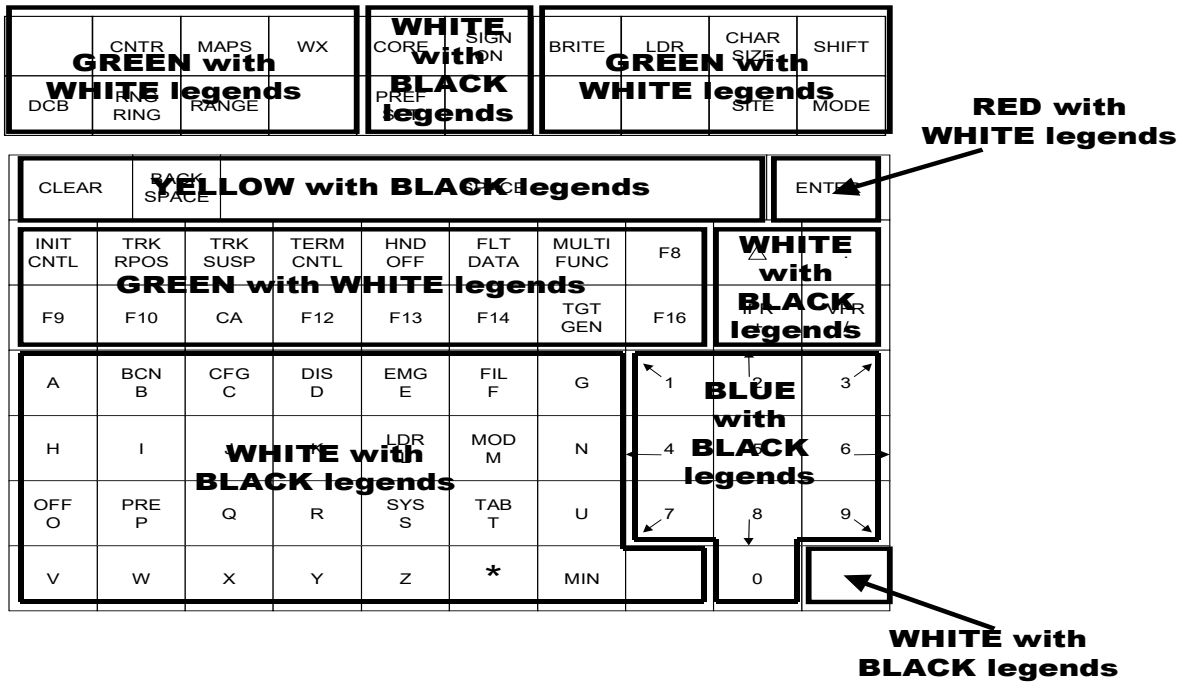

Figure 3.11.2.2-3 QWERTY Keyboard Layout

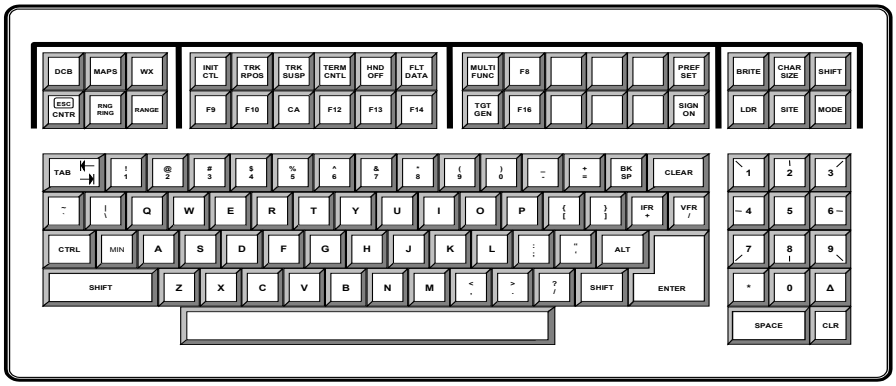

3.11.2.3 Mouse/Trackball Characteristics

A mouse **shall[STARS-SSD-01966]** be capable of being used on any hard flat surface to generate x and y coordinate values which control the position of the cursor on the associated display.

A trackball **shall[STARS-SSD-01967]** be used to generate x and y coordinate values which control the position of the cursor on the associated display.

The mouse/trackball maneuverability **shall[STARS-SSD-01968]** be such that the user can consistently orient the cursor movement within 10 degrees of the desired direction without visual reference.

The mouse/trackball movement **shall[STARS-SSD-01969]** be such that the user can consistently move the mouse/trackball and the associated cursor movement generated will be to the desired location within 15% of the selected display range.

The mouse/trackball **shall[STARS-SSD-01970]** have one or more buttons that provide momentary closure and release inputs to the system.

The mouse **shall[STARS-SSD-01971]** be shaped to allow the user to grasp it using either hand.

3.11.2.4 Special Tools

Special tools **shall[STARS-SSD-01972]** be in accordance with FAA-G-2100F, 3.3.1.3.5.5 and its associated subsections.

3.11.2.5 Terminal Controller Workstation (TCW)

The standard TCW components mounted in and/or on or to an FAA supplied slat-wall or other equivalent means of mounting and housing all the TCW components such that air traffic separation operations can be performed by a controller the same as would be done at a self-contained TCW. This is defined as a Dismounted TCW. Unless specifically noted all other requirements for the self-contained TCW apply to the components of the dis-mounted TCW.

Figure 3.11.2.5-1 shows overall the STARS TCW. Details are specified below.

DCP layout details are specified in Figures 3.11.2.11-2 which takes precedence over this figure.

Figure 3.11.2.5-1 STARS TCW

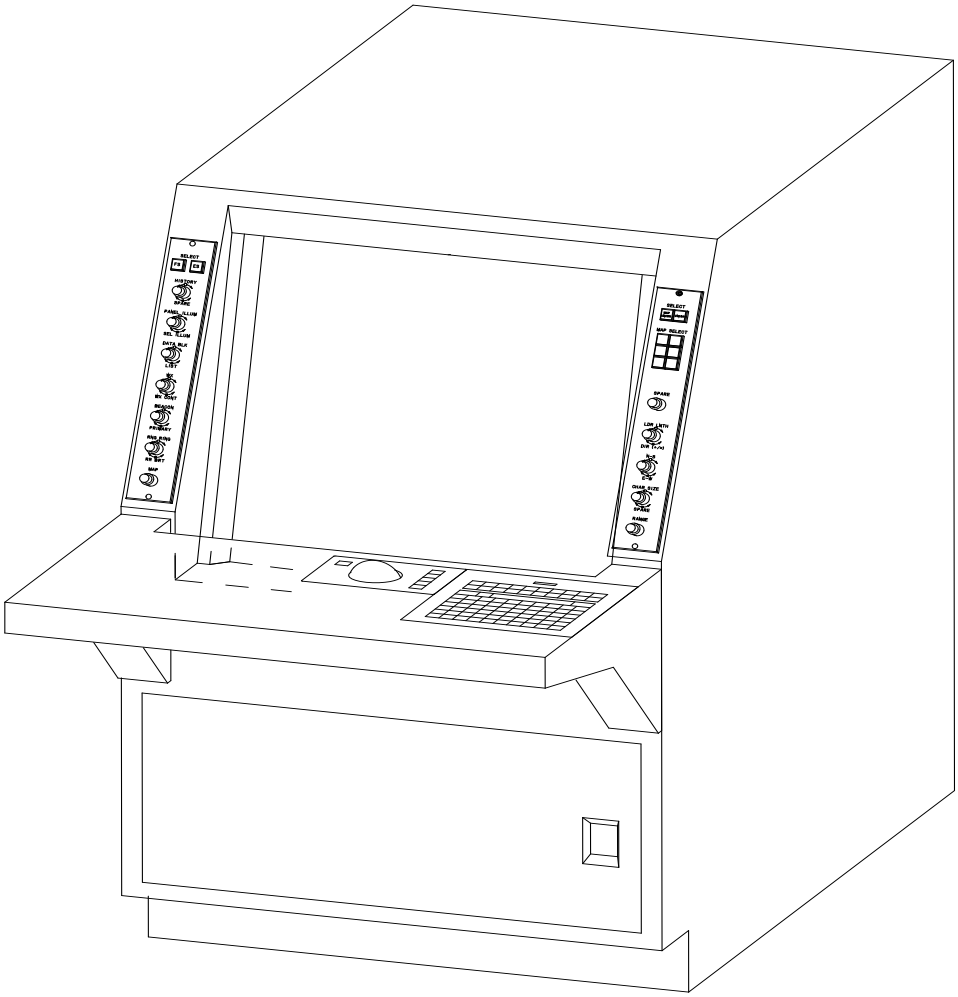

Two versions of the three button trackball **shall[STARS-SSD-01973]** be provided, one that fits into the TCW shelf assembly and the other a free-standing unit both containing trackball buttons of a different color than the surrounding surface.

The left and middle mouse button **shall[STARS-SSD-01974]** be interpreted as the ENTER and Slew/ENTER keys respectively.

A data entry set **shall[STARS-SSD-01975]** contain, at a minimum, a keyboard with "QWERTY" layout per Figure 3.11.2.2-3 or ABC layout per Figure 3.11.2.2-1 and Figure 3.11.2.2-2, and a pointer device.

The TCW **shall[STARS-SSD-01976]** allow for the interface of up to three data entry sets.

A data entry device failure **shall[STARS-SSD-01977]** have no effect on the operation of any other device in the associated data entry set nor on other data entry sets.

The TCW display **shall[STARS-SSD-01978]** have one of the following display resolutions:

a. Minimum of 1280 dots horizontal by 1024 lines vertical with a minimum viewable area of 19 inches diagonally (STARS ELITE only)
b. Minimum of 2048 dots horizontal by 2048 lines vertical with a minimum viewable area of 19.6 inches square.

The TCW **shall[STARS-SSD-01979]** be a self-contained unit with the maximum outline dimensions which allows installation in the TRACON/RAPCON Modular Console specified in FAA-E-2312a, 6.1, having an overall height of less than 48.63 inches with the center line of the monitor to be at 35.35 ± .12 inches. (Exclude for Dismounted TCW)

The TCW display mounting angle **shall[STARS-SSD-01980]** be fixed between 15 and 24 degrees measured with respect to a vertical plane. (Exclude for Dismounted TCW)

The TCW **shall[STARS-SSD-01981]** be designed as follows (Exclude for Dismounted TCW):

a. Mounted on casters or other means to facilitate movement by no more than two people
b. Capable of a swivel movement with a turn radius of less than 60 inches
c. Capability to lock the device in place without facility modification
d. Exhaust air to the rear away from the operator
e. Contain a shelf that is removable with a height adjustment to ensure flush installation with the top of the separator post shelf specified in FAA-E-2312a, Standard Positioning Service (SPS)-1 and SPS-2
f. Provide a writing surface that is covered with a replaceable, non-glare, non-slip material sufficient to accommodate one data entry set and sufficient space for one 8.5" x 11" and one 6” x 9” pad of paper without overhanging the shelf.

TCW installation **shall[STARS-SSD-01982]** allow the operation of TCWs up to 500 physical feet from the TRACON equipment room.

3.11.2.6 TCW/TDW DCP Characteristics

DCPs are optional, but when installed **shall[STARS-SSD-01983]** be in either the TCW or TDW DCP configurations.

The TDW DCPs are optional, but when installed **shall[STARS-SSD-01984]** permit free standing shelf mounting with tilt capability, console mounting with tilt capability, or fixed flush console mounting with either horizontal or vertical labeling configurations, in a single panel configuration no larger than 4 by 16 inches, as shown in Figure 3.11.2.6-3.

Figure 3.11.2.6-1 TCW Display Control Panels

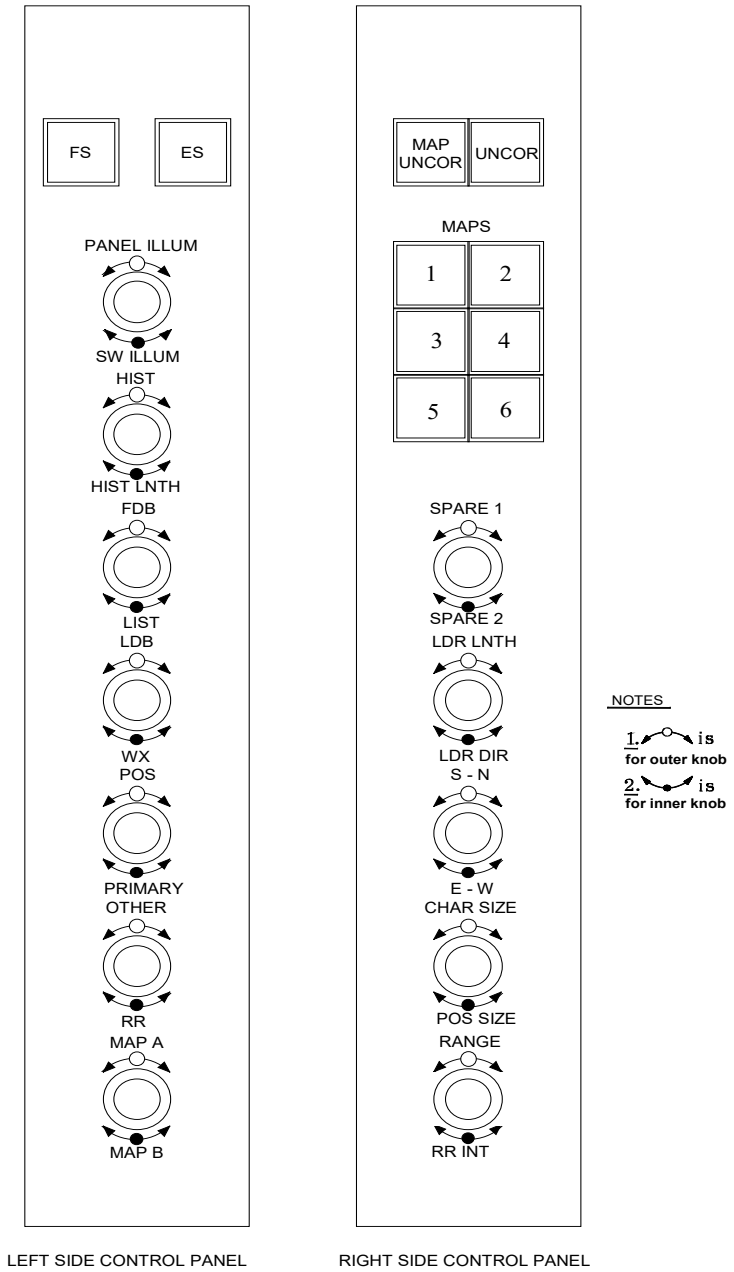

DCP switches **shall[STARS-SSD-01985]** be designed as follows:

a. With variable illumination
b. An on/off state indicated by intensity change
c. White caps
d. Illuminated in a white/yellow color.

Backlighted labels on the DCP **shall[STARS-SSD-01986]** be in accordance with Figure 3.11.2.6-2 for TCWs and Figure 3.11.2.6-3 for TDWs.

Figure 3.11.2.6-2 Backlit Panel

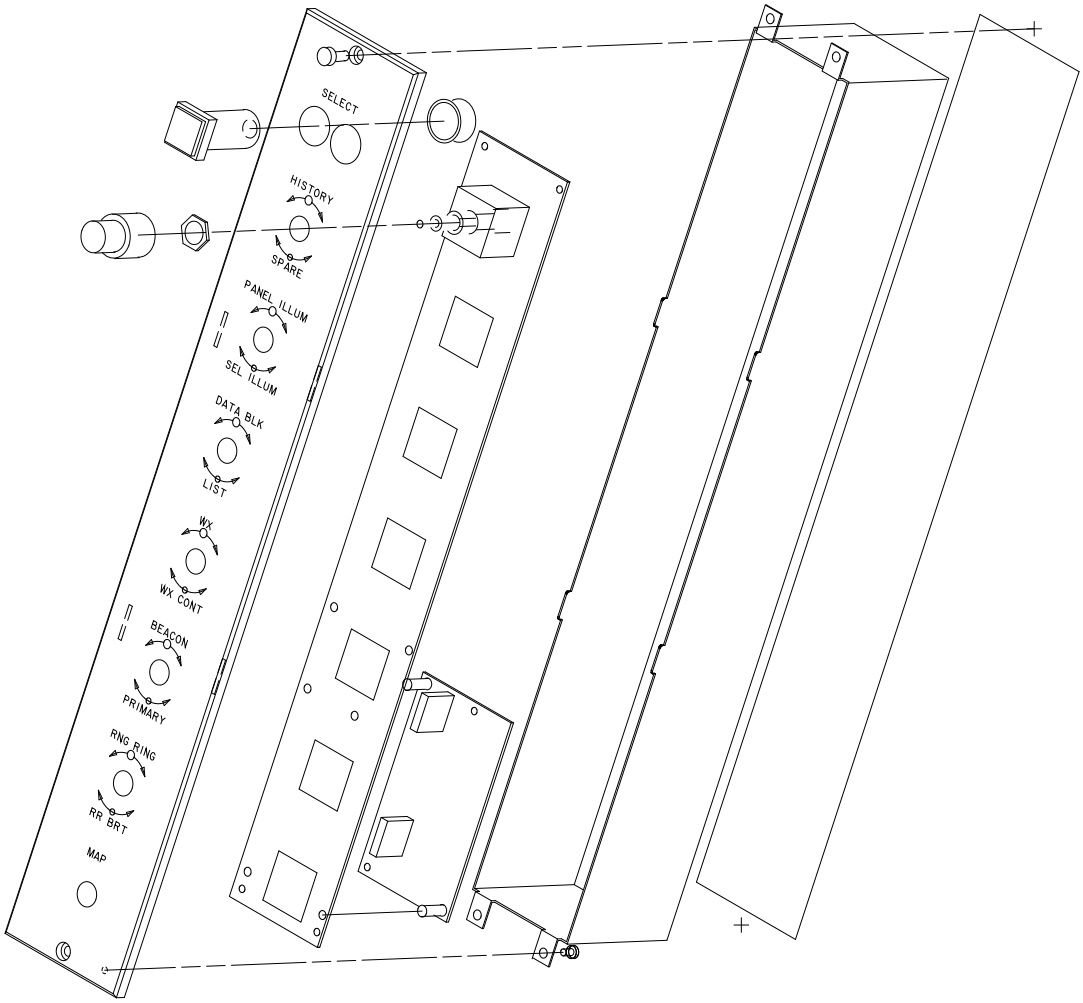

The DCP **shall[STARS-SSD-01987]** be designed as follows:

a. The label backlighting will use a green-yellow color
b. The knobs will be made a matte finish with a gray outer and black inner color
c. All mounting hardware will be matte black
d. The knobs will have 32 ± 3 detents per revolution and permit continuous rotation
e. There will be at least 1.25 inch clearance between outer DCP knobs
f. A single function knob will be concentric and have the inner and outer knobs locked together
g. A dual function knob will be concentric with a .5 inch nominal inner and .7 inch nominal outer diameter

Each DCP **shall[STARS-SSD-01988]** be removable as a subassembly.

The TCW DCPs **shall[STARS-SSD-01989]** include knobs and switches arranged into two panels, one on each side of the display, in accordance with Figures 3.11.2.5-1 and 3.11.2.6-1.

The left TCW DCP (See Figure 3.11.2.5-1 and 3.11.2.6-1) **shall[STARS-SSD-01990]** contain the following with functions in parentheses where included:

a. Mode Select Switches:
    - One (1) FS
    - One (1) ES
b. Concentric Knob:
    - Outer Knob - Panel Illumination (Label backlighting brightness control)
    - Inner Knob - Select Illumination (Switch brightness control)
c. Concentric Knob:
    - Outer Knob - History Brightness
    - Inner Knob - History Length
d. Concentric Knob:
    - Outer Knob - Full Data Block Brightness
    - Inner Knob - Tabular List Brightness
e. Concentric Knob:
    - Outer Knob - Limited Data Block Brightness
    - Inner Knob - Weather Brightness
f. Concentric Knob:
    - Outer Knob - Position Symbol Brightness
    - Inner Knob - Primary Brightness
g. Concentric Knob:
    - Outer Knob - Other - Unowned FDB Brightness
    - Inner Knob - Range Ring Brightness
h. Concentric Knob:
    - Outer Knob -Map A
    - Inner Knob -Map B

The right TCW DCP (See Figure 3.11.2.5-1 and 3.11.2.6-1) **shall[STARS-SSD-01991]** contain the following with functions in parentheses where included:

a. Radar Data Select Switches:
    - One (1) MAP UNCOR
    - One (1) UNCOR
b. Six (6) Map Select Switches
c. Concentric Knob:
    - Outer Knob - Spare 1
    - Inner Knob - Spare 2
d. Concentric Knob:
    - Outer Knob - Leader Length
    - Inner Knob - Leader Direction
e. Concentric Knob:
    - Outer Knob - South/North De-Centering
    - Inner Knob - East/West De-Centering

f. Concentric Knob:
    - Outer Knob - Character Size (all data blocks)
    - Inner Knob - Character Size(position symbols)
g. Concentric Knob:
    - Outer Knob – Range
    - Inner Knob - Range Ring Interval

The tower Display Control Panel **shall[STARS-SSD-01992]** contain the following controls (labels are as shown in Figure 3.11.2.6-3):

a. Switches (located on left side of horizontal panel or top of vertical panel):
    1. Mode Select Switches
        - One (1) FS
        - One (1) ES
    2. Radar Data Select Switches
        - One (1) MAP UNCOR
        - One (1) UNCOR
    3. Six (6) Map Select Switches
b. Controls
    1. Display Backlight Control (potentiometer or slider) - DISPLAY BRIGHTNESS
c. Concentric Encoders (located in bottom row of horizontal panel or left column of vertical panel):
    1. Concentric Encoder
        - Outer Knob – History Brightness
        - Inner Knob – History Length
    2. Concentric Encoder
        - Outer Knob – Full Data Block Brightness
        - Inner Knob – Tabular List Brightness
    3. Concentric Encoder
        - Outer Knob – Limited Data Block Brightness
        - Inner Knob – Weather Brightness
    4. Concentric Encoder
        - Outer Knob – Position Symbol Brightness
        - Inner Knob – Primary Brightness
    5. Concentric Encoder
        - Outer Knob – Other – Unowned FDB Brightness
        - Inner Knob – Range Ring Brightness
    6. Concentric Encoder
        - MAP A
        - MAP B
d. Concentric Encoders (located in top row of horizontal panel or right column of vertical panel):
    1. Concentric Encoder
        - Outer Knob – Panel Illumination (Label backlighting brightness control)
        - Inner Knob – Switch Illumination (Switch brightness control)
    2. Concentric Encoder

- Outer Knob – Spare 1
- Inner Knob – Spare 2

3. Concentric Encoder
    - Outer Knob – Leader Length
    - Inner Knob – Leader Direction
4. Concentric Encoder
    - Outer Knob – South/North De-Centering
    - Inner Knob – East/West De-Centering
5. Concentric Encoder
    - Outer Knob – Character Size (all data blocks)
    - Inner Knob – Character Size (position symbols)
6. Concentric Encoder
    - Outer Knob – Range
    - Inner Knob – Range Ring Interval

Figure 3.11.2.6-3 TDW DCP Configuration Options

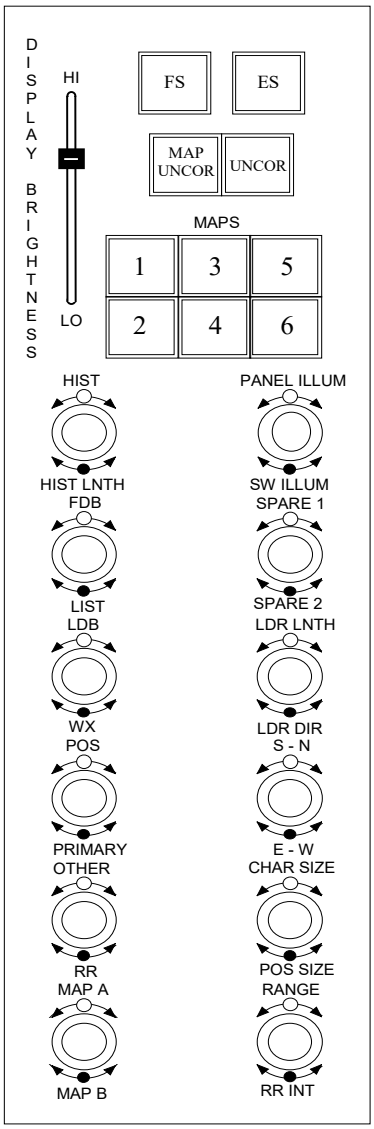

VERTICAL DISPLAY CONTROL PANEL

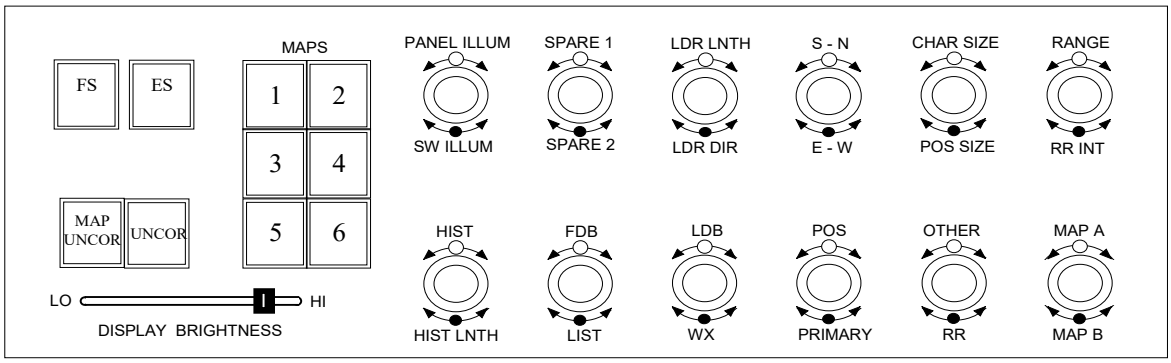

HORIZONTAL DISPLAY CONTROL PANEL

3.11.2.7 TCW/TDW Characteristics

Interfaces for the digital control knobs (pulse generators) and switches **shall[STARS-SSD-01993]** use a standard serial interface.

A message **shall[STARS-SSD-01994]** be sent whenever there is a change in a knob setting or a switch is depressed.

The panel control electronics **shall[STARS-SSD-01995]** be integrated with the display control panels.

The display bezel for TCWs **shall[STARS-SSD-01996]** fit closely such that foam gasket material is not needed with the top display bezel beveled down.

3.11.2.8 Monitor and Control Workstation (MCW)

The MCW **shall[STARS-SSD-01997]** at a minimum contain a keyboard with standard "QWERTY" layout, a pointer device, a display resolution of 1920 x 1200 and a usable display area of 18.65 by 11.65 inches.

The MCW display and data entry devices **shall[STARS-SSD-01998]** have provisions to enable mounting in a desk top or mobile position, with the capability to be installed up to 500 feet from the TRACON or tower equipment room.

All qualified MCW displays **shall[STARS-SSD-01999]** be interchangeable with respect to replacement.

3.11.2.9 Tower Display Workstation (TDW)

The TDW ABC keyboard and trackball layout and functionality **shall[STARS-SSD-02000]** be identical to that of the TCW with mounting options of either free standing enclosure or flush mounted.

Two versions of the three button trackball **shall[STARS-SSD-02001]** be provided, one that permits mounting in the tower console shelf, the other that is a free-standing unit with both interpreting the left button as the ENTER key.

An option **shall[STARS-SSD-02002]** be provided to attach the free-standing trackball to either side of the keyboard.

The trackball buttons **shall[STARS-SSD-02003]** be a different color than the surrounding surface.

A data entry set **shall[STARS-SSD-02004]** contain, at a minimum, a keyboard with "QWERTY" layout per Figure 3.11.2.2-3 or ABC layout per Figure 3.11.2.2-1 and -2, and a pointer device.

A data entry set **shall[STARS-SSD-02005]** contain, at a minimum, a keyboard with standard COTS "QWERTY" layout and a pointer device. (STARS LITE only)

The TDW **shall[STARS-SSD-02006]** allow for the interface of up to three data entry sets with a single set being capable of fitting on the shelf of a typical tower cab console as presented in FAA Order 6480.7C, Appendix 3, figure 18.

An articulated ceiling mount **shall[STARS-SSD-02007]** be available that provides vertical adjustment of at least 18 inches, a lateral adjustment anywhere within a minimum of a 40 inch radius, 180 degree arc about the center post, a monitor tilt range between 0 and at least 30 degrees and swivel capability of +/- 90 degrees minimum for the flat panel display.

It **shall[STARS-SSD-02008]** be possible to mount the flat panel display to an existing DBRITE ceiling track or post, a freestanding table top mount with at least 30 degree tilt and +/- 90 degree swivel or a console mount with a variable tilt up to 30 degrees where 0 degrees is the angle of the console.

An on/off switch for the flat panel display **shall[STARS-SSD-02009]** be accessible when mounted in the existing console.

3.11.2.10 Tower Display Monitor (TDM) Characteristics

The TDW **shall[STARS-SSD-02010]** have a minimum display resolution of 1280 by 1024, with a minimum usable display area of 192 square inches, utilizing a flat panel, containing an on/off switch on the monitor and covering any other maintenance controls located on the front panel.

The display on axis video Contrast Ratio (CR) **shall[STARS-SSD-02011]** be greater than 6:1 for all ambient brightness conditions up to and including 6000 foot-candles incident illumination, normal to the screen, when video output is a flat white field using the following equation.

$$CR = 100 * \frac{\text{Video Output + Background Brightness}}{\text{Background Brightness}}$$

Outer surface reflectivity through 400nm-700nm range (VIS) **shall[STARS-SSD-02012]** be less than 0.25%.

The monitor brightness **shall[STARS-SSD-02013]** be at least 600 nits measured at screen center with a white background.

3.11.2.11 Supplemental Display

The TDW **shall[STARS-SSD-02014]** have the capability to interface with a supplemental display for the purpose of displaying the entered data and tabular data.

The supplemental display **shall[STARS-SSD-02015]** have a minimum usable display area of 8 inches by 6 inches.

All qualified TDW supplemental display monitors **shall[STARS-SSD-02016]** be interchangeable with respect to replacement.

The supplemental display **shall[STARS-SSD-02017]** include a freestanding table top mount and also be capable of console mounting.

3.11.2.12 TDW Distance Limitations

Collocated tower installation **shall[STARS-SSD-02018]** allow the placement of TDW(s) up to 5000 feet from the TRACON equipment room.

Collocated tower installation **shall[STARS-SSD-02019]** allow the placement of TDW(s) up to 15,000 feet from the TRACON equipment room (STARS ELITE only).

TDW installation **shall[STARS-SSD-02020]** allow the placement of display and data entry devices up to 500 feet from the associated TDW's processing equipment.

A 4-way distribution amplifier/splitter **shall[STARS-SSD-02021]** be available to permit putting the same image on up to four display monitors, where each display is within 25 cable feet of the splitter, including Supplemental Displays for systems with the exception of STARS LITEs.

3.11.2.13 Miscellaneous Hardware

A General Purpose Workstation (GPW) data entry set **shall[STARS-SSD-02022]** contain, at a minimum, a keyboard with standard “QWERTY” layout and a pointer device.

The GPW display **shall[STARS-SSD-02023]** have a minimum display resolution of 1280 by 1024, with a minimum usable display area of 14.375 by 11.5 inches.

All qualified GPW displays **shall[STARS-SSD-02024]** be interchangeable with respect to replacement.

If a page printing device is provided, it **shall[STARS-SSD-02025]** be controllable according to the conventions identified in the Adobe Systems PostScript (TM) standard, ASCII capable, interchangeable with any other qualified device and capable of supplying a notification for paper refill to the MCP.

If a plotter is provided, it **shall[STARS-SSD-02026]** be supported and capable of producing E-size documents.

The independent calibrated national standard time source **shall[STARS-SSD-02027]** have an accuracy relative to Coordinated Universal Time (UTC), as received from the Navstar GPS constellation, of within 1 msec.

Hardware component configurations and equipment layout **shall[STARS-SSD-02028]** permit LRU replacement without interruption of FSL or ESL, provide clear and unrestricted access for service, replacement, adjustments, test points, terminals and wiring.

3.11.3 Software

Data dictionary/directory implementations **shall[STARS-SSD-02029]** comply with FIPS 156, Information Resource Dictionary Systems.

SQL processors **shall[STARS-SSD-02030]** comply with FIPS 127-2, Database Language SQL.

Client-server operations **shall[STARS-SSD-02031]** be based on x-windows.

Computer network services **shall[STARS-SSD-02032]** comply with FIPS 146-2, Profiles for Open Systems Internetworking Technologies (POSIT).

Operating System **shall[STARS-SSD-02033]** comply with the Portable Operating System Interface (POSIX) and/or Linux Standard Base (LSB) specifications per:

a. IEEE 1003.1 Portable Operating System Interface (POSIX)
b. ISO/IEC 9945 Portable Operating System Interface (POSIX) Base Specifications
c. ISO/IEC 23360 Linux Standard Base (LSB) Core Specification

C language processors **shall[STARS-SSD-02034]** comply with FIPS 160C.

All modifications or additions to automation application software, as well as, all newly developed utilities, tools and diagnostics **shall[STARS-SSD-02035]** be written in the HOL that is predominant in the majority of the existing automation application software code and complies with the FIPS standards as specified above.

Commercially Available Software (CAS) **shall[STARS-SSD-02036]** be used without modification to the source code.

The method of entry, usage and acceptable values for all parameters used to configure a CAS component **shall[STARS-SSD-02037]** be documented.

3.11.4 Firmware

Any non-volatile storage device used for STARS application code storage **shall[STARS-SSD-02038]** be reprogrammable and not require the device be removed to reprogram.

3.11.5 Electrical

Electrical wiring used in the system **shall[STARS-SSD-02039]** be in accordance with FAA-G-2100F, 3.1.2.1.

All Alternating Current (AC) supply line circuits and parts **shall[STARS-SSD-02040]** be in accordance with FAA-G-2100F, 3.1.2.2 and its associated subsections. As an alternative to FAA-G-2100F 3.1.2.2.5, equipment connected by cord and plug to line power may be disconnected by means of the plug.

All system circuit protection **shall[STARS-SSD-02041]** be in accordance with FAA-G-2100F, 3.1.2.3.

STARS equipment **shall[STARS-SSD-02042]** accept power from a power source designed in accordance with FAA-G-2100F, 3.1.2.4 and its associated subsections.

Lightning protection, grounding, bonding, shielding, transient protection, and personnel protection **shall[STARS-SSD-02043]** be in accordance with FAA-STD-19E, sections 4.3.4.1 and 4.3.5.2 with the exception of pre-existing equipment not equipped with grounding capability and all new equipment will be equipped with grounding capability with the following exceptions:

a. Any commercial product enclosed in a plastic case for which there are no readily available alternatives
b. Circuit/component cards within a grounded chassis
c. Components powered by DC, USB or other low voltage device.

Primary power for equipment, except for the tower cab area, **shall[STARS-SSD-02044]** be facility input power of 120 VAC or 208 VAC with voltage and frequency ranges as specified in FAA-G-2100F, 3.2.1.3, Table IV.

Primary Power for equipment in the tower cab **shall[STARS-SSD-02045]** be facility input power of 120 VAC with voltage and frequency ranges as specified in FAA-G-2100F, 3.2.1.3, Table IV.

All electrical equipment **shall[STARS-SSD-02046]** be in accordance with Federal Communications Commission 47CFR Part 15, Class A.

3.11.6 Mechanical

Supports **shall[STARS-SSD-02047]** be provided to keep cables organized, relieve stress, prevent sagging and cable access will either be from the top of the enclosure or below the floor, internal to the enclosure.

Electrical connectors external to LRUs and fastener hardware not provided as part of COTS equipment **shall[STARS-SSD-02048]** conform to ANSI/EIA standards.

All equipment, except workstation related equipment, **shall[STARS-SSD-02049]** be mounted in enclosures which conform to ANSI/EIA 310-D.

Front and rear access **shall[STARS-SSD-02050]** be provided for all STARS enclosures.

All STARS equipment enclosure finishing **shall[STARS-SSD-02051]** be in accordance with FAA-G-2100F, 3.3.1.2.6 and its associated subsections.

The physical footprint of the operational STARS TRACON equipment installed in the equipment room, excluding workstations, printers, and tower equipment **shall[STARS-SSD-02052]** be no more than 260 square feet including front and rear access to equipment enclosures.

The physical footprint of the operational STARS equipment installed in a tower equipment room, excluding workstations, printers, and TRACON equipment and including front and rear access to the equipment enclosures **shall[STARS-SSD-02053]** be no more than:

a. For 1-2 TDWs: 34 square feet
b. For 3-5 TDWs: 51 square feet
c. For more than 5 TDWs: 119 square feet.

An additional 17 square feet of space **shall[STARS-SSD-02054]** be allowed if Direct Sensor Feed is required for any tower.

No unique storage space **shall[STARS-SSD-02055]** be required by the STARS automation subsystem.

Structural strength and rigidity of the STARS equipment enclosures, with access doors open or closed, **shall[STARS-SSD-02056]** be such that normal handling in loading, shipping, unloading, and setting into position for installation, including normal operational and non-operational installation, will not result in any permanent set or deformation sufficient to impair the appearance or operation of the equipment nor to interfere with ease of maintenance, removal of units or components, ventilation, and operation of access doors.

The floor loading conditions for each completed enclosure, cabinet, rack, workstation, and any supporting maintenance devices **shall[STARS-SSD-02057]** be 125 pounds or less per square foot.

No removable component of the STARS system **shall[STARS-SSD-02058]** exceed the weight lifting requirements of FAA-G-2100F, 3.3.7.3, for male and female handling, unless the system provides mechanical devices for all necessary handling.

The maximum weight of the STARS ATC workstation equipment **shall[STARS-SSD-02059]** be as follows:

a. A completed TCW – no more than 800 pounds. (Exclude for Dismounted TCW)
b. A TDW display – no more than 100 pounds.

3.12 Computer Human Interface (CHI)

3.12.1 General CHI

All requirements stated in 3.12.1 through 3.12.3 **shall[STARS-SSD-02060]** apply to the CHI for all STARS operational users, including monitor and control operators.

All local and remote tower ATC operational data entry and display functions **shall[STARS-SSD-02061]** have the same CHI, unless otherwise specified, as that of the TRACON TCW.

3.12.2 Data Entry CHI

Any update to a data field **shall[STARS-SSD-02062]** be propagated by the system to all affected views.

Tactile or audible feedback **shall[STARS-SSD-02063]** be provided in response to all keystrokes and data entry actions with the exception of DCP actions and CAS data entry software that does not support keystroke feedback.

Operator input from a TCP **shall[STARS-SSD-02064]** continue to be displayed until there is a TCP action which causes its activation or removal.

Upper and lower case input at a TCP **shall[STARS-SSD-02065]** be accepted as equivalent.

Manually entered data, except for DCP actions, **shall[STARS-SSD-02066]** be displayed for operator confirmation prior to system acceptance and processing.

A command which is under composition **shall[STARS-SSD-02067]** be clearable and modifiable by the operator.

Data entry feedback for a command including execution of a function key at a TCP **shall[STARS-SSD-02068]** be cleared automatically when the command is accepted.

All MCP data entry fields **shall[STARS-SSD-02069]** initially be cleared or set to a default value when a window is opened.

The pointer device at a TCP **shall[STARS-SSD-02070]** be used as a cursor control and provide a method for selection of one or more displayed objects as command parameters.

When the cursor rests on a selectable icon or button, feedback **shall[STARS-SSD-02071]** be provided to indicate which object would be selected if the pointer device is used to make a selection.

The ratio of pointer device to cursor movement (cursor speed) **shall[STARS-SSD-02072]** be operator-selectable and proportional to device movement at the TCP and MCW with the cursor moving in the same direction as the pointer device.

TCP input **shall[STARS-SSD-02073]** relocate the cursor to an adapted location on the TCW or TDW.

MCP input at an MCW **shall[STARS-SSD-02074]** enable either the left or right mouse Enter button with the left button being the default.

For QWERTY keyboards, a set of numeric keys **shall[STARS-SSD-02075]** be separate from the alphanumeric keys and arranged in accordance with ANSI/HFES 100.

The Enter Key **shall[STARS-SSD-02076]** be located in a position that allows a fifth percentile female to use the numeric pad and activate the Initiate Function device without moving her hand.

Function keys which are programmable through adaptation **shall[STARS-SSD-02077]** be labeled.

3.12.3 Display Output CHI

Data **shall[STARS-SSD-02078]** be presented in a form that can be used immediately, with no further calculations, extrapolation, or references to extraneous sources.

An indication **shall[STARS-SSD-02079]** be provided to the operator whenever information is not displayed due to insufficient space in a view.

All text **shall[STARS-SSD-02080]** be presented in upper case, lower case, or mixed case.

Resizing any view **shall[STARS-SSD-02081]** maintain character and symbol sizes at discrete font sizes available in standard COTS/CAS products employed, whether the resizing is automatic or manually initiated.

All TCP lists **shall[STARS-SSD-02082]** follow these guidelines:

a. The first character of each line is left justified and aligned vertically
b. Each item is on a new line
c. Blank areas are used to separate logical groups of information
d. The current position of data that may be paged or scrolled is displayed at all times.

In multiple page views, each page **shall[STARS-SSD-02083]** be fully labeled.

Information coding techniques and conventions **shall[STARS-SSD-02084]** be used to discriminate among different classes of data and consistently applies respectively with redundant coding techniques used for all alert and cautionary information.

All MCW views and TCW/TDW data items **shall[STARS-SSD-02085]** have adaptable color coding schemes respectively applied.

A geometric shape code **shall[STARS-SSD-02086]** have a consistent meaning for all information displayed at TCPs, unless the symbol has been provided in vectorized form by the Government.

All auditory signals **shall[STARS-SSD-02087]** follow these guidelines:

a. Be present when used with redundant visual display information
b. Indicate the same information
c. Have an adaptable duration of at least 0.5 seconds
d. Have a unique meaning
e. Be adaptable between 400 and 3000 Hertz (Hz)
f. Modulate at an adaptable rate from one to eight cycles per second
g. Have an alert volume in accordance with FAA-G-2100F, Section 3.3.6.5.5.1.

The use of blinking or flashing **shall[STARS-SSD-02088]** use the following guidelines:

a. Be limited to search and identification tasks and to draw attention to time-critical events
b. Operate at a duty cycle of 50 ± 10 percent
c. Blink using an ‘on’ and ‘off’ states, where the ‘on’ state is set to the current intensity level of the corresponding brightness group, and the ‘off’ state is 50 ± 10 percent of the current intensity level
d. Apply an adaptable rate between one and three cycles per second with a default of one
e. Terminate blinking as a function of acknowledgment.

Temporary unavailability of a menu option **shall[STARS-SSD-02089]** be indicated through information coding.

The order of menu items **shall[STARS-SSD-02090]** be adaptable.

3.12.4 Monitor and Control CHI

The requirements in 3.12.4 **shall[STARS-SSD-02091]** be applicable to the MCP only.

MCP control authority **shall[STARS-SSD-02092]** operate as follows:

a. Automatically log off if failure is detected
b. Display a warning message and generate a momentary audible sound if inactivity is detected for a selectable period of time
c. Log out the MCP if the inactivity warning is not acknowledged within an adaptable period of time
d. Allow a third MCP to acquire control if two MCPs are already active.

The system **shall[STARS-SSD-02093]** support either one or two MCWs, each capable of supporting both FSL/ESL or FSL/EFSL.

The MCP **shall[STARS-SSD-02094]** inform the user of the consequences and require a positive confirmation of a data destructive command/control action prior to its execution.

The need for a confirmation prompt on non-data destructive MCP commands **shall[STARS-SSD-02095]** be configurable in adaptation data.

The capability **shall[STARS-SSD-02096]** exist to reset both an aural & visual alarm via a single action or an aural alarm independent from its associated visual alarm.

Based on pointer device selection, a set of context-sensitive menus **shall[STARS-SSD-02097]** be displayed.

The ratio of pointer device to cursor movement (cursor speed) **shall[STARS-SSD-02098]** be operator-selectable and proportional to device movement with the default setting at mid-range.

Lists of data **shall[STARS-SSD-02099]** be aligned vertically and presented as follows:

a. If all numeric - right justified
b. If alphabetic or alphanumeric - left justified or centered.

All M&C data **shall[STARS-SSD-02100]** be presented in the form of movable, resizable, opaque views displayed simultaneously with no restrictions as to view type or location.

The MCP **shall[STARS-SSD-02101]** use the following rules to determine the color of the top level "TCW" button:

a. If at least one TCW is blinking Red and all other Online TCWs are Red - The top level "TCW" button will be blinking Red.
b. If all Online TCWs are Red - The top level "TCW" button will be Red.
c. If all Online TCWs are Green - The top level "TCW" button will be Green.
d. If all TCWs are Gray - The top level "TCW" button will be Gray.
e. If at least one, but not all, Online TCWs is Green - The top level "TCW" button will be yellow.
f. If at least one Online TCW is Yellow - The top level "TCW" button will be Yellow.

The MCP **shall[STARS-SSD-02102]** use the following hierarchical rules to determine the color of the top level "TOWERS" button:

a. If all TDWs are Gray - The top level "TOWERS" button will be Gray.
b. If at least one TDW is blinking Red and all other Online TDWs are Red - The top level "TOWERS" button will be blinking Red.
c. If at least one Tower Network Equipment Button is blinking Red and all other Tower Network Equipment Buttons are Red - The top level "TOWERS" button will be blinking Red.
d. If all Online TDWs are Red - The top level "TOWERS" button will be Red.
e. If all Tower Network Equipment is Red - The top level "TOWERS" button will be Red.
f. If all online TDWs are Green and all Tower Network equipment is Green - The top level "TOWERS" button will be Green.
g. If at least one, but not all, of the Online TDWs and the Tower Network Equipment buttons are Green - The "TOWERS" button will be Yellow.
h. If at least one Online TDW is yellow - The "TOWERS" button will be Yellow.

3.12.5 TCP CHI

The Display Control Bar (DCB) **shall[STARS-SSD-02103]** be located on the outside edge of the display screen on the top, bottom, left or right of the display.

The DCB **shall[STARS-SSD-02104]** function as follows:

a. Can be enabled/disabled via keyboard sequence
b. When enabled, the DCB will be transparent to targets and associated data
c. When disabled, the DCB will be removed and that portion will be incorporated into the radar portion of the display.

When selected, an Auxiliary DCB **shall[STARS-SSD-02105]** replace the main DCB and provide additional menu functions, have no further submenus, except confirmation submenus, have a means to return to the main menu and allow access to only one menu at a time.

The overall size of the DCB **shall[STARS-SSD-02106]** be fixed with a nominal overall size of 75 ± 6 pixels by the height or width of the Radar Window.

DCB buttons **shall[STARS-SSD-02107]** be as follows:

a. Standard - 75 ± 6 pixels wide by 75 ± 6 pixels high
b. Narrow - 50 ± 4 pixels wide by 75 ± 6 pixels high horizontal or 75 ± 6 pixels wide by 50 ± 4 pixels high vertical
c. Half high - 75 ± 6 pixels wide by 37 ± 3 pixels high.

DCB overall focus **shall[STARS-SSD-02108]** be displayed whenever the cursor is positioned over any portion of the DCB indicated by the cursor changing to the DCB cursor symbol and removed upon any of the following:

a. Movement of the cursor outside the DCB when no action has been initiated
b. Movement of the cursor outside the DCB when a DCB function has been completed
c. Use of the CLEAR key when no DCB function is in progress

d. An entry that causes an implied clear if the entry does not initiate a DCB function.

DCB button focus **shall[STARS-SSD-02109]** be indicated whenever the cursor enters the button and will change the text color to highlight the button

Only a single DCB button at a time **shall[STARS-SSD-02110]** be selectable by either the trackball or keyboard ENTER.

DCB button focus, updated in response to the navigation within the DCB **shall[STARS-SSD-02111]** be active prior to command initiation by either trackball movement or use of the keyboard.

DCB navigation, regardless of horizontal or vertical menu, **shall[STARS-SSD-02112]** be provided by the cursor or the use of the "space" or "back space" keys on the keyboard.

The cursor **shall[STARS-SSD-02113]** function as follows within the DCB:

a. Displayed during navigation
b. Locked within the submenu when displayed
c. Displayed within the button at a fixed location after enter is executed.

When the DCB is disabled or in use by another keyboard, certain menu keys **shall[STARS-SSD-02114]** initiate their respective function, all others result in an error indication unless in ES mode or the DCB is re-enabled via the DCB menu key.

DCB buttons **shall[STARS-SSD-02115]** be organized into functional groups and the nominal size will be the same regardless of DCB orientation.

The DCB button labels **shall[STARS-SSD-02116]** conform as follows:

a. Not change the size of the DCB or any DCB button irregardless of character size
b. Permit up to 7 characters per line on a nominal size button
c. All DCB button labels are upper case and adaptable
d. The label of the preference set, map and radar site buttons will be assigned or adapted.

DCB button types and characteristics **shall[STARS-SSD-02117]** be defined as follows:

a. Toggle buttons to provide ON/OFF functional capability
    1. Button coloring and border shadowing will simulate button depression
    2. The depressed state of the button will indicate the function is ON
    3. Selection of a button not part of an exclusive group, will toggle it either from OFF to On or ON to OFF.
b. Adjustment buttons to permit parameter adjustment for the corresponding function
    1. Button coloring and border shadowing will simulate button depression
    2. With the exception of PLACE CNTR, adjustment button selection will cause the increase or decrease of the value until it arrives at its minimum or maximum
    3. While the adjustment is active the cursor will not be displayed and the adjustment value will be displayed
    4. Specific parameter values may be entered via keyboard with depressing the ENTER key completing the adjustment

5. Implementation of the newly entered value will be presented either on the display or by aural feedback.

c. Submenu selection buttons to select submenus.
    1. Selection of a submenu button will display the submenu adjacent to the selected function, space permitting
    2. Upon completion of the submenu function the submenu will be removed and the cursor returned to the Main Menu function button previously selected
    3. Feedback to indicate the active function, except preference sets, will be via the display submenu.

Entering the CLEAR key during the specified time **shall[STARS-SSD-02118]** cause the specified event:

a. When no parameter adjustment is in process and no submenu or Auxiliary DCB is selected the cursor will return to Home, regardless of Cursor Home/No Home selection
b. When the Auxiliary DCB has focus and no parameter adjustment is in process and no submenu is selected, the Main DCB will be displayed with the cursor on the SHIFT button unless in FMA mode, in which case the cursor will return to home and the Auxiliary DCB remain displayed
c. When a parameter adjustment is in process, the parameter will be reset to the value it had when the adjustment button was selected and the cursor returned to the adjustment button
d. When a submenu is displayed and no parameter adjustment is in process, the submenu will be removed and the cursor returned to the parent submenu selection button.

An implied clear during the specified time **shall[STARS-SSD-02119]** cause the specified event:

a. The Menu function selected will initiate
b. When the result of a function key selection and occurs while the DCB has focus, the cursor returns to Home, regardless of cursor Home/No Home selection
c. Focus will be removed from the DCB when initiating an implied clear if the implied clear is not the result of a Menu key selection
d. When the result of a Menu key selection, the cursor remains within the DCB button that corresponds to the selected Menu key
e. When a parameter adjustment is in process, the parameter is reset to the value it had when the adjustment button was selected.

Execution of a keyboard command sequence **shall[STARS-SSD-02120]** result in the clearing of any command under composition at any data entry set attached to the TCW/TDW and removal of any readout messages in all preview areas at the TCW/TDW.

3.12.6 TCP CHI DCB Functions

The RANGE adjustment button **shall[STARS-SSD-02121]** provide the capability to change the radar window display range from a minimum of 6 nautical miles to a maximum of up to 256 with a default of 64 nautical miles.

Keyboard input **shall[STARS-SSD-02122]** provide any integer range value up to the maximum adapted value in increments shown in Table 3.12.6-1.

Table 3.12.6-1 Range Increments

Range Value	Increments (nmi)
6 – 70	2
70 – 120	5
120 - 256	10

The OFF-CNTR toggle button on the DCP and the CNTR key on the keyboard **shall[STARS-SSD-02123]** cause the display to switch between the Center and Off-Center positions with the default radar center adapted per terminal area.

The PLACE CNTR button is used to redefine the Off-Center position and it **shall[STARS-SSD-02124]** remove the cursor from the display and enable use of the trackball to move ("pan") the radar display to the desired off-center position with selecting ENTER during this function having the following results:

a. Define the stored off-center position as the current display center
b. Return the cursor to the PLACE CNTR button
c. Deselect the PLACE CNTR function
d. Toggle the OFF CNTR button ON to indicate that the display is off-centered.

DCP knobs (S-N and E-W) **shall[STARS-SSD-02125]** cause the following:

a. Offset the display in the South-North/East-West directions
b. Toggle the OFF CNTR button ON to indicate that the display is off-centered
c. Redefine the stored off-center position only when the PLACE CNTR function is active.

The offset sensitivity in the cardinal directions **shall[STARS-SSD-02126]** be based on the current display range and the default radar window Off-Center and OFF-CNTR toggle position to be the center of the display.

TCP input and RR CNTR on the DCP **shall[STARS-SSD-02127]** respectively enable/disable the display of range rings and toggle between range ring center/off center with the default range ring origin being adaptable per terminal area.

The PLACE RR button and RR button on the DCB **shall[STARS-SSD-02128]** respectively enable redefining the range ring Off-center origin and permit the adjustment of the range ring interval to 2,5,10 or 20 nautical miles.

The selection of the PLACE RR button **shall[STARS-SSD-02129]** move the cursor to the display center and in the case of ESL only, change the cursor to the special symbol.

The selection of the ENTER key while in the PLACE RR function **shall[STARS-SSD-02130]** have the following results:

a. Move the range ring origin to the current cursor position
b. Return the cursor to the PLACE RR button
c. Deselect the PLACE RR function
d. In ESL only, remove the special cursor symbol.

All range rings **shall[STARS-SSD-02131]** be drawn as single-pixel-width solid lines with the exception of the 20 nautical mile ring which if adapted will be highlighted.

Up to 6 levels of weather in any combinations **shall[STARS-SSD-02132]** be selectable via DCP or keyboard input with weather levels being received from selected radars being uniquely indicated by text labeling and background color change on the corresponding WX toggle in either single sensor or multisensory views.

Individual brightness adjustment **shall[STARS-SSD-02133]** be provided and the current brightness displayed for the following groups of data:

a. Maps (Category A)
b. Maps (Category B), including Geographic Restriction areas and associated text
c. Data blocks, including Preview Area and cursor
d. Position symbols (includes TCP and unassociated track symbols)
e. Lists, including System Status Area
f. Tools (Range/Bearing and Predicted Track lines, Minimum Separation and TPA J-Ring or Cone) (except ESL)
g. Range rings
h. Compass rose
i. Primary targets, and fused-track target symbols
j. Beacon targets
k. Target histories
l. Weather
m. Weather contrast (stipples)
n. Display control bar (tool bar), including all elements
o. Background (except ESL)
p. FMA mode only - AMZ map (except ESL)
q. FMA mode only - NTZ map (except ESL)
r. FMA mode only - Runway and course line map (except ESL)
s. FMA mode only - Reference Lines map (except ESL)
t. TPA Tools
u. ATPA Tools

The Weather Contrast and Brightness controls **shall[STARS-SSD-02134]** adjust the ratio of stipple brightness relative to background weather color brightness and the overall brightness of weather, including stippling respectively.

Brightness setting adjustment **shall[STARS-SSD-02135]** be in steps of 5 with range as shown in Tables 3.12.6-2 and 3.12.6-3.

Table 3.12.6-2 FS Brightness Ranges

Group	Min	Max	Off
Maps (categories A and B)	5 (TCW), 25 (TDW)	100	No
Position symbol (FDB)	5	100	Yes
Data blocks (LDB)	5	100	No
Data blocks (FDB)	5	100	No

Group	Min	Max	Off
Data blocks (other – Unowned FDB)	5	100	No
Lists	5 (TCW), 25 (TDW)	100	No
Range rings	5	100	Yes
Compass rose	5	100	Yes
Primary targets (incl. ground range target symbol)	5	100	No
Beacon targets	5	100	No
Target history	5	100	Yes
Weather	5 (TCW), 25 (TDW)	100	No
Weather contrast	5 (TCW), 25 (TDW)	100	No
DCB	25	100	No
Tools	5	100	Yes
Background	0	100	(zero equivalent to off)
FMA AMZ map[1]	5	100	Yes
FMA NTZ map[1]	50	100	No
FMA Rwy. and course line map[1]	5	100	Yes
FMA Reference Lines map[1]	5	100	Yes
TPA Tools	5	100	No
ATPA Tools	5	100	No

[1] FMA Mode only

Table 3.12.6-3 ES Brightness Ranges

Group	Min	Max	Off
Maps	5	100	No
Full Data blocks	5	100	Yes
Lists	5	100	No
Range rings	5	100	Yes
Compass rose	5	100	Yes
Primary targets	5	100	Yes
Beacon targets	5	100	Yes
Target history	5	100	Yes
Weather	5	100	No
Weather contrast	5	100	No
DCB	25	100	No
Position Symbol	5	100	Yes

For the TDW in ESL mode, the brightness adjustment buttons will constitute a separate submenu that is enabled by the BRITE DCB button or keyboard key and the cursor placement when the submenu is opened **shall[STARS-SSD-02136]** be in the upper leftmost button of the selected BRITE submenu.

The SITE submenu selection button **shall[STARS-SSD-02137]** display the following based on identified condition:

a. Current radar becomes unavailable – text and background color indicate failure
b. Non-current radar unavailable – text (NA) and background color indicate failure
c. Contain a toggle for each sensor site available for selection
d. DONE button present to indicate completion of site selection

e. Include a select DSF for those towers having that capability.

The maximum number of radar sites **shall[STARS-SSD-02138]** be as specified in Table 3.2.1.1.23-1 for FSL and E-FSL, including DSA mode for STARS ELITE and Table 3.2.1.2.10-1 for ESL.

Selection of a new site **shall[STARS-SSD-02139]** cause the following to occur:
a. Radar not available – retain the current selected radar
b. Radar is available – automatic deselection of current site
c. Radar not available – display an error message in the Preview Area (ESL mode only).

Radar site selection **shall[STARS-SSD-02140]** be available via the keyboard using the SITE menu button and entering adapted character(s) associated with the radar site and in ESL mode indicated by the depressed state of the toggle button.

Cursor placement when the submenu is opened **shall[STARS-SSD-02141]** be in the button for the currently selected site or on the DONE button if no site is selected in ESL mode.

The SITE button **shall[STARS-SSD-02142]** contain the designator of the current radar selected.

Map on/off indications **shall[STARS-SSD-02143]** be consistently displayed across the DCP switches, the Main DCB Menu and the MAPS submenu, regardless of entry method, with the DCP and Main DCB Menu having six adaptation maps, with the MAPS submenu having either 32 buttons for a TCW or 2 sets of 16 for a TDW, a completion button, a CLR ALL button and the cursor located in the upper left most button.

The following **shall[STARS-SSD-02144]** be adaptable with regard to maps:
a. Up to 31 toggle button assigned to the MAPS submenu
b. Up to a design parameter of either map or category buttons per terminal area.

Each entry in the displayed map list (including current and category) **shall[STARS-SSD-02145]** contain at least the following data:
a. An indication if the map is currently displayed
b. The map number
c. The map mnemonic
d. The map description.

The CHAR submenu **shall[STARS-SSD-02146]** consist of the following:
a. Be composed of adjustment type buttons
b. Include a DONE button
c. Upon selection place the cursor in the Data Blocks submenu.

The following character sizes per system **shall[STARS-SSD-02147]** be available:
a. 6 sizes for Data Blocks, Tools and Lists for FSL and E-FSL
b. 3 sizes for DCB, a sub set of “a” for FSL and E-FSL
c. 5 sizes for Data Blocks and Lists for ESL.

The CHAR submenu **shall[STARS-SSD-02148]** individually control the character size for the following groups of data:

a. Display control bar, FSL and E-FSL only
b. Data blocks, including cursors and Preview Area
c. Lists, including System Status Area
d. Controller tools, FSL and E-FSL only
e. Position symbols

Aural Alarm **shall[STARS-SSD-02149]** have the following capabilities:

a. A TCP input to test the audible alert volume
b. A VOL button to adjust the volume from Off to 10
c. Adaptable duration of at least 0.5 seconds.

The DCB location selection between top, bottom, right or left **shall[STARS-SSD-02150]** be provided using one of the four DCB location buttons (DCB TOP, DCB BOTTOM, DCB RIGHT, DCB LEFT).

Number of sensor history symbols adjustment between one and five **shall[STARS-SSD-02151]** be provided using the HISTORY button.

The leader length and direction using the LDR and LDR DIR buttons **shall[STARS-SSD-02152]** be displayed as selected with the leader length adjustable from 0 to 1.5 inches in eight steps and the leader direction being any of the 8 cardinal positions of N,NE,E,SE,S,SW,W and NW.

The Cursor control **shall[STARS-SSD-02153]** be provided as follows:

a. CURSOR HOME button toggles the mode On to return the cursor to the home position or Off leaving the cursor at its last location upon command completion
b. CURSOR SPEED button will adjust speed from 1 to 10
c. Movement of the cursor will be anywhere within the Radar Window including the DCB
d. Menu key action will be accepted independent of cursor position.

The MODE submenu **shall[STARS-SSD-02154]** provide selection of TCW/TDW mode with the following capabilities:

a. In FS workstation mode to then select FS, EFS or ES, FS Training or FMA
b. In FS workstation mode indicate if ES is unavailable with NA in corresponding button
c. In ES workstation mode to then select ES or ES Training
d. In ES Workstation mode indicate if FS is unavailable with NA in corresponding button
e. In EFS workstation mode to then select FS, EFS, EFS Training, FMA or DSF
f. In FS workstation mode for STARS ELITE to then select FS, FS Training, FMA or DSA
g. In any mode indicate the current state in the MODE button and by the depressed state of the selected submenu button
h. In any mode place the cursor in the currently selected button
i. In any mode provide confirmation of the accepted mode selection.

The compass rose, oriented toward magnetic north, **shall[STARS-SSD-02155]** be displayed in a rectangular format bounded by the edges of the screen and the inside edge of the DCB (if displayed) marked with a tic every 5 degrees and a degree label every ten.

In FMA mode, an adjustment for selection of a specific FMA function **shall[STARS-SSD-02156]** be performed using the following:

a. Active Monitored Zone (AMZ) from the adapted AMZ's using the AMZ button
b. Magnification ratio using the MAG button
c. Voice alert volume using the VOICE button
d. Track prediction vector length using the PTL LNTH button
e. Disable all alerts using the NTZ ALL button
f. Test of voice alert speaking capability using the VOICE CHECK button
g. Enable/Disable for individual NTZs using the NTZ 1, NTZ 2 and NTZ 3 buttons.

In FMA mode, an independent selection of data block leader line direction **shall[STARS-SSD-02157]** be provided for each runway adapted to the AMZ and DCB buttons will be labeled with the adapted runway designations.

Functions unique to TSAS will be accessible via DCB buttons only when TSAS is adapted for the site. The following TSAS functions **shall[STARS-SSD-02158]** be selectable via a DCB button:

a. Mode regarding non-Timeline tools On/Off
b. Slot Marker size
c. Slot Marker and Timeline for flight and non-flight data brightness, excluding "Off"
d. Display of Early / Late indication
e. Air Speed presentations of None, Track Only, Slot Only, Track and Slot
f. Advised Air Speed threshold
g. Runway Sequence numbers
h. Trajectory brightness
i. Character size for flight and non-flight data
j. Individual pre-adapted and currently selected Timeline displays per TCP On/Off
k. Selection of Timelines per TCP via DCB or keyboard entry

3.12.7 TCP CHI Display Presentation

The Preview Area **shall[STARS-SSD-02159]** display the following:

a. Operator prompts
b. Mnemonics for function entries including DCB functions
c. Error messages
d. Nothing upon command initiation or the CLEAR key selected.

Automatic message clearing of the Preview Area **shall[STARS-SSD-02160]** operate as follows:

a. When enabled, informational and error messages will be removed after an adapted duration
b. TCP input will enable or inhibit the function
c. Initial setting of the function will be enabled.

In ES workstation mode, Data Entry Sets **shall[STARS-SSD-02161]** function as follows:

a. Interaction with the DCB will only be from the "core" set

b. The cursor symbol for “non-core” sets will remain unchanged when within the DCB
c. The use of menu keys, with the exception of the core menu key, from “non-core” sets will leave the DCB function selection unchanged and cause an error message to be displayed in the Preview Area
d. The “non-core” sets will continue to provide commands regardless of whether the set has focus in the DCB
e. When the cursor corresponding to the “core” set is not in the DCB, any set will be able to become the core by selecting the CORE menu key.

When enabled the following **shall[STARS-SSD-02162]** be displayed in single sensor slant range view:

a. A Search Target Extent, for search-only track reports
b. A Beacon Target Extent, for beacon-only track reports
c. A Beacon-Reinforced Target, for a track with both search and beacon track reports.

Per Figure 3.12.7-1, the Search and Beacon Target Extent **shall[STARS-SSD-02163]** be displayed for search centered at the reported target position and be oriented with dimension A perpendicular to a radial from the reporting radar origin through the target position and for beacon at an adaptable distance E beyond the reported target position and oriented with dimension C perpendicular to a radial from the reporting radar origin through the target position.

Figure 3.12.7-1 Target Symbol Illustration

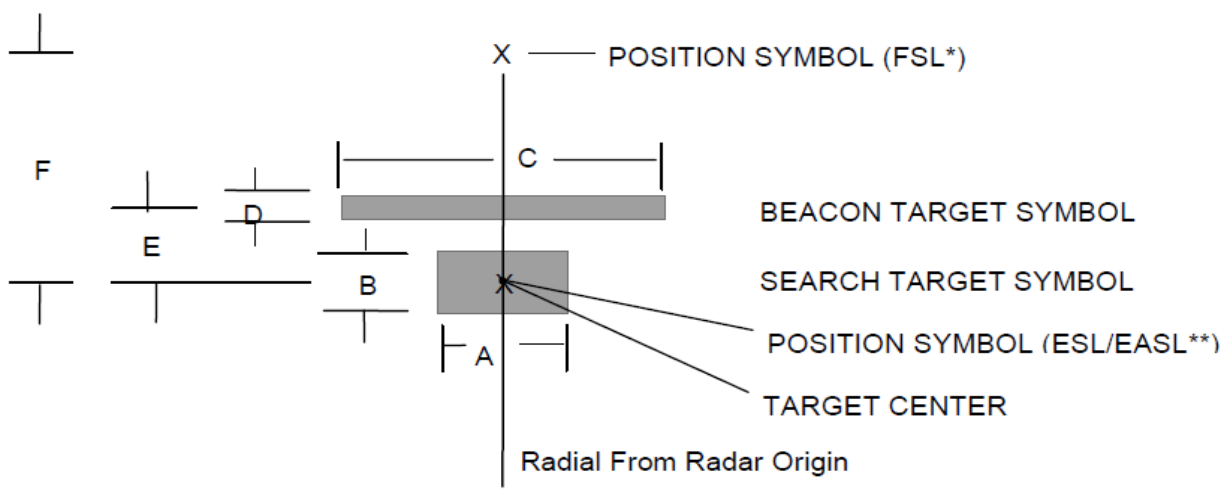

* - For System Versions 6 and beyond
** - For FSL System Versions prior to 6 and ESL all System Versions

In accordance with Table 3.12.7-1, the following **shall[STARS-SSD-02164]** apply:

a. The target symbol for correlated targets are adaptable as a function of target slant range
b. The value of parameter “A” for correlated targets is the linear interpolation of the dimensions derived for the two ranges that bracket the target range
c. Correlated/uncorrelated targets beyond the maximum slant range are displayed via a fixed-size symbol of a target located at the maximum range

d. The correlated search target azimuth extent is the larger of 0.125 nmi and the extent calculated using parameter “G”.

The dimensions of the target symbol for correlated targets in single senor slant range view **shall[STARS-SSD-02165]** be determined using either:

a. PAM adaptation parameters or
b. Standard adaptation parameters of Table 3.12.7-1 or
c. Standard adaptation parameters of Table 3.12.7-1 as selected per 3.2.1.1.10.9.15.

The search target azimuth extent **shall[STARS-SSD-02166]** be half that of dimension "A" of an equivalent correlated radar target, but not less than an adaptable value, if all of the following are true:

a. It is either an uncorrelated radar target, or it is a correlated radar target whose track position symbol has been inhibited from display
b. It is not reported as correlated by an ASR-9 or ASR-11 radar
c. Its slant range from the radar is not beyond the maximum specified in Table 3.12.7-1.

Table 3.12.7-1 Target Extent Symbol Adaptation Parameters

A = Search target azimuth extent[2]. (computed per 3.12.7[6,7 & 8] using the following adaptation table covering 6 range intervals)				
Range	**PAM Default[4]**	**Standard TCW Default[1]**	**Standard TDW Default**	**Parameter Range[1]**
0 to 10 nm	28 ACPs	28 ACPs	28 ACPs	16 – 64 ACPs
20 nm	19 ACPs	19 ACPs	19 ACPs	16[5] – 64 ACPs
30 nm	16 ACPs	16 ACPs	16 ACPs	8 – 64 ACPs
40 nm	12 ACPs	12 ACPs	12 ACPs	8 – 64 ACPs
50 nm	11 ACPs	11 ACPs	11 ACPs	8 – 64 ACPs
60 nm	9 ACPs	9 ACPs	9 ACPs	8 – 64 ACPs
B = Search target range extent[2]				
All ranges	5/32 nmi	5/32[3] nmi	6/32 nmi	32 – 8/32 nmi
C = Beacon target azimuth extent[2]				
N x displayed search target azimuth extent	N = 2.0	N = 2.0	N = 2.0	N = 1.0, 1.5, 2.0, 2.5, 3.0
D = Beacon target range extent[2]				
All ranges	1/32 nmi	1/32 nmi	1/32 nmi	1/32 – 8/32 nmi
E = Beacon target range offset[2]				
All ranges	3/32 nmi	3/32 nmi	4/32 nmi	0 – 8/32 nmi
F = Position Symbol offset[2 + 6]				
All ranges	6/32 nmi	6/32 nmi	6/32 nmi	0 – 8/32 nmi
G = Minimum search target azimuth extent[6]				
All ranges	0 ft/nmi	75 ft/nmi	75 ft/nmi	0 – 150 ft/nmi[7]

1. ACP (Azimuth Change Pulse) = 360 degrees/4096 = 0.087906 degrees.
2. Worst case error is (1/16 nm + 1 pixel in x and y) for azimuth extent and (3/128 nm + 1 pixel in x and y) for range extent and offset.
3. 3/32 nm for STARS Versions 1 and 3.
4. For System Versions 4, 6 and 7.

5. 8 for System Version 4. 6 and 7.
6. For Systems Versions 6 and beyond.
7. Feet per current range setting for the display in nautical miles.

Target Extent components **shall[STARS-SSD-02167]** be displayed as filled rectangles without borders.

Target Symbol in Single and Multi-sensor reported ground range views **shall[STARS-SSD-02168]** be as follows:

a. A rectangular symbol oriented with the long side perpendicular to the track heading will be used for a tracked target
b. The target symbol size will be fixed with respect to target and display range
c. The target symbol will be filled for correlated targets within an adapted range or outlined if beyond that range
d. The target symbol for uncorrelated or correlated by an ASR-9 or 11 will be a filled square.

In FMA mode a target symbol **shall[STARS-SSD-02169]** be displayed as a circle of fixed adaptable radius, with an adaptable line thickness, centered on the target reported or coasted position.

The non-radar target symbol in slant range view **shall[STARS-SSD-02170]** be displayed as a filled circle of fixed adaptable radius.

The Fused target location symbol **shall[STARS-SSD-02171]** be displayed with the center of the system track's extrapolated position at the time of display updated as a filled non-directional symbol whose size is derived from a set of adaptable parameters, and from the most recent system track data as follows:

a. Using the target report, the tracker will compute a positional uncertainty value as described in Table 3.12.7-2.
b. That value and the associated sensor support, the eligibility of the symbol for display as determined and described in Table 3.12.7-5.
c. Using the adaptable parameters defined in shall[STARS-SSD-02176], the size of the displayed symbol will be determined per Table 3.12.7-5.

A system-wide adaptable parameter **shall[STARS-SSD-02172]** define the level of opacity for the displayed Fused Terminal Separation and Intermediate Separation target location symbols.

If the Fused target location symbol for an associated track is inhibited from display due to excessive positional uncertainty then an adaptable Non-Radar Separation (Default = "TRK") indication **shall[STARS-SSD-02173]** be displayed in the track’s full or partial data block.

The Fused target location symbol **shall[STARS-SSD-02174]** maintain the following characteristics:

a. For Unassociated tracks, inhibit from display if the track is laterally coasting
b. For Associated tracks, inhibit from display due to lateral coasting then display an adaptable coast indication in the data block

c. For Associated tracks, that meet the requirements for Increased Separation display an indication (Default = "ISR") in the data block
d. For non-established primary tracks, uncorrelated target reports (plots) and test target reports display the low confidence primary target location symbol.

In fused display view, the TCW/TDW **shall[STARS-SSD-02175]** display a target location symbol for non-established primary tracks and uncorrelated target reports (plots) from only the adapted preferred sensor within the adapted surveillance/altimeter data tile.

Adaptable parameters for Fused Track Symbol size and separation eligibility **shall[STARS-SSD-02176]** be defined as follows:

a. Minimum Pixel Dimension is the minimum dimension of the target location symbol, measured in pixels
b. Fused Symbol Distance Dimension is the nominal dimension of the target location symbol used for displays that do not have parallel approach monitor mode selected, measured in distance
c. Reduced Fused Symbol Distance Dimension is the nominal dimension of the reduced size target location symbol used for displays that have parallel approach monitor mode selected, measured in distance
d. Confidence Level is a desired level of statistical probability that the target position is contained within the displayed symbol
e. Terminal Separation Threshold is the maximum allowable horizontal positional uncertainty below which a track is eligible for Standard Terminal separation procedures
f. Intermediate Separation Threshold is the maximum allowable horizontal positional uncertainty below which a track is eligible for Increased Separation procedures
g. Low Confidence Primary Symbol Ratio is the dimension of the target location symbol that is displayed for unassociated primary tracks whose computed positional uncertainty diameter exceeds the adapted Intermediate Separation Threshold
h. Primary Symbol Maximum Pixel Dimension is the maximum dimension of the low confidence primary target location symbol, measured in pixels
i. Aircraft Wingspan is the additional uncertainty that is applied to allow for the size of the largest aircraft.

Table 3.12.7-2 Processing Logic for Computation of Track Positional Uncertainty Value

A1	The system will compute a single positional uncertainty value for each track on each update as follows: • If the track's positional uncertainty value (calculated following a previous track update) is above the adapted Terminal Separation Threshold uncertainty, it will be re-used and not recalculated if insufficient time has elapsed since the most recent threshold transition. • Otherwise, the track's positional uncertainty value will be recalculated using the system track covariance matrix, the system will calculate two eigenvalues: σ_2 is the larger of the two values, and σ_1 is the smaller. In conjunction with the adapted Confidence Level percentage, the table below shows how the eigenvalues are used to derive an initial uncertainty value for the track. The adapted maximum

Aircraft Wingspan value (refer to A2) and any adjustment needed to account for unknown track altitude (refer to A3) are then added to the initial uncertainty value to obtain a provisional uncertainty value.

Ratio of Std. Deviations (σ_1/σ_2)	σ_2 Scaling Factor for Confidence Level					
	50%	68%	80%	90%	95%	99%
<0.05	0.67	1.00	1.28	1.65	1.96	2.58
<0.15	0.68	1.01	1.29	1.65	1.96	2.58
<0.25	0.71	1.04	1.30	1.67	1.97	2.58
<0.35	0.75	1.07	1.32	1.68	1.98	2.59
<0.45	0.81	1.12	1.35	1.72	2.01	2.61
<0.55	0.87	1.17	1.40	1.76	2.04	2.63
<0.65	0.93	1.23	1.47	1.81	2.08	2.67
<0.75	1.00	1.30	1.54	1.88	2.15	2.72
<0.85	1.06	1.36	1.62	1.95	2.23	2.79
<0.95	1.12	1.43	1.71	2.04	2.33	2.90
>=0.95	1.18	1.51	1.79	2.15	2.45	3.04

Note that a Confidence Level of 0% effectively inhibits the variable sized symbol processing and the symbols will always be drawn at their smallest possible size.

- If the provisional uncertainty value does not exceed the adapted Terminal Separation Threshold uncertainty, then a new positional uncertainty value will be calculated using 50% of the positional uncertainty value from the previous track update and 50% of the newly-calculated provisional uncertainty value.
- If the provisional uncertainty value exceeds the adapted Terminal Separation Threshold uncertainty, and neither of the previous track updates yielded a provisional uncertainty value that exceeded this threshold, then the new positional uncertainty value will be calculated using 50% of the positional uncertainty value from the previous track update, and 50% of the current provisional uncertainty value.
- If the provisional uncertainty value exceeds the adapted Terminal Separation Threshold uncertainty, and one or both of the previous track updates yielded a provisional uncertainty value that also exceeded this threshold, then the new positional uncertainty value will be set equal to the newly-calculated provisional uncertainty value.

A2 For example, consider a case where on a particular track update, σ_2 is 1000 feet and σ_1 is 500 feet in diameter. The scaling factor from the table is 2.04 for a 95% confidence level. In every case, an allowance is made for the wingspan of the largest aircraft by adding the adaptable parameter Aircraft Wingspan. Assuming an adapted value of 250 feet, the track's positional uncertainty radius is 2040 + 250 = 2290 feet.

A3 For tracks without altitude data, the positional uncertainty has to be increased by an amount that takes into account the possible horizontal error that could arise from the worst-case altitude estimation. This is a function of the range of the target from the updating radar, track speed and the radar cone of silence.

A Fused track **shall[STARS-SSD-02177]** become eligible for Standard Terminal Separation if it is supported for a site-adapted sensor-specific eligibility interval by at least one of the following:

a. Reports from a radar whose slant range is less than the system adapted value for that type of radar and if applicable, radar mode and type of report per Table 3.12.7-3
b. Reports from a multilateration sensor
c. ADS-B reports that meet all of the following criteria:
    1. The elapsed time since the last target report for this track from this sensor is less than the adapted high update rate for the sensor
    2. Link Version # is greater than 1
    3. NIC is present
    4. NIC is not less than the system adapted threshold
    5. NACp is present
    6. NACp is not less than the system adapted threshold
d. ADS-B reports that meet all of the following criteria:
    1. that the elapsed time since the last target report for this track from this sensor is less than the adapted high update rate for the sensor
    2. Link Version # is greater than 1
    3. NACp is not present
    4. NIC is present
    5. NIC is not less than the system adapted threshold
    6. NIC is not less than the system adapted threshold.

A Fused track's eligibility for Standard Terminal Separation **shall[STARS-SSD-02178]** cease if reports of the required type specified above are not received for an adapted interval and will remain ineligible for at least an adapted period of time.

Table 3.12.7-3 Default Slant Range Values - Maximum Standard (Terminal) Separation

Radar Type	Maximum Reported Slant Range	
	Primary Reports	Non-Primary Reports
Long-range (En Route) radar MSSR	40 nm	40 nm
Long-range (En Route) radar non-MSSR	40 nm	40 nm
ASR-11 terminal radar	40 nm	60 nm
ASR-9 Mode S terminal radar in Mode S mode	40 nm	60 nm
ASR-9 Mode S terminal radar in IBI mode	40 nm	40 nm
ASR-9 non-Mode S terminal radar	40 nm	40 nm
Any other terminal radar	40 nm	40 nm

1. MSSR - Monopulse Secondary Surveillance Radar.

Table 3.12.7-4 Default Eligibility/Loss-of-Eligibility Intervals

Sensor Type	Eligibility Interval	Loss-of-Eligibility Interval
Long-range (En Route) radar	0 seconds	13 seconds
Terminal radar	0 seconds	13 seconds
Fast update (ADS-B)	0 seconds	13 seconds
Fast update (Multilateration)	0 seconds	10 seconds

Note that a value of 0 for the Eligibility Interval has a special meaning that will allow the transition back to an eligible state to occur on the first sensor report rather than the second.

A Fused track **shall[STARS-SSD-02179]**become eligible for Increased Separation if it is supported for an adapted eligibility interval by at least one of the following:

a. Reports from a radar
b. Reports from a multilateration sensor
c. ADS-B reports that meet all of the following criteria:
    1. Link Version # is greater than 1
    2. NIC is present
    3. NIC is not less than the system adapted threshold
    4. NACp is present
    5. NACp is not less than the system adapted threshold
d. ADS-B reports that meet all of the following criteria:
    1. Link Version # is greater than 1
    2. NACp is not present
    3. NIC is present
    4. NIC is not less than the system adapted threshold
    5. NIC is not less than the system adapted threshold

A Fused track's eligibility for Increased Separation **shall[STARS-SSD-02180]** cease if reports of the required type specified above are not received for an adapted eligibility interval.

The software **shall[STARS-SSD-02181]** use the Fused track's eligibility for Standard Terminal Separation, Increased Separation, and its computed positional uncertainty, to determine whether a symbol is displayable per Table 3.12.7-5.

Table 3.12.7-5 - Processing Logic for Fused-Track Symbol Display

D1	If the track is primary-only and associated, and its tracker-derived positional uncertainty is greater than the adapted Intermediate Separation Threshold then do not draw a symbol. If the track is non-primary and its tracker-derived positional uncertainty is greater than the adapted Intermediate Separation Threshold then do not draw a symbol. If the track is non-primary and is ineligible for both Standard Terminal Separation and Increased Separation then do not draw a symbol.
D2	If the display of a symbol was not inhibited in D1 above and the display does not have PAM mode selected, then draw the appropriate separation symbol according to the following conditions: a. If all of the following apply: 1. The track's computed positional uncertainty diameter is less than or equal to an adapted Terminal Separation Threshold; and 2. The track's computed positional uncertainty diameter is less than or equal to the Fused Symbol Distance Dimensions; and 3. The track is eligible for Standard Terminal Separation. Then draw the terminal separation symbol using the larger of Minimum Pixel Dimension, or Fused Symbol Distance Dimension converted to pixels at the current display range. b. If the track is unassociated and primary-only, and its computed positional uncertainty diameter exceeds the adapted Intermediate Separation Threshold or its firmness count has not

	reached the adapted Firmness Threshold the draw a low-confidence primary target location symbol. c. Otherwise draw the increased separation symbol using the larger of: Minimum Pixel Dimension or Fused Symbol Distance Dimension converted to pixels at the current display range.
D3	If the display of a symbol was not inhibited in D1 above and the display has PAM mode selected, then draw the appropriate separation symbol according to the following conditions: a. If all of the following apply: 1. The track's computed positional uncertainty diameter is less than or equal to an adapted Terminal Separation Threshold; and 2. The track's computed positional uncertainty diameter is less than or equal to the Fused Symbol Distance Dimensions; and 3. The track is eligible for Standard Terminal Separation. Then draw the terminal separation symbol using the larger of Minimum Pixel Dimension, or Fused Symbol Distance Dimension converted to pixels at the current display range. b. If the track is unassociated and primary-only, and its computed positional uncertainty diameter exceeds the adapted Intermediate Separation Threshold or its firmness count has not reached the adapted Firmness Threshold the draw a low-confidence primary target location symbol . Otherwise draw the increased separation symbol using the larger of: Minimum Pixel Dimension or Fused Symbol Distance Dimension converted to pixels at the current display range.

The track Position Symbol **shall[STARS-SSD-02182]** be the same color as the data block, include a black outline around each character and displaced from the reported target position by adaptable parameter "F" along the radial from the radar origin as illustrated in Figure 3.12.7-1 except in ES workstation mode or when a track is not displayed with a target extent symbol, in which case it is centered on the target reported position.

The following symbols **shall[STARS-SSD-02183]** be used for the Position Symbol for the condition indicated:

Position Symbol	Specified Condition
Open Diamond	Primary Track (except ESL)
Open Square	Select Code with Mode C
Open Triangle	Select Code without Mode C
Asterisk	Non-Select Code with Mode C
Plus	Non-Select Code without Mode C

The display of the position symbol **shall[STARS-SSD-02184]** be as follows per the condition specified:

a. If an unassociated track is squawking a matching site adapted beacon code, it will be superseded by an adapted single character position symbol
b. If an unassociated primary track is coasting, it will have the position symbol inhibited
c. If unassociated primary tracks are inhibited at a position, it will have the position symbol inhibited
d. If an unassociated primary track has not reached the adapted Firmness Threshold, it will have the position symbol inhibited.

Following track establishment, a Firmness Count **shall[STARS-SSD-02185]** be maintained for each update of a primary track until it reaches an adaptable Firmness Threshold which will be selected as follows:

a. If the track is not currently in any Target Processing Volume then the system-wide adapted Firmness Threshold will be used;
b. If the track is currently in one or more Target Processing Volumes then the Firmness Threshold will be the largest of any value adapted for the volumes or the system-wide value.

For any given position report, one target history symbol, consisting of a single, filled circle 7 pixels in diameter, **shall[STARS-SSD-02186]** be displayed.

A track's position history **shall[STARS-SSD-02187]** be displayed if display of histories is enabled, the minimum TCP-selected display history interval has elapsed, and any of the following conditions apply:

a. The display is in single-sensor view, the track is an established non-primary track, and the update to the track's position was sourced by the selected sensor. (See note 1 below).
b. The display is in single-sensor view, the track is an established primary track, the track is displaying a track position symbol and the update to the track's position was sourced by the selected sensor. (See note 2 below).
c. The display is in multi-sensor, or fused-track view, and the track is an established non-primary track. (See note 1 below).
d. The display is in multi-sensor or fused-track view, and the track is an established primary track, and the track is displaying a track position symbol. (See note 2 below).

   Notes:

   1. Target position histories are not displayed for a non-established track, but upon establishment of a non-primary track, the history positions prior to establishment will be displayed.
   2. Target position histories are not displayed for a primary track whose track position symbol has been inhibited from display.
   3. Target position histories are not displayed for a pseudo track or a coasting track.

History Symbols **shall[STARS-SSD-02188]** be displayed as follows:

a. Each history symbol is centered on the corresponding previous target position
b. The apparent brightness of history data deceases once per scan to emulate phosphor decay
c. A missed report for a target, which will not have its history notation displayed, will be included in the count of displayed history notations for that target.

If the target's altitude is outside the altitude filter limits, then the associated history trail **shall[STARS-SSD-02189]** be inhibited from display for the following:

a. ES and ES training workstation modes
b. FS workstation mode and the target does not display a data block.

Weather level data **shall[STARS-SSD-02190]** be displayed as follows:

a. Filled background areas with or without stipple patterns with color coding to discriminate weather intensity levels

b. Weather levels will be isolated and determinable based on the use of stipple and color coding
c. Aircraft data blocks, radar target and position symbols, history trails, lists and map data will be visible through any weather data.

The following cursor symbols **shall[STARS-SSD-02191]** be used:

Symbol	Purpose
+	Main keyboard cursor symbol
○	Second (handoff) keyboard cursor symbol (circle with 4 interior tic marks)
×	Third keyboard cursor symbol (letter "X")
⧺	Special cursor symbols for range ring center selection in ES
↖	DCB active cursor symbol – Used to indicate Display Control Bar focus

All lists, including Preview and System Status Area **shall[STARS-SSD-02192]** maintain the following transparency and positioning capabilities:
a. Be transparent and without borders
b. Be able to use the trackball to select a data block behind them
c. Be able to show and relocate all lists and windows
d. Be able to hide all lists except, System Status Area, Coast/Suspend, Coordination and LA/CA/MCI lists
e. Ensure that no two lists or windows overlap, if so adapted.

Displayed brightness of all members of a control group **shall[STARS-SSD-02193]** be the control setting, with percentage range as specified in Table 3.12.6-2, multiplied by the maximum values of the RGB color coordinates as defined in Table 3.12.7-7 with the items listed in Table 3.12.7-6 displayed in individually adaptable unique colors and those colors defined by RGB coordinates that are adaptable and defined for development purposes in Table 3.12.7-7.

Table 3.12.7-6 Colors

Data Item	FSL Color (TCW)	FSL Color (TDW)	ESL Color (TCW)	ESL Color (TDW)	STARS LITE Color	FS Brightness
Radar Window Background	Black	Black	Black	Black	Black	Background
Data Block Owned/Previously Owned	White	White			White	Data blocks (FDB)
Position Symbol (Owned/Previously Owned FDB)	White	White	White	White	White	Position Symbol (FDB)
Data Block Owned/Previously Owned - Blink	Blinking White	Blinking White			Blinking White	Data Blocks (FDB)
Position Symbol – Owned/Previously Owned Blink	Blinking White	Blinking White			Blinking White	Position symbol (FDB)

Data Item	FSL Color (TCW)	FSL Color (TDW)	ESL Color (TCW)	ESL Color (TDW)	STARS LITE Color	FS Brightness
Data Block Unknown	Green	White	Green	White	White	Data blocks (other, LDB)
Data Block Unknown – Blink	Blinking Green	Blinking White				Data blocks (other, LDB)
Data Block Ghost	Yellow	Yellow				Position symbol (LDB)
Caution (FMA/MI, ATPA In-trail Distance) – Unacknowledge	Blinking Yellow	Blinking Yellow			Blinking Yellow	Data blocks (FDB, other, LDB), Lists
Caution (Ghost/FMA/MI, ATPA Warning Cone, ATPA In-trail Distance)	Yellow	Yellow			Yellow	Data blocks (FDB, other, LDB), Lists, ATPA
Alert (LA/CA/Alert SPC's/FMA) – Unacknowledged	Blinking Red	Blinking Red	Blinking Red	Blinking Red	Blinking Red	Data blocks (100%)
Alert (LA/CA/Alert SPC's/FMA)	Red	Red	Red	Red	Red	Data blocks (100%), Lists
ATPA Alert (ATPA Alert Cone, ATPA In-trail Distance)	Orange	Orange			Orange	Data blocks (FDB, other), ATPA
ATPA Alert Blink (ATPA In-trail Distance)	Blinking Orange	Blinking Orange			Blinking Orange	Data blocks (FDB, other)
Data Block – Handoff Attention (receiver)	Blinking White	Blinking White				Data blocks (FDB)
Position Symbol – Handoff Attention (receiver)	Blinking White	Blinking White				Position symbol (FDB)
Data Block – Pointout Attention	Blinking Yellow	Blinking Yellow				Data blocks (FDB)
Position Symbol – Pointout Attention (receiver)	Blinking Yellow	Blinking Yellow				Position symbol (FDB)
Data Block – Pointout Accepted (receiver)	Yellow	Yellow				Data blocks (FDB)
Position Symbol – Pointout Accepted (receiver)	Yellow	Yellow				Position symbol (FDB)
Data Block – Highlight, Multi-Track, RVSM Ineligible	Cyan	Cyan			Cyan	Data blocks (FDB, other, LDB)
Position Symbol – Highlight	Cyan	Cyan			Cyan	Position symbol (FDB)
Data Block – Highlight Blink, Multi-Track – Blink, RVSM Ineligible – Blink	Blinking Cyan	Blinking Cyan			Blinking Cyan	Data blocks (FDB, other, LDB)
Position Symbol – Highlight Blink	Blinking Cyan	Blinking Cyan			Blinking Cyan	Position symbol (FDB)
Sequence Number Group 1 to 4	white	white				Data blocks (FDB, other)
Runway Mismatch	Yellow	Yellow				Data blocks (FDB, other)
Lists (including System Status and Preview Areas)	Green	Green	Green	Green	Green	Lists
List Title	Green	Green			Green	Lists

Data Item	FSL Color (TCW)	FSL Color (TDW)	ESL Color (TCW)	ESL Color (TDW)	STARS LITE Color	FS Brightness
System Status Weather	Cyan	Cyan	Cyan	Cyan	Cyan	Lists
Coordination List (Unsent)	Green	Green				Lists
Coordination List (Unacknowledged)	Blinking Green	Blinking Green				Lists
Coordination List (Acknowledged)	Green	Green				Lists
Maps (Category A) (from 1 to 8) See note 1	Dim Gray	Yellow	Yellow	Yellow	Yellow	Map A
Maps (Category B) (from 1 to 8) See note 1	Dim Gray	Dim Gray			Dim Gray	Map B
Range Rings	Dim Gray	Dim Gray	Green	Green	Dim Gray	Range rings
Search Target Symbol (incl. ground range target symbol)	Blue	Blue	Green	Green	Blue	Primary targets (incl. ground range target symbol)
Beacon Target Symbol	Green	Green	Yellow	Yellow	Green	Beacon targets
History Trail (from 1 to 5)	Blue (1) – Blue (5)	Blue (1) – Blue (5)	Blue (1) – Blue (5)	Blue (1) – Blue (5)	Blue (1) – Blue (5)	Target history
Weather Color A (Levels 1, 2, 3)	Dark Gray Blue	Dark Gray Blue	Dark Gray Blue	Dark Gray Blue	Dark Gray Blue	Weather
Weather Color A (Option A) (Levels 1, 2, 3) See Note 2	Dark Gray Blue	Dark Gray Blue	Dark Gray Blue	Dark Gray Blue	Dark Gray Blue	Weather
Weather Color B (Levels 4, 5, 6)	Dark Mustard	Dark Mustard	Dark Mustard	Dark Mustard	Dark Mustard	Weather
Weather Color B (Option A) (Levels 4, 5, 6) See Note 2	Dark Mustard	Dark Mustard	Dark Mustard	Dark Mustard	Dark Mustard	Weather
Weather Stipple (Contrast)	Bright Gray	Bright Gray	Bright Gray	Bright Gray	Bright Gray	Weather contrast
Weather Stipple (Contrast) (Option A & B) See Note 2	Bright Gray	Bright Gray	Bright Gray	Bright Gray	Bright Gray	Weather contrast
Weather Level 1 (light) (Option B) See Note 2	WX Dark Gray	WX Dark Gray	WX Dark Gray	WX Dark Gray	WX Dark Gray	Weather
Weather Level 2 (moderate) (Option B) See Note 2	WX Dark Gray	WX Dark Gray	WX Dark Gray	WX Dark Gray	WX Dark Gray	Weather
Weather Level 3 (heavy) (Option B) See Note 2	Brown	Brown	Brown	Brown	Brown	Weather
Weather Level 4 (heavy) (Option B) See Note 2	Brown	Brown	Brown	Brown	Brown	Weather
Weather Level 5 (extreme) (Option B) See Note 2	Reddish Brown	Reddish Brown	Reddish Brown	Reddish Brown	Reddish Brown	Weather
Weather Level 6 (extreme) (Option B) See Note 2	Reddish Brown	Reddish Brown	Reddish Brown	Reddish Brown	Reddish Brown	Weather
Compass Rose	Dim Gray	Dim Gray	Dim Gray	Dim Gray	Dim Gray	Compass rose
DCB Background	Dark Gray Green	Dark Gray Green	Dark Gray Green	Dark Gray Green	Dark Gray Green	DCB

Data Item	FSL Color (TCW)	FSL Color (TDW)	ESL Color (TCW)	ESL Color (TDW)	STARS LITE Color	FS Brightness
DCB Button Background	Dark Green	Dark Green	Dark Green	Dark Green	Dark Green	DCB
DCB Button Shadow Top	Dark Gray	Dark Gray	Dark Gray	Dark Gray	Dark Gray	DCB
DCB Button Shadow Bottom	Black	Black	Black	Black	Black	DCB
DCB Button Highlight	Bright Yellow	Bright Yellow	Bright Yellow	Bright Yellow	Bright Yellow	DCB
DCB Button Foreground (Text – Normal)	White	White	White	White	White	DCB
DCB Button Selected Background	Selected Dark Green	Selected Dark Green	Selected Dark Green	Selected Dark Green	Selected Dark Green	DCB
DCB Button WX Available and Site Unavailable	Blue Gray	Blue Gray	Blue Gray	Blue Gray	Blue Gray	DCB
DCB Button WX Available & Selected and Site Unavailable & Selected	Selected Blue Gray	Selected Blue Gray	Selected Blue Gray	Selected Blue Gray	Selected Blue Gray	DCB
Cursor	White	White	White	White	White	Data blocks (FDB)
Range/Bearing Line	White	White			White	Tools
Predicted Track Line/Min. Separation	White	White			White	Tools
Geo Restriction (border/fill) (from 1 to 8) See note 1	Dim Gray	Dim Gray				Map B
Geo Restriction (text)	Yellow	Yellow				Map B
Geographic Restriction Area Blinking Text	Blinking Yellow	Blinking Yellow				Map B
FMA Runway	Gray	Gray				FMA Rwy. and course line map
FMA NTZ	White	White				FMA NTZ map
FMA Ref Lines	White	White				FMA Reference Lines map
FMA AMZ	Light Blue	Light Blue				FMA AMZ map
FMA Course Line	White	White				FMA Rwy. and course line map
FMA Fix Bar	White	White				FMA Rwy. and course line map
TPA color (TPA J-Ring, TPA Cone, ATPA Monitor Cone)	Blue (6)	White			White	TPA, ATPA
TSAS Slot Marker (Owned FDB)	White	White				TSAS Slot
TSAS Slot Marker (Owned FDB) - Blink	Blinking White	Blinking White				TSAS Slot
TSAS Slot Marker (Unowned)	Green	White				TSAS Slot
TSAS Slot Marker (PBN Override)	Orange (2)	Orange (2)				TSAS Slot
TSAS Slot Marker (PBN Override) - Blink	Blinking Orange (2)	Blinking Orange (2)				TSAS Slot

Data Item	FSL Color (TCW)	FSL Color (TDW)	ESL Color (TCW)	ESL Color (TDW)	STARS LITE Color	FS Brightness
TSAS Slot Marker (Non-Deconflicted)	Yellow	Yellow				TSAS Slot
TSAS Slot Marker (Non-Deconflicted) - Blink	Blinking Yellow	Blinking Yellow				TSAS Slot
TSAS Slot Marker (Pointout Attention)	Blinking yellow	Blinking yellow				TSAS Slot
TSAS Slot Marker (Pointout Accepted)	Yellow	Yellow				TSAS Slot
TSAS Slot Marker (Highlight)	Cyan	Cyan				TSAS Slot
TSAS Slot Marker (Handoff Attention Receiver)	Blinking White	Blinking White				TSAS Slot
TSAS Slot Marker Decorations (Owned FDB)	White	White				TSAS Slot
TSAS Slot Marker Decorations (Owned FDB) - Blink	Blinking White	Blinking White				TSAS Slot
TSAS Slot Marker Decorations (Unowned)	Green	White				TSAS Slot
TSAS Slot Marker Decorations (Pointout Attention)	Blinking Yellow	Blinking Yellow				TSAS Slot
TSAS Slot Marker Decorations (Pointout Accepted)	Yellow	Yellow				TSAS Slot
TSAS Slot Marker Decorations (Highlight)	Cyan	Cyan				TSAS Slot
TSAS Slot Marker Decorations (Handoff Attention Receiver)	Blinking White	Blinking White				TSAS Slot
TSAS Trajectories	White	White				TSAS Trajectories
Timeline STA flight	Cyan	Cyan				Timeline ACID
Timeline Owned flight	White	White				Timeline ACID
Timeline Non-owned flight	Green	Green				Timeline ACID
Timeline Non-flight data	White	White				Timeline Time

Note 1: Colors for maps (category A) 2 to 8, maps (category B) 2 to 8 and geo restriction (border/fill) 2 to 8 are unspecified in the preceding table.
Note 2: Option A & B are the two different color options for weather

Table 3.12.7-7 Color Coordinates

Name	Coordinate (R,G,B)
Black	0,0,0
Blue Gray	50,50,100
Bright Gray	200,200,200
Bright Yellow	255,255,153
Brown	172, 90, 0
Reddish Brown	204, 80, 0
Cyan	0,255,255
Blinking Cyan (on)	0,255,255
Dark Gray	85,85,85

Name	Coordinate (R,G,B)
WX Dark Gray	96, 96, 96
Dark Gray Blue	57,115,115
Dark Gray Green	10,20,10
Dark Green	0,44,0
Dark Mustard	124,124,64
Green	0,255,0
Green (1)	0,198,0
Green (2)	0,163,0
Green (3)	0,129,0
Green (4)	0,94,0
Green (5)	0,60,0
Selected Blue Gray	70,70,100
Selected Dark Green	0,78,0
White	255,255,255
Yellow	255,255,0
Blinking Yellow (on)	255,255,0
Red	255,0,0
Beige	255,150,90
Dim Gray	140,140,140
Blinking Green (on)	0,255,0
Blinking Red (on)	255,0,0
Blinking White (on)	255,255,255
Orange	255,55,0
Orange (2)	255,55,0
Blinking Orange (on)	255,55,0
Blinking Orange 2 (on)	255,55,0
Blue	30,120,255
Blue (1)	30,80,200
Blue (2)	70,70,170
Blue (3)	50,50,130
Blue (4)	40,40,110
Blue (5)	30,30,90
Blue (6)	90,180,255
Gray	128,128,128
Light Blue	173,216,230
Light Mustard	198,198,142

The Ident indication in a data block **shall[STARS-SSD-02194]** be displayed as follows:

a. When the special position indicator on an aircraft indicates an Ident condition
b. The data block of an unassociated target will blink when that aircraft indicates an Ident condition
c. Ident indication is displayed for targets within the altitude filter independent of the reported beacon code.

3.13 Additional

3.13.1 Preplanned Product Improvement (P3I)

3.13.1.1 Interfaces

Two-way interfaces **shall[STARS-SSD-02195]** supply data to and receive data from external systems.

A separate primary and backup communications path **shall[STARS-SSD-02196]** be implemented for each two-way interface.

Two-way interfaces **shall[STARS-SSD-02197]** be established via the AIG.

Each two-way interface **shall[STARS-SSD-02198]** be implemented in accordance with an ICD.

Failure of a two-way interface **shall[STARS-SSD-02199]** be detected automatically and initiate a reconfiguration to the backup path.

Two-way interfaces **shall[STARS-SSD-02200]** employ security features in accordance with Section 3.2.1.1.18.2.3, External Systems.

3.13.1.2 Specific P3I Capability Upgrades

3.13.1.2.1 Surveillance System Enhancements

STARS **shall[STARS-SSD-02201]** accept and process surveillance message data in other formats as specified in IRDs to be supplied by the Government.

3.13.1.2.2 Integrated Terminal Weather System (ITWS)

STARS **shall[STARS-SSD-02202]** interface to ITWS in accordance with two-way interface requirements.

The ITWS interface **shall[STARS-SSD-02203]** support weather messages in accordance with an IRD to be supplied by the Government.

STARS **shall[STARS-SSD-02204]** perform ITWS support functional processing in accordance with functional specifications to be supplied by the Government.

3.13.1.2.3 ASR-9 Wind Shear Processor

STARS **shall[STARS-SSD-02205]** interface to the ASR-9 Wind Shear Processor in accordance with an IRD to be provided by the Government.

STARS **shall[STARS-SSD-02206]** process and display ASR-9 Wind Shear Processor data in accordance with functional specifications to be provided by the Government.

3.13.1.2.4 Terminal Doppler Weather Radar (TDWR)

STARS **shall[STARS-SSD-02207]** interface to the TDWR in accordance with an IRD to be supplied by the Government.

STARS **shall[STARS-SSD-02208]** process and display TDWR data in accordance with functional specifications to be supplied by the Government.

3.13.1.2.5 Data Link Communications
STARS **shall[STARS-SSD-02209]** interface to Data Link in accordance with two-way interface requirements.

The Data Link interface **shall[STARS-SSD-02210]** support messages in accordance with an IRD to be supplied by the Government.

STARS **shall[STARS-SSD-02211]** perform Data Link support functional processing in accordance with functional specifications to be supplied by the Government.

3.13.1.2.6 CA and MCI Alert Enhancements
CA and MCI algorithms **shall[STARS-SSD-02212]** be enhanced to improve the probability of detection of aircraft conflicts.

CA and MCI algorithms **shall[STARS-SSD-02213]** be enhanced to reduce the probability of false alarms.

CA and MCI algorithms **shall[STARS-SSD-02214]** be enhanced to employ the multi-sensor tracking features of the surveillance system enhancements.

3.13.1.2.7 Traffic Management Enhancements
STARS **shall[STARS-SSD-02215]** interface to Traffic Management Enhancements in accordance with two-way interface requirements.

The Traffic Management Enhancements interface **shall[STARS-SSD-02216]** support messages in accordance with an IRD to be supplied by the Government.

STARS **shall[STARS-SSD-02217]** perform Traffic Management Enhancements support functional processing in accordance with functional specifications to be supplied by the Government.

3.13.1.2.8 Supplemental Flight Data Processing (FDP)
FDIO Replacement Alpha Numeric Keyboard (RANK) functions **shall[STARS-SSD-02218]** be performed at the TCW.

FDIO Cathode Ray Tube (CRT) functions **shall[STARS-SSD-02219]** be provided at the TCW.

STARS equipment **shall[STARS-SSD-02220]** perform the functions of the FDIO Replacement Flight Strip Printer (RFSP).

The interface to the Central Control Unit (CCU) of the FDIO system **shall[STARS-SSD-02221]** meet the characteristics specified in the Flight Data Input/Output Program Software Interface Control Document (NAS-MD-581).

FDP functions **shall[STARS-SSD-02222]** be in accordance with a functional specification to be provided by the Government.

Electronic display and manipulation of flight data **shall[STARS-SSD-02223]** be in accordance with functional specifications to be provided by the Government.

The STARS/STARS interfacility interface **shall[STARS-SSD-02224]** exchange data directly with up to seven other STARS facilities.

The STARS/STARS interfacility interface **shall[STARS-SSD-02225]** be in accordance with a vendor defined ICD.

The STARS/STARS interfacility interface messages **shall[STARS-SSD-02226]** be in accordance with the STARS to ARTCC for IFDT ICD (NAS-IC-21058100).

3.13.1.2.9 TCP-Defined Airspace

TCP-defined airspace **shall[STARS-SSD-02227]** be displayed on the TCWs.

3.13.1.2.10 FSL TCP Display Data Fields

A data field **shall[STARS-SSD-02228]** define aircraft equipment.

A data field **shall[STARS-SSD-02229]** define adaptable special equipment indicators to include Traffic Alert and Collision Avoidance System (TCAS), GPS, and Data Link at a minimum.

4 Qualification Provisions

4.1 Quality Assurance

4.1.1 ISO Standards

STARS shall be developed and produced in accordance with Quality Assurance (QA) provisions as defined in ISO AS9100D, Quality Management Systems – Requirements for Aviation, Space, and Defense Organizations.

4.1.2 Completeness

The quality assurance provisions shall ensure that engineering design and development are complete, that design risks are minimized, and that all delivered hardware, software, and documentation meet specified requirements.

4.1.3 Detection of Deficiencies

The quality assurance provisions shall also ensure that the methods of design, construction, inspection, and testing provide early detection of deficiencies and assure prompt, effective corrective action.

4.2 Test Program

4.2.1 Test Strategy
The test program shall verify that the STARS is in compliance with all applicable requirements contained in Section 3 of this specification.

4.2.2 Traceability
Every requirement in Section 3 of this specification shall be allocated to at least one test.

4.2.3 Test Conduct

4.2.3.1 Success Criteria
Each test shall have success criteria.

4.2.3.2 Pass/Fail
Each test shall be conducted on a pass/fail basis.

4.2.3.3 Pass/Fail Criteria
The pass/fail criteria shall provide a clear and unambiguous objective for the determination of test success or failure.

4.2.3.4 Test Completeness
A test shall be considered complete when the test has been executed without aborts or errors (unless they are part of the test procedure) and when all analyses have verified correct operation and compliance with all applicable requirements.

4.2.3.5 Test Repeatability
Each test shall be capable of being repeated and achieve the same results.

4.2.3.6 Discrepancies
Discrepancies between actual and expected test results shall be explained by analysis of test data.

4.2.4 Test Methods

4.2.4.1 Applicability
The verification methods identified herein shall be applicable to all requirements identified in this specification as assigned in the QRTM.

4.2.4.2 Inspection
Inspection shall be defined as the visual examination of system components, documentation, etc.

4.2.4.3 Analysis
Analysis shall be defined as the processing of accumulated data obtained from other qualification methods. Examples are reduction, interpolation, or extrapolation of test results.

4.2.4.4 Demonstration
Demonstration shall be defined as the operation of the system, or a part of the system, that relies on observable functional operation not requiring the use of instrumentation, special test equipment, or subsequent analysis.

4.2.4.5 Test
Test shall be defined as the operation of the system, or a part of the system, using instrumentation or other special test equipment to collect data for later analysis.

4.2.4.6 Review
Review shall be defined as the presentation at a formal design review and Government approval of specific design data that supports compliance.

4.2.5 Program Technical Reports (PTR)

4.2.5.1 PTR Objective
Each PTR shall describe a single hardware or software anomaly.

4.2.5.2 PTR Classifications

4.2.5.2.1 Type I
Prevents or precludes the performance of an operational or mission essential capability specified by SSD requirements, or jeopardizes safety or security.

4.2.5.2.2 Type II
Adversely affects but does not preclude the performance of an operational, mission essential, or key support capability specified by SSD requirements so as to degrade performance, and a workaround solution is not available.

4.2.5.2.3 Type III
Adversely affects but does not preclude the performance of an operational, mission essential, or key support capability specified by SSD requirements so as to degrade performance, and an acceptable workaround is available.

Developmental workaround solutions are to allow the system to proceed into the test phase, and do not modify, change, or delete specified SSD requirements.

4.2.5.2.4 Type IV
Prevents or adversely affects the performance of a non-essential capability specified by SSD requirements, and can be handled procedurally.

4.3 Test Requirements

4.3.1 Applicability
The test requirements described herein shall apply to all requirements in Section 3 of this specification.

4.3.2 Installation and Integration

4.3.2.1 Installation
Installation tests shall verify that the installed hardware is functioning correctly to begin integration testing.

4.3.2.2 Installation Tests
Installation tests shall include the following:

a. Tests that verify that the hardware components are integrated into a functional system.

b. Tests that exercise all data paths and Input/Output (I/O) channel paths and exercise all units in the full hardware complement.

4.3.2.3 Integration Testing
Tests shall verify that the newly installed STARS equipment is correctly integrated with the Government Furnished Equipment (GFE) in accordance with the associated Interface Control Documents (ICDs) Interface Requirements Documents (IRDs) Sections 3.3, STARS External Interfaces, and 3.4, STARS Internal Interfaces of this specification and including any applicable transition devices.

4.3.3 Scenarios

4.3.3.1 Test Scenario
Test scenarios shall contain chronological sequences of all events and conditions required for the conduct of a particular test.

4.3.3.2 Background Scenario

4.3.3.2.1 Purpose
A Background Scenario shall provide an operationally realistic system background while test cases are executed.

4.3.3.2.2 Characteristics
The Background Scenario shall have the following minimum characteristics:

a. Minimum of four (4) hours duration
b. Surveillance and track data distributed across all airspace sectors throughout the scenario
c. Associated and unassociated tracks throughout the scenario; between 90% and 95% of the tracks shall be beacon tracks, the remainder shall be search radar report tracks. Between 80% and 85% of the beacon tracks shall be discrete
d. Arrival and departure tracks distributed within terminal altitude ranges and terminal speed ranges throughout the scenario
e. Flight paths that generate Conflict Alerts and Minimum Safe Altitude Warning (MSAW) alerts at a minimum frequency of one (1) each per two (2) minutes

f. Average workload (including targets, tracks, and input actions) of the Background Scenario shall be between 30% and 35% of the maximum stress workload specified in the STARS Specification
g. At any given time, the minimum workload shall be no less than 20% of the maximum stress workload specified in the STARS Specification
h. Weather data for a minimum of 75% of the scenario duration

4.3.3.3 Maximum Stress Workload Scenario

4.3.3.3.1 Purpose
A Workload Scenario shall provide a maximum stress system environment for the execution of workload tests.

4.3.3.3.2 Workload Scenario Length
The maximum stress workload scenario shall run for a minimum period of three (3) hours.

4.3.3.3.3 Concurrent Workload
The workload requirements listed in Tables 3.2.1.1.23-1 through 3.2.1.1.23-6 and Tables 3.2.1.2.10-1 through 3.2.1.2.10-6 shall be applied to both ESL and FSL simultaneously to provide the maximum stress workload scenario.

4.3.3.3.4 Steady-State Period
The maximum stress workload defined in Tables 3.2.1.1.23-1 through 3.2.1.1.23-6 and Tables 3.2.1.2.10-1 through 3.2.1.2.10-6 shall be sustained for a period of at least one hour.

4.3.3.3.5 TCW Workload
The maximum stress workload scenario shall provide a workload in accordance with Table 3.2.1.1.23-8 and Table 3.2.1.2.10-8 during the entire steady-state period for at least one ATC TCW.

4.3.3.3.6 Distributed Load
The load imposed by the scenario shall be distributed over all of the physical and simulated control positions used in the test throughout the steady-state period of the maximum stress workload test.

4.3.3.3.7 System Configuration
The maximum stress workload test shall be conducted using a system configuration with a mix of actual and simulated ATC TCW/TDWs and MCWs.

4.3.4 Development Test and Evaluation (DT&E)

4.3.4.1 DT&E Components
DT&E shall consist of the following tests:
a. FAA Technical Center Installation and Integration
b. Non-Operational Test
c. FAA Technical Center System Acceptance Test
d. Key Site System Acceptance Test

4.3.4.2 FAA Technical Center Installation and Integration

The installation and integration tests specified in Section 4.3.2, Installation and Integration shall have been successfully completed for STARS prior to the conduct of any tests specified in this section.

4.3.4.3 Non-Operational Test

4.3.4.3.1 Purpose

Tests shall be executed one (1) time to verify the non-operational requirements specified below.

4.3.4.3.2 Safety

Safety requirements of Section 3.6 shall be verified.

4.3.4.3.3 System Environment

System Environments requirements of Section 3.8 shall be verified.

4.3.4.3.4 Reliability

Reliability requirements of Section 3.10, System Quality Factors, shall be verified for the 1st site.

4.3.4.3.5 Maintainability

Maintainability requirements shall be verified in accordance with Sections 3.10.1, 3.10.2, 3.10.3, and 3.10.4.

4.3.4.3.6 Design and Construction

Design and Construction requirements shall be verified in accordance with Section 3.11. See also section 4.3.4.4.6 for test requirements associated with section 3.11.1.1, Enhanceability.

4.3.4.4 FAA Technical Center System Acceptance Test

4.3.4.4.1 General Test Conditions

4.3.4.4.1.1 Test Configuration

Each test shall be conducted in a hardware and software configuration equivalent to an operational field site.

4.3.4.4.1.2 Data Recording

The system data recording capabilities, in accordance with 3.2.1.1.16 Data Recording, shall be utilized where necessary to verify the requirements.

4.3.4.4.1.3 Data Analysis

Post-test data analysis shall include the Data Reduction and Analysis (DR&A) in accordance with 3.2.1.3.3 where necessary to verify the requirements.

4.3.4.4.1.4 System Operations Functions

System operations functions shall be executing in the background.

4.3.4.4.2 Functional Tests

4.3.4.4.2.1 Scope
All functional tests shall be verified with their corresponding performance requirements.

4.3.4.4.2.2 Service Levels
Service Levels requirements of Section 3.1 shall verify Full Service and Emergency Levels and recovery and transition between these levels.

4.3.4.4.2.3 Computer Human Interface Testing
Computer Human Interface (CHI) requirements in Section 3.12.1 shall be tested in conjunction with DT&E Functional Tests.

4.3.4.4.2.4 Air Traffic Control Operational Functions

4.3.4.4.2.4.1 Purpose
These tests shall be conducted to verify the correct operation and performance of the system functions pertaining to Air Traffic Control (ATC) as specified in Section 3.2.1.1.1 through 3.2.1.1.11 for Full Service and 3.2.1.2.1 through 3.2.1.2.3 for Emergency Service.

4.3.4.4.2.4.2 Simulated and Real-Time Inputs
The tests shall be conducted using simulated inputs (to track aircraft, to transmit/receive real-time interfacility messages, and to transmit/receive real-time data on other interfaces) and real-time inputs from an actual radar site.

4.3.4.4.2.4.3 Concurrent Testing
At least two TCPs shall be operated concurrently.

4.3.4.4.2.4.4 System Response
Each input shall result in the correct operational system response (e.g., file update, display filtering, display update, message output, error message, response time).

4.3.4.4.2.4.5 Input Verification
Testing of input functions shall verify that all required display capabilities have been correctly and accurately implemented

4.3.4.4.2.4.6 Input Devices
If the same message may be entered from more than one input device type, then each applicable separate input device type shall be used for the entry of the particular message.

4.3.4.4.2.4.7 Display Verification
Tests of the STARS displays shall verify that all required displays are correctly formatted, contextually valid and accurately represent the required data

4.3.4.4.2.4.8 Data Verification
Requirements pertaining to data availability, data coding and appropriate data format shall be verified for all displays.

4.3.4.4.2.5 System Operational Functions

4.3.4.4.2.5.1 Purpose
System Operational Function Test shall verify the correct operation and performance requirements in accordance with Section 3.2.1.1.12 through 3.2.1.1.21 for Full Service and 3.2.1.2.4 through 3.2.1.2.9 for Emergency Service System Operational Functions.

4.3.4.4.2.5.2 Monitor and Control

4.3.4.4.2.5.2.1 System Status Monitoring
System Status Monitoring requirements of Section 3.2.1.1.12 and 3.2.1.2.4 shall be verified.

4.3.4.4.2.5.2.2 System Performance Monitoring
System Performance Monitoring requirements of Section 3.2.1.1.13 shall be verified.

4.3.4.4.2.5.2.3 Fault Insertion
Status monitoring tests shall include fault insertion tests to include tests of all major hardware and software components including faults and errors for each LRU.

4.3.4.4.2.5.2.4 Faults
At a minimum the faults shall include:

a. System integrity faults
b. System restart after a fault
c. Verification fault
d. Performance degradation fault
e. Automatic failure detection fault
f. Failure of the M&C position
g. Interface diagnostic test failure
h. Hardware component failure
i. Software component failure

4.3.4.4.2.5.2.5 System Control
System Control requirements of Section 3.2.1.1.14 and 3.2.1.2.5 shall be verified.

4.3.4.4.2.5.2.6 Performance Verification (PV)
PV requirements of Section 3.2.1.1.15 and 3.2.1.2.6 shall be verified to include the inducement of faults and errors to verify the on-line PV on a system with degraded functions.

4.3.4.4.2.5.2.7 PV Test Condition
PV tests shall be conducted while the operational software is executing.

4.3.4.4.2.5.3 Data Recording and Playback
Continuous Data Recording and Workstation Replay requirements of Sections 3.2.1.1.16 and 3.2.1.1.17 shall be verified.

4.3.4.4.2.5.4 System Security

4.3.4.4.2.5.4.1 Scope
Security requirements of Sections 3.2.1.1.18, 3.2.2.5.10, 3.2.3.10, and 3.7 shall be verified.

4.3.4.4.2.5.4.2 Identification and Authentication
Security tests shall verify that there are no known methods of bypassing the identification and authentication mechanisms.

4.3.4.4.2.5.4.3 Access Control
Security tests shall verify for known methods of bypassing security and mission critical data without being defined as a privileged authorized operator.

4.3.4.4.2.5.5 Independent Time Source
Independent time source requirements of Sections 3.2.1.1.19, 3.2.1.2.7, 3.2.1.3.5, 3.2.2.5.11, and 3.2.3.11 shall be verified.

4.3.4.4.2.5.6 System Operational Data Entry/Display
System operational data entry and display requirements of Sections 3.2.1.1.20, 3.2.1.2.8.1, 3.2.1.2.9, and 3.2.1.1.21 shall be verified.

4.3.4.4.2.6 System Support Functions

4.3.4.4.2.6.1 Purpose
System Support Test shall verify the correct operation and performance in Sections 3.2.1.3, 3.2.2, and 3.2.3.

4.3.4.4.2.6.2 Interfacility Test
Interfacility test function requirements of Section 3.2.1.3.1 shall be verified.

4.3.4.4.2.6.3 Simulation
Simulation requirements of Sections 3.2.1.3.2 and 3.2.1.3.6 shall be verified.

4.3.4.4.2.6.4 Data Reduction and Analysis (DR&A)
Data Reduction and Analysis (DR&A) requirements of Section 3.2.1.3.3 shall be verified.

4.3.4.4.2.6.5 On-Site System Maintenance
On-Site System Maintenance tests shall include verification of storage of hardware and software diagnostic results, execution of hardware diagnostics, verification of utilities, tools and diagnostic equipment, and verification of software management functions as defined in Section 3.2.1.3.4.

4.3.4.4.2.6.6 Off-Site System Maintenance
Off-Site System Maintenance tests shall include verification of all requirements in accordance with Section 3.2.2 including the STARS Central Support Complex (SCSC) requirements of Section 3.2.3.

4.3.4.4.3 Site Adaptation
Site Adaptation requirements of Section 3.5 shall be verified.

4.3.4.4.4 Computer Resource Utilization
Computer Resource requirements of Section 3.9 shall be tested by demonstrating that the measured utilization numbers are compliant with the specification. Compliance with Computer Resource requirements of Section 3.9 shall be formally determined once after each processor hardware upgrade. Subsequent measurements may be performed during regression tests, but the results will not be scored.

4.3.4.4.5 System Enhancement
Enhanceability shall be tested by verifying that hardware and software can be added without impact to the architecture in accordance with Section 3.11.1.1.

4.3.4.4.6 Scalability
Scalability shall be tested by verifying that the system can be scaled to the full range of configurations.

4.3.4.4.7 Performance Tests

4.3.4.4.7.1 Scope
Performance testing shall verify the system workload requirements, ATC functional algorithms and response time and update rates as specified in Section 3.2.1.1.23 for Full Service and 3.2.1.2.10 for Emergency Service.

4.3.4.4.7.2 Workload

4.3.4.4.7.2.1 Purpose
System workload tests shall verify the ability of STARS to operate in the maximum stress configuration at a maximum stress workload as defined in the system workload tables in Sections 3.2.1.1.23 and 3.2.1.2.10.

4.3.4.4.7.2.2 Scope
All performance requirements of Section 3.2.1.1.23 and 3.2.1.2.10 shall be verified using the Maximum Stress Workload Scenario as defined in Section 4.3.3.3.

4.3.4.4.7.2.3 TCW Individual Data Display Load
Workload requirements of Tables 3.2.1.1.23-7 and 3.2.1.2.10-7 shall be verified at each individual item data quantity for an individual TCW.

4.3.4.4.7.3 Response Times

4.3.4.4.7.3.1 System Response Time Measurements

The response time and utilization requirements defined in Section 3.2.1.1.23 and 3.2.1.2.10 and other pertinent performance statistics shall be measured and collected as the system operates at maximum stress workload conditions during the steady-state period.

4.3.4.4.7.3.2 Individual Data Display Workload

Response times for controller input messages and display outputs shall be measured at the TCWs in accordance with Tables 3.2.1.1.23-7 and 3.2.1.2.10-7, "FS Individual Data Display Workload" and "ES Individual Data Display Workload".

4.3.4.4.7.3.3 Simultaneous Data Display Workload

Response times for controller input messages and display outputs shall be measured at the TCWs in accordance with Table 3.2.1.1.23-8 and 3.2.1.2.10-8 "FS Simultaneous Data Display Workload" and "ES Simultaneous Display Workload".

4.3.4.4.7.4 Transition Times

Transition times of Section 3.2.1.1.23.4.18 through 3.2.1.1.23.4.24 and 3.2.1.2.10.4.15 through 3.2.1.2.10.4.21 shall be verified.

Testing of recovery times per Section STARS-SSD-01318, because of the practical limitations of collecting sufficient samples, shall take exception to SSD STARS-SSD-01301 (95th %tile), and instead be performed as follows:

a. Measure recovery times for 10 power fail recovery cycles, then take the average for comparison against the requirement.
b. If the system fails test a, measure recovery times for 10 additional power fail recovery cycles, then take the average over all 20 measurements for comparison against the requirement.
c. If a hardware failure prevents or delays recovery during any measurement, exclude that measurement from the average and continue the test once the fault has been repaired.

4.3.4.4.7.5 Tracking and Safety Algorithms

4.3.4.4.7.5.1 Displayed Target Position Accuracy

This test shall verify that the system meets the requirement for Displayed Target Position Accuracy defined in Sections 3.2.1.1.23.5.1 and 3.2.1.2.10.4.5.

4.3.4.4.7.5.2 Displayed Target Position Accuracy Data Points

The Displayed Target Position Accuracy test shall include at least 20 data points distributed throughout the adapted control region.

4.3.4.4.7.5.3 Tracking

Tracking tests shall verify that the system meets the performance requirements for Tracking defined in Section 3.2.1.1.23.5.2.

4.3.4.4.7.5.4 Safety Algorithms
Safety Algorithms tests shall verify that the system meets the performance requirements of Section 3.2.1.1.23.5.3 for Conflict Alert/Mode C Intruder and Section 3.2.1.1.23.5.5 for MSAW.

4.3.4.4.7.5.5 FMA
Performance requirements of Section 3.2.1.1.23.5.4 for FMA shall be verified with tests conducted in conjunction with their respective functional tests.

4.3.4.4.7.5.6 CRDA
Performance requirements of Section 3.2.1.1.23.5.6 for CRDA shall be verified with tests conducted in conjunction with their respective functional tests.

4.3.4.4.8 Interfaces

4.3.4.4.8.1 External System Interfaces

4.3.4.4.8.1.1 Scope
External interface tests shall verify that the system is compliant with the STARS External Interfaces defined in Section 3.3.

4.3.4.4.8.1.2 Background Scenario
External interface tests using simulation methods shall be conducted with the Background Scenario executing concurrently.

4.3.4.4.8.1.3 Actual Interfaces
A part of the external interface tests, actual interfaces shall be used that are available at the FAA technical Center connected to STARS and operating concurrently with operational data.

4.3.4.4.8.1.4 En Route Center
A test shall be conducted with STARS interface to the NAS En route system.

4.3.4.4.8.1.5 Maximum Capacity
A test of each interface shall be conducted at the maximum capacity for the particular interface as specified in the respective IRDs and ICDs.

4.3.4.4.8.1.6 Inputs
Interfaces shall be tested using simulated and actual inputs.

4.3.4.4.8.2 Internal System Interfaces

4.3.4.4.8.2.1 Scope
Internal System Interfaces tests shall verify that the system meets the requirements for STARS Internal Interfaces defined in Section 3.4.

4.3.4.4.8.2.2 Background Scenario
Internal system interfaces tests shall be shall be conducted with the Background Scenario executing concurrently.

4.3.4.4.8.2.3 Maximum Capacity
A test of each interface shall be conducted at the maximum capacity for the particular interfaces specified in the respective IRDs and ICDs.

4.3.4.4.9 Confidence and Stability Tests

4.3.4.4.9.1 Purpose
The confidence and stability tests shall verify that the system is stable and can operate for an extended period of time.

4.3.4.4.9.2 Duration
The confidence and stability test shall be operated continuously for seventy-two (72) hours.

4.3.4.4.9.3 Background Scenario
The Background Scenario shall execute for the duration of the test.

4.3.4.4.9.4 Response Time
The test shall verify that system response times are in accordance with Sections 3.2.1.1.23 FS Performance and 3.2.1.2.10 ES Performance.

4.3.4.4.9.5 Performance
The following performance metrics shall be taken throughout test:

a. Failures/Recoveries - general failure conditions (e.g., software recycling, hardware failures, manual interventions, resource failures).
b. Process Memory Utilization Growth (e.g., memory leakage)
c. CPU Utilization Growth
d. Track Count
e. Response Time Growth

4.3.4.4.10 Support Tools
Any tools, equipment, or software used to support DT&E shall have been successfully tested prior to any other testing.

4.3.4.4.11 System Internal Interfaces
The System Internal Interface requirements of Paragraph 3.4 shall be verified.

4.3.4.5 Key Site System Acceptance Test

4.3.4.5.1 Purpose
These tests shall ensure that the total STARS functions in the key site environment, and that it is fully compatible with and properly interfaces with the other systems and facilities connected to the site.

4.3.4.5.2 Installation and Integration
The installation and integration tests specified in Section 4.3.2, Installation and Integration, shall have been successfully completed for STARS prior to the conduct of any tests specified in this section.

4.3.4.5.3 Test Conditions

4.3.4.5.3.1 Hardware and Software
The Key Site Acceptance Tests shall be conducted using all integrated hardware and software of the STARS at the site.

4.3.4.5.3.2 Interfaces
Interface Tests shall use the actual interfaces at the Key Site.

4.3.4.5.3.3 Maximum Number of Interfaces
Testing shall incorporate the concurrent use of the maximum number of interfaces that the site will employ operationally.

4.3.4.5.3.4 TCWs and MCWs
Testing shall incorporate the use of the maximum number of TCWs and MCWs that the site will employ operationally.

4.3.4.5.3.5 Test Execution
The Key Site Acceptance Tests shall be conducted while STARS is executing operational software adapted to the site.

4.3.4.5.4 Functional Tests
The functional requirements specified in the STARS Capabilities, Section 3.2 shall be verified by performing a subset of the tests specified in Section 4.3.4.4.2.

4.3.4.5.5 Key Site Adaptation
Site Adaptation, Section 3.5, shall be adapted to the actual parameters of the key site parameters.

4.3.4.5.6 Workload
Workload tests shall verify the ability of STARS to meet the requirements in accordance with Sections 3.2.1.1.23 FS Performance and 3.2.1.2.10 ES Performance, for the key site when the system operates at the key site workload.

4.3.4.5.7 Confidence and Stability
A confidence and stability test shall be performed on the STARS for the key site as defined in Section 4.3.4.4.9.

4.3.4.5.8 Verification Tests

4.3.4.5.8.1 Performance Verification
Tests shall be conducted to verify the PV capabilities specified in Section 3.2.1.1.15 and 3.2.1.2.6.

4.3.4.5.8.2 Inducement of Faults
Verification tests shall include the inducement of faults and errors to verify the On-line PV on a system with degraded functions.

4.3.4.5.8.3 Component Faults
Tests of Verification shall include faults across hardware and software components.

4.3.5 Contractor Acceptance Test and Evaluation (CAT&E)

4.3.5.1 Scope
All tests specified in Section 4.3.5 shall be conducted using all integrated hardware and software components that comprise STARS, and shall be conducted while the STARS is executing operational software.

4.3.5.2 Site Installation and Integration
The tests specified in Sections 4.3.2, Installation and Integration, shall have been successfully completed prior to the conduct of any tests specified in this section.

4.3.5.3 Use of Adaptation Data
The tests shall be conducted using the adaptation data of the operational site.

4.3.5.4 Site System Acceptance Tests

4.3.5.4.1 Scope
CAT&E Site System Acceptance Tests, conducted either at each site or at the Central System Preparation Facility, shall consist of a subset of FAA Technical Center System Acceptance Tests and Key Site Acceptance Tests.

4.3.5.4.2 Functional Tests
The functional requirements specified in the System Capabilities, Section 3.2 shall be verified by performing a subset of the tests specified in Section 4.3.4.4.2.

4.3.5.4.3 Workload
Workload tests shall verify the ability of STARS to meet the requirements specified in Sections 3.2.1.1.23 and 3.2.1.2.10, System Performance for the operational site.

4.3.5.4.4 Confidence and Stability
A confidence and stability test shall be performed on the STARS for the site as defined in Section 4.3.4.4.9.

4.3.5.5 Performance Verification
The tests of PV specified in Sections 3.2.1.1.15 and 3.2.1.2.6 shall include the inducement of faults and errors to verify the On-line PV on a system with degraded functions.

4.4 Requirements Traceability Matrix
The traceability matrix shall be as defined in section 6.3.

5 Requirements Traceability
The traceability matrix shall include a cross reference between the SSD and fPRD requirements.

6 Notes

6.1 Acronyms and Abbreviations

ABPE	**Automatic Barometric Pressure Entry**
AC	**Alternating Current**
ACID	**Aircraft Identification**
ACP	**Azimuth Change Pulse**
ADS	**Automatic Dependent Surveillance**
ADS-B	**Automatic Dependent Surveillance Broadcast**
AIG	**Applications Interface Gateway**
AMASS	**Airport Movement Area Safety System**
AMZ	**Active Monitored Zone**
ANSI	**American National Standards Institute**
APEX	**Automated Protocol Exchanger**
ARMT	**Airport Resource Management Tool**
ARSR	**Air Route Surveillance Radar**
ARTCC	**Air Route Traffic Control Center**
ARTS	**Automated Radar Terminal System**
ARV	**Approach Runway Verification**
ASCII	**American Standard Code for Information Interchange**
ASR	**Airport Surveillance Radar**
ASSC	**Airport Surface Surveillance Capability**
ASTERIX	**All purpose STructured Eurocontrol Radar Information eXchange**
ATC	**Air Traffic Control**
ATCRBS	**Air Traffic Control Radar Beacon System**
ATCS	**Air Traffic Control Specialist**
ATCT	**Airport Traffic Control Tower**
ATIS	**Automatic Terminal Information Service**
ATPA	**Automated Terminal Proximity Alert**
CA	**Conflict Alert**
CARTS	**Common Automated Radar Terminal System**
CAS	**Commercially Available Software**
CASA	**Controller Automated Spacing Aid**
CAT&E	**Contractor Acceptance Test and Evaluation**
CCU	**Central Control Unit**
CD-2	**Common Digitizer**

CDR	**Continuous Data Recorder**
CGW	**Communications Gateway**
CHI	**Computer Human Interface**
CJI	**Controller Jurisdiction Indicator**
CM	**Configuration Management**
COTS	**Commercial-Off-The-Shelf**
CPU	**Central Processing Unit**
CRDA	**Converging Runway Display Aid**
CRT	**Cathode Ray Tube**
CTD	**Common Terminal Digitizer**
DASI	**Digital Altimeter Setting Indicator**
DCB	**Display Control Bar**
DCP	**Display Control Panel**
DMS	**Database Management Software**
DoD	**Department of Defense**
DR&A	**Data Reduction and Analysis**
DRD	**Data Recording Device**
DT&E	**Development Test and Evaluation**
EARTS	**Enroute Automated Radar Tracking System**
ECID	**En Route Computer ID**
EDC	**Early Display Configuration**
EIA	**Electronic Industries Association**
ESL	**Emergency Service Level**
ETA	**Estimated Time of Arrival**
FAA	**Federal Aviation Administration**
FAATC	**FAA Technical Center**
FCC	**Federal Communications Commission**
FDIO	**Flight Data Input/Output**
FDP	**Flight Data Processing**
FIPS	**Federal Information Processing Standards**
FMA	**Final Monitor Aid**
FSC	**Field Support Configuration**
FSL	**Full Service Level**
FTI	**Federal Telecommunications Infrastructure**
GFE	**Government Furnished Equipment**
GPS	**Global Positioning System**
GPW	**General Purpose Workstation**
HDR	**Hardware Discrepancy Report**
HNH	**Host-Non-Host**
HOL	**Higher Order Language**
Hz	**Hertz**
ICD	**Interface Control Document**
IDT	**Installation Data Tape**
IDV	**Imported Data Volume**
IEEE	**Institute of Electrical and Electronic Engineers**

IFDT	**Interfacility Data Transfer**
IFR	**Instrument Flight Rules**
I/O	**Input/Output**
IP	**Internet Protocol**
IRD	**Interface Requirements Document**
ISC	**Initial System Capability**
ISO	**International Organization for Standardization**
ITS	**Independent Time Source**
ITU-T	**International Telecommunications Union-Telecommunications Standardization Sector**
ITWS	**Integrated Terminal Weather System**
kV	**kilovolts**
LAN	**Local Area Network**
LCD	**Liquid Crystal Display**
LRR	**Long Range Radar**
LRU	**Line Replaceable Unit**
M&C	**Monitor and Control**
MASZ	**Military Alert Suppression Zone(s)**
MCI	**Mode-C Intruder**
MCP	**Monitor and Control Position**
MCW	**Monitor and Control Workstation**
MOA	**Military Operations Area**
Mode 3/A	**Identification Reporting Mode of Secondary Radar**
Mode C	**Altitude Reporting Mode of Secondary Radar**
MSAW	**Minimum Safe Altitude Warning**
msec	**milli-seconds**
MSSR	**Monopulse Secondary Surveillance Radar**
MTBF	**Mean Time Between Failure**
MTBCF	**Mean Time Between Critical Failure**
MTTR	**Mean Time To Repair**
NA	**Noise Abatement**
NACp	**Navigation Accuracy Categories for Position**
NACv	**Navigation Accuracy Categories for Velocity**
NAS	**National Airspace System**
NCMS	**NAS Cyber Monitoring System**
NFPA	**National Fire Protection Association**
NIC	**Navigation Integrity Categories**
NIST	**National Institute of Standards and Technology**
nmi	**nautical mile**
NOP	**National Offload Program**
NOZ	**Normal Operating Zone**
NTZ	**No Transgression Zone**
OCC	**Operations Control Center**
OCONUS	**Outside of the Continental United States**
OPIP	**Operational IP**

OSF	**Operational Support Facility**
P3I	**Pre-Planned Product Improvement**
PAM	**Parallel Approach Monitor**
PARROT	**Position Adjustable Radar Range Orientation Transponder**
PBN	**Performance Based Navigation**
PDARS	**Performance Data Analysis and Reporting System**
PE	**Permanent Echo**
pF	**pico Farad**
POSIT	**Profiles for Open Systems Internetworking Technologies**
POSIX	**Portable Operating System Interface**
PRM	**Precision Runway Monitor**
PTD	**Proposed Time of Departure**
PTL	**Predicted Track Line**
PTR	**Program Technical Report**
PV	**Performance Verification**
QA	**Quality Assurance**
RAID	**Redundant Array of Independent Disks**
RAM	**Random Access Memory**
RANK	**Replacement Alphanumeric Keyboard**
RAPCON	**Radar Approach CONtrol Facility (USAF)**
RCL	**Radio Communications Link**
RCV	**Recording Capacity Volume**
RFSP	**Replacement Flight Strip Printer**
RML	**Radar Microwave Link**
RNAV	**Area Navigation**
RNP	**Required Navigation Performance**
ROM	**Read-Only Memory**
RTQC	**Real Time Quality Control**
RVSM	**Reduced Vertical Separation Minimum**
SAC	**System Area Code**
SBS	**Surveillance and Broadcast Services**
SCP	**Software Change Proposal**
SCSC	**STARS Central Support Complex**
SDC	**Software Development Configuration**
SDP	**Service Delivery Point**
SIC	**System Identity Code**
SIFA	**STARS Interchange Format Agreement**
SIL	**Surveillance Integrity Level**
SIM	**Sensor Interface Modernization**
SIO	**Serial Input Output**
SLOC	**Source Lines of Code**
SMA	**Surface Movement Advisor**
SMC	**Software Maintenance Configuration**
SMR/PDR	**System Monitoring Report/Performance Data Report**

SPS	**Standard Positioning Service**
SQL	**Structured Query Language**
SRR	**Short Range Radar**
SSS	**Site Support Server**
STARS	**Standard Terminal Automation Replacement System**
STC	**Software Test Configuration**
STDDS	**SWIM Terminal Data Distribution System**
SWIM	**System Wide Information Management**
TAS	**Terminal Automation Subsystem**
TBFM	**Time Based Flow Management**
TCAS	**Traffic Alert and Collision Avoidance System**
TCID	**Terminal Computer Identifier**
TCP	**Terminal Controller Position**
TCW	**Terminal Controller Workstation**
TDW	**Tower Display Workstation**
TDWR	**Terminal Doppler Weather Radar**
TFMS	**Traffic Flow Management System**
TIA	**Telecommunications Industry Association**
TMU	**Traffic Management Unit**
TPA	**Terminal Proximity Alert**
TRACON	**Terminal Radar Approach CONtrol**
TSAS	**Terminal Sequencing and Spacing**
TU	**Track Update (Message ID)**
TZ	**Flow Control Track /Full Data Block Information (Message ID)**
UL	**Underwriters Laboratory**
US	**United States**
UTC	**Coordinated Universal Time**
VFR	**Visual Flight Rules**
WAN	**Wide Area Network**
WAM	**Wide Area Multilateration**

6.2 Definitions

Abbreviated Flight Plan - An ATC authorized flight plan which contains only a small portion of the normal flight plan information and includes, at a minimum, aircraft identification (ACID), location, destination and pilot request.

ABC Keyboard - The ABC keyboard is augmented with the addition of two rows of ten menu keys each, above the space bar, and some modified key cap legends.

Access Control - The process of limiting access to resources and objects based on the identity of subjects and/or groups to which they belong. This is accomplished through the use of appropriate physical, procedural, and hardware/software controls.

Accountability - The property that enables activities on a system to be traced to individuals with the time, method and degree of access to a system, who may then be held responsible for their actions.

Active Flight Plan - A flight plan for a flight for which an actual departure time or estimated fix time has been entered, whether the flight originates inside or outside the control area.

Active Monitored Zone (AMZ) - A predefined volume of airspace having the following characteristics:

a. Defines a boundary:
   1. Inside of which targets undergo specified Final Monitor Aid (FMA) simultaneous approach monitoring functions.
   2. Outside of which targets are displayed, but not processed by FMA functions
b. Any one AMZ may be selected at any TCW in FMA mode.
c. Each AMZ may include various combinations (duals, triples, quads) of two to four parallel runways, as well as graphical elements needed for monitoring.
d. For each set of parallel runways, one set of AMZs is normally used for each of the two flow directions. For airports with multiple sets of intersecting parallel runways, separate sets of AMZs are used for each flow direction.
e. Each AMZ may be adapted to support either of the following surveillance sensor inputs:
   1. Mode-S ASR-9 (nominally 5-second update)
   2. Rapid-update (nominally 1-second) multilateration or ADS-B
f. Each AMZ fits entirely within the specified minimum sensor coverage volume.

Active Tracks - Tracks that are being correlated, corrected, and predicted for every scan.

Adaptation - The process by which automation application software is made unique to provide the required service at a specific site. The system-wide adaptation parameters defined for a specific system design allow a single software build/baseline to service all terminal areas. The site-specific adaptation parameters defined for a specific system design allow a single system software build/baseline to be customized for operation at any site. Adaptation is conducted to support system scalability and to define the specifics of the system hardware and software configuration, message validation and formulation, display organization and content, function parameters, and other location, destination and control parameters.

Adaptation Type - Refers to whether an adaptation parameter is system-wide or site-specific.

Aircraft Address (also known as Target Address) **-** A unique ICAO 24 bit Aircraft Address for an individual aircraft. 16,777,214 aircraft addresses are allocated in blocks by ICAO to the state of registry, or common mark registering authority, for assignment to aircraft according to their country of registration. The address serves only a technical role for addressing and identification of aircraft and is not used to convey any specific information. The address composed of 24 ZEROs or 24 ONEs is not assigned to aircraft.

Aircraft Call Sign - Designate of an aircraft for ATC purposes. For a scheduled airline flight the call sign is composed of a 3 letter prefix (i.e. the airline identifier) and a suffix which can contain up to 4 characters. Note that aircraft identification 'call signs' used by pilots and controllers vary depending on the type of operation the aircraft is involved in. (See Aircraft Identification).

Aircraft Identification - 1 – 7 characters corresponding to the aircraft call sign. Unlike the Target Identification, this information is part of the aircraft's flight plan, but is not broadcast by the aircraft.

Aircraft Registration - An aircraft registration is a unique alphanumeric string that identifies a civilian aircraft. Because airplanes typically display their registration numbers on the aft fuselage just forward of the tail, in earlier times more often on the tail itself, the registration is often referred to as the "tail number".

Air Route Surveillance Radar (ARSR) - Long range radar (approx. 240 nm radius) used primarily to detect and display an aircraft's position while en route between terminal areas. The ARSR enables controllers to provide radar air traffic control service when aircraft are within the ARSR coverage. The ARSR may enable a facility to provide limited terminal radar services similar to, but less accurate than, those provided by an approach control radar (ASR).

Air Route Traffic Control Center (ARTCC) - A facility established to provide air traffic control service to aircraft operating on an IFR flight plan within controlled airspace and principally during the en route phase of the flight. When equipment capabilities and controller workload permit, certain advisory/assistance services may be provided to VFR aircraft.

Air Traffic - Aircraft operating in the air or on an airport surface other than loading ramps and parking areas.

Air Traffic Control (ATC) - A service operated by appropriate authority to promote the safe, orderly, and expeditious flow of air traffic.

Air Traffic Control Specialist (ATCS) - A person authorized to provide air traffic control service.

Air Traffic Controller - See Air Traffic Control Specialist.

Airport - An area on land or water that is used or intended to be used for the landing and takeoff of aircraft and includes its buildings and facilities, if any.

Airport Movement Area Safety System (AMASS) - A system that provides automated airport surface traffic monitoring capability, with aural and visual alerts when hazardous or potentially hazardous situations occur, to aid tower cab controllers in the prevention of runway accidents.

Airport Surveillance Radar (ASR) - Approach control radar used to detect and display an aircraft's position in the terminal area. ASR provides range and azimuth information but does not provide elevation data. Coverage of the ASR can extend up to 60 nm.

Airport Traffic Control Tower (ATCT) Tower Cab - The terminal facility from which final approach (radar or non-radar), landing and takeoff air traffic control services are provided under both IFR and VFR conditions. Air Traffic Controllers within ATCT, use air/ground communication, visual signaling, STARS Tower Display Workstation (TDW) and other automation systems to provide ATC services to aircraft operating in the vicinity of an airport.

Airway - A control area or portion thereof established in the form of a corridor, the centerline of which is defined by radio navigational aids.

Alarm - A visual indication of an alarm condition which may be reinforced by an audio signal.

Alarm Condition - A situation that occurs when, the value of a monitored parameter is outside its specified or acceptable range.

Alert - A visual indication of an alert condition which may be reinforced by an audio signal.

Alert Condition - The situation when the value of a monitored parameter is outside the specified ideal range but within the acceptable range.

Alignment (or Aligned) with Runway - An attribute of a track with Stabilized Heading (relative to runway heading) that is within lateral tolerance of the runway centerline. The lateral tolerance will typically be defined by adapted value or adapted geographic zone.

Alphanumeric - A character consisting of both letters and numbers and often other symbols such as punctuation marks and mathematical symbols.

Analysis - The method of verification which consists of the processing of accumulated data obtained from other qualification methods. Examples are reduction, interpolation, or extrapolation of test results.

And - "And" is used in this specification as the logical "and". For a requirement which refers to x "and" y, both x and y must be satisfied.

Architecture - The organizational structure of system resources and the concept of interaction among them.

Area Navigation (RNAV) - A method of navigation that permits aircraft operation on any desired flight path within the coverage of ground or space−based navigation aids or within the limits of the avionics onboard the aircraft, or a combination of these.

Assigned Altitude - The altitude assigned by the controller for a particular flight. This data is saved in the flight plan record for an associated track.

Assigned Runway - The runway assigned to a given track.

Associated Track - A track which that matched with a flight plan and assigned to a TCP.

Association - The link between a flight plan and track resulting from the acquisition process.

Assurance - A measure of confidence that the security features and architecture of an automated information system accurately mediate and enforce the security policy.

ASTERIX - All-purpose Structured EUROCONTROL Radar Information Exchange (ASTERIX) data formats. These formats have been jointly agreed to by the FAA and EUROCONTROL for the purpose of developing an international standard. Using ASTERIX provides the benefits of standardization with the capability to tailor the data items to the specific needs of the surveillance system and the automation system.

Authenticate - (1) To verify the identity of an operator, device, or other entity in a computer system, as a prerequisite to allowing access to resources in a system. (2) To verify the integrity of data that has been stored, transmitted, or otherwise exposed to possible unauthorized modification.

Auto Hand-off / Pointout Inhibit List - A special list that contains those positions or facilities where automatic hand-offs or automatic pointouts have been inhibited.

Auto-Track Initiation - The process of starting, a track without manual intervention.

Automated Terminal Proximity Alert - ATPA Cones are automatically displayed between two associated tracks in an ATPA Approach Volume to monitor separation or when a loss of lateral separation is predicted to occur or has occurred. The size of the ATPA cone is based upon the separation criteria for the flight's weight class and the owner's display selection. The ATPA Cone is oriented toward the lead track. The ATPA Cones are seen at the adapted list of displays per Approach Volume (including the owner's display).

Automatic Acquisition - The process whereby flight plan data, is associated with an active track.

Automatic Barometric Pressure Entry (ABPE) - The process by which barometric pressure from DASI is automatically entered into the TAS, thus, alleviating the need for a controller to enter it manually.

Automatic Dependent Surveillance - Broadcast - is an advanced surveillance technology that enables equipped aircraft, or surface vehicles, to periodically broadcast their identification, position, altitude, velocity, and other information.

Automation Application Software - Custom software developed in an HOL which operates in conjunction with commercially available software (CAS) and the system hardware to provide information and conduct data transfer necessary to safely control air traffic within the terminal area, maintain the system, and conduct system training.

Availability - The degree, often expressed as probability, to which a system or component is operational and accessible when required for use.

Baseline - The initial configuration of any item (including software, hardware, requirements and documentation) which is formally designated and managed by a unique identifier and which is "frozen" at a specific time during the configuration items life cycle. The baseline, plus any approved changes, constitutes the current configuration.

Beacon - A ground navigational light, radio or radar transmitter used to provide aircraft in flight with a signal to serve as a reference for the determination of accurate bearings or positions.

Beacon Azimuth Split -Two Beacon reports from a single target. Both reports contain the same beacon code, occur within the same scan, are in the same range cell (i.e. have identical range) and are separated in azimuth by no more than 45 ACPs.

Beacon Blip/Scan - The ratio between the average number of times all Beacon targets are detected in a scan compared to the maximum number of hits per scan.

Beacon Code - The number assigned to a particular multiple pulse reply signal transmitted by a transponder.

Beacon Code Block - A set of beacon radar codes used in target beacon code selection.

Beacon Radar - A radar system in which the object to be detected is fitted with cooperative equipment in the form of a radio receiver/transmitter (transponder). Radar pulses transmitted from the searching transmitter/receiver (interrogator) site are received in the cooperative equipment and used to trigger a distinctive transmission from the transponder. This reply transmission, rather than a reflected signal, is displayed at an air traffic control facility.

Beacon RTQC Reliability - The number of beacon radar sector mark and RTQC messages received compared to the number of beacon radar sector mark and RTQC messages expected.

Beacon Target - A target, that results from an aircraft transponder reply to a radar interrogation.

Blink - The cyclical modulation of the intensity or brightness of a displayed object between full and zero intensity.

Blink Coding - Emphasis coding which causes specified data to blink in an on/off cycle at an adapted rate.

Build - An operational version of the system software which satisfies all current functional and performance requirements.

Coldstart - The transition of system computer resources from any state, through an off-line state and to an on-line state. If the system computer resource starts in an off-line state, it will directly make the transition to an on-line state. A cold start causes a reload and restart of the operating system and the application software.

Collimation - The spatial alignment of search and beacon radar returns from the same target.

Collimation Error - The difference in range and azimuth between the search and beacon reports for the same aircraft using a common radar pedestal.

Command - Data input through file, pointers, menu selection, function keys, keystroke combination or other entry mechanisms.

Commercial Off-The-Shelf (COTS) - A hardware, software or firmware component which 1) is, or has been, offered, sold, leased, or licensed to the general public in the course of normal business operations at prices based on established catalog or market prices or 2) has been fully developed and tested, is in production, and does not meet the criteria of 1) above solely because it is not yet available in the commercial marketplace.

Commercially Available Software (CAS) - Software, for sale to the general public in the course of normal business operations at prices based on established catalog or market prices, which operates on the system hardware to perform fundamental and standard computer and network system services such as resource monitoring, data transfer, manipulation, processing, management, input and/or output. Examples include operating systems, databases, spreadsheets, editors, word processors, compilers, linkers, software build utilities and network managers.

Common Coordinate Systems - Coordinate systems with a common frame of reference, orientation, and origin for all system surveillance data.

Common Digitizer - Equipment suitable for the automatic detection, merging of search and beacon reports, and transfer of aircraft target information derived from long-range search surveillance radar and beacon radar systems.

Component - A collection of hardware or software elements considered as a single object for the purposes of monitoring and control.

Composite Traffic Volume (CTV) – A collection of Service Volumes (SVs) from which the data is aggregated and duplicate targets are filtered. Geographic filters can be adapted in STARS, which define overall areas of interest outside of which incoming data will be discarded. The update rate for the CTV will be dependent upon the update rate of the individual SVs comprising that CTV; in each SV the reports will be provided at the highest rate available for the SV.

Computer Hardware Resource Data Sampling Interval - An interval of time during which computer hardware utilization measurements are computed.

Computer Human Interface (CHI) - In physical terms, an aspect of a computer system, implemented in both hardware and software, which permits interaction between the user and the computer's coded computational procedures. The visual displays, input devices and dialogue taken together as a whole. In conceptual terms the set of features that support communication between the user and the computer.

Condition - A Boolean expression of parameter value and adaptable thresholds, valid over an interval of time.

Confidential - Protected from unauthorized disclosure.

Configuration - A set of resources, their interconnections and their states.

Configuration Plan - The mapping of positions to fix pairs used in airspace sectorization.

Conflict - Any situation that exists between two or more aircraft and the airspace, or an aircraft and the terrain or obstructions, for which minimum safe separation distance defined for the airspace under control are, or may be, violated.

Conflict Alert - An indication by the automation system that two tracked, associated, mode-C transmitting aircraft are in, or are predicted to be in, conflict.

Consolidation - The combining of terminal controller positions and transferring of control of tracks and flight plans to a specific position.

Control State - Represents the state of the interfaces as controlled by the MCP. It can be either "Online" or "Offline" and determines whether or not the interface is available for use from either the operational site side or the support site side.

Controlled Aircraft - Aircraft that are receiving and participating in traffic separation service provided by ground-based air traffic controllers.

Controller Position Symbol - A unique alphanumeric that indicates which controller is controlling an aircraft.

Coordination Fix - A geographical position used as a common reference point for coordination between facilities when performing hand-off and flight progress monitoring operations.

Correlation - The process whereby search/beacon radar data are uniquely paired with a given track. Correlation criteria usually include a code agreement and a distance criterion.

Coverage Zone (CZ) - A predefined volume of airspace for a rapid-update (nominally 1-second) multilateration or ADS-B surveillance sensor that:

a. Completely encloses any AMZs that depend on it for sensor coverage
b. Defines a boundary inside of which:
    1. The sensor reports targets, and
    2. The sensor indicates, via continuous self-monitoring, whether or not those targets that are within the specified minimum sensor coverage volume are collectively expected to meet specified sensor accuracy requirements.

Critical Failure - As applied to Status Monitoring requirements, a critical failure is one of the following:

a. Failure of the application software to report its status
b. Loss of communications between the application software and the X-server
c. Unrecoverable error detected by the application software
d. Loss of both RDP processors or both CGW processors or all adapted NUNIOs

Cutover - The process of transitioning the operational system to a new version of software and/or hardware.

Data Block - A conglomerate of alphanumeric and graphical data associated with a track and shown on a TCP. This conglomerate can be comprised of such data as Aircraft ID, Beacon Code, Altitude, TCP Position Symbol, ATPA Cones and Leader Lines and can be shown in various views such as Full, Limited or Unassociated.

Data Block Offset - The distance and direction the data block is placed with respect to the target. Data block offset may be accomplished manually or automatically.

Data Entry Device - See "Input Device."

Data Entry Set - See "Input Device Set."

Data Source Identifier - Generic name for the field in an ASTERIX message, that contains a System Area Code (SAC) and System Identity Code (SIC), that together identify the source from which a particular message originated.

Default Runway - The runway that will be entered as the Assigned Runway for an associated arrival track not assigned to a runway, based on fix pair, aircraft parameters, and the present Configuration Plan.

Demonstration - The method of verification which consists of operation of the system, or part of the system, that relies on observable functional operation not requiring the use of instrumentation, special test equipment, or subsequent analysis.

Depot - An FAA facility that serves as the major logistic support facility for on-site and central maintenance activities. The depot may return items for repair to a vendor facility when more cost effective. It supports the repair, alignment, calibration, complete overhaul and rebuilding of complex equipment.

Dial-Up State - Indicates whether or not an OSF or SCSC interface in the "Online" Control State currently has an active connection between the operational site and a support site. The Dial-Up state can be either "Active" or "Inactive".

An Active Dial-Up state indicates a connection has been established with a support site. It does not necessarily mean that data is currently being transferred on the interface.

An Inactive Dial-Up state indicates that no connection is currently established with a support site.

Discrete Code/Discrete Beacon Code - As used in the Air Traffic Control Radar Beacon System (ATCRBS), any one of the 4096 selectable Mode 3/A aircraft transponder codes except those ending in double zero and not 76xx, 77xx, or 1236.

Display - 1) The hardware component on which views of information are presented to the operator. Examples include a cathode ray tube (CRT), and a liquid crystal display (LCD). 2) The presentation of data and information to the system operator(s).

Display Coordinates - A coordinate system based on the actual location of an item in relationship to the display surface.

Emergency Service Level - The minimum STARS capability in which only limited functionality and performance are available.

Emitter Category - Represents the target's category code for the current position report. This identifies aircraft characteristics such as weight class, type (i.e. glider, UAV, parachutist, etc.) and much more.

Enhanceability - The ability to add, delete or adapt hardware and software components to provide new and/or improved functionality, capacity and/or performance without change to the architecture or design. STARS will be enhanceable to accommodate future air traffic load growth and P3I enhancements.

Error - A discrepancy between a computed, observed or measured value, or condition, and the true, specified or theoretically correct value or condition.

ESL Subsystem Computers - The CGW's, MCW's, TCW's and TDW's within the ESL Subsystem.

Established Search Track - An Active Track being correlated, corrected, and predicted using exclusively Search Targets received from the Surveillance System.

Event - An occurrence at an instance of time which is significant to the operation of the system, e.g. a component state transition, or to the conduct of ATC, e.g. a low altitude violation.
Exercise - A separate operational context characterized by a unique set of flight plans, tracks, configurations, and their processing. Exercises are identified by numbers. Exercise 0 is special because it is the identifier for the context of real, physical aircraft. Exercise 1 identifies the context of simulated data created as part of Performance Verification. Exercises 2 through 25 identify separate contexts of simulated data that support training.

External Interface - An interface with an entity that is not, part of the automation subsystem. This entity could be a non-STARS or another STARS subsystem.

External System Interface - The physical and logical connection between STARS and an external system.

Facility - The total electronic, environmental and electric power generation or distribution system, and the structures used to house, support, and/or protect the automation system and its operators. A facility may include a number of systems, subsystems, or equipment, e.g., a long-range radar facility, or it may in its entirety consist of only a single system, subsystem, or equipment such as an isolated Radar Microwave Link (RML)/Radio Communications Link (RCL) repeater facility.

Failure - The cessation of the ability of a system or any of its components to perform a specified function or set of functions.

False Beacon Target - A spurious target report which is generated in addition to the "true" target report.

Firmware - 1) A set of computer instructions fixed onto a memory chip. 2) A set of machine instructions which control the sequences and operation of the controller portion of a processor and which reside on a read-only memory (ROM) chip.

Fix - A geographical reference point expressed in latitude and longitude; fixes are uniquely identified in adaptation. A fix is both an aid for navigation and a reference point for control purposes.

Fix Pair - A set combination of fixes in a defined configuration table used to direct flight data to the appropriate control position. Flight data is assigned to a control position based upon two fixes and flight status. The first fix, the entry fix, represents the point at which the flight will enter the system, e.g., for arrival, the coordination fix; for departures, the departure airport. The second fix, the exit fix, is the point at which the flight will exit the system, e.g., for arrival, the destination airport; for departures, the coordination fix.

Flashing - The cyclical modulation of the intensity or brightness of a displayed object between full and minimum (non-zero) intensity. At minimum intensity, objects are discernible by the unaided eye.

Flight Data - All data applicable to a flight including but not limited to flight plan, flight amendment, and track information.

Flight Data Processing Interface Mode - The mode of processing flight information when the, NAS En Route system, has no radar data, but does have flight plan information.

Flight Number - Flight Number is provided by the Air Carrier (Airline) and is that which appears on the Airline Ticket and Boarding Card – e.g. VS012.

Flight Plan - Positional fix data (location, velocity) which defines the intended flight path of an aircraft. Flight plans are submitted, processed and distributed (1) to the TRACON prior to the entrance of the aircraft into the terminal airspace or (2) to the ARTCC for VFR flights. The arrival, departure, overflight, IFR or VFR status of the flight is indicated in the flight plan.

Flight Status - Any logical combination of: arrival, departure or overflight.

Full Service Level - The maximum STARS capability in which all specified operational and support functionality and performance are available.

Function - Any system capability.

Ground Range - The horizontal distance between the subpoint of the aircraft to an object on the ground.

Handoff - An action to transfer the identification of an aircraft from one controller to another if the aircraft will enter the receiving controller's airspace and radio communications with the aircraft will be transferred.

Hardware Component - From the design point of view, an integrated, tested collection of mechanical and electrical elements which perform simple or complex functions. Any hardware component may be configured in the on-line, off-line or standby state. From a logistics point of view, a collection of one or more, line replaceable units (LRUs).

Heading Accuracy - The difference between the heading used to, predict the displayed track position and the true heading of the aircraft.

Heavy Jet Indicator - An indication that an aircraft's, maximum gross, takeoff weight has exceeded, a specified limit.

Higher Order Language - One of many syntactic structures of computer source code that expresses machine-level operations in terms more nearly natural to the computer programmer and more compactly than assembler code.

Host-Non-Host (HNH) Facilities - TRACON/RAPCON facilities that are not directly connected to a terminal area's ARTCC. Handoff data for such facilities has to be sent to the terminal area's ARTCC to be forwarded to the ARTCC responsible for the destination TRACON/RAPCON. It also includes other ARTCC facilities with which handoffs may occur other than the terminal area's ARTCC.

Ident - A special feature in the ATC Radar Beacon System equipment, used to immediately distinguish one displayed beacon target from the other beacon targets. When an indication is received by the automation system from an aircraft transponder in the beacon radar message, the aircraft target symbol and/or data block is emphasized to the TCP.

Identification - The process that enables recognition of a security entity by a system, generally by the use of unique machine-readable operator names.

Implied Entries - Context-sensitive operator commands which have a minimized syntax and which support the entry of the command requiring only that the user position a cursor on an object and press "Enter." Entry of the command name/additional parameters is not required.

Inactive Flight Plan - Flight plans for which the first converted fix is within the control area and for which either no time or an inactive time group has been included.

Increased Separation - Used to refer to parameters, procedures and symbology relating to processing and display of a track based on a positional uncertainty sufficient to support greater than or equal to 5 Nmi separation procedures (default datablock mnemonic = "ISR").

Information Coding Techniques - Any method used to draw the operator's attention to specific data. The techniques include brightness coding, blink or flash coding, shape coding, color coding and size coding.

Initialization - A Warmstart or Coldstart (see definition of Coldstart and Warmstart).

In-Out-In Series - A single interfacility flight that, enters, exits and re-enters a TRACON's area of responsibility (as determined by En Route automation). The In-Out-In series consists of at least 2 interfacility flight plan legs that contain the same ACID, ECID, and assigned beacon code (or radar only). The legs of the series are sequenced by departure, overflight and then arrival status. The overflight legs are sequenced active first with the inactive overflights in the order of their coordination times where the first inactive overflight leg contains the earliest coordination time.

Input Device Set - A group of input devices from which all STARS data and command entry may be accomplished. Examples include a keyboard/trackball combination and a keyboard/mouse/touch panel combination.

Input Device - Any hardware component used by an operator to enter data and commands into STARS. Common examples include keyboard, trackball, mouse and touch panel.

Inspection - The method of verification consisting primarily of visual examination of system components or technical examination of engineering-support documentation.

Instrument Flight Rules (IFR) - The set of procedures and practices for operation and control of aircraft in which all controller and pilot decisions, actions and maneuvers are derived from aircraft and ground automation system output data.

Integrated Multiple Sensor Presentation - The display of multiple radar sensor data using a technique, that selects the best sensor data available with track updates from multiple sensors. This display presentation ensures that multiple registrations of the same radar target are eliminated.

Integrity - A security service which pertains to ensuring that data, and data in transit, continue to be a proper representation of information, and that information processing resources continue to perform correct processing operations.

Integrity Anomalies - Irregularities in data, or data in transit, that prevent the system from performing correct processing operations.

Internal Interface - An interface, between two entities, within a single STARS system. (e.g., between two processors or between a processor and a display workstation)

Inter-Facility - Between adjacent facilities: for example, between ARTCC and ARTCC, between ARTCC and TRACON, etc. Contrasted with, intra-facility.

Intra-Facility - Within a single facility: for example, between two positions within the same TRACON, etc. Contrasted with, inter-facility.

Leader - The line connecting the target symbol to the data block on the situation display.

Lexical - Aspects of the design that pertain to the user input language, including interaction techniques specific to each physical device, and the use of information coding strategies such as color, flashing and blinking.

Line Replaceable Unit (LRU) - An essential support item, that has been removed and replaced, at the field level, to restore the end item, to its full operational condition.

Local - Communication with STARS directly without the use of external interfaces.

Local Workstations - Workstations which have direct access to the STARS automation subsystem data without the use of GFE communications.

Log-on / Log-off - Input messages that are used by the security portion of the system to provide accountability for system message inputs.

Maintainability - A measure of the ease and speed with which a system or component can be repaired and returned to the on-line state following a failure.

Maintenance - Maintenance, as used in connection with Airway Facilities systems, subsystems, and equipment, is intended to mean any specified sequence of steps prescribed to accomplish an activity to verify or continue a system or service operating.

Maximum Time to Repair - The maximum time required to, localize a component failure, remove and replace the failed component and perform tests to confirm operational readiness of the component.

Mean Time Between Critical Failure - The average time between hardware or software component failures which result in a loss of service.

Mean Time Between Failure - The average time between hardware of software component failures which do not result in a loss of service.

Mean Time To Repair - The average time required to, localize a component failure, remove and replace the failed component and perform tests to confirm operational readiness of the component.

Military Operations Area (MOA) - Airspace established outside the Positive Control Area (PCA) to separate/segregate certain military activities from Instrument Flight Rules (IFR) traffic and to identify for VFR traffic where these activities are conducted.

Minimum Safe Altitude Warning (MSAW) - An indication (alarm/alert) by the automation system that the altitude of a tracked, associated, mode-C transmitting aircraft is in, or is predicted to be in, violation of the minimum safe altitude defined for the airspace under control.

Mission Critical Objects - Mission Critical Objects include the data categories: 1) Air Traffic Safety Critical Data: data whose availability and integrity are essential to flight safety, i.e. software image files, adaptation data, aircraft position data, radar data that supports the separation function. 2) Program Sensitive Data (DOD, Federal Law Enforcement Agencies, incident investigative data (based on MOAs), current weather reports and forecasts, status and diagnostic information, training data, etc.).

Modes - A mode is the manner, method, or way that a given resource behaves. For STARS, a mode is defined to possess all of the following properties:

a. Applies within a resource comprised of either a service level or an individual TCW or TDW.
b. Is mutually exclusive with other modes of the same resource type (combinations of enabled/disabled functions do not constitute distinct modes).
c. Represents substantially different behavior from other modes of the same resource type (parameter changes such as input selection, brightness, etc. do not constitute distinct modes).
d. Has requirements distinct from other modes of the same resource type.
e. Applies uniformly within the resource (i.e. to all tracks, targets, data blocks, windows, etc.).
f. Is selected by a human operator.

Mode C Non-Selected - Target is reporting Mode C altitude and is not within a beacon code filter selected by a TCP.

Mode C Selected Target. Target is reporting Mode C altitude and is within a beacon code filter selected by a TCP.

Mode 3/A - An interrogation mode by which a beacon transponder, automatically, reports identification when interrogated by a ground station. There are 4096 possible identification codes.

Mode 3/A Validity - The mode 3/A validity bit is set by the digitizer when two successive replies in a response from the same aircraft are identical. If two successive code matches are not found before the target trail edge then the validation bit is set to zero.

Mode C - An interrogation mode in which a beacon transponder automatically reports altitude when interrogated by a ground station.

Mode C Altitude - The altitude reported via a beacon radar transponder when interrogated by a ground station.

Mode C Intruder - An aircraft transmitting Mode-C (Transponder code and altitude) which is tracked but not associated with a flight plan and which is in conflict with (violates the separation standard minima) a tracked, associated, Mode-C transmitting aircraft.

Mode C Validity - The mode C validity bit is set when two successive replies in a response from the same aircraft are identical. If two successive code matches are not found before target trail edge then the validation bit is set to zero.

Monitor and Control Functions - The set of capabilities required to manage and maintain the system including, but not limited to, system status monitoring, system performance monitoring, system resource control, resource and performance verification, component verification, hardware and software maintenance, and data reduction and analysis.

Monitor and Control Position – See - "Position".

Monitor and Control Workstation (MCW) - The system workstation used to perform monitor and control functions. A single MCW will consist of one or more displays, input devices, processors and power supplies.

Multicasting - Delivery of a set of LAN messages to multiple recipients identified by a particular multicast IP address.

Multicast Group - A group of recipients that signed-up to receive the set of multicast messages sent to a particular multicast IP address.

Multiple Sensor Display – Presentation - The presentation of air traffic data from integrated multiple radar sensors as a single display presentation.

Navigational Error Zone (NEZ) - A predefined area of airspace located between the final approach courses of each adjacent pair of parallel runways, starting at the outer limit of the NTZ. This zone is a non-critical protection area in which an aircraft on final approach to its assigned runway is not expected to enter.

No Transgression Zone (NTZ) - A predefined area of airspace located between the final approach courses of each adjacent pair of parallel runways. This zone is an area in which an aircraft on final approach to its assigned runway should not enter. It is a protective zone for ensuring proper separation of parallel approaching aircraft.

Noise Abatement - Noise Abatement is the historic name of the function that is becoming known as Noise Monitoring.

Noise Monitoring - Port authorities monitor noise around major airports and correlate those reports with aircraft track and flight data received from the FAA. These data enable the port

authority to identify particular aircraft with specific noise incidents. The data are provided via a one-way interface with the terminal automation system. Data collection, recording, filtering, review, and editing are performed within FAA facilities under FAA control. The data are retained by the FAA for a period of 24 to 72 hours, then released to airport authorities.

Non-Controlled Aircraft - Those aircraft not participating in or receiving traffic separation service from the ATC system. This term does not include those flights receiving any kind of control service from control towers.

Non-Discrete Code - A radar beacon Mode 3/A four digit octal code adapted as non-discrete. These are normally codes in which the last two digits are zeros, but in STARS they could be adapted to end in any numbers. Non-discrete codes are normally reserved for radar facilities that are not equipped with discrete coding capability and for other purposes such as emergencies (Alert SPC's), VFR aircraft (1200), etc.

Non-En Route System Messages - Interfacility data messages associated with flight plans that do not originate from the En Route system , formerly called ARSA messages, transferred to an adjacent TRACON via the En Route system where that system acts simply as a message router.

Non-Interactive Position - A non-interactive position represents a work assignment that is documented as a sign-on or sign-off entry but does not serve as an operator of a TCW or TDW. Examples are Ground Control and Clearance Delivery.

Non-Mode C Non-Selected - Target is not reporting Mode C altitude and is not within a beacon code filter selected by a TCP.

Non-Mode C Selected - Target is not reporting Mode C altitude and is within a beacon code filter selected by a TCP.

Non-Radar Separation - Used to refer to parameters, procedures and symbology relating to processing and display of a track based on a positional uncertainty insufficient to support greater than or equal to 5 Nmi ("non-radar") separation procedures (default datablock mnemonic = "TRK").

Normal Operating Zone (NOZ) - An area of airspace around each final approach course centerline that is not part of any NTZ or NEZ.

Notification - Information provided to the operator indicating the occurrence of an event.

Nuisance Alert - An unwarranted alert message warning of a present or predicted, unsafe condition.

Off-line State - The condition where, a system resource, is not configured or not available operationally.

On-line State - The condition where, a system resource, is configured to be operational.

Operational Data - Data obtained while the system is in Normal Service Level Mode.

Operator - Any person who interacts directly with a computer system.

Operator Class - An operator role that contains a grouping of operator functions.

Operator Declared Radar Sensor Failure State - The Air Traffic Control Specialist is given the capability to enable or disable radar sensor inputs when he/she determines that the radar sensor is not behaving correctly.

Or - "Or" is used in this specification as the logical inclusive "or". For a requirement, which refers to x "or" y, x or y or both may be satisfied. In no case does the use of "or" imply that STARS must implement only one part of the requirement.

Overflight - A flight which 1) traverses a given airspace without landing or 2) operates in a given airspace for an extended period of time.

Package - A package comprises a user-defined group of STARS application (FSL, ESL and AIA) buildlists, CAS buildlists, Support (DMS and ToolsMenu) buildlists, and system and site adaptation buildlists (FSL, ESL, AIA and Source Database).

Packet Filtering - A method of evaluating, an external message for access control into the STARS system.

Page Printing Device - A hardware component capable of single pixel addressing and therefore capable of outputting more than standard ASCII text. This allows for multiple fonts and graphics generation.

Parameter - In the context of monitoring, the term refers to a measurable attribute of a resource.

PARROT - A beacon permanent echo from a fixed transponder which "squawks" each time the beacon radar illuminates it.

PARROT Reliability - The number of PARROT target reports received compared to the number of PARROT target reports expected.

Partition - A subset of system resources configured to provide a desired set of functionality while operating concurrently with, and without disruption to, the operation of other system resources.

Password - A character string that may be used to authenticate an identity.

Peak RMS Error - The largest RMS error observed for a specified interval.

Performance Based Navigation - PBN is an advanced, satellite-enabled form of air navigation in the NAS that uses on-board aircraft equipment to create precise 3-D flight paths. PBN primarily consists of RNAV and Required Navigation Performance (RNP).

Performance Verification - The process of verifying, an entire service level, while the system is On-line, by executing an end to end test.

PE Reliability - The number of PE target reports received compared to the number of PE target reports expected.

Permanent-Echo - Radar signals reflected from fixed objects on the earth's surface; e.g., buildings, towers, terrain. Permanent echoes are distinguished from "ground clutter" by being definable locations rather than large areas. Under certain conditions they may be used to check radar alignment.

Pointout - An action taken by a controller to transfer the radar identification of an aircraft to another controller (intrafacility pointout) or to another facility (interfacility pointout) if the aircraft will or may enter the airspace or protected airspace of another controller and radio communications will not be transferred.

Position - 1) A logical entity consisting of the collection of data and information required to perform a set of required functions. A position may be hosted on any capable workstation. Any active position may be associated with one or more input device sets. STARS functionality is allocated to two types of positions, the Terminal Controller Position and the Monitor and Control Position. 2) Location of a target with respect to the origin of a specified coordinate system.

Position Error - The distance between the true aircraft position and the corresponding predicted track position before the latter is updated.

Position Symbol - 1) A computer-generated indication shown on a radar display to indicate the reported position and mode of tracking. 2) A computer-generated indication in the datablock representing a Terminal Controller Position.

Position Deviation - The distance between a targets radar reported position, (time corrected) and the corresponding predicted track position, before the latter is updated.

Precision Runway Monitor (PRM) - The PRM was developed to allow independent approaches to closely spaced parallel runways under instrument meteorological conditions. It consists of a high update rate, monopulse, secondary surveillance radar and a high resolution color display subsystem. The PRM monitors aircraft on final approach to parallel runways and provides controllers visual and aural alerts when the approaching aircraft are predicted to blunder into a no transgression zone between the parallel runways.

Pre-Planned Product Improvement (P3I) - A future modification to the system hardware and/or software, that will provide additional or enhanced, functionality and/or performance.

Preference Set - A profile of desired display attributes consisting of display adjustments and view customizations which are stored and recalled at will by an operator. Preference sets permit the operator to set attributes in advance, to save attributes, to change attributes, and to invoke them as a set. Multiple preference sets can be specified and saved by each operator.

Preventive Maintenance - Routine, scheduled cleaning, adjustment, lubrication, part replacement, etc. required to preserve the equipment and reduce the chance of failure.

Preview Area - A view, or portion of a view, which displays command input during composition and prior to entry by the operator.

Previous Owner - When an interfacility or intrafacility handoff is accepted, the position that owned the track prior to the handoff becomes the previous owner.

Primitive - A basic unit of software code used as a building block to create more complex software.

Radar Coordinates - A coordinate system based on the geographic location of an item in relation to radar(s) or the surveillance coverage area common coordinate system.

Radar Data - When used without qualification, "radar" or "radar data" generally include both primary radar and beacon radar information received by an interrogator site.

Radar Messages - The set of radar data associated with a live or simulated radar return. Radar Message types include Beacon Radar Data, Search Radar Data, Radar System Status, Test, Map, Strobe, and Weather data.

Radar Reinforced Beacon Target Report - A beacon target report merged with its associated search report.

Radar Reinforcement - A percentage of the number of times a beacon target was detected in the same range cell as a search target with overlapping azimuths over the total number of beacon targets.

Radar Scan - The period required for a radar to make one complete revolution.

Range - The distance from a radar to a target.

Range Rings - Concentric circles displayed within a view which indicate the constant, scaled range from the controller selected origin.

Range Scale - The actual distance represented from one vertical edge of the display screen to the other.

Range Splits -

a. Beacon Range Split - Two beacon reports from a single target. Both reports contain the same beacon, occur within the same scan, and are in adjacent range cells (i.e. reported range differ by ± one range lsb), and are separated in azimuth by no more than 30 ACPs.
b. Search Range Split - A search Report detected in an adjacent range cell as a reinforced beacon target with an azimuth separation of no more than ± one azimuth lsb. A search range split also occurs when a beacon only target is detected and two search reports are detected in adjacent range cells (i.e. reported range differ by ± one range lsb), and the azimuth separation is no more than ± one azimuth lsb.

Reconfiguration - Changing the state or interconnection of resources.

Redundant Coding - Usage of multiple coding techniques to encode data. For example, the presentation of information in a view using both color coding and flashing.

Reflection - A reflected beacon reply which is the result of a return path being established between the beacon radar's antenna and the aircraft via a manmade reflecting object. It is distinct from multi-path. Reflected beacon target reports will have range or azimuth errors or both because of the indirect path over which the interrogation and/or reply was obtained. The reflected return is a type of false target. Search radars may also experience reflections, but, because of the two-way propagation loss, they are much more infrequent.

Registration - The spatial alignment of the slant-range beacon radar returns, for the same target, at approximately the same time.

Registration Error - The inconsistencies in the reported target range and azimuth received from several radars interrogating the same target at the same time.

Reliability - The degree, often expressed as MTBF, that a system or component will perform a required function under specific conditions for a specified period of time.

Remote - Communication with STARS indirectly through the use of external interfaces.

Remote Displays - Displays connected via GFE communications to provide access to the STARS automation subsystem.

Remote Maintenance Facilities - The STARS remote maintenance facilities are the nine Operational Support Facilities (OSFs) and the STARS Central Support Complex (SCSC). Each OSF contains an OSF maintenance subsystem. The SCSC contains the SCSC maintenance subsystem. The SCSC maintenance subsystem and one OSF maintenance subsystem interface to a STARS automation subsystem via the automation subsystem's remote maintenance interface.

Remote Maintenance Subsystems - The STARS remote maintenance subsystems are the OSF maintenance subsystem and the SCSC maintenance subsystem. The remote maintenance subsystems are used to perform centralized remote hardware and software maintenance of some or all of the STARS automation subsystems located at operational sites.

Required Navigation Performance - RNP consists of highly accurate approach procedures that enable aircraft equipped with self-monitoring avionics to operate safely near high terrain or in congested airspace. RNP increases the precision of RNAV through computer-based RNAV performance monitoring and alerting aboard the aircraft. This includes flying precise curved paths, giving air traffic controllers more options and enabling them to relieve or eliminate conflicts between approaches to or takeoffs from airports that are located close to each other.

Requirement Validation - The process of confirming, that a STARS system capability is compliant with, the corresponding system specification requirement.

Requirement Verification - The process of confirming that a system requirement is operating correctly.

Resectorization - The reassigning of airspace responsibility to positions.

Resource - A hardware component, software component or external interface.

Resource State - An attribute of a resource, that characterizes its condition. (See On-Line State, Off-Line State, Standby State)

Resource Status – The information, at a particular time, about the location and state of any resource.

Resource Verification - The process of sequentially, applying the On-line diagnostic tests and the background periodic tests so that, all operational resources are verified.

Response Time - The time required to achieve a desired action or output from the system.

Return-To-Normal Condition - The condition where, the value of a monitored parameter, returns to a specified ideal or acceptable range.

Ringaround - A target for which the radar receives many reports due to lack of sidelobe (and backlobe) suppression. Ringaround targets are characterized by many target reports at nearly the same range but at different azimuths.

Rules Adaptation - Adaptation data that is defined via structured text containing adaptation parameters pertaining to data blocks, lists and command input sequences. Rules adaptation is made available to the online application software after being processed by a rules compiler that requires the text to conform to specific syntactic and semantic constraints.

Scalability - The capability to add, delete and adapt hardware and software components to meet the needs of a specific site without change to the system architecture or design. The capability to scale the system configuration will provide a tailored terminal automation system with the capacity, functionality and performance required to provide adequate air traffic control service under a specified air traffic load.

Scan-To-Scan Speed Change Stability - The magnitude of displayed speed change from scan to scan.

Scratch Pad - A data field in the data block that is:

a. Entered by a controller to make special notations concerning an aircraft and
b. Entered automatically by the system to present information such as airport and runway destination for an aircraft after passing an adapted location.

Search Blip/Scan - The ratio between the average number of times all search targets are detected in a scan compared to the maximum number of hits per scan.

Search Radar - That form of radar that depends upon reception of reflected electromagnetic energy for the detection of objects in the area under surveillance. A radar system in which a transmitted pulse is reflected by an object, received and processed.

Search RTQC Reliability - The number of search radar sector mark and RTQC messages received compared to the number of search radar sector mark and RTQC messages expected.

Search Target - A detection that results from the reflection of a radar transmission by an object such as an aircraft.

Search-Only Target - A search target report, that did not merge with a beacon target report.

Sectorization - Change of configuration plan within a terminal area of a TRACON.

Secure Enclave - The area within which the government exercises complete control over security, including personnel, physical equipment access, communication lines, and networks. Typically, this area is within the physical bounds of a FAA/DoD controlled site.

Security Audit Trail - A set of records that collectively provide documented evidence of processing used to aid in tracing from original transactions forward to related records and files, and/or backwards from records to their component source transactions.

Security Functional Testing - The portion of security testing by which, the advertised features, of a system are tested for correct operation.

Security Object - A passive entity, that contains or receives information. Access to an object potentially implies access to the information it contains. Examples of objects are: password files, security audit logs, access control lists, operator permissions, records, segments, files, directories, and programs, processors, video displays, keyboards, printers, network nodes, etc. and Personal Sensitive Data (data falling within the Privacy Act).

Security Policy - The set of laws, rules, and practices that regulate how an organization manages, protects, and distributes sensitive information.

Security Relevant Event - An event, that attempts to change the security state of the system. (e.g., change discretionary access controls, change user password, etc.) Also, an event, that attempts to violate the security policy of the system, (e.g., too many attempts to log in).

Security Subject - An active entity, generally in the form of a person, process, or device, that initiates information flow among objects or changes the system state.

Selected Data - Any one of various types of data that are available within the system, e.g. CDR data, performance data, system analysis data, or problem determination data.

Self-Contained Unit - A unit having within itself, everything necessary, to perform some predefined functionality.

Semantic - Aspects of the design that pertain to displayed objects, object properties, user commands, and CHI-initiated functions.

Sensor Data - Primitive discrete data that is obtained from a monitoring device, such as radar.

Separation Definitions - See Increased Separation, Non-Radar Separation and Terminal Separation.

Serial Input Output - Serial interface hardware contained within a CGW. Each interface supports four Serial Channels.

Service Interruption - Loss of both, Full Service Level (FSL) and Emergency Service Level (ESL).

Service Level - An indication of the functional and performance capability provided concurrently by STARS; Full Service Level and Emergency Service Level are examples of service levels.

Service Volume Identifier - Name of the field in an ADS-B ASTERIX message that contains a System Area Code (SAC) and System Identity Code (SIC). Synonymous with the term Data Source Identifier, and is used to identify the Service Volume or Composite Traffic Volume from which a particular message originated.

Shall - The word "shall" is specifically used whenever a specification expresses a provision that is binding or identifies a characteristic that a system must possess in order to be acceptable to the acquirer.

Sim Instructor User Class - The level of simulator authorization, that allows the user to have access only to, the instructor setup screen.

Sim Pilot User Class - The level of simulator authorization, that allows the user to have access only to, the pilot setup screen.

Sim Training Staff User Class - The level of simulator authorization that allows the user to have access to all of the simulator functions, including the ATSupport 'toolbox'.

Simulation - The process of generating and controlling target report and flight plan data for the purpose of system testing and controller training.

Single Point of Failure - A non-redundant hardware or software component, the failure of which will result in loss of service.

Single Sensor Ground Position Display-Presentation - The presentation of air traffic data based on the transformation of line-of-sight data to the ground plane**.**

Single Sensor Slant Position Display-Presentation - The presentation of air traffic data based on one sensor's line-of-sight data.

Site Adapted Software - A complete, executable software image which has been customized to operate at a specific operational site. Each executable image is built from automation application software, commercially available software (CAS) , system-wide adaptation data and site-specific adaptation data.

Site Support Server - The server within the Site Support Subsystem shown in Figure 1-3.

Site Support Service Level - A STARS capability that provides support functionality for the STARS Operational Site. Support functions include simulations for test, training and verification for both the FS and ES levels.

Slant Range - (1) Measurement of range determine over a line of sight. (2) The actual straight line distance between an aircraft in flight and a ground location (radar, DME). This distance is greater than the geographical surface range because of the altitude of the aircraft.

Special Condition (SPC) – A condition in which an aircraft is transponding a reserved or an adapted beacon code. When an aircraft is transponding a reserved beacon code, it is referred to as an Alert SPC. Reserved beacon codes include 7400 (Lost Link), 7500 (Hijack), 7600 (Radio Failure), and 7700 (Emergency).

Surface Movement Advisor (SMA) - SMA is an airport automation system that shares information among air traffic, the airlines, airports and operations control centers. SMA identifies and recommends departure plans to help minimize congestion and reduce taxi delays. It enhances information sharing and decision making among recipients.

Software Component - A collection of computer programs and data considered as a single object for the purposes of monitoring and control. A software component may be in the on-line, off-line or standby state.

Special Data Block Symbology - Data block is in some way differentiated from other adapted "standard" data blocks. For example, data block may be bolded or data block may blink.

Special Position Indicator - An indicator, that is used in place of a controller position symbol, to denote a special circumstance. For example, an "X"as a position symbol represents an aircraft destined for specific runway.

Speed Accuracy - The difference between the displayed speed and the true speed of an aircraft.

Stabilized Heading - An attribute of a track that maintains heading within tolerance of a reference heading for at least a minimum stabilization time. The heading tolerance and minimum stabilization time will typically be adapted values.

Standby State - The condition whereby, a system resource, is not configured for but, is available for, use operationally.

STARS Installation Data - A set of system files, that comprise a STARS defined group, of Installation data (e.g., Host and other system files).

STARS Installation Data Tape (IDT) - A Data tape generated at the SCSC containing STARS installation Data in a form that is directly loaded onto the Site Support Server or Support Server.

STARS System Archives - A collection of, STARS System Archives, associated to an upgrade of the operating system, CAS and system files for all processor types within the TAS.

STARS System Archives Release Tape - Electronic media containing the collection of STARS System Archives for an upgrade to the operating system, CAS and system files for all processor types within a TAS.

STARS System Image - Is comprised of a STARS System Archive, in addition to STARS application software and adaptation (FSL, ESL, AIA or Support software) as well as STARS Installation Data.

State - See resource state.

Status - See resource status, flight status and flight plan.

Steady-State Track - A track for a non-maneuvering (non-accelerating) aircraft after any transients from track initialization or a prior maneuver have settled out.

Steady-State Track Establishment Time - The number of scans required for transient errors to decrease to steady-state values following completion of a turn.

Stitch-free - A track whose source-data range and azimuth errors are indistinguishable from those of unbiased radars. The errors are deemed to be indistinguishable if the 90-percent confidence intervals of the error means overlap.

Strobe - Radar reports that define an area of interference. The area is defined by start and stop ranges on an azimuth line. The runlength contained in the target report defines the angular extent of the strobe.

Subsystem - Two or more configurations integrated according to an engineering design in which the independent functionalities and performance of each configuration combine to provide a specified or required service.

Subsystem Verification - The process of ensuring that the subsystem (or resources within it), is providing, or is capable of providing, the specified service, to the user at any given time.

Summarization Interval - An interval of time in which the System Workload Data Sampling Interval, Computer Hardware Resource Data Sampling Interval and Traffic Data Sampling Interval data are to be summarized for display.

Surveillance - The service through which a sensor(s) external to an airborne platform determines the position of the platform, either using navigation or airborne compatible equipment (e.g ATCRBS), position information from the aircraft, (dependent surveillance) or without the use of position information from the aircraft or airborne compatible equipment (independent surveillance).

Surveillance Coverage Area - The largest rectangular geographic volume of space for which surveillance processing is required by STARS.

Surveillance Data - The set of radar messages received from a surveillance system.

Surveillance System - A system, that detects and reports the location of aircraft and/or objects.

Switching Adaptation Data - Changing adaptation data and beginning execution with new parameter values.

Switching Automation Application Software - Changing from one version of application software to another and beginning execution.

System - A collection of subsystems integrated according to an engineering design in which the independent functionalities and performance of each subsystem combine to provide a specified or required end-to-end service. The Standard Terminal Automation Replacement System is composed of four subsystems: the automation subsystem, OSF maintenance subsystem and the SCSC subsystem. STARS itself is a subsystem of the National Airspace System (NAS).
System Workload Data Sampling Interval - An interval of time during which track flight plan and radar report measurements are made.

Tailor - To configure CAS for operational use.

Target - 1) Any discrete object which reflects or transmits energy back to the radar equipment. 2) The indication shown on a radar display resulting from a search radar return or a beacon reply.

Target Address - (also known as Aircraft Address)

Target Identification - 1 - 8 characters, defining the identity of an aircraft, (entered by the pilot) and broadcast by the aircraft Mode S transponder or ADS-B equipage.

Target Extent Symbol - An indication displayed at the location of the target symbol and under the controller position symbol which is representative of the uncertainty in the radar reported target position.

Target Report - A message received from an external radar sensor that contains position and other information on an aircraft detected by the sensor. The target report could also represent a false target resulting from imperfect performance of the sensor.

Target Symbol - A computer-generated indication of an aircraft's position resulting from, a search return or a radar beacon reply.

Tentative Delayed Search Track - An initializing search track that has otherwise met the requirements for track establishment but has a target speed below an adaptable minimum or has not traveled a sufficient adaptable distance. The speed and distance criteria are used to minimize the display of nuisance search tracks supported by stationary reflecting objects such as water towers, etc.

Tentative Search Track - A search track in the state of being initialized but not yet established. Search targets associated with a Tentative Search Track are displayed as uncorrelated targets.

Terminal Area - The airspace in which control service or airport traffic control service is provided.

Terminal Controller Position - See "Position".

Terminal Controller Workstation (TCW) - The system workstation used to perform terminal area air traffic control and controller training. A single TCW will consist of a cabinet housing one display and one or more sets of input devices, processors and power supplies. Each STARS will be configured with multiple TCWs.

Terminal Proximity Alert - Tools that can be displayed on the screen to aid in determining horizontal separation between airplanes. A TPA J-Ring or TPA Cone can be displayed for a track. The TPA J-Ring is displayed as a circle whose center point is the track's location. The TPA Cone is displayed as a circular sector (piece of a pie). The origin of the circular sector is at the track's location. The cone is oriented toward the track's direction of flight.

Terminal Radar - A radar with a scan period of less than 5 seconds that can be used to support terminal air traffic operations.

Terminal Radar Approach Control (TRACON) - A terminal air traffic control facility, usually collocated with an air traffic control tower (ATCT), in which the STARS will be installed. Air traffic controllers within the TRACON will use the STARS to provide traffic control services.

Terminal Separation - Used to refer to parameters, procedures and symbology relating to processing and display of a track based on a positional uncertainty sufficient to support greater than or equal to 3 nmi separation procedures.

Test - The method of verification which consists of operation of the system, or part of the system, using instrumentation or other special test equipment to collect data for later analysis.

Test Mode - A simulation mode in which all external inputs are simulated and appear to the system as live data. While in test mode, the system is not accepting live system inputs and is not being used to control live data.

Test Target - A synthetic target generated externally to simulate a primary radar target report.

Time Out - A condition when a system fails to perform a specified function or provide an expected response within a specified amount of time.

Touch Screen - A data input device consisting of a transparent panel mounted across the face of a display that is divided into sections which are sensitive to the application of pressure or heat and provide the programmed or intended electrical response.

Tower Display Workstation (TDW) - The system workstation located in an ATCT capable of hosting the TCP.

Track - The locus of positions grouped over time which defines the path of an aircraft in flight as referenced to a desired coordinate system (e.g., slant range (range, azimuth), geographical or Cartesian (range-x, range-y, range-z)).

Track Ball - A data input device consisting of a ball that rotates freely within its mount and several buttons Rotation of the ball using the palm of the human hand moves a position identifier (cursor) on a display. Activation of the trackball buttons initiates a command input action.

Track Eligibility - A data field in an ASR-9 or ASR-11 search target message. This data field is used to qualify search targets for search track initiation, tentative search track update, and established search track update. Using this data field can help to minimize the number of nuisance search tracks created from radar clutter.

Track Loss - A track is considered lost when there is no correlation of the track with the correct sensor data for 10 consecutive track update periods.

Target Processing Volumes - Adaptable volumes of airspace used in association with the tracking function. Rules for track initiation, track update, and track drop can be modified when targets and

tracks are within these volumes as compared to the rules applicable to the general radar coverage area.

Track Reliability - A measure of track quality under various conditions of aircraft maneuvers.

Track Swap - A situation in which two target reports received from two tracked aircraft in close proximity are incorrectly correlated.

Track Swap Opportunity - A situation in a Government-defined scenario where the aircraft IDs of two targets in close proximity can remain permanently swapped as a result of miscorrelation, after the targets have separated. Each situation is considered as one opportunity.

Track Swap Probability - The number of track swaps which occur divided by the number of track swap opportunities in a Government-defined scenario.

Traffic Data Sampling Interval - An interval of time during which traffic count measurements are made.

Training Mode - A simulation mode providing the capability to generate and control simulated targets. Selected TCWs and TDWs are placed into training mode to generate and control simulated targets, while the system is in an on line operational state.

Transient Accuracy - The peak RMS error observed during a specified interval.

Transponder - The airborne radar beacon receiver/transmitter portion of the Air Traffic Control Radar Beacon System (ATCRBS) which automatically receives radio signals from interrogators on the ground, and selectively replies with a specific reply pulse group only to those interrogations being received on the mode to which it is set to respond.

Transponder Indicators - Situations such as emergency, hijack, radio failure, and ident that indicate to a TCP based on a set of adapted transponder codes (i.e. beacon code 7700 should indicate an emergency situation).

Unassociated Track - A track that does not matched to a flight plan in STARS.

Uncontrolled Aircraft - Those aircrafts not participating in or receiving traffic separation service from the ATC system. This does not include those flights receiving control service from control towers having only visual surveillance to perform control service.

Useable Display Area - The area of a workstation display screen for actual display of information.

Username - A unique identifier used by the UNIX operating system that is associated with a particular operator.

UTC (Coordinated Universal Time) - UTC is the time provided in world-wide time signal broadcasts used in aviation.

Verification - The process of confirming that a system resource is operating correctly.

VFR On Top - An IFR flight plan which allows a pilot desiring to climb through a cloud, haze, smoke, or other meteorological formation to select an altitude or flight level (subject to any ATC restrictions). Upon reaching the selected altitude, the pilot can 1) cancel the IFR flight plan upon reaching VFR weather conditions, or 2) continue with the IFR flight plan while operating in VFR when conditions warrant above, below, between meteorological layers, or in areas where there is no meteorological obscuration.

View - A logical collection of data arranged according to computer human interface formatting guidelines which is presented to an operator via the workstation display. Views present information to the operator in text and/or graphic format.

Visual Flight Rules (VFR) - The set of rules, procedures and practices employed to operate and control aircraft when human visibility exceeds a specified standard. The term "VFR" is also used in the United States to indicate weather conditions that are equal to or greater than minimum VFR requirements.

Warmstart - The transition of system computer resources from any state, through an off-line state and to an on-line state. If the system computer resource starts in an off-line state, it will directly make the transition to an on-line state. A warmstart causes a reload and restart of the application software. A warmstart does not cause a restart and reload of the operating system.

Warning Time - The amount of time between the presentation of the full alert to the TCP, and the time of the conflict.

Weight Class - The weight class categorizes the weight for types of aircraft as per FAAO JO 7110.65. The weight class between different aircraft is used to determine the separation needed between the aircraft. Current weight classes are Small, Large, B757 non-heavy, Heavy and Jumbo.

Workstation - An integrated set of hardware and software components; including one or more data entry devices, processors, displays, power sources, and equipment cabinets; which is used by an operator to accomplish air traffic control, system maintenance, monitoring and control, or training.

Zero Code - The percentage of beacon messages received with a Valid 3A of zero.

6.3 Traceability Matrix

The traceability matrix below establishes requirement dependencies between the STARS SSD and STARS fPRD. Current SSD traces are tied to STARS fPRD Rev. 4.0.

Table Legend:

- **SSD Section** – The section header of the SSD requirement denoted by a combination of numbers. This field in combination with the 'Req. #' field provide the unique identifier for a given SSD requirement.
- **Req. #** - The "shall" number of the SSD requirement which denotes the particular location of the requirement with respect to other SSD requirements under the same section. This field in combination with the 'SSD Section' field provide the unique identifier for a given SSD requirement.
- **fPRD Section** – The section header of the fPRD requirement denoted by a combination of numbers.
- **fPRD Requirement Text** – The fPRD requirement text of the traced fPRD requirements for a given SSD requirement. Each individual fPRD requirements is denoted with the term "must" followed by a unique ID (e.g. STARS-111).

Notes:

- The "(Derived)" language denotes a gap between the SSD and fPRD. These gaps will be resolved through subsequent requirement updates

SSD Rev F VRTM:

SSD Section	Req. #	SSD Unique ID	SSD Requirement Text	fPRD Section	fPRD Requirement Text
3.1.1.1.1	1	STARS-SSD-00001	Except for non-concurrent redundant elements, major automation equipment (workstations, data processors, gateways, etc.) and individual service levels within each operational site shall[STARS-SSD-00001] be switchable to the On-Line or Off-Line resource state.	3.3.1 3.3.2	3.3.1.1 The system Mean Time to Repair (MTTR) must [STARS-311] be 0.5 hours. 3.3.2.1 The system design must [STARS-321] preclude single point failures, excluding TCWs, MCWs, and TDWs. 3.3.2.2 Full Service availability must [STARS-322] be no less than .999995. 3.3.2.3 Emergency Full Service availability must [STARS-323] be no less than .999995.

3.1.1.1.1	2	STARS-SSD-00002	Any Automation Subsystem element (equipment and corresponding software) that is redundant to improve availability but cannot operate concurrently with the corresponding On-Line element shall[STARS-SSD-00002] be switchable to either On-Line, Off-Line, or Standby resource.	3.3.1 3.3.2	3.3.1.1 The system Mean Time to Repair (MTTR) must [STARS-311] be 0.5 hours. 3.3.2.1 The system design must [STARS-321] preclude single point failures, excluding TCWs, MCWs, and TDWs. 3.3.2.2 Full Service availability must [STARS-322] be no less than .999995. 3.3.2.3 Emergency Full Service availability must [STARS-323] be no less than .999995.
3.1.1.1.2.1	1	STARS-SSD-00003	Recovery from a power failure shall[STARS-SSD-00003] be automatic once power is restored.	3.2.2	3.2.2.3 The system must [STARS-223] recover from power failure to the same operational state as before the failure.
3.1.1.1.2.2	1	STARS-SSD-00004	Reconfiguration of a resource from Standby to On-line shall[STARS-SSD-00004] be automatic upon failure of the corresponding On-line resource.	3.2.2	3.2.2.3 The system must [STARS-223] recover from power failure to the same operational state as before the failure.
3.1.1.2.1	1	STARS-SSD-00005	Among the FSL, EFSL or ESL service levels (specified below); for each service level that is in its On-Line resource state, the Automation Subsystem shall[STARS-SSD-00005] concurrently provide the ATC Operational and System Operational functionality and performance (FSL, EFSL and ESL) required while maintaining the resource reserves described in Computer Resources (3.10).	3.2.1	3.2.1.1 Full Service: All operational functionality and capacity must [STARS-211] be available at each local and remote TCP. 3.2.1.2 Emergency Full Service: All operational functionality and capacity must [STARS-212] be available at each local and remote TCP.
3.1.1.2.1	2	STARS-SSD-00006	The Operational Site Support Subsystem and Automation Subsystem shall[2] operate concurrently.	3.2.1	3.2.1.1 Full Service: All operational functionality and capacity must [STARS-211] be available at each local and remote TCP. 3.2.1.2 Emergency Full Service: All operational functionality and capacity must [STARS-212] be available at each local and remote TCP.
3.1.1.2.2	1	STARS-SSD-00007	Each FSL partition in the Automation Subsystem shall[1] accommodate FSL functionality while using live and simulated (from SSSL below) system inputs when in the On-Line resource state and simulated (from SSSL) system inputs when in the Off-Line resource state.	3.2.1	3.2.1.1 Full Service: All operational functionality and capacity must [STARS-211] be available at each local and remote TCP.

3.1.1.2.2	2	STARS-SSD-00008	The Automation Subsystem shall[2] accommodate separate instances of FSL software in two partitions: PRTA and PRTB.	3.3.2	3.3.2.1 The system design must [STARS-321] preclude single point failures, excluding TCWs, MCWs, and TDWs.
3.1.1.2.2	3	STARS-SSD-00009	The Automation Subsystem shall[3] provide initiation of separate instances of STARS FSL automation subsystem software in PRTA and PRTB.	3.3.2	3.3.2.1 The system design must [STARS-321] preclude single point failures, excluding TCWs, MCWs, and TDWs.
3.1.1.2.2	4	STARS-SSD-00010	The Automation Subsystem shall[4] accommodate FSL resources ranging from the minimum to all, within partition PRTA, with the remaining FSL resources allocated to PRTB.	3.3.2	3.3.2.1 The system design must [STARS-321] preclude single point failures, excluding TCWs, MCWs, and TDWs.
3.1.1.2.2	5	STARS-SSD-00011	MCP input shall[5] select those FSL resources to be assigned to PRTA, with a default of "all".	3.1.9	3.1.9.6 The system must [STARS-116] allow for the control of global system information.
3.1.1.2.3	1	STARS-SSD-00012	The Automation Subsystem shall[1] accommodate ESL functionality, using live and simulated (from SSSL below) system inputs, when ESL is in the On-Line resource state.	3.2.1	3.2.1.2 Emergency Full Service: All operational functionality and capacity must [STARS-212] be available at each local and remote TCP.
3.1.1.2.3	2	STARS-SSD-00013	The Automation Subsystem shall[2] accommodate ESL functionality using simulated (from SSSL) system inputs when ESL is in the Off-Line resource state.	3.2.1	3.2.1.2 Emergency Full Service: All operational functionality and capacity must [STARS-212] be available at each local and remote TCP.
3.1.1.2.4	1	STARS-SSD-00014	EFSL shall[1] operate independently of FSL but function exactly like FSL unless specifically noted.	3.2.1	3.2.1.2 Emergency Full Service: All operational functionality and capacity must [STARS-212] be available at each local and remote TCP.
3.1.1.2.5	1	STARS-SSD-00015	The Operational Site Support Subsystem shall[1] support SSSL, creating simulated system inputs from scenario generation tools for performance verification, test or training use by FSL or ESL in the Automation Subsystem.	3.2.1	3.2.1.3 Independent Access: Each TCP must [STARS-213] have independent access to Full and Emergency Full Service levels.
3.1.1.2.6	1	STARS-SSD-00016	ESL, FSL, and EFSL shall[1] be implemented independently such that the software or adaptation of one service level can be switched without affecting operation of the alternate service level.	3.2.1	3.2.1.3 Independent Access: Each TCP must [STARS-213] have independent access to Full and Emergency Full Service levels.
3.1.1.2.7.1	1	STARS-SSD-00017	Settings shall[1] be transferred from FSL to ESL no less frequently than each 20 seconds.	3.2.1	3.2.1.3 Independent Access: Each TCP must [STARS-213] have independent access to Full and Emergency Full Service levels.
3.1.1.2.7.1	2	STARS-SSD-00018	Transferred settings shall[2] be applied to ESL at the TCW/TDW if all the following conditions are met: a. TCW/TDW is displaying FSL b. TCW/TDW is not in Performance Verification Mode. c. FSL and ESL are in the same service level mode.	3.2.1	3.2.1.3 Independent Access: Each TCP must [STARS-213] have independent access to Full and Emergency Full Service levels.

3.1.1.2.7.1	3	STARS-SSD-00019	Display Control Settings shall[3] be preserved and used when switching from FSL to ESL.	3.2.1	3.2.1.3 Independent Access: Each TCP must [STARS-213] have independent access to Full and Emergency Full Service levels.
3.1.1.2.7.1	4	STARS-SSD-00020	A list containing up to 80 pairs of Aircraft Identification (ACID) and assigned discrete beacon code for active tracks (associated and disassociated) and pending flight plans owned at that TCW/TDW shall[4] be transferred from FSL to ESL.	3.2.1	3.2.1.3 Independent Access: Each TCP must [STARS-213] have independent access to Full and Emergency Full Service levels.
3.1.1.2.7.1	5	STARS-SSD-00021	The ACID/beacon code list shall[5] be transferred from FSL to ESL no less frequently than every 20 seconds.	3.2.1	3.2.1.3 Independent Access: Each TCP must [STARS-213] have independent access to Full and Emergency Full Service levels.
3.1.1.2.7.1	6	STARS-SSD-00022	The transferred ACID/beacon code list shall[6] be applied to ESL at the TCW/TDW if the same conditions as shall [2] above are met.	3.2.1	3.2.1.3 Independent Access: Each TCP must [STARS-213] have independent access to Full and Emergency Full Service levels.
3.1.1.2.7.1	7	STARS-SSD-00023	The Current System Altimeter setting shall[7] be the latest valid setting from the altimeter reporting station adapted as the system altimeter for the TCP.	3.2.1	3.2.1.3 Independent Access: Each TCP must [STARS-213] have independent access to Full and Emergency Full Service levels.
3.1.1.2.7.2	1	STARS-SSD-00024	Display settings and the ACID/Beacon Code list shall[1] be transferred from FSL to EFSL no less frequently than each 10 seconds.	3.2.1	3.2.1.3 Independent Access: Each TCP must [STARS-213] have independent access to Full and Emergency Full Service levels.
3.1.1.2.7.2	2	STARS-SSD-00025	Transferred display settings and ACID/Beacon Code data shall[2] be applied to EFSL when eligible.	3.2.1	3.2.1.3 Independent Access: Each TCP must [STARS-213] have independent access to Full and Emergency Full Service levels.
3.1.1.2.7.2	3	STARS-SSD-00026	Display Control Settings shall[3] be preserved and used when switching from FSL to EFSL.	3.2.1	3.2.1.3 Independent Access: Each TCP must [STARS-213] have independent access to Full and Emergency Full Service levels.
3.1.1.2.7.2	4	STARS-SSD-00027	A list containing up to 160 pairs of ACID and assigned discrete beacon code for active tracks and pending flight plans owned at that TCP shall[4] be transferred from FSL to EFSL	3.2.1	3.2.1.3 Independent Access: Each TCP must [STARS-213] have independent access to Full and Emergency Full Service levels.
3.1.1.2.7.2	7	STARS-SSD-00028	The Current System Altimeter setting shall[7] be the latest valid setting from the altimeter reporting station adapted as the system altimeter for the TCP.	3.1.2	3.1.2.6 The system must [STARS-016] provide for automatic entry of Altimeter data for the calculation of aircraft altitude information.

3.1.1.2.7.2	8	STARS-SSD-00029	Upon switchover at a TCP from FSL to EFSL, owned flight plans at that position from FSL shall[8]be created on EFSL as follows: a. As local flight plans, with flight data from the last transfer interval b. As unsupported or frozen data blocks if not updated by surveillance source c. As frozen data blocks if beacon codes are non-discrete or primary only d. As frozen data blocks if in some state of coast and with an alert condition e. TSAS data for individual flights will not be synchronized between FSL and EFSL.	3.2.1	3.2.1.3 Independent Access: Each TCP must [STARS-213] have independent access to Full and Emergency Full Service levels.
3.1.1.3.1	1	STARS-SSD-00030	A TCW in FS Workstation Mode shall[1] independently allow selection of FMA mode in which the specified FMA functions are available.	3.1.4	3.1.4.6 The system must [STARS-056] enable and disable FMA processing via manual entry.
3.1.1.3.1	2	STARS-SSD-00031	Each TCP shall[2] independently allow selection of a FS mode in which the workstation functions in concert with PRTA or PRTB functions throughout the remainder of the Automation Subsystem and with SSSL functions in the Operational Site Support Subsystem.	3.3.2	3.3.2.2 Full Service availability must [STARS-322] be no less than .999995.
3.1.1.3.2	1	STARS-SSD-00032	Each TCP shall[1] independently allow selection of a ES mode in which the workstation functions in concert with ESL functions throughout the remainder of the Automation Subsystem and with SSSL functions in the Operational Site Support Subsystem.	3.2.1	3.2.1.3 Independent Access: Each TCP must [STARS-213] have independent access to Full and Emer-gency Full Service levels.
3.1.1.3.3	1	STARS-SSD-00033	Each TCP shall[1] independently allow selection of a FS Training mode in which the workstation functions in concert with FSL functions handling training data throughout the remainder of the Automation Subsystem and with SSSL functions in the Operational Site Support Subsystem.	3.2.1	3.2.1.1 Full Service: All operational functionality and capacity must [STARS-211] be available at each local and remote TCP.
3.1.1.3.3	2	STARS-SSD-00034	A TCW in FS Training Workstation Mode shall[2] independently allow selection of an FMA mode in which the specified FMA functions handling training data are available.	3.1.10	3.1.10.21 Each TCW must [STARS-151] have selectable presentation modes.
3.1.1.3.3	3	STARS-SSD-00035	A TCP in FS Training Workstation Mode shall[3] independently allow TCP-specific ATPA commands to be entered.	3.2.1	3.2.1.1 Full Service: All operational functionality and capacity must [STARS-211] be available at each local and remote TCP.

3.1.1.3.4	1	STARS-SSD-00036	Each TCP shall[1] independently allow selection of a ES Training mode in which the workstation functions in concert with ESL functions handling training data throughout the remainder of the Automation Subsystem and with SSSL functions in the Operational Site Support Subsystem.	3.2.1	3.2.1.2 Emergency Full Service: All operational functionality and capacity must [STARS-212] be available at each local and remote TCP.
3.1.1.3.5	1	STARS-SSD-00037	The FS MCP shall[1] display the results of PV testing.	3.1.10	3.1.10.2 The system must [STARS-132], based upon adaptation, display general information for the facility at each TCP.
3.1.1.3.5	2	STARS-SSD-00038	Any specified TCP shall[2] support a FS PV mode in which the workstation provides data for evaluation of performance verification.	3.2.1	3.2.1.1 Full Service: All operational functionality and capacity must [STARS-211] be available at each local and remote TCP.
3.1.1.3.5	3	STARS-SSD-00039	FS MCP input shall[3] specify the TCP to be switched to FS PV mode.	3.1.9	3.1.9.5 The system must [STARS-115] provide a controller with the ability to manipulate the presentation of information on an individual situation display.
3.1.1.3.5	4	STARS-SSD-00040	A TCW in FS Performance Verification Workstation Mode shall[4] independently allow selection of an FMA mode in which the specified FMA functions handling performance verification data are available.	3.1.10	3.1.10.21 Each TCW must [STARS-151] have selectable presentation modes.
3.1.1.3.5	5	STARS-SSD-00041	A TCP in FS Performance Verification Workstation Mode shall[5] independently allow TCP-specific ATPA commands to be entered.	3.2.1	3.2.1.1 Full Service: All operational functionality and capacity must [STARS-211] be available at each local and remote TCP.
3.1.1.3.6	1	STARS-SSD-00042	Any specified TCW or TDW shall[1] support an ES Performance Verification mode in which the workstation provides data for evaluation of performance verification.	3.2.1	3.2.1.2 Emergency Full Service: All operational functionality and capacity must [STARS-212] be available at each local and remote TCP.
3.1.1.3.6	2	STARS-SSD-00043	ESL MCP input shall[2] specify the TCW or TDW to be switched to ES Performance Verification mode.	3.1.9	3.1.9.5 The system must [STARS-115] provide a controller with the ability to manipulate the presentation of information on an individual situation display.
3.1.1.3.6	3	STARS-SSD-00044	The ESL MCP shall[3] display the results of Performance Verification testing.	3.1.10	3.1.10.2 The system must [STARS-132], based upon adaptation, display general information for the facility at each TCP.
3.1.1.3.7	1	STARS-SSD-00045	Each TCP shall[1] independently allow selection of a MCP mode in which the workstation provides MCP functionality	3.2.1	3.2.1.1 Full Service: All operational functionality and capacity must [STARS-211] be available at each local and remote TCP. 3.2.1.2 Emergency Full Service: All operational functionality and capacity must [STARS-212] be available at each local and remote TCP.

3.1.1.3.7	2	STARS-SSD-00046	When MCP input at a TCP in MCP mode switches it to a TCP mode, the associated TCP display shall[2] automatically appear with no additional operator action.	3.2.1	3.2.1.1 Full Service: All operational functionality and capacity must [STARS-211] be available at each local and remote TCP. 3.2.1.2 Emergency Full Service: All operational functionality and capacity must [STARS-212] be available at each local and remote TCP.
3.1.1.3.8	1	STARS-SSD-00047	Any workstation shall[1] support multiple MCPs.	3.1.10	3.1.10.3 The system must [STARS-133] based upon adaptation, display the general status of the system at each TCP.
3.1.1.3.9	1	STARS-SSD-00048	In the Normal mode, FSL and/or ESL shall[1] receive live inputs and simulated inputs and be in the On-Line resource state.	3.2.1	3.2.1.1 Full Service: All operational functionality and capacity must [STARS-211] be available at each local and remote TCP.
3.1.1.3.9	2	STARS-SSD-00049	In the Test mode, FSL and/or ESL shall[2] receive only simulated inputs and be in the Off-line resource state.	3.2.1	3.2.1.1 Full Service: All operational functionality and capacity must [STARS-211] be available at each local and remote TCP.
3.1.1.3.9	3	STARS-SSD-00050	The FSL and ESL MCP shall[3] indicate when the corresponding service level is in test mode.	3.2.1	3.2.1.1 Full Service: All operational functionality and capacity must [STARS-211] be available at each local and remote TCP.
3.1.1.3.10	1	STARS-SSD-00051	A TCP shall[1] independently allow selection of DSA mode in which the functionality specific to DSA will be available.	3.1.10	3.1.10.21 Each TCW must [STARS-151] have selectable presentation modes.
3.1.1.3.10	2	STARS-SSD-00052	Up to 160 pairs of ACID and assigned discrete beacon codes for active tracks (associated and disassociated) and pending flight plans owned at that TCW/LTDW shall[2] be available for DSA mode.	3.1.1 3.1.7 3.3.2	3.1.1.3 The system must [STARS-003] process secondary inputs from the FAA and DoD air traffic surveillance systems. 3.1.7.2 The system must [STARS-082] process Arrival, Departure, and Overflight Flight Plans generated internally by an adjacent Terminal facility. 3.1.7.3 The system must [STARS-083] process Arrival, Departure, and Overflight Flight Plans generated internally by an ARTCC.
3.1.1.3.10.1	1	STARS-SSD-00053	In DSA mode weather data shall[1] be accepted simultaneously from multiple surveillance systems.	3.1.1	3.1.1.4 The system must [STARS-004] display digital weather inputs from FAA and DoD air traffic surveillance systems, when available.
3.1.1.3.10.1	2	STARS-SSD-00054	In DSA mode weather data shall[2] be made available for display.	3.1.1	3.1.1.4 The system must [STARS-004] display digital weather inputs from FAA and DoD air traffic surveillance systems, when available.

3.1.1.3.10.2	1	STARS-SSD-00055	In DSA mode input altimeter settings for each altimeter reporting station shall[1] be obtained from TCP input.	3.1.2	3.1.2.7 The system must [STARS-017] provide for manual override entry of Altimeter data for the calculation of aircraft altitude information.
3.1.1.3.10.2	2	STARS-SSD-00056	In DSA mode the current altimeter setting for each altimeter reporting station shall[2] be the most recent valid input altimeter setting.	3.1.2	3.1.2.7 The system must [STARS-017] provide for manual override entry of Altimeter data for the calculation of aircraft altitude information.
3.1.1.3.11	1	STARS-SSD-00057	A remote TCP shall[1] independently allow selection of DSF mode in which the functionality specific to the DSF capability (if adapted) will become available.	3.1.1	3.1.1.1 The system must [STARS-001] accept aircraft position and weather data simultaneously from multiple surveillance systems within geographic areas defined by site adaptable (SA) parameters.
3.2.1.1.1.1	1	STARS-SSD-00058	Aircraft position, weather, test, and status data shall[1] be accepted simultaneously from multiple surveillance systems.	3.1.1	3.1.1.1 The system must [STARS-001] accept aircraft position and weather data simultaneously from multiple surveillance systems within geographic areas defined by site adaptable (SA) parameters.
3.2.1.1.1.2	1	STARS-SSD-00059	Surveillance data shall[1] be accepted by both a primary interface and an identical backup automation system interface.	3.3.2	3.3.2.1 The system design must [STARS-321] preclude single point failures, excluding TCWs, MCWs, and TDWs.
3.2.1.1.1.3	1	STARS-SSD-00060	Data shall[1] be automatically selected from either the primary interface or the identical backup interface for each surveillance system.	3.1.1	3.1.1.1 The system must [STARS-001] accept aircraft position and weather data simultaneously from multiple surveillance systems within geographic areas defined by site adaptable (SA) parameters.
3.2.1.1.1.4	1	STARS-SSD-00061	Beacon and search target data shall[1] be accepted.	3.1.1	3.1.1.1 The system must [STARS-001] accept aircraft position and weather data simultaneously from multiple surveillance systems within geographic areas defined by site adaptable (SA) parameters.
3.2.1.1.1.4	2	STARS-SSD-00062	Multilateration target reports from Mode S, ATCRBS, and ADS-B equipped aircraft shall[2] be received via the ASDE-X to STARS interface.	3.1.1	3.1.1.1 The system must [STARS-001] accept aircraft position and weather data simultaneously from multiple surveillance systems within geographic areas defined by site adaptable (SA) parameters.
3.2.1.1.1.4	3	STARS-SSD-00063	Automatic Dependent Surveillance - Broadcast (ADS-B) target reports shall[3] be received from the Surveillance Broadcast Service (SBS) Service Delivery Point (SDP) to STARS interface.	3.1.1	3.1.1.1 The system must [STARS-001] accept aircraft position and weather data simultaneously from multiple surveillance systems within geographic areas defined by site adaptable (SA) parameters.
3.2.1.1.1.4	4	STARS-SSD-00064	The system shall[4] use a single instance of the data items in identical ADS-B reports received from multiple ADS-B Radio Stations for a given target.	3.1.1	3.1.1.5 The system must [STARS-005] process ADS-B from the Surveillance Broadcast System (SBS).
3.2.1.1.1.4	5	STARS-SSD-00065	ADS-B target reports that are not test targets with Latitude/Longitude falling outside of an adapted overall area of interest shall[5] be eliminated from further processing by the STARS automation subsystem.	3.1.1	3.1.1.5 The system must [STARS-005] process ADS-B from the Surveillance Broadcast System (SBS).

3.2.1.1.1.4	6	STARS-SSD-00066	Wide Area Multilateration (WAM) target reports shall[6] be received from the Surveillance and Broadcast Services (SBS) Service Delivery Point (SDP) to STARS interface.	3.1.1	3.1.1.5 The system must [STARS-005] process ADS-B from the Surveillance Broadcast System (SBS).
3.2.1.1.1.5	1	STARS-SSD-00067	Registration error correction factors shall[1] be applied to beacon and search targets.	3.1.1	3.1.1.2 The system must [STARS-002] process digital primary inputs from the FAA and DoD air traffic surveillance systems, if available. 3.1.1.3 The system must [STARS-003] process secondary inputs from the FAA and DoD air traffic surveillance systems.
3.2.1.1.1.6	1	STARS-SSD-00068	Collimation error correction factors shall[1] be applied to search targets.	3.1.1	3.1.1.2 The system must [STARS-002] process digital primary inputs from the FAA and DoD air traffic surveillance systems, if available.
3.2.1.1.1.7	1	STARS-SSD-00069	Targets that lie outside of a geographic area defined by adaptable parameters shall[1] be discarded.	3.1.2	3.1.2.1 The system must [STARS-011] automatically track all primary surveillance targets within a geographic area defined by SA parameters. 3.1.2.2 The system must [STARS-012] automatically track all secondary surveillance targets within a geographic area defined by SA parameters.
3.2.1.1.1.7	2	STARS-SSD-00070	If no valid target altitude exists, the system shall[2] use an adaptable parameter to determine whether the target satisfies the altitude eligibility criteria for the individual target filtering area.	3.1.2	3.1.2.4 The system must [STARS-014] perform altitude tracking, using target reports from both single and multisensory surveillance systems.
3.2.1.1.1.7	4	STARS-SSD-00071	If a sensor is in the declared failure state, search and beacon target messages from that sensor shall[4] only be displayed in the TCP single sensor ground position, slant position, and slant position PAM display views, and filtered to prevent their use in ATC tracking.	3.1.1	3.1.1.2 The system must [STARS-002] process digital primary inputs from the FAA and DoD air traffic surveillance systems, if available. 3.1.1.3 The system must [STARS-003] process secondary inputs from the FAA and DoD air traffic surveillance systems.
3.2.1.1.1.7.1	1	STARS-SSD-00072	ADS-B target reports shall[1] be discarded based on FSPEC, Report Version or Data Source Identifier not matching adaptation.	3.1.1	3.1.1.5 The system must [STARS-005] process ADS-B from the Surveillance Broadcast System (SBS).
3.2.1.1.1.7.1	4	STARS-SSD-00073	ADS-B target reports that are not test targets shall[4] be discarded based on Link Technology if the link version is unknown, or not adapted, or the report is not based on ADS-B.	3.1.1	3.1.1.5 The system must [STARS-005] process ADS-B from the Surveillance Broadcast System (SBS).

3.2.1.1.1.7.1	5	STARS-SSD-00074	ADS-B target reports that are not test targets shall[5] be filtered based on adaptation parameters for Time of Applicability (TOAp and TOAv) and Time of Message Reception (TOMR).	3.1.1	3.1.1.5 The system must [STARS-005] process ADS-B from the Surveillance Broadcast System (SBS).
3.2.1.1.1.7.1	6	STARS-SSD-00075	ADS-B target reports shall[6] be discarded based on the following Target Address: a. Address Qualifier other than: 1. ADS-B target with ICAO 24-bit address 2. ADS-B target with self-assigned temporary address 3. Fixed Beacon b. ADS-B Report with an "all zero" address	3.1.1	3.1.1.5 The system must [STARS-005] process ADS-B from the Surveillance Broadcast System (SBS).
3.2.1.1.1.7.1	7	STARS-SSD-00076	ADS-B target reports that are not test targets shall[7] be discarded based on the Integrity and Accuracy Parameters defined in adaptation.	3.1.1	3.1.1.5 The system must [STARS-005] process ADS-B from the Surveillance Broadcast System (SBS).
3.2.1.1.1.7.1	8	STARS-SSD-00077	ADS-B target reports that are not test targets shall[8] be discarded based on the Latitude and Longitude validity and the adapted area of interest.	3.1.1	3.1.1.1 The system must [STARS-001] accept aircraft position and weather data simultaneously from multiple surveillance systems within geographic areas defined by site adaptable (SA) parameters. 3.1.1.5 The system must [STARS-005] process ADS-B from the Surveillance Broadcast System (SBS).
3.2.1.1.1.7.1	9	STARS-SSD-00078	ADS-B target reports shall[9] be discarded based on the Data Source Qualifier not being in the adapted set.	3.1.1	3.1.1.5 The system must [STARS-005] process ADS-B from the Surveillance Broadcast System (SBS).
3.2.1.1.1.7.1	10	STARS-SSD-00079	ADS-B target reports that are not test targets shall[10] be discarded based on the ADS-B Data Quality Parameter if all of the following conditions are true: a. "Unknown Link Version #" flag is not set, and Link Version # is greater than 1. b. Duplicate Address flag is not set. c. Reported SDA value is less than what the adaptation specifies.	3.1.1	3.1.1.5 The system must [STARS-005] process ADS-B from the Surveillance Broadcast System (SBS).
3.2.1.1.1.8	1	STARS-SSD-00080	Target data from multiple surveillance systems shall[1] be converted to a common coordinate system.	3.1.1	3.1.1.2 The system must [STARS-002] process digital primary inputs from the FAA and DoD air traffic surveillance systems, if available. 3.1.1.3 The system must [STARS-003] process secondary inputs from the FAA and DoD air traffic surveillance systems.

3.2.1.1.1.9	1	STARS-SSD-00081	Validated Mode C altitude in beacon target reports below a transition altitude shall[1] be corrected for barometric variations from the standard mean sea level pressure of 29.92 inches of mercury.	3.1.2	3.1.2.4 The system must [STARS-014] perform altitude tracking, using target reports from both single and multisensory surveillance systems.
3.2.1.1.1.9	2	STARS-SSD-00082	If use of the transition altitude table is adapted, the transition altitude shall[2] be determined using an adaptable reference transition altitude, the altimeter setting, and the following: <Related Table>	3.1.2	3.1.2.4 The system must [STARS-014] perform altitude tracking, using target reports from both single and multisensory surveillance systems.
3.2.1.1.1.9	3	STARS-SSD-00083	If use of the transition altitude formula is adapted, the transition altitude (At) in units of 100 feet shall[3] be calculated using an adaptable reference transition altitude (Aref), the altimeter setting, DB = [(29.92) - (Altimeter setting)] and the formula: At = Aref + Round [DB*(9.25+0.13*DB)]	3.1.2	3.1.2.4 The system must [STARS-014] perform altitude tracking, using target reports from both single and multisensory surveillance systems.
3.2.1.1.1.9	4	STARS-SSD-00084	For determination of inclusion of the target within geographic volumes and MSAW, the corrected altitude (A) in units of 2 feet, shall[4] be calculated using the smoothed altitude (As) and the formula: A = As – Round [50*DB*(9.25+0.13*DB)]	3.1.2	3.1.2.4 The system must [STARS-014] perform altitude tracking, using target reports from both single and multisensory surveillance systems.
3.2.1.1.1.9	5	STARS-SSD-00085	For all uses of Validated Mode C altitude except determination of inclusion of the target within geographic volumes and MSAW, the corrected altitude (A) in units of 100 feet shall[5] be calculated using the received altitude (Ar) and the formula: A = Ar – Round [DB*(9.25+0.13*DB)]	3.1.2	3.1.2.4 The system must [STARS-014] perform altitude tracking, using target reports from both single and multisensory surveillance systems.
3.2.1.1.1.10	1	STARS-SSD-00086	The adapted surveillance/altimeter tiles shall[1] include one to three adapted altimeter reporting stations.	3.1.2	3.1.2.6 The system must [STARS-016] provide for automatic entry of Altimeter data for the calculation of aircraft altitude information.
3.2.1.1.1.10	2	STARS-SSD-00087	Source data for pressure corrections shall[2] be the current altimeter setting for the surveillance/altimeter tile in which the target report is currently located.	3.1.2	3.1.2.6 The system must [STARS-016] provide for automatic entry of Altimeter data for the calculation of aircraft altitude information.
3.2.1.1.1.10	3	STARS-SSD-00088	Altimeter settings for each altimeter reporting station shall[3] be obtained in accordance with the TCP-selected altimeter setting method associated with that station as Automatic input, via the ABPE Interface or manual, via TCP Entry or Estimation.	3.1.2	3.1.2.6 The system must [STARS-016] provide for automatic entry of Altimeter data for the calculation of aircraft altitude information.

3.2.1.1.1.10	4	STARS-SSD-00089	Current altimeter settings for each altimeter reporting station shall[4] be the most-recent valid input altimeter settings.	3.1.2	3.1.2.6 The system must [STARS-016] provide for automatic entry of Altimeter data for the calculation of aircraft altitude information.
3.2.1.1.1.10	5	STARS-SSD-00090	If reports from an ABPE data stream are missing after an adaptable time-out, the last valid value shall[5] be used.	3.1.2	3.1.2.6 The system must [STARS-016] provide for automatic entry of Altimeter data for the calculation of aircraft altitude information.
3.2.1.1.1.10	6	STARS-SSD-00091	The current altimeter setting for each surveillance/altimeter tile shall[6] be the arithmetic average of the current altimeter settings from each of the (one to three) altimeter reporting stations.	3.1.2	3.1.2.6 The system must [STARS-016] provide for automatic entry of Altimeter data for the calculation of aircraft altitude information.
3.2.1.1.1.11	1	STARS-SSD-00092	Permanent echo search targets shall[1] be detected and made available for display.	3.1.2	3.1.2.1 The system must [STARS-011] automatically track all primary surveillance targets within a geographic area defined by SA parameters.
3.2.1.1.1.12	1	STARS-SSD-00093	Fixed beacon transponder targets shall[1] be detected and made available for display.	3.1.2 3.1.10	3.1.2.2 The system must [STARS-012] automatically track all secondary surveillance targets within a geographic area defined by SA parameters. 3.1.10.7 The system must [STARS-137] display a target indicator at the position of each surveillance target received in single sensor mode. 3.1.10.8 The system must [STARS-138] display a target indicator at the composite position of each surveillance target received in multi-sensor and Fusion modes.
3.2.1.1.1.12	2	STARS-SSD-00094	Reference Transmitter target reports supplied by multilateration sensors shall[2] be made available for display.	3.1.2 3.1.10	3.1.2.2 The system must [STARS-012] automatically track all secondary surveillance targets within a geographic area defined by SA parameters. 3.1.10.7 The system must [STARS-137] display a target indicator at the position of each surveillance target received in single sensor mode. 3.1.10.8 The system must [STARS-138] display a target indicator at the composite position of each surveillance target received in multi-sensor and Fusion modes.

3.2.1.1.1.13	1	STARS-SSD-00095	Test targets from surveillance systems shall[1] be made available for display.	3.1.10	3.1.10.7 The system must [STARS-137] display a target indicator at the position of each surveillance target received in single sensor mode. 3.1.10.8 The system must [STARS-138] display a target indicator at the composite position of each surveillance target received in multi-sensor and Fusion modes.
3.2.1.1.1.13	2	STARS-SSD-00096	An ADS-B target report shall[2] be processed as a test target if either of the following conditions is true: a. Address Qualifier in the Target Address field indicates “Fixed Beacon”. b. Address Qualifier in the Target Address field indicates “Self-Assigned Temporary Address” and the target address matches an adapted target address for the radio station from which the target report originated.	3.1.1	3.1.1.5 The system must [STARS-005] process ADS-B from the Surveillance Broadcast System (SBS).
3.2.1.1.1.14	1	STARS-SSD-00097	False beacon targets due to main beam reflections from known reflecting surfaces shall[1] be detected and suppressed, irrespective of adapted airport mask volumes.	3.1.1	3.1.1.3 The system must [STARS-003] process secondary inputs from the FAA and DoD air traffic surveillance systems.
3.2.1.1.1.15	1	STARS-SSD-00098	False beacon targets received on side-lobes shall[1] be detected and suppressed, irrespective of adapted airport mask volumes.	3.1.1	3.1.1.3 The system must [STARS-003] process secondary inputs from the FAA and DoD air traffic surveillance systems.
3.2.1.1.1.16	1	STARS-SSD-00099	Weather data shall[1] be made available for display.	3.1.10	3.1.10.16 The system must [STARS-146] display weather data.
3.2.1.1.1.17	1	STARS-SSD-00100	Weather messages shall[1] be filtered to discard data that lie outside of a geographic area defined by adaptable parameters.	3.1.1	3.1.1.1 The system must [STARS-001] accept aircraft position and weather data si¬multaneously from multiple surveillance systems within geographic areas defined by site adaptable (SA) parame¬ters.
3.2.1.1.1.17	2	STARS-SSD-00101	If a radar sensor is in the declared failure state, weather messages from the associated radar shall[2] be filtered to prevent their use in weather processing and TCP display.	3.1.1	3.1.1.2 The system must [STARS-002] process digital primary inputs from the FAA and DoD air traffic surveillance systems, if available.
3.2.1.1.1.18	1	STARS-SSD-00102	Weather data from multiple surveillance systems shall[1] be converted to a common coordinate system.	3.1.1	3.1.1.2 The system must [STARS-002] process digital primary inputs from the FAA and DoD air traffic surveillance systems, if available. 3.1.1.3 The system must [STARS-003] process secondary inputs from the FAA and DoD air traffic surveillance systems.

3.2.1.1.1.18	2	STARS-SSD-00103	The ASR and ARSR weather levels shall[2] be mapped to the displayable weather levels according to the following table: <Related Table>	3.1.1 3.1.10	3.1.1.2 The system must [STARS-002] process digital primary inputs from the FAA and DoD air traffic surveillance systems, if available. 3.1.10.16 The system must [STARS-146] display weather data.
3.2.1.1.1.18	3	STARS-SSD-00104	When adapted for high azimuth spacing, ARSR weather picture extraction processing shall[3] apply the angular values to radial reports listed in the following table: <Related Table>	3.1.1	3.1.1.2 The system must [STARS-002] process digital primary inputs from the FAA and DoD air traffic surveillance systems, if available.
3.2.1.1.1.18	4	STARS-SSD-00105	When adapted for low azimuth spacing, ARSR weather picture extraction processing shall[4] apply the angular values to radial reports listed in the following table: <Related Table>	3.1.1	3.1.1.2 The system must [STARS-002] process digital primary inputs from the FAA and DoD air traffic surveillance systems, if available.
3.2.1.1.1.18	5	STARS-SSD-00106	The system shall[5] apply an aging time to weather reports from ARSR radars.	3.1.1	3.1.1.2 The system must [STARS-002] process digital primary inputs from the FAA and DoD air traffic surveillance systems, if available.
3.2.1.1.1.18	6	STARS-SSD-00107	The inclusion or exclusion, in the composite weather image, of weather data from each surveillance radar shall[6] be a site-specific adaptation parameter.	3.1.10	3.1.10.16 The system must [STARS-146] display weather data.
3.2.1.1.1.19	1	STARS-SSD-00108	Beacon and search strobe data shall[1] be accepted and recorded.	3.1.11	3.1.11.2 The system must [STARS-172] continuously record all input and output messages from external sources.
3.2.1.1.1.20	1	STARS-SSD-00109	Beacon and search RTQC messages, including sector marks, shall[1] be made available for system status monitoring and display with the exception that sector marks are never displayed.	3.1.11	3.1.11.3 The system must [STARS-173] record all data necessary to recreate system status, performance, environment, and situation displays.
3.2.1.1.1.21	1	STARS-SSD-00110	If available, sensor status messages and identification messages from all surveillance systems shall[1] be made available for system status monitoring.	3.1.11	3.1.11.3 The system must [STARS-173] record all data necessary to recreate system status, performance, environment, and situation displays.
3.2.1.1.1.22	1	STARS-SSD-00111	The number of target reports by target type and the number of target report errors shall[1] be counted for each radar, multilateration surveillance, ADS-B system and made available for system status and performance monitoring.	3.1.11	3.1.11.3 The system must [STARS-173] record all data necessary to recreate system status, performance, environment, and situation displays.
3.2.1.1.1.23	1	STARS-SSD-00112	Errors in the data received from each surveillance system shall[1] be detected and made available for system status and performance monitoring.	3.1.11	3.1.11.3 The system must [STARS-173] record all data necessary to recreate system status, performance, environment, and situation displays.

3.2.1.1.1.24	1	STARS-SSD-00113	Search target reports from an ASR-9 or an ASR-11 radar shall[1] be discarded if they do not exceed the quality filter threshold (if any) adapted for that radar.	3.1.1	3.1.1.2 The system must [STARS-002] process digital primary inputs from the FAA and DoD air traffic surveillance systems, if available.
3.2.1.1.1.24	2	STARS-SSD-00114	Surveillance-sensor-supplied accuracy estimates and quality indicator(s), if available, shall[2] be used to discard, but record, any target report whose positional uncertainty is greater than a threshold adapted for that surveillance-sensor or is designated as questionable by the quality indicator(s).	3.1.1	3.1.1.2 The system must [STARS-002] process digital primary inputs from the FAA and DoD air traffic surveillance systems, if available. 3.1.1.3 The system must [STARS-003] process secondary inputs from the FAA and DoD air traffic surveillance systems. 3.1.1.5 The system must [STARS-005] process ADS-B from the Surveillance Broadcast System (SBS). 3.1.1.6 The system must [STARS-006] process Virtual Radar (VR) from the SBS, when available.
3.2.1.1.1.25	1	STARS-SSD-00115	Search target reports from an ASR-9 radar shall[1] be discarded if they do not exceed the confidence filter threshold (if any) adapted for that radar.	3.1.1	3.1.1.2 The system must [STARS-002] process digital primary inputs from the FAA and DoD air traffic surveillance systems, if available.
3.2.1.1.1.26	1	STARS-SSD-00116	Reports from aircraft targets containing any valid Mode C value of -1000 ft or less shall[1] be processed as if they contained an invalid Mode C value.	3.1.3	3.1.3.5 The system must [STARS-035] enable and disable MCI alert processing for unassociated aircraft in conflict with an associated aircraft pair based upon pre-defined adaptation parameters.
3.2.1.1.1.27	1	STARS-SSD-00117	Search target reports from a long range radar shall[1] be discarded and counted if they do not fall within the maximum and minimum run length filter thresholds adapted for that radar.	3.1.1	3.1.1.2 The system must [STARS-002] process digital primary inputs from the FAA and DoD air traffic surveillance systems, if available.
3.2.1.1.2.1	1	STARS-SSD-00118	Search-only, beacon-only, radar-reinforced beacon, Multilateration, and ADS-B targets shall[1] be tracked.	3.1.2	3.1.2.1 The system must [STARS-011] automatically track all primary surveillance targets within a geographic area defined by SA parameters. 3.1.2.2 The system must [STARS-012] automatically track all secondary surveillance targets within a geographic area defined by SA parameters.
3.2.1.1.2.2	1	STARS-SSD-00119	Tracking of beacon tracks shall[1] continue using search-only targets during loss of beacon targets.	3.1.2	3.1.2.1 The system must [STARS-011] automatically track all primary surveillance targets within a geographic area defined by SA parameters.

3.2.1.1.2.3	1	STARS-SSD-00120	Targets shall[1] be tracked using reports from, as a minimum, a single sensor (surveillance system).	3.1.2	3.1.2.1 The system must [STARS-011] automatically track all primary surveillance targets within a geographic area defined by SA parameters. 3.1.2.2 The system must [STARS-012] automatically track all secondary surveillance targets within a geographic area defined by SA parameters.
3.2.1.1.2.4	1	STARS-SSD-00121	Targets shall[1] be tracked using data received concurrently from multiple sensors (surveillance systems), including targets from multiple sensors for the same aircraft.	3.1.2	3.1.2.1 The system must [STARS-011] automatically track all primary surveillance targets within a geographic area defined by SA parameters. 3.1.2.2 The system must [STARS-012] automatically track all secondary surveillance targets within a geographic area defined by SA parameters.
3.2.1.1.2.4	2	STARS-SSD-00122	If Dynamic Bias Correction is enabled by MCP input, tracks shall[2] be stitch-free regardless of target range, azimuth, or altitude.	3.1.10	3.1.10.8 The system must [STARS-138] display a target indicator at the composite position of each surveillance target received in multi-sensor and Fusion modes.
3.2.1.1.2.4	3	STARS-SSD-00123	The tracker shall[3] be capable of accepting altitude data with an LSB weight of either 100 ft or 25 ft, as specified by the sensor adaptation data.	3.1.2	3.1.2.4 The system must [STARS-014] perform altitude tracking, using target reports from both single and multisensory surveillance systems.
3.2.1.1.2.5	1	STARS-SSD-00124	The system plane shall[1] be divided into 2 nmi by 2 nmi adapted contiguous surveillance/altimeter tiles.	3.1.2	3.1.2.1 The system must [STARS-011] automatically track all primary surveillance targets within a geographic area defined by SA parameters. 3.1.2.2 The system must [STARS-012] automatically track all secondary surveillance targets within a geographic area defined by SA parameters.
3.2.1.1.2.6	1	STARS-SSD-00125	Each adapted surveillance/altimeter tile data shall[1] include: a. An adapted sensor preference hierarchy with sensors and altitude bands b. The Conflict Alert inhibit indicator c. The adapted magnetic variation at that location.	3.1.2	3.1.2.1 The system must [STARS-011] automatically track all primary surveillance targets within a geographic area defined by SA parameters. 3.1.2.2 The system must [STARS-012] automatically track all secondary surveillance targets within a geographic area defined by SA parameters.

3.2.1.1.2.6	4	STARS-SSD-00126	The set of sensors whose reports are eligible to initiate or update a track within the adapted altitude band of each adapted surveillance/altimeter data tile shall[4] be the adapted sensor preference hierarchy and which will be used to determine preference of surveillance data in multi-sensor display view.	3.1.2	3.1.2.1 The system must [STARS-011] automatically track all primary surveillance targets within a geographic area defined by SA parameters. 3.1.2.2 The system must [STARS-012] automatically track all secondary surveillance targets within a geographic area defined by SA parameters.
3.2.1.1.2.7	1	STARS-SSD-00127	Qualifying targets received concurrently from both short and long-range radars, and from multilateration sensors shall[1] be tracked.	3.1.2	3.1.2.1 The system must [STARS-011] automatically track all primary surveillance targets within a geographic area defined by SA parameters. 3.1.2.2 The system must [STARS-012] automatically track all secondary surveillance targets within a geographic area defined by SA parameters.
3.2.1.1.2.7	2	STARS-SSD-00128	When enabled via surveillance-sensor adaptation, tracking shall[2] accommodate surveillance-sensor-supplied accuracy estimates if this data is available from the target report.	3.1.2	3.1.2.1 The system must [STARS-011] automatically track all primary surveillance targets within a geographic area defined by SA parameters. 3.1.2.2 The system must [STARS-012] automatically track all secondary surveillance targets within a geographic area defined by SA parameters.
3.2.1.1.2.7	3	STARS-SSD-00129	When surveillance-sensor-supplied accuracy estimates are not available, or the function is disabled tracking shall[3] use the per-surveillance-sensor adapted default accuracy estimate values.	3.1.2	3.1.2.1 The system must [STARS-011] automatically track all primary surveillance targets within a geographic area defined by SA parameters. 3.1.2.2 The system must [STARS-012] automatically track all secondary surveillance targets within a geographic area defined by SA parameters.
3.2.1.1.2.7	4	STARS-SSD-00130	When a surveillance sensor has different accuracies as a function of its mode, tracking shall[4] use per-surveillance-sensor, per mode adapted default accuracy estimate values.	3.1.2	3.1.2.1 The system must [STARS-011] automatically track all primary surveillance targets within a geographic area defined by SA parameters. 3.1.2.2 The system must [STARS-012] automatically track all secondary surveillance targets within a geographic area defined by SA parameters.

3.2.1.1.2.8	1	STARS-SSD-00131	Correlation shall[1] be performed on all targets received to determine whether the target corresponds to an existing track.	3.1.2	3.1.2.1 The system must [STARS-011] automatically track all primary surveillance targets within a geographic area defined by SA parameters. 3.1.2.2 The system must [STARS-012] automatically track all secondary surveillance targets within a geographic area defined by SA parameters.
3.2.1.1.2.8	2	STARS-SSD-00132	Correlation shall[2] be inhibited for targets within an adaptable geographic volume, if the correlation represents a Mode 3/A code change below the code lock altitude.	3.1.2	3.1.2.1 The system must [STARS-011] automatically track all primary surveillance targets within a geographic area defined by SA parameters. 3.1.2.2 The system must [STARS-012] automatically track all secondary surveillance targets within a geographic area defined by SA parameters.
3.2.1.1.2.8	3	STARS-SSD-00133	The code lock altitude shall[3] be an adapted offset above the adapted elevation of the airport associated with the volume.	3.1.2	3.1.2.1 The system must [STARS-011] automatically track all primary surveillance targets within a geographic area defined by SA parameters. 3.1.2.2 The system must [STARS-012] automatically track all secondary surveillance targets within a geographic area defined by SA parameters.
3.2.1.1.2.9	1	STARS-SSD-00134	The position and velocity of the correlated track shall[1] be smoothed and predicted using position data from eligible correlated target reports.	3.1.2	3.1.2.3 The system must [STARS-013] perform ground plane tracking, using target reports from both single and multisensory surveillance systems. 3.1.2.4 The system must [STARS-014] perform altitude tracking, using target reports from both single and multisensory surveillance systems.
3.2.1.1.2.9	2	STARS-SSD-00135	A target report from a sensor shall[2] be inhibited from updating the correlated track if the time interval since the track was last updated has not exceeded the adapted minimum track-update interval for this sensor or the last sensor to update the track.	3.1.2	3.1.2.3 The system must [STARS-013] perform ground plane tracking, using target reports from both single and multisensory surveillance systems. 3.1.2.4 The system must [STARS-014] perform altitude tracking, using target reports from both single and multisensory surveillance systems.

3.2.1.1.2.9	4	STARS-SSD-00136	A target report from a sensor shall[4] be inhibited from updating the correlated track if both of the following conditions apply: a. The computed track-updating priority level for this report is less than the previous report that updated the track, or was eligible to update the track but was inhibited based on 3.2.1.1.2.9[2] b. The time interval since the track was last updated is less than the adapted scan rate for the last sensor whose report updated the track, or was eligible to update the track but was inhibited based on 3.2.1.1.2.9[2]	3.1.2	3.1.2.3 The system must [STARS-013] perform ground plane tracking, using target reports from both single and multisensory surveillance systems. 3.1.2.4 The system must [STARS-014] perform altitude tracking, using target reports from both single and multisensory surveillance systems.
3.2.1.1.2.9	5	STARS-SSD-00137	An established search-only track shall[5] be updated by any correlated target report from the adapted sensors within the surveillance/altimeter data tile with priority given to the preferred sensor.	3.1.2	3.1.2.1 The system must [STARS-011] automatically track all primary surveillance targets within a geographic area defined by SA parameters. 3.1.2.2 The system must [STARS-012] automatically track all secondary surveillance targets within a geographic area defined by SA parameters.
3.2.1.1.2.9	7	STARS-SSD-00138	The track-updating priority for a report from a sensor shall[7] be computed based on sensor type, sensor preference and conditions for Standard (Terminal) Separation specified in 3.12.7[19].	3.2.8	3.1.2.1 The system must [STARS-011] automatically track all primary surveillance targets within a geographic area defined by SA parameters. 3.1.2.2 The system must [STARS-012] automatically track all secondary surveillance targets within a geographic area defined by SA parameters.
3.2.1.1.2.10	1	STARS-SSD-00139	The position and velocity of the uncorrelated track shall[1] be predicted using previously determined position and velocity. A track being updated in this manner is "laterally coasting".	3.1.2	3.1.2.3 The system must [STARS-013] perform ground plane tracking, using target reports from both single and multisensory surveillance systems. 3.1.2.4 The system must [STARS-014] perform altitude tracking, using target reports from both single and multisensory surveillance systems.

3.2.1.1.2.10	2	STARS-SSD-00140	A track shall[2] enter the lateral coasting state if it remains uncorrelated for a period of time that exceeds the adapted update rate is for the last sensor to correlate with the track.	3.1.2	3.1.2.1 The system must [STARS-011] automatically track all primary surveillance targets within a geographic area defined by SA parameters. 3.1.2.2 The system must [STARS-012] automatically track all secondary surveillance targets within a geographic area defined by SA parameters.
3.2.1.1.2.11	1	STARS-SSD-00141	Tracks that fail to correlate for an adaptable number of consecutive update cycles shall[1] be inhibited from further updating.	3.1.2	3.1.2.1 The system must [STARS-011] automatically track all primary surveillance targets within a geographic area defined by SA parameters. 3.1.2.2 The system must [STARS-012] automatically track all secondary surveillance targets within a geographic area defined by SA parameters.
3.2.1.1.2.12	1	STARS-SSD-00142	Based upon adaptation, an arrival/overflight tracks in handoff from an ARTCC/Adjacent TRACON that has acquired from an interfacility flight plan and has not correlated for more than an adaptable number of update cycles shall[1] either be updated by that facilities Track Update (TU) messages or be frozen at the last displayed position.	3.1.2	3.1.2.1 The system must [STARS-011] automatically track all primary surveillance targets within a geographic area defined by SA parameters. 3.1.2.2 The system must [STARS-012] automatically track all secondary surveillance targets within a geographic area defined by SA parameters.
3.2.1.1.2.13	1	STARS-SSD-00143	When TU messages are interrupted and recorrelation has not occurred, the track shall[1] only be updated when TUs are again received or recorrelation occurs.	3.1.2	3.1.2.1 The system must [STARS-011] automatically track all primary surveillance targets within a geographic area defined by SA parameters. 3.1.2.2 The system must [STARS-012] automatically track all secondary surveillance targets within a geographic area defined by SA parameters.
3.2.1.1.2.14	1	STARS-SSD-00144	Target reports that do not correlate with an existing track shall[1] automatically initiate a new track.	3.1.2	3.1.2.1 The system must [STARS-011] automatically track all primary surveillance targets within a geographic area defined by SA parameters. 3.1.2.2 The system must [STARS-012] automatically track all secondary surveillance targets within a geographic area defined by SA parameters.
3.2.1.1.2.14	2	STARS-SSD-00145	Automatic search track initiation on uncorrelated search reports from a sensor that is not the adapted preferred sensor shall[2] be inhibited unless that sensor is adapted to the surveillance/altimeter data tile and to enable search-only track initiation.	3.1.2	3.1.2.1 The system must [STARS-011] automatically track all primary surveillance targets within a geographic area defined by SA parameters.

3.2.1.1.2.15	1	STARS-SSD-00146	Automatic track initiation on search-only targets shall[1] be inhibited when the target position is inside adapted clutter areas, the track speed is above an adapted value, or the scan-to-scan change in speed exceeds an adapted threshold.	3.1.2	3.1.2.1 The system must [STARS-011] automatically track all primary surveillance targets within a geographic area defined by SA parameters.
3.2.1.1.2.15	2	STARS-SSD-00147	Track establishment on search-only target reports from a sensor shall[2] be inhibited until m reports from that sensor during n consecutive scans have been received, where m is adaptable per-sensor between 2 and 4, and n is adaptable between m and 5.	3.1.2	3.1.2.1 The system must [STARS-011] automatically track all primary surveillance targets within a geographic area defined by SA parameters.
3.2.1.1.2.15	3	STARS-SSD-00148	Track establishment on search-only targets shall[3] be delayed if the target speed is below an adapted minimum or the target has not moved a distance greater than d from the first report from that sensor, where d is a per-sensor adapted distance (range 0 to 1.5 nautical miles).	3.1.2	3.1.2.1 The system must [STARS-011] automatically track all primary surveillance targets within a geographic area defined by SA parameters.
3.2.1.1.2.15	4	STARS-SSD-00149	A delayed tentative search track shall[4] be dropped if correlation after the nth scan is missed for an adapted number of total scans.	3.1.2	3.1.2.1 The system must [STARS-011] automatically track all primary surveillance targets within a geographic area defined by SA parameters.
3.2.1.1.2.15	5	STARS-SSD-00150	Promotion of a delayed tentative search track to the established state shall[5] be inhibited until the reported target position has moved a distance greater than d from the first report received from that sensor.	3.1.2	3.1.2.1 The system must [STARS-011] automatically track all primary surveillance targets within a geographic area defined by SA parameters.
3.2.1.1.2.15	6	STARS-SSD-00151	An unassociated established search track shall[6] be dropped if the track's speed falls below an adapted minimum value for an adapted number of seconds.	3.1.2	3.1.2.1 The system must [STARS-011] automatically track all primary surveillance targets within a geographic area defined by SA parameters.
3.2.1.1.2.15	7	STARS-SSD-00152	Established search track update using search only targets shall[7] be inhibited if the update will cause the track to transition beyond an adapted maximum speed or if the scan to scan change in speed exceeds an adapted value.	3.1.2	3.1.2.1 The system must [STARS-011] automatically track all primary surveillance targets within a geographic area defined by SA parameters.
3.2.1.1.2.15	8	STARS-SSD-00153	Track establishment on beacon-only and radar-reinforced-beacon targets from a radar sensor shall[8] occur when two consecutive reports for the target are received on two consecutive scans from that sensor.	3.1.2	3.1.2.2 The system must [STARS-012] automatically track all secondary surveillance targets within a geographic area defined by SA parameters.
3.2.1.1.2.15	9	STARS-SSD-00154	Track establishment on beacon-only and radar-reinforced-beacon targets from a radar sensor shall[9] be inhibited until M reports from that sensor during N consecutive scans have been received.	3.1.2	3.1.2.2 The system must [STARS-012] automatically track all secondary surveillance targets within a geographic area defined by SA parameters.

3.2.1.1.2.15	10	STARS-SSD-00155	Track establishment on beacon-only and radar-reinforced-beacon targets from a radar sensor shall[10] be delayed if the target has not moved a lateral distance greater than D from the first report from that sensor, where D is a per-sensor adapted distance.	3.1.2	3.1.2.1 The system must [STARS-011] automatically track all primary surveillance targets within a geographic area defined by SA parameters. 3.1.2.2 The system must [STARS-012] automatically track all secondary surveillance targets within a geographic area defined by SA parameters.
3.2.1.1.2.15	11	STARS-SSD-00156	A delayed tentative beacon track from a radar sensor shall[11] be dropped if correlation after the Nth scan is missed for an adapted number of total scans.	3.1.2	3.1.2.1 The system must [STARS-011] automatically track all primary surveillance targets within a geographic area defined by SA parameters. 3.1.2.2 The system must [STARS-012] automatically track all secondary surveillance targets within a geographic area defined by SA parameters.
3.2.1.1.2.15	12	STARS-SSD-00157	Promotion of a delayed tentative beacon track from a radar sensor to the established state shall[12] be inhibited until the reported target position has moved a distance greater than D from the first report received from that sensor, unless 2 consecutive target reports are received from the same sensor.	3.1.2	3.1.2.1 The system must [STARS-011] automatically track all primary surveillance targets within a geographic area defined by SA parameters. 3.1.2.2 The system must [STARS-012] automatically track all secondary surveillance targets within a geographic area defined by SA parameters.
3.2.1.1.2.15	13	STARS-SSD-00158	Track establishment on targets from a non-radar sensor shall[13] be inhibited until M reports from that sensor during N consecutive update intervals have been received.	3.1.2	3.1.2.2 The system must [STARS-012] automatically track all secondary surveillance targets within a geographic area defined by SA parameters.
3.2.1.1.2.15	14	STARS-SSD-00159	Track establishment on targets from a non-radar sensor that do not have a Mode 3/A code indicating an Alert Special Condition (SPC) shall[14] be delayed if the target has not moved a lateral distance greater than D from the first report from that sensor.	3.1.2	3.1.2.2 The system must [STARS-012] automatically track all secondary surveillance targets within a geographic area defined by SA parameters.
3.2.1.1.2.15	15	STARS-SSD-00160	A delayed tentative track from a non-radar sensor shall[15] be dropped if correlation after the Nth update interval is missed for an adapted number of update intervals.	3.1.2	3.1.2.2 The system must [STARS-012] automatically track all secondary surveillance targets within a geographic area defined by SA parameters.
3.2.1.1.2.15	16	STARS-SSD-00161	Promotion of a delayed tentative track from a non-radar sensor to the established state shall[16] be inhibited until the reported target position has moved a distance greater than D from the first report received from that sensor.	3.1.2	3.1.2.2 The system must [STARS-012] automatically track all secondary surveillance targets within a geographic area defined by SA parameters.

3.2.1.1.2.15	17	STARS-SSD-00162	Track initiation on targets from a non-radar sensor that have neither a Mode 3/A code nor a Mode C altitude shall[17] be inhibited. This will prevent the possibility of establishing a second track for an already tracked target if such reports fail to correlate with the first track.	3.1.2	3.1.2.2 The system must [STARS-012] automatically track all secondary surveillance targets within a geographic area defined by SA parameters.
3.2.1.1.2.16	1	STARS-SSD-00163	Altitude for correlated tracks shall[1] be smoothed and predicted using Mode C altitude data from correlated target reports.	3.1.2	3.1.2.4 The system must [STARS-014] perform altitude tracking, using target reports from both single and multisensory surveillance systems.
3.2.1.1.2.16	2	STARS-SSD-00164	Smoothed altitude, limited to within an adaptable tolerance of the reported Mode C altitude and then pressure corrected, shall[2] be used for determination of inclusion of the target within geographic volumes.	3.1.2	3.1.2.1 The system must [STARS-011] automatically track all primary surveillance targets within a geographic area defined by SA parameters. 3.1.2.2 The system must [STARS-012] automatically track all secondary surveillance targets within a geographic area defined by SA parameters.
3.2.1.1.2.16	3	STARS-SSD-00165	An altitude stabilized track shall[3] be determined when a counter for each track, being incremented by one for each track update with valid Mode C altitude data, reaches an adaptable threshold.	3.1.2	3.1.2.4 The system must [STARS-014] perform altitude tracking, using target reports from both single and multisensory surveillance systems.
3.2.1.1.2.16	4	STARS-SSD-00166	Pilot-reported altitude shall[4] be cleared when the associated track is considered altitude-stabilized and display of Mode C altitude is not inhibited.	3.1.2	3.1.2.4 The system must [STARS-014] perform altitude tracking, using target reports from both single and multisensory surveillance systems.
3.2.1.1.2.16.1	1	STARS-SSD-00167	An associated arrival or departure track that has a valid altitude shall[1] be monitored for predicted descent below the floor or climb above the ceiling of an adapted ASV monitor volume if the volume is enabled for ASV monitoring for the track's arrival or departure airport.	3.1.2	3.1.2.1 The system must [STARS-011] automatically track all primary surveillance targets within a geographic area defined by SA parameters. 3.1.2.2 The system must [STARS-012] automatically track all secondary surveillance targets within a geographic area defined by SA parameters.
3.2.1.1.2.16.1	4	STARS-SSD-00168	An ASV Alert shall[4] be made available for display for any monitored arrival/departure track that is predicted to exit the floor/ceiling within an adaptable look-ahead time.	3.1.10	3.1.10.25 The system must [STARS-155] generate visual alerts based upon the adaptation of each individual facility.
3.2.1.1.2.18	1	STARS-SSD-00169	Altitude for tracks with Mode C altitude data that is missing or has altitude change rates that exceed an adaptable value shall[1] be predicted using previously determined altitude data.	3.1.2	3.1.2.4 The system must [STARS-014] perform altitude tracking, using target reports from both single and multisensory surveillance systems.

3.2.1.1.2.18	2	STARS-SSD-00170	A track that has received at least one valid altitude report shall[2] enter the Vertical Coast state upon receipt of invalid Mode C altitude data from any adapted sensor or, if adapted, upon the lack of any subsequent reports.	3.1.2	3.1.2.4 The system must [STARS-014] perform altitude tracking, using target reports from both single and multisensory surveillance systems.
3.2.1.1.2.18	3	STARS-SSD-00171	A vertically coasting track shall[3] enter the Vertically-Coasted-Out state if no valid altitude report is received in an adaptable period of time.	3.1.2	3.1.2.4 The system must [STARS-014] perform altitude tracking, using target reports from both single and multisensory surveillance systems.
3.2.1.1.2.19	1	STARS-SSD-00172	A correlated track shall[1] be linked with a flight plan that is eligible for automatic acquisition or an associated track which is inhibited from updating.	3.1.2	3.1.2.5 The system must [STARS-015] automatically change an unassociated track to an associated track, and vice versa, when geographical, status, and empirical parameters are satisfied.
3.2.1.1.2.20	1	STARS-SSD-00173	Discrete beacon code tracks and flight plans that satisfy adaptable geographic position and altitude criteria shall[1] be eligible for automatic acquisition.	3.1.2	3.1.2.5 The system must [STARS-015] automatically change an unassociated track to an associated track, and vice versa, when geographical, status, and empirical parameters are satisfied.
3.2.1.1.2.20	2	STARS-SSD-00174	When a flight plan has an entry fix that has been adapted with a proximity criterion or an auto acquisition filter volume for the flight type, the track shall[2] be eligible for association to the flight plan only if it is within the adapted proximity limit of the flight plan entry fix or it is within the auto acquisition constraint filter volume.	3.1.2	3.1.2.5 The system must [STARS-015] automatically change an unassociated track to an associated track, and vice versa, when geographical, status, and empirical parameters are satisfied.
3.2.1.1.2.20	3	STARS-SSD-00175	When a departure flight plan has an entry fix that has been adapted with a departure altitude limit or does not have an entry fix that corresponds to an adapted fix, or the adapted fix does not have any adapted constraints for departure flights, the track shall[3] be ineligible for association to the flight plan if it has a valid altitude above the departure altitude limit or is located within the area that is currently displayed at the pending owner's TCP.	3.1.2	3.1.2.5 The system must [STARS-015] automatically change an unassociated track to an associated track, and vice versa, when geographical, status, and empirical parameters are satisfied.
3.2.1.1.2.20	4	STARS-SSD-00176	When a non-departure flight plan has an entry fix that has been adapted with an inbound altitude limit, or does not have an entry fix that corresponds to an adapted fix, or the adapted fix does not have any adapted constraints for non-departure flights, the track shall[4] be ineligible for association to the flight plan if it has a valid altitude above the inbound altitude limit or it is located within the area that is currently displayed at the pending owner's TCP.	3.1.2	3.1.2.5 The system must [STARS-015] automatically change an unassociated track to an associated track, and vice versa, when geographical, status, and empirical parameters are satisfied.

3.2.1.1.2.20	5	STARS-SSD-00177	When no valid track altitude exists, the system shall[5] use an adaptable parameter to determine if the track satisfies the altitude eligibility criteria for the individual automatic acquisition area.	3.1.2	3.1.2.5 The system must [STARS-015] automatically change an unassociated track to an associated track, and vice versa, when geographical, status, and empirical parameters are satisfied.
3.2.1.1.2.20	8	STARS-SSD-00178	The system shall[8] support adapted auto acquisition constraint filters and adapted primary terminal area auto acquisition volumes.	3.1.2	3.1.2.5 The system must [STARS-015] automatically change an unassociated track to an associated track, and vice versa, when geographical, status, and empirical parameters are satisfied.
3.2.1.1.2.21	1	STARS-SSD-00179	Automatic acquisition shall[1] be inhibited for flight plans with duplicate beacon codes.	3.1.2	3.1.2.5 The system must [STARS-015] automatically change an unassociated track to an associated track, and vice versa, when geographical, status, and empirical parameters are satisfied.
3.2.1.1.2.22	1	STARS-SSD-00180	Associated beacon tracks that are inhibited from updating shall[1] remain eligible for automatic acquisition.	3.1.2	3.1.2.5 The system must [STARS-015] automatically change an unassociated track to an associated track, and vice versa, when geographical, status, and empirical parameters are satisfied.
3.2.1.1.2.23	1	STARS-SSD-00181	Automatic acquisition shall[1] occur when the beacon code of the unassociated track matches a special automatic adapted beacon code.	3.1.2	3.1.2.5 The system must [STARS-015] automatically change an unassociated track to an associated track, and vice versa, when geographical, status, and empirical parameters are satisfied.
3.2.1.1.2.24	1	STARS-SSD-00182	Flight data for special automatic acquisition shall[1] be adaptable for each beacon code including aircraft identity, aircraft type, control position, scratch pad, and flight status.	3.1.2	3.1.2.5 The system must [STARS-015] automatically change an unassociated track to an associated track, and vice versa, when geographical, status, and empirical parameters are satisfied.
3.2.1.1.2.24	2	STARS-SSD-00183	If the control position data is not included in or derivable from the adapted flight data, then the association to the adapted flight plan data shall[2] occur upon a manual initiate control action.	3.1.7	3.1.7.2 The system must [STARS-082] process Arrival, Departure, and Overflight Flight Plans generated internally by an adjacent Terminal facility. 3.1.7.3 The system must [STARS-083] process Arrival, Departure, and Overflight Flight Plans generated internally by an ARTCC.
3.2.1.1.2.25	1	STARS-SSD-00184	An associated arrival track that is not excluded from Arrival Auto-drop processing and that enters an adapted auto-drop area shall[1] be eligible for Arrival Auto-drop processing.	3.1.2	3.1.2.5 The system must [STARS-015] automatically change an unassociated track to an associated track, and vice versa, when geographical, status, and empirical parameters are satisfied.
3.2.1.1.2.25	2	STARS-SSD-00185	When a track has no valid altitude and is in an auto-drop area adapted to use pilot-reported altitude and that altitude has been entered, the system shall[2] use the manually-entered pilot-reported altitude to determine whether the aircraft satisfies the altitude criteria for inclusion in the auto-drop area.	3.1.2	3.1.2.5 The system must [STARS-015] automatically change an unassociated track to an associated track, and vice versa, when geographical, status, and empirical parameters are satisfied.

3.2.1.1.2.25	3	STARS-SSD-00186	When a track has no valid altitude and pilot-reported altitude is either not present or is not being used, the system shall[3] use an adaptable parameter per individual auto-drop area to determine whether the aircraft satisfies the altitude criteria for inclusion in the auto-drop area.	3.1.2	3.1.2.5 The system must [STARS-015] automatically change an unassociated track to an associated track, and vice versa, when geographical, status, and empirical parameters are satisfied.
3.2.1.1.2.25	4	STARS-SSD-00187	The adaptable parameters manually-entered pilot-reported altitude and no valid altitude data for each auto-drop area shall[4] have default values assigned in adaptation.	3.1.2	3.1.2.5 The system must [STARS-015] automatically change an unassociated track to an associated track, and vice versa, when geographical, status, and empirical parameters are satisfied.
3.2.1.1.2.25	6	STARS-SSD-00188	A track at a TCW while in FMA mode that is marked as subject to Arrival Auto-drop processing shall[6] be displayed as an associated track if using a fast update single sensor or unassociated track if using single radar or multi-sensor display input.	3.1.2 3.1.4	3.1.2.5 The system must [STARS-015] automatically change an unassociated track to an associated track, and vice versa, when geographical, status, and empirical parameters are satisfied. 3.1.4.5 The system must [STARS-055] provide for the adaptability of the FMA display mode.
3.2.1.1.2.25	8	STARS-SSD-00189	A track or a flight plan that is associated with a track that is marked as subject to Arrival Auto-drop processing shall[8] be displayed as an unassociated track or be eligible for display as a disassociated flight plan respectively at TCPs that are not in FMA mode.	3.1.2	3.1.2.5 The system must [STARS-015] automatically change an unassociated track to an associated track, and vice versa, when geographical, status, and empirical parameters are satisfied.
3.2.1.1.2.25	10	STARS-SSD-00190	A track shall[10] be excluded from Arrival Auto-drop processing if it is in hold and the Arrival Auto-drop area is adapted to not process tracks in hold, is under the control of another facility, or its ground speed or altitude exceeds an adapted value for this auto-drop area.	3.1.2	3.1.2.5 The system must [STARS-015] automatically change an unassociated track to an associated track, and vice versa, when geographical, status, and empirical parameters are satisfied.
3.2.1.1.2.25	12	STARS-SSD-00191	A track without a qualifying exit fix for the auto-drop area shall[12] be excluded from Arrival Auto-drop processing unless the auto-drop area is adapted to allow aircraft to qualify regardless of exit fix.	3.1.2	3.1.2.5 The system must [STARS-015] automatically change an unassociated track to an associated track, and vice versa, when geographical, status, and empirical parameters are satisfied.
3.2.1.1.2.26	1	STARS-SSD-00192	A flight plan whose arrival track becomes subject to Arrival Auto-drop processing shall[1] be retained until it is no longer associated with the track and an adapted period has elapsed from the time it became subject to Arrival Auto-drop processing.	3.1.7	3.1.7.2 The system must [STARS-082] process Arrival, Departure, and Overflight Flight Plans generated internally by an adjacent Terminal facility. 3.1.7.3 The system must [STARS-083] process Arrival, Departure, and Overflight Flight Plans generated internally by an ARTCC.

3.2.1.1.2.26	2	STARS-SSD-00193	Flight plans in a suspended status shall[2] be retained indefinitely unless removed by explicit action.	3.1.7	3.1.7.2 The system must [STARS-082] process Arrival, Departure, and Overflight Flight Plans generated internally by an adjacent Terminal facility. 3.1.7.3 The system must [STARS-083] process Arrival, Departure, and Overflight Flight Plans generated internally by an ARTCC.
3.2.1.1.2.26	3	STARS-SSD-00194	When 90 seconds has elapsed after all TCPs have switched back from EFSL to FSL, and if the EFSL IFDT link is offline, the software shall[3] delete all flight plans in EFSL and deconsolidate TCPs back to their default position.	3.1.7 3.2.1	3.1.7.2 The system must [STARS-082] process Arrival, Departure, and Overflight Flight Plans generated internally by an adjacent Terminal facility. 3.1.7.3 The system must [STARS-083] process Arrival, Departure, and Overflight Flight Plans generated internally by an ARTCC. 3.2.1.1 Full Service: All operational functionality and capacity must [STARS-211] be available at each local and remote TCP. 3.2.1.2 Emergency Full Service: All operational functionality and capacity must [STARS-212] be available at each local and remote TCP.
3.2.1.1.2.27	1	STARS-SSD-00195	A disassociated track inhibited from updating shall[1] be eligible for automatic acquisition when it has a discrete beacon code.	3.1.2	3.1.2.5 The system must [STARS-015] automatically change an unassociated track to an associated track, and vice versa, when geographical, status, and empirical parameters are satisfied.
3.2.1.1.2.28	1	STARS-SSD-00196	An arrival track that exits from an adapted arrival auto-drop area shall[1] be marked as not subject to Arrival Auto-drop processing.	3.1.2	3.1.2.5 The system must [STARS-015] automatically change an unassociated track to an associated track, and vice versa, when geographical, status, and empirical parameters are satisfied.
3.2.1.1.2.28	2	STARS-SSD-00197	An arrival track in an adapted arrival auto-drop area shall[2] remain associated with its flight plan until the track drops or the flight plan is terminated.	3.1.2	3.1.2.5 The system must [STARS-015] automatically change an unassociated track to an associated track, and vice versa, when geographical, status, and empirical parameters are satisfied.
3.2.1.1.2.28	3	STARS-SSD-00198	Subsequent to the arrival track drop, the flight plan shall[3] be inhibited from associating with any track that is inside the adapted arrival auto-drop area.	3.1.2	3.1.2.5 The system must [STARS-015] automatically change an unassociated track to an associated track, and vice versa, when geographical, status, and empirical parameters are satisfied.

3.2.1.1.2.29	1	STARS-SSD-00199	An interfacility arrival track that has auto-acquired and subsequently exits radar coverage and is under control of an adjacent facility shall[1] be disassociated and its flight plan retained for an adapted time period.	3.1.2	3.1.2.5 The system must [STARS-015] automatically change an unassociated track to an associated track, and vice versa, when geographical, status, and empirical parameters are satisfied.
3.2.1.1.2.30	1	STARS-SSD-00200	An associated departure track shall[1] be disassociated from its flight plan when the track enters any of the adapted primary departure drop zone for the terminal area, unless the track is in hand-off status or is under control of the STARS facility.	3.1.2	3.1.2.5 The system must [STARS-015] automatically change an unassociated track to an associated track, and vice versa, when geographical, status, and empirical parameters are satisfied.
3.2.1.1.2.30	2	STARS-SSD-00201	An associated track changing from a discrete beacon code to a non-discrete beacon code contained within an adaptable set of beacon codes shall[2] be disassociated from its flight plan, unless it was automatically unsuspended due to a beacon code mismatch, with the flight plan terminated in an adaptable time unless it reacquires or is in a suspended state.	3.1.2	3.1.2.5 The system must [STARS-015] automatically change an unassociated track to an associated track, and vice versa, when geographical, status, and empirical parameters are satisfied.
3.2.1.1.2.30	4	STARS-SSD-00202	The system shall[4] use the manually-entered pilot-reported altitude to determine whether the aircraft satisfies the altitude criteria for inclusion in the departure drop zones when no valid track altitude exists.	3.1.2	3.1.2.5 The system must [STARS-015] automatically change an unassociated track to an associated track, and vice versa, when geographical, status, and empirical parameters are satisfied.
3.2.1.1.2.30	5	STARS-SSD-00203	The system shall[5] use adaptable parameters, for manually-entered pilot-reported and no valid altitude, per individual departure drop zone to determine whether the aircraft satisfies the altitude criteria for inclusion in the departure drop zones. These parameters are to have predefined defaulted values.	3.1.2	3.1.2.5 The system must [STARS-015] automatically change an unassociated track to an associated track, and vice versa, when geographical, status, and empirical parameters are satisfied.
3.2.1.1.2.30	8	STARS-SSD-00204	An associated departure track shall[8] be disassociated from its flight plan when the track enters any of the adapted secondary departure drop zone.	3.1.2	3.1.2.5 The system must [STARS-015] automatically change an unassociated track to an associated track, and vice versa, when geographical, status, and empirical parameters are satisfied.
3.2.1.1.2.30	11	STARS-SSD-00205	When not under the control of another facility a track shall[11] be automatically disassociated from its flight plan and the flight plan placed in suspend status if its beacon code has changed to indicate a mismatch for an adaptable period of time within an adaptable timeframe following association after auto-acquisition.	3.1.2	3.1.2.5 The system must [STARS-015] automatically change an unassociated track to an associated track, and vice versa, when geographical, status, and empirical parameters are satisfied.

3.2.1.1.2.30	12	STARS-SSD-00206	An associated arrival or overflight track, that has never been owned by the STARS system, shall[12] be disassociated from its flight plan if it enters a secondary drop zone that is adapted to be eligible to process these types of flight.	3.1.2	3.1.2.5 The system must [STARS-015] automatically change an unassociated track to an associated track, and vice versa, when geographical, status, and empirical parameters are satisfied.
3.2.1.1.2.31	1	STARS-SSD-00207	A non-primary target report that is inside an adaptable airport mask volume, and has a qualifying Mode 3/A code and altitude, and does not correlate with an established track shall[1] be discarded.	3.1.1	3.1.1.3 The system must [STARS-003] process secondary inputs from the FAA and DoD air traffic surveillance systems.
3.2.1.1.2.31	2	STARS-SSD-00208	The altitude of a non-primary target report shall[2] prequalify for an individual airport mask volume if it has a valid altitude below the adapted volume ceiling or the volume allows invalid altitude to qualify and the report has an invalid altitude.	3.1.1	3.1.1.3 The system must [STARS-003] process secondary inputs from the FAA and DoD air traffic surveillance systems.
3.2.1.1.2.31	4	STARS-SSD-00209	The Mode 3/A code reply from a target shall[4] qualify for airport mask volume filtering if it is not indicating an Alert SPC.	3.1.1	3.1.1.3 The system must [STARS-003] process secondary inputs from the FAA and DoD air traffic surveillance systems.
3.2.1.1.2.31	6	STARS-SSD-00210	A track that is subject to airport mask volume processing shall[6] only be updated by non-primary target reports.	3.1.2	3.1.2.2 The system must [STARS-012] automatically track all secondary surveillance targets within a geographic area defined by SA parameters.
3.2.1.1.2.31	7	STARS-SSD-00211	An established track shall[7] be marked as subject to airport mask volume processing when the track correlates with a non-primary target report that has a qualifying Mode 3/A code and is inside an airport mask volume with either a valid altitude or an invalid altitude with the volume set to accept invalid altitudes.	3.1.2	3.1.2.2 The system must [STARS-012] automatically track all secondary surveillance targets within a geographic area defined by SA parameters.
3.2.1.1.2.31	8	STARS-SSD-00212	Tracks that are marked as subject to airport mask volume processing, and are unassociated or marked as subject to Arrival Auto-drop processing, shall[8] be displayed at a TCW in FMA mode or a TCP not in FMA mode only if display of these tracks is enabled.	3.1.10	3.1.10.8 The system must [STARS-138] display a target indicator at the composite position of each surveillance target received in multi-sensor and Fusion modes.
3.2.1.1.2.31	10	STARS-SSD-00213	A track shall[10] be marked as not subject to airport mask volume processing when the track correlates with a non-primary target report that has either a non-qualifying Mode 3/A code or a valid altitude below the adapted volume ceiling or an invalid altitude with the volume set to accept invalid altitudes.	3.1.2	3.1.2.2 The system must [STARS-012] automatically track all secondary surveillance targets within a geographic area defined by SA parameters.
3.2.1.1.2.31	11	STARS-SSD-00214	A non-primary target report that correlates with a track that is subject to airport mask volume processing, and which provides a positive indication that the aircraft has landed, shall[11] cause the track to be dropped.	3.1.2	3.1.2.5 The system must [STARS-015] automatically change an unassociated track to an associated track, and vice versa, when geographical, status, and empirical parameters are satisfied.

3.2.1.1.2.31	12	STARS-SSD-00215	A track shall[12] be dropped if has remained unassociated or subject to Arrival Auto-drop processing as well as in an airport mask volume processing for a period of time that exceeds the adapted drop time for the airport mask volume.	3.1.2	3.1.2.5 The system must [STARS-015] automatically change an unassociated track to an associated track, and vice versa, when geographical, status, and empirical parameters are satisfied.
3.2.1.1.2.32	1	STARS-SSD-00216	ASR-9 or ASR-11 search target track eligibility field processing shall[1] be enabled or inhibited per radar using an adaptation parameter.	3.1.2	3.1.2.1 The system must [STARS-011] automatically track all primary surveillance targets within a geographic area defined by SA parameters.
3.2.1.1.2.32	2	STARS-SSD-00217	If track eligibility processing is enabled for a radar, then adapted values of the search target track eligibility field shall[2] be used to determine that a search target is allowed to initiate a new search track, update a tentative search track, update an established search track, or update an established beacon track.	3.1.2	3.1.2.1 The system must [STARS-011] automatically track all primary surveillance targets within a geographic area defined by SA parameters.
3.2.1.1.2.32	6	STARS-SSD-00218	If track eligibility processing is enabled for a radar, then an unassociated established search track shall[6] be dropped if not updated by adapted values of the track eligibility field in an adapted number of scans.	3.1.2	3.1.2.5 The system must [STARS-015] automatically change an unassociated track to an associated track, and vice versa, when geographical, status, and empirical parameters are satisfied.
3.2.1.1.2.33	1	STARS-SSD-00219	Adaptable target processing volume polygons shall[1] be defined using latitude / longitude coordinates plus associated floor and ceiling altitudes along with an enable / inhibit parameter.	3.1.2	3.1.2.1 The system must [STARS-011] automatically track all primary surveillance targets within a geographic area defined by SA parameters. 3.1.2.2 The system must [STARS-012] automatically track all secondary surveillance targets within a geographic area defined by SA parameters.
3.2.1.1.2.33	3	STARS-SSD-00220	Track initiation, tentative track update, established track update, and track drop rules shall[3] be applied individually to each target processing volume.	3.1.2	3.1.2.1 The system must [STARS-011] automatically track all primary surveillance targets within a geographic area defined by SA parameters. 3.1.2.2 The system must [STARS-012] automatically track all secondary surveillance targets within a geographic area defined by SA parameters.
3.2.1.1.2.34	1	STARS-SSD-00221	If Mode S mode is active for an ASR-9 radar, then per-radar adapted Beacon Hit Count values shall[1] be used to determine whether a beacon-only or a radar-reinforced-beacon target is allowed to initiate a new or update a tentative beacon track.	3.1.2	3.1.2.1 The system must [STARS-011] automatically track all primary surveillance targets within a geographic area defined by SA parameters. 3.1.2.2 The system must [STARS-012] automatically track all secondary surveillance targets within a geographic area defined by SA parameters.

3.2.1.1.3	1	STARS-SSD-00222	A flight-plan associated tracked aircraft that is marked as subject to Arrival Auto-drop processing shall[1] be monitored for conflicts as if it was unassociated.	3.1.3	3.1.3.1 The system must [STARS-031] detect unsafe proximity between tracked aircraft pairs regardless of sensor origin.
3.2.1.1.3.1	1	STARS-SSD-00223	Conflicts shall[1] be detected for track pairs when the tracks' position data are generated from single or multiple surveillance sensors.	3.1.3	3.1.3.1 The system must [STARS-031] detect unsafe proximity between tracked aircraft pairs regardless of sensor origin.
3.2.1.1.3.2	1	STARS-SSD-00224	Look-ahead time for predicted conflicts shall[1] be adaptable up to a maximum of 120 seconds.	3.1.3	3.1.3.2 The system must [STARS-032] enable and disable CA processing for pairs of aircraft based upon pre-defined adaptation parameters.
3.2.1.1.3.3	1	STARS-SSD-00225	All conflict alert parameters that define separation and geographic criteria, as well as the lower boundary of an Approach Monitor Volume shall[1] be adaptable.	3.1.3	3.1.3.2 The system must [STARS-032] enable and disable CA processing for pairs of aircraft based upon pre-defined adaptation parameters.
3.2.1.1.3.3	3	STARS-SSD-00226	Adaptation shall[3] specify the safe vertical separation distance to be used by Conflict Alert Assigned Altitude Inhibit Processing for inhibiting conflicts between track pairs.	3.1.3	3.1.3.2 The system must [STARS-032] enable and disable CA processing for pairs of aircraft based upon pre-defined adaptation parameters.
3.2.1.1.3.3	5	STARS-SSD-00227	Conflict Alert Assigned Altitude Inhibit Processing shall[5] be enabled/disabled via adaptation.	3.1.3	3.1.3.2 The system must [STARS-032] enable and disable CA processing for pairs of aircraft based upon pre-defined adaptation parameters.
3.2.1.1.3.4	1	STARS-SSD-00228	Conflicts shall[1] be detected using current track position and altitude data.	3.1.3	3.1.3.1 The system must [STARS-031] detect unsafe proximity between tracked aircraft pairs regardless of sensor origin.
3.2.1.1.3.5	1	STARS-SSD-00229	Conflicts shall[1] be detected using predicted track position, assigned altitude, altitude, and altitude change rate data.	3.1.3	3.1.3.1 The system must [STARS-031] detect unsafe proximity between tracked aircraft pairs regardless of sensor origin.
3.2.1.1.3.5	2	STARS-SSD-00230	Predicted conflicts shall[2] be suppressed in Type I and Type II suppression zones and using assigned altitude with Conflict Alert Assigned Altitude Inhibit Processing based upon adaptation.	3.1.3	3.1.3.2 The system must [STARS-032] enable and disable CA processing for pairs of aircraft based upon pre-defined adaptation parameters.
3.2.1.1.3.6	1	STARS-SSD-00231	Conflicts shall[1] be detected for maneuvering aircraft using track position, track velocity, turn indication, altitude, assigned altitude, and altitude change rate data.	3.1.3	3.1.3.1 The system must [STARS-031] detect unsafe proximity between tracked aircraft pairs regardless of sensor origin.
3.2.1.1.3.7	1	STARS-SSD-00232	Conflicts shall[1] be detected between aircraft pairs on parallel approach in airport areas adapted for parallel runways.	3.1.3	3.1.3.1 The system must [STARS-031] detect unsafe proximity between tracked aircraft pairs regardless of sensor origin.
3.2.1.1.3.8	1	STARS-SSD-00233	Conflict alert parameters shall[1] be adaptable in three-dimensional geographic volumes.	3.1.3	3.1.3.2 The system must [STARS-032] enable and disable CA processing for pairs of aircraft based upon pre-defined adaptation parameters.

3.2.1.1.3.8	2	STARS-SSD-00234	Type I, II & III volumes shall[2] be adaptable with all remaining areas defaulted to Type III if non adapted and Type IV if at least one is adapted.	3.1.3	3.1.3.2 The system must [STARS-032] enable and disable CA processing for pairs of aircraft based upon pre-defined adaptation parameters.
3.2.1.1.3.8	4	STARS-SSD-00235	The following CA parameters shall[4] be separately adaptable for each of the four types of volume: a. Lateral positional tolerances b. Vertical positional tolerances c. Lateral separation thresholds d. Convergence thresholds e. Look ahead times (types I & II combined)	3.1.3	3.1.3.2 The system must [STARS-032] enable and disable CA processing for pairs of aircraft based upon pre-defined adaptation parameters.
3.2.1.1.3.8	5	STARS-SSD-00236	The separation parameters to be used for a pair of tracks shall[5] be selected based on their corresponding geographic volumes, with exception of both tracks being in Type I or II of different airports.	3.1.3	3.1.3.2 The system must [STARS-032] enable and disable CA processing for pairs of aircraft based upon pre-defined adaptation parameters.
3.2.1.1.3.9	1	STARS-SSD-00237	Detected conflicts shall[1] be made available for display.	3.1.3	3.1.3.8 The system must [STARS-038] display and store messages for each CA alert.
3.2.1.1.3.10	1	STARS-SSD-00238	Conflicts shall[1] be reported for an adapted minimum duration time.	3.1.3	3.1.3.2 The system must [STARS-032] enable and disable CA processing for pairs of aircraft based upon pre-defined adaptation parameters.
3.2.1.1.3.11	1	STARS-SSD-00239	Alert data for a conflict presented at multiple TCPs shall[1] be identical at all positions.	3.1.3	3.1.3.8 The system must [STARS-038] display and store messages for each CA alert.
3.2.1.1.3.12	1	STARS-SSD-00240	Reports of conflict alerts shall[1] be made available for ATC operational event display at the MCP.	3.1.3	3.1.3.8 The system must [STARS-038] display and store messages for each CA alert.
3.2.1.1.3.13	1	STARS-SSD-00241	Conflicts shall[1] be detected between Mode C altitude reporting aircraft track pairs where one or both tracks are associated and the Mode C altitude for both tracks is considered Stabilized.	3.1.3	3.1.3.1 The system must [STARS-031] detect unsafe proximity between tracked aircraft pairs regardless of sensor origin.
3.2.1.1.3.13	3	STARS-SSD-00242	A track pair with at least one associated track that is in a coasting state which concurrently has an active conflict alert shall[3] remain in alert until target reports are received which bring both tracks out of the coasting state and the track pair out of the alert condition.	3.1.3	3.1.3.5 The system must [STARS-035] enable and disable MCI alert processing for unassociated aircraft in conflict with an associated aircraft pair based upon pre-defined adaptation parameters.
3.2.1.1.3.13	7	STARS-SSD-00243	If at least one track of a pair is associated and laterally coasts out while a conflict alert condition exists, and the track(s) is(are) not in a filter adapted to inhibit freezing of tracks in conflict alert, the coasted out track(s) shall[7] be frozen at the last displayed position with the alert condition continuing to be displayed in the data blocks of both tracks and in the LA/CA/MCI list.	3.1.3	3.1.3.2 The system must [STARS-032] enable and disable CA processing for pairs of aircraft based upon pre-defined adaptation parameters. 3.1.3.5 The system must [STARS-035] enable and disable MCI alert processing for unassociated aircraft in conflict with an associated aircraft pair based upon pre-defined adaptation parameters.

3.2.1.1.3.13	9	STARS-SSD-00244	A conflict alert condition for an associated track pair or a frozen associated track of an associated/unassociated track pair shall[9] cease to be displayed if target reports are received that result in the track pair no longer being in a conflict alert condition.	3.1.3	3.1.3.1 The system must [STARS-031] detect unsafe proximity between tracked aircraft pairs regardless of sensor origin.
3.2.1.1.3.13	11	STARS-SSD-00245	Controller input to terminate a frozen track in conflict alert with another track shall[11] remove the terminated track from the display, and either continue to display the alert if the other track is also frozen or remove the alert if the other track is not frozen or previously been terminated.	3.1.3	3.1.3.2 The system must [STARS-032] enable and disable CA processing for pairs of aircraft based upon pre-defined adaptation parameters.
3.2.1.1.3.14	1	STARS-SSD-00246	If a suspended track goes into conflict, it shall[1] be unsuspended automatically.	3.1.3	3.1.3.2 The system must [STARS-032] enable and disable CA processing for pairs of aircraft based upon pre-defined adaptation parameters.
3.2.1.1.3.15	1	STARS-SSD-00247	An aural alarm shall[1] sound for a conflict violation on aircraft within an adaptable aural alarm geographic volume unless inhibited.	3.1.10	3.1.10.26 The system must [STARS-156] generate aural alarms based upon the adaptation of each individual TCP.
3.2.1.1.3.16	1	STARS-SSD-00248	The aural alarm shall[1] be inhibited or enabled for conflict violation on tracks in adaptable aural alarm control volumes satisfying the adaptable conditions associated with the volume.	3.1.10	3.1.10.26 The system must [STARS-156] generate aural alarms based upon the adaptation of each individual TCP.
3.2.1.1.3.17	1	STARS-SSD-00249	Reports of conflicts shall[1] be inhibited if each track is within an enabled and adaptable MASZ for this conflict type and both tracks qualify for the same or different zones.	3.1.3	3.1.3.2 The system must [STARS-032] enable and disable CA processing for pairs of aircraft based upon pre-defined adaptation parameters.

3.2.1.1.4.1	1	STARS-SSD-00250	The TAS shall[1] support an adaptable AMZ, with at least the following adaptable parameters for parallel approach runway configurations within the Terminal Area: a. Approach Course Orientation b. Boundary vertex points c. Vertical extent d. Runway end points e. Non Transgression Zone(s) (NTZ) f. Normal Operating Zones (NOZ) g. Approach Course Line length h. Departure Course Line length i. Lateral distance offset from approach course line to runway approach threshold j. Longitudinal distance offset from approach course line end point to runway approach threshold k. Visual elements as depicted in Figure 3.2.1.1.4-1.	3.1.4	3.1.4.1 The system must [STARS-051] detect unsafe proximity between tracked air¬craft pairs while on simultaneous approaches when using FMA. 3.1.4.3 The system must [STARS-053] detect unsafe proximity between a tracked air¬craft and the protected airspace associated with the arrival runway when using FMA. 3.1.4.5 The system must [STARS-055] provide for the adaptability of the FMA display mode.
3.2.1.1.4.1	5	STARS-SSD-00251	When an AMZ is activated in FMA mode, the adapted visual elements of the AMZ shall[5] be displayed.	3.1.4	3.1.4.5 The system must [STARS-055] provide for the adaptability of the FMA display mode.
3.2.1.1.4.2	1	STARS-SSD-00252	The location and dimensions of the NTZ shall[1] be adaptable, with default orientation such that it is aligned with the adapted approach course orientation.	3.1.4	3.1.4.5 The system must [STARS-055] provide for the adaptability of the FMA display mode.
3.2.1.1.4.2	2	STARS-SSD-00253	When FMA alert processing is enabled, the NTZ outline shall[2] be represented on the FMA display with a solid line in a color that indicates the current NTZ alert state.	3.1.4 3.1.10	3.1.4.3 The system must [STARS-053] detect unsafe proximity between a tracked aircraft and the protected airspace associated with the arrival runway when using FMA. 3.1.10.28 The system must [STARS-158] generate FMA visual alerts.
3.2.1.1.4.3	1	STARS-SSD-00254	The location and dimensions of the NOZ shall[1] be adaptable, with the default parameters such that it is a volume of airspace around the final approach course centerline and not a part of any enabled NTZ.	3.1.4	3.1.4.5 The system must [STARS-055] provide for the adaptability of the FMA display mode.
3.2.1.1.4.4	1	STARS-SSD-00255	A track shall[1] be eligible for monitoring by FMA when its last reported position is within an AMZ, unless FMA processing has been inhibited for that track or for all tracks.	3.1.2 3.1.4	3.1.2.8 The system must [STARS-018] provide tracking data for the Final Monitor Aid (FMA). 3.1.4.1 The system must [STARS-051] detect unsafe proximity between tracked air¬craft pairs while on simultaneous approaches when using FMA.

3.2.1.1.4.5	1	STARS-SSD-00256	For each eligible track, an FMA Warning alert shall[1] be generated when the corresponding aircraft enters an NTZ from the NOZ associated with its assigned runway.	3.1.4 3.1.10	3.1.4.3 The system must [STARS-053] detect unsafe proximity between a tracked air¬craft and the protected airspace associated with the arrival runway when using FMA. 3.1.10.28 The system must [STARS-158] generate FMA visual alerts. 3.1.10.29 The system must [STARS-159] generate FMA aural alerts.
3.2.1.1.4.6	1	STARS-SSD-00257	For each eligible track, an FMA Caution alert shall[1] be generated when the corresponding aircraft is predicted to enter an NTZ from the NOZ associated with its assigned runway.	3.1.4 3.1.10	3.1.4.3 The system must [STARS-053] detect unsafe proximity between a tracked air¬craft and the protected airspace associated with the arrival runway when using FMA. 3.1.10.28 The system must [STARS-158] generate FMA visual alerts. 3.1.10.29 The system must [STARS-159] generate FMA aural alerts.
3.2.1.1.4.7	1	STARS-SSD-00258	For each eligible track having an assigned runway corresponding to one of the AMZ parallel runways, an FMA Surveillance alert shall[1] be generated when the track has not correlated for an adaptable period of time.	3.1.10	3.1.10.28 The system must [STARS-158] generate FMA visual alerts. 3.1.10.29 The system must [STARS-159] generate FMA aural alerts.
3.2.1.1.4.8	1	STARS-SSD-00259	A track shall[1] be considered to be stabilized on approach to a runway when each of the following conditions are true, and remain true, for an adaptable length of time within a moving timeframe: a. The track's position is within the adapted FMA Approach Course Distance of the approach course center line of the runway. b. The track's heading is within the adapted FMA Approach Course Angle of the approach course heading of the runway.	3.1.4	3.1.4.3 The system must [STARS-053] detect unsafe proximity between a tracked aircraft and the protected airspace associated with the arrival runway when using FMA.

3.2.1.1.4.9	1	STARS-SSD-00260	For each eligible track, an FMA Runway alert shall[1] be generated when a track has been determined to be stabilized on an approach and the assigned runway for the aircraft is different, invalid, or not assigned.	3.1.4 3.1.10	3.1.4.3 The system must [STARS-053] detect unsafe proximity between a tracked aircraft and the protected airspace associated with the arrival runway when using FMA. 3.1.10.28 The system must [STARS-158] generate FMA visual alerts. 3.1.10.29 The system must [STARS-159] generate FMA aural alerts.
3.2.1.1.4.11	1	STARS-SSD-00261	FMA alerting shall[1] be enabled and inhibited by TCP input for an individual track, an individual TCW, or an individually designated NTZ of the active AMZ.	3.1.10	3.1.10.30 The system must [STARS-160] enable and disable FMA aural alerts at each TCP via manual entry.
3.2.1.1.4.12	1	STARS-SSD-00262	The FMA Active Monitored Zone shall[1] be selected by TCP input for each FMA-enabled TCW.	3.1.4	3.1.4.6 The system must [STARS-056] enable and disable FMA processing via manual entry.
3.2.1.1.4.13	1	STARS-SSD-00263	Reports of FMA alerts shall[1] be made available for ATC operational event display at the MCP.	3.1.4	3.1.4.7 The system must [STARS-057] display and store messages for all FMA alerts.
3.2.1.1.4.14	1	STARS-SSD-00264	When a track condition is such that multiple alert conditions apply, the single highest priority FMA alert shall[1] be indicated based upon the following list from highest to lowest: a. Warning b. Surveillance c. Runway d. Caution	3.1.10	3.1.10.28 The system must [STARS-158] generate FMA visual alerts.
3.2.1.1.4.16	1	STARS-SSD-00265	An arriving flight shall[1] be eligible for ARV monitoring when its track position is within an adapted ARV monitoring volume for a specified airport and runway based on site adapted criteria.	(Derived)	(Derived)
3.2.1.1.4.16	2	STARS-SSD-00266	TCP input shall[2] enable or inhibit ARV monitoring at a TCP or for a designated track	3.1.4	3.1.4.6 The system must [STARS-056] enable and disable FMA processing via manual entry.
3.2.1.1.4.16	3	STARS-SSD-00267	TCP input shall[3] toggle the status of a specified runway between open and closed.	3.1.4	3.1.4.6 The system must [STARS-056] enable and disable FMA processing via manual entry.

3.2.1.1.4.16	4	STARS-SSD-00268	The system shall[4] display an ARV caution alert or wrong surface alert for an eligible track at a TCP where ARV monitoring is enabled when any of the following conditions are true: a. An eligible track's destination airport does not match the airport associated with the ARV monitoring volume. b. An eligible track's assigned runway does not match any runway associated with the ARV monitoring volume. c. An eligible track with stabilized heading is aligned with a runway (associated with the ARV monitoring volume) that does not match its assigned runway. d. An eligible track with stabilized heading is not aligned with any runway (associated with the ARV monitoring volume).	(Derived)	(Derived)
3.2.1.1.4.16	5	STARS-SSD-00269	The system shall[5] display an ARV caution alert or wrong surface alert for an eligible track based on adapted distance criteria for how far the track has penetrated the ARV monitoring volume.	3.1.10	3.1.10.28 The system must [STARS-158] generate FMA visual alerts.
3.2.1.1.4.16	6	STARS-SSD-00270	The system shall[6] display an ARV closed runway alert for an eligible track at a TCP where ARV monitoring is enabled when any of the following conditions are true: a. An eligible track with stabilized heading is aligned with a closed runway (associated with the ARV monitoring volume).	3.1.10	3.1.10.28 The system must [STARS-158] generate FMA visual alerts.
3.2.1.1.4.16	7	STARS-SSD-00271	If adapted for the TCP, the system shall[7] generate an ARV aural alarm with an ARV alert.	3.1.10	3.1.10.29 The system must [STARS-159] generate FMA aural alerts.
3.2.1.1.4.16	8	STARS-SSD-00272	The system shall[8] force display of a full data block for a track in ARV alert.	3.1.10	3.1.10.11 The system must [STARS-141] display aircraft information in the form of data blocks. 3.1.10.28 The system must [STARS-158] generate FMA visual alerts.
3.2.1.1.4.16	9	STARS-SSD-00273	TCP input shall[9] acknowledge an ARV alert/alarm at the entering TCP only.	3.1.9	3.1.9.3 The system must [STARS-113] provide for controller manipulation of tracked aircraft status.
3.2.1.1.4.16	10	STARS-SSD-00274	The system shall[10] display a warning indication if an arrival flight is assigned to a closed runway.	3.1.10	3.1.10.28 The system must [STARS-158] generate FMA visual alerts.

3.2.1.1.5	1	STARS-SSD-00275	Tracked aircraft that are flight-plan associated and are not marked as subject to Arrival Auto-drop processing shall[1] be eligible for minimum safe altitude monitoring.	3.1.6	3.1.6.2 The system must [STARS-072] detect unsafe proximity between an associated tracked aircraft and the terrain map using valid altitude information from the altitude tracker, or from manually-entered assigned altitude when Mode-C data from the aircraft is not available.
3.2.1.1.5.1	1	STARS-SSD-00276	Mode C tracked aircraft shall[1] be monitored for conflict with terrain and obstructions.	3.1.6	3.1.6.2 The system must [STARS-072] detect unsafe proximity between an associated tracked aircraft and the terrain map using valid altitude information from the altitude tracker, or from manually entered assigned altitude when Mode-C data from the aircraft is not available
3.2.1.1.5.1	2	STARS-SSD-00277	The altitude data used by the MSAW function shall[2] be generated from the Stabilized Mode C reported altitude or from the manually-entered pilot altitude when Stabilized Mode C data from the aircraft is not available.	3.1.6	3.1.6.2 The system must [STARS-072] detect unsafe proximity between an associated tracked aircraft and the terrain map using valid altitude information from the altitude tracker, or from manually entered assigned altitude when Mode-C data from the aircraft is not available
3.2.1.1.5.1	5	STARS-SSD-00278	A vertical or lateral coasting track that was in MSAW alert before coasting began, or enters MSAW alert while coasting, shall[5] remain in alert until a target report is received which brings the track out of the alert condition.	3.1.6 3.1.10	3.1.6.2 The system must [STARS-072] detect unsafe proximity between an associated tracked aircraft and the terrain map using valid altitude information from the altitude tracker, or from manually entered assigned altitude when Mode-C data from the aircraft is not available. 3.1.10.33 The system must [STARS-163] generate MSAW visual alerts.
3.2.1.1.5.1	6	STARS-SSD-00279	If a track that is currently in MSAW alert laterally coasts out, and is not in a filter adapted to inhibit freezing of tracks in MSAW alert, the track shall[6] freeze on the display with the alert condition continuing to be displayed in the data block and in the LA/CA list until either a target report is received which correlates with the track and brings the track out of the alert condition, or the track is terminated by controller input. If the track vertically coasts out and the track is not currently in lateral coast, the alert will cease.	3.1.6 3.1.10	3.1.6.2 The system must [STARS-072] detect unsafe proximity between an associated tracked aircraft and the terrain map using valid altitude information from the altitude tracker, or from manually entered assigned altitude when Mode-C data from the aircraft is not available. 3.1.10.33 The system must [STARS-163] generate MSAW visual alerts.

3.2.1.1.5.2	1	STARS-SSD-00280	Tracked aircraft shall[1] be monitored along a two-segment path using the track's smoothed altitude, limited to an adaptable tolerance of the reported Mode C altitude that is pressure corrected and predicted altitude, to compute a vertical profile and compare the profile against an adapted terrain map.	3.1.6	3.1.6.2 The system must [STARS-072] detect unsafe proximity between an associated tracked aircraft and the terrain map using valid altitude information from the altitude tracker, or from manually entered assigned altitude when Mode-C data from the aircraft is not available
3.2.1.1.5.3	1	STARS-SSD-00281	The first segment shall[1] begin at the track's current position and extend to a position predicted using the track's estimated altitude change rate and an adapted time parameter.	3.1.6	3.1.6.2 The system must [STARS-072] detect unsafe proximity between an associated tracked aircraft and the terrain map using valid altitude information from the altitude tracker, or from manually entered assigned altitude when Mode-C data from the aircraft is not available
3.2.1.1.5.4	1	STARS-SSD-00282	The second segment shall[1] begin at the end of the first segment, extend to the altitude of the highest terrain or to an adapted time parameter, whichever occurs first and project the track's altitude using the greater of either the current vertical velocity, or an adapted climb angle.	3.1.6	3.1.6.2 The system must [STARS-072] detect unsafe proximity between an associated tracked aircraft and the terrain map using valid altitude information from the altitude tracker, or from manually entered assigned altitude when Mode-C data from the aircraft is not available
3.2.1.1.5.5	1	STARS-SSD-00283	The resolution of the terrain map shall[1] be adaptable to 0.5, 1 nmi, or 2 nmi.	3.1.6	3.1.6.1 The system must [STARS-071] provide an adaptable Terrain Map to identify the minimum acceptable altitude, based upon elevation and obstructions, in a grid design with granularity as low as .5 nmi per square.
3.2.1.1.5.6	1	STARS-SSD-00284	The source of terrain map data shall[1] be a grid of government furnished elevation data oriented to true north with x-y offsets referenced to a site specific lat/long location as defined by the SIFA.	3.1.6	3.1.6.1 The system must [STARS-071] provide an adaptable Terrain Map to identify the minimum acceptable altitude, based upon elevation and obstructions, in a grid design with granularity as low as .5 nmi per square.
3.2.1.1.5.7	1	STARS-SSD-00285	Tracked aircraft smoothed altitude, limited to an adaptable tolerance of the reported Mode C altitude that is pressure corrected, shall[1] be monitored for conflict with terrain or obstructions along adaptable approach paths.	3.1.6	3.1.6.2 The system must [STARS-072] detect unsafe proximity between an associated tracked aircraft and the terrain map using valid altitude information from the altitude tracker, or from manually entered assigned altitude when Mode-C data from the aircraft is not available
3.2.1.1.5.8	1	STARS-SSD-00286	On adaptable approach paths, tracked aircraft smoothed altitude, limited to an adaptable tolerance of the reported Mode C altitude that is pressure corrected, shall[1] be monitored for both descent below and predicted decent below an adaptable slope defining current altitude violations.	3.1.6	3.1.6.2 The system must [STARS-072] detect unsafe proximity between an associated tracked aircraft and the terrain map using valid altitude information from the altitude tracker, or from manually entered assigned altitude when Mode-C data from the aircraft is not available

3.2.1.1.5.8	2	STARS-SSD-00287	A flight shall[2] be processed for approach monitor alerts from its current position to its position at the adapted look-ahead time, taking into account all monitor volumes on this path.	3.1.6	3.1.6.2 The system must [STARS-072] detect unsafe proximity between an associated tracked aircraft and the terrain map using valid altitude information from the altitude tracker, or from manually entered assigned altitude when Mode-C data from the aircraft is not available
3.2.1.1.5.8	3	STARS-SSD-00288	Each adaptable monitor volume shall[3] be comprised of a Type I or Type II Airport Volume, or both.	3.1.6	3.1.6.2 The system must [STARS-072] detect unsafe proximity between an associated tracked aircraft and the terrain map using valid altitude information from the altitude tracker, or from manually entered assigned altitude when Mode-C data from the aircraft is not available
3.2.1.1.5.9	1	STARS-SSD-00289	An aural alarm shall[1] sound for a low altitude violation on associated aircraft within an adaptable geographic volume unless inhibited.	3.1.10	3.1.10.34 The system must [STARS-164] generate MSAW aural alarms.
3.2.1.1.5.10	1	STARS-SSD-00290	The aural alarm shall[1] be inhibited or enabled for low altitude violation on tracks in adaptable aural alarm control volumes satisfying adaptable conditions associated with the volume.	3.1.10	3.1.10.35 The system must [STARS-165] enable and disable MSAW aural alarms at each TCP via manual entry.
3.2.1.1.5.11	1	STARS-SSD-00291	Reports of low altitude violations shall[1] be inhibited for tracks within an adaptable geographic volume.	3.1.6	3.1.6.3 The system must [STARS-073] enable and disable Minimum Safe Altitude Warning (MSAW) processing for individual aircraft via manual entry.
3.2.1.1.5.12	1	STARS-SSD-00292	Tracked departure aircraft in an adaptable departure inhibit geographic volume shall[1] be suppressed from MSAW alert display if they are departures from the associated airport.	3.1.6	3.1.6.3 The system must [STARS-073] enable and disable Minimum Safe Altitude Warning (MSAW) processing for individual aircraft via manual entry.
3.2.1.1.5.13	1	STARS-SSD-00293	Reports of low altitude violations shall[1] be made available for display.	3.1.6	3.1.6.5 The system must [STARS-075] display, and store messages for each MSAW alert.
3.2.1.1.5.14	1	STARS-SSD-00294	Low altitude alerts displayed at multiple TCPs shall[1] be identical at all positions.	3.1.10	3.1.10.33 The system must [STARS-163] generate MSAW visual alerts.
3.2.1.1.5.15	1	STARS-SSD-00295	Once a low altitude alert has been displayed at a TCP, it shall[1] remain until the violation condition ceases.	3.1.10	3.1.10.33 The system must [STARS-163] generate MSAW visual alerts.
3.2.1.1.5.16	1	STARS-SSD-00296	An alert shall[1] persist for an adapted minimum time duration.	3.1.10	3.1.10.33 The system must [STARS-163] generate MSAW visual alerts. 3.1.10.34 The system must [STARS-164] generate MSAW aural alarms.
3.2.1.1.5.17	1	STARS-SSD-00297	Reports of low altitude violations shall[1] be inhibited for tracked aircraft with an adaptable beacon code, code segment or code block.	3.1.6	3.1.6.3 The system must [STARS-073] enable and disable Minimum Safe Altitude Warning (MSAW) processing for individual aircraft via manual entry.

3.2.1.1.5.18	1	STARS-SSD-00298	Reports of low altitude violations shall[1] be made available for ATC operational event display at the MCP.	3.1.6	3.1.6.5 The system must [STARS-075] display, and store messages for each MSAW alert.
3.2.1.1.5.19	1	STARS-SSD-00299	If a suspended track goes into low altitude violation, it shall[1] be unsuspended automatically.	3.1.6	3.1.6.2 The system must [STARS-072] detect unsafe proximity between an associated tracked aircraft and the terrain map using valid altitude information from the altitude tracker, or from manually entered assigned altitude when Mode-C data from the aircraft is not available
3.2.1.1.5.20	1	STARS-SSD-00300	Reports of low altitude violations shall[1] be inhibited if the track qualifies for an enabled MASZ that is adapted for MSAW.	3.1.6	3.1.6.3 The system must [STARS-073] enable and disable Minimum Safe Altitude Warning (MSAW) processing for individual aircraft via manual entry.
3.2.1.1.6.1	1	STARS-SSD-00301	The target reference line shall[1] be an adaptable vector that has its origin at the adaptable target reference point and is associated with a specific qualification region.	3.1.5	3.1.5.2 The system must [STARS-062] enable and disable Converging Runway Display Aid (CRDA) processing for aircraft on approach to a pair of converging runways based on adaptation.
3.2.1.1.6.2	1	STARS-SSD-00302	The image reference line shall[1] be an adaptable vector that has its origin at the adaptable image reference point and is associated with a specific qualification region.	3.1.5	3.1.5.2 The system must [STARS-062] enable and disable Converging Runway Display Aid (CRDA) processing for aircraft on approach to a pair of converging runways based on adaptation.
3.2.1.1.6.3	1	STARS-SSD-00303	The qualification region shall[1] be an adaptable region defined by a horizontal polygon.	3.1.5	3.1.5.2 The system must [STARS-062] enable and disable Converging Runway Display Aid (CRDA) processing for aircraft on approach to a pair of converging runways based on adaptation.
3.2.1.1.6.3	2	STARS-SSD-00304	The altitude of the qualification region shall[2] be bounded by either adapted constant altitudes or adapted distances parallel to the glideslope.	3.1.5	3.1.5.2 The system must [STARS-062] enable and disable Converging Runway Display Aid (CRDA) processing for aircraft on approach to a pair of converging runways based on adaptation.
3.2.1.1.6.4	1	STARS-SSD-00305	An application shall[1] include two qualification regions along with the associated target reference points and lines, and the associated image reference points and lines.	3.1.5	3.1.5.1 The system must [STARS-061] provide a ghost data block to project one aircraft landing on a crossing runway to the other aircraft.
3.2.1.1.6.5	1	STARS-SSD-00306	A track shall[1] be eligible for CRDA when it is within an active qualification region and either its heading, data field values, or positions at the TCP equal values set in adaptation.	3.1.5	3.1.5.2 The system must [STARS-062] enable and disable Converging Runway Display Aid (CRDA) processing for aircraft on approach to a pair of converging runways based on adaptation.

3.2.1.1.6.6	1	STARS-SSD-00307	The ghost target shall[1] be located in stagger or tie mode such that the distance of the ghost target to the image reference point along the image reference line equals the distance of the actual target to that same point or that same distance plus an adaptable distance respectively.	3.1.5	3.1.5.1 The system must [STARS-061] provide a ghost data block to project one aircraft landing on a crossing runway to the other aircraft.
3.2.1.1.6.7	1	STARS-SSD-00308	The ghost target shall[1] be located such that the lateral relationship of the ghost target to the image reference line is the same as the relationship of the actual target to the target reference line.	3.1.5	3.1.5.1 The system must [STARS-061] provide a ghost data block to project one aircraft landing on a crossing runway to the other aircraft.
3.2.1.1.6.8	1	STARS-SSD-00309	Up to three data block or flight plan fields shall[1] be adapted to qualify track eligibility or exclusion for CRDA ghost generation.	3.1.5	3.1.5.2 The system must [STARS-062] enable and disable Converging Runway Display Aid (CRDA) processing for aircraft on approach to a pair of converging runways based on adaptation.
3.2.1.1.6.9	1	STARS-SSD-00310	CRDA shall[1] be enabled and disabled on command for each individual TCP.	3.1.5	3.1.5.3 The system must [STARS-063] enable and disable CRDA for each TCP via manual entry.
3.2.1.1.6.10	1	STARS-SSD-00311	Each individual qualification region within an application shall[1] be activated and deactivated independently on command for each enabled TCP.	3.1.5	3.1.5.3 The system must [STARS-063] enable and disable CRDA for each TCP via manual entry.
3.2.1.1.6.11	1	STARS-SSD-00312	The display of a ghost target shall[1] include a leader line, an adaptable data block, and a position symbol separately adaptable for each CRDA application.	3.1.5	3.1.5.1 The system must [STARS-061] provide a ghost data block to project one aircraft landing on a crossing runway to the other aircraft.
3.2.1.1.7.1	1	STARS-SSD-00313	System adaptation shall[1] specify the weight classes with their corresponding aircraft category and default landing speed as specified below:	3.1.2	3.1.2.10 The system must [STARS-020] provide tracking data for the Automatic Terminal Proximity Alert (ATPA).
3.2.1.1.7.1	2	STARS-SSD-00314	Site adaptation shall[2] optionally specify adaptable parameters such as, but not limited to, those listed below: a. Aircraft Category for a Small and/or Large weight classes b. Default Landing Speed for each weight class c. Weight Class, Exception landing speed and indicator for High Performance Turbo-prop per aircraft type d. Minimum track ground speed to update current landing speed offset e. Enable/Disable ATPA system wide f. Enable/Disable ATPA Approach Volume per configuration g. ACID's and Beacon Codes associated to ATPA and Distance Exclusions	3.1.10	3.1.10.12 The system must [STARS-142] allow each site to define the content of data blocks in site adaptation.

3.2.1.1.7.1	10	STARS-SSD-00315	Site adaptation shall[10] support a number of ATPA Approach Volumes each of which is defined by, but not limited by the following: a. A rectangular area with floor and ceiling altitude b. A magnetic approach heading c. Track Heading tolerance d. Enable/Disable 2.5 nm Reduced Separation e. Distance from the Runway Threshold for 2.5 nm Reduced Separation f. ATPA Cone ineligibility parameters g. ATPA Exclusion and Inclusion parameters h. Controller positions to display ATPA data i. Landing Speed Offset, Group Name, and time for reset j. Indicator that VFR flights are eligible for the volume	3.1.2	3.1.2.10 The system must [STARS-020] provide tracking data for the Automatic Terminal Proximity Alert (ATPA).
3.2.1.1.7.1	12	STARS-SSD-00316	A track shall[12] be considered within an ATPA Approach Volume when all of the following conditions are true: a. The track has been enabled via TCP entry to override ATPA qualification processing; or ACID/beacon code not excluded, track has an established altitude and the track has IFR, VFR on top or VFR status when in an adapted volume. b. The track is not owned by the center or another facility c. The track satisfies ATPA Inclusion and Exclusion parameters d. The track position is laterally and vertically within that Approach Volume e. The track is not frozen or coasting f. The track is not a ghost, pseudo track, or unsupported track g. The track is associated and not marked as subject to Arrival Auto-drop processing.	3.1.2	3.1.2.10 The system must [STARS-020] provide tracking data for the Automatic Terminal Proximity Alert (ATPA).
3.2.1.1.7.1	13	STARS-SSD-00317	A track shall[13] qualify for ATPA Cone processing if ATPA is enabled and the track is in an enabled Approach Volume.	3.1.2	3.1.2.10 The system must [STARS-020] provide tracking data for the Automatic Terminal Proximity Alert (ATPA).

3.2.1.1.7.1	14	STARS-SSD-00318	An ATPA In-Trail track pair shall[14] be determined for a trailing track and the closest lead track that meet the following criteria: a. Both tracks qualify for ATPA Cone Processing in the same Approach Volume b. The lead track is within 12 nmi of the trailing track c. The lead track is +/- 90° from the heading of the trailing track. d. Neither track is displaying "TRK" in the owner's data block.	3.1.2	3.1.2.10 The system must [STARS-020] provide tracking data for the Automatic Terminal Proximity Alert (ATPA).
3.2.1.1.7.1	15	STARS-SSD-00319	Site adaptation shall[15] specify the ATPA separation minimum using the weight classes of the In-Trail track pair.	3.1.2	3.1.2.10 The system must [STARS-020] provide tracking data for the Automatic Terminal Proximity Alert (ATPA).
3.2.1.1.7.1	16	STARS-SSD-00320	If a track that qualifies for ATPA Cone Processing does not have a valid weight class, then the track shall[16] be eligible to display an indication that a weight class is unavailable.	3.1.2	3.1.2.10 The system must [STARS-020] provide tracking data for the Automatic Terminal Proximity Alert (ATPA).
3.2.1.1.7.1	17	STARS-SSD-00321	The ATPA separation minimum for an In-Trail track pair shall[17] be set to the adapted separation minimum applicable to the weight classes / wake categories of the two tracks for the IFR Separation Category with the highest priority whose conditions are met as specified in table 3.2.1.1.7-2 plus any additional separation if adapted for formation separation and either track is a formation flight.	3.1.2	3.1.2.10 The system must [STARS-020] provide tracking data for the Automatic Terminal Proximity Alert (ATPA).
3.2.1.1.7.1	21	STARS-SSD-00322	The radius of a TPA cone on a trailing track shall[21] be changed to the current ATPA In-Trail separation minimum when the trailing track's TCP is eligible for ATPA and the current ATPA In-Trail separation minimum is greater than the TPA cone radius .	3.1.2	3.1.2.10 The system must [STARS-020] provide tracking data for the Automatic Terminal Proximity Alert (ATPA).
3.2.1.1.7.1	22	STARS-SSD-00323	A TPA J-ring shall[22] continue to be displayed when an ATPA Monitor Cone, ATPA Warning Cone or ATPA Alert Cone is displayed.	3.1.10	3.1.10.25 The system must [STARS-155] generate visual alerts based upon the adaptation of each individual facility.

3.2.1.1.7.1	23	STARS-SSD-00324	An ATPA Monitor Cone shall[23] be eligible for display in the TPA color for a trailing track qualifying for ATPA Cone processing as long as the following conditions are met: a. The In-Trail track pair has a current ATPA separation minimum b. The track is not displaying a TPA Cone or an ATPA Warning or Alert Cone c. The track is not displaying In-Trail Distance in the Caution color or ATPA Alert color.	3.1.2 3.1.10	3.1.2.10 The system must [STARS-020] provide tracking data for the Automatic Terminal Proximity Alert (ATPA). 3.1.10.25 The system must [STARS-155] generate visual alerts based upon the adaptation of each individual facility.
3.2.1.1.7.1	24	STARS-SSD-00325	The display of a TPA Cone shall[24] be inhibited when the track is displaying an ATPA Warning or Alert Cone, or is displaying an ATPA In-Trail Warning or Alert condition.	3.1.10	3.1.10.25 The system must [STARS-155] generate visual alerts based upon the adaptation of each individual facility.
3.2.1.1.7.1	26	STARS-SSD-00326	A trailing track that qualifies for ATPA Cone processing shall[26] be eligible for an ATPA In-Trail Warning condition when the predicted difference in distance between the two tracks within the ATPA Warning Look-ahead time is less than or equal to the separation minimum.	3.1.2	3.1.2.10 The system must [STARS-020] provide tracking data for the Automatic Terminal Proximity Alert (ATPA).
3.2.1.1.7.1	27	STARS-SSD-00327	An ATPA Warning Cone or Alert Cone shall[27] be displayed in the Caution color or Alert Color respectively for a track in an ATPA In-Trail Warning condition when the display of ATPA Warning and Alert Cones is enabled.	3.1.10	3.1.10.25 The system must [STARS-155] generate visual alerts based upon the adaptation of each individual facility.
3.2.1.1.7.1	28	STARS-SSD-00328	The ATPA Warning Cone shall[28] be displayed for a minimum period of time specified by a site-adapted value unless it is replaced by an ATPA Alert Cone or no longer qualifies for ATPA Cone processing.	3.1.10	3.1.10.25 The system must [STARS-155] generate visual alerts based upon the adaptation of each individual facility.
3.2.1.1.7.1	29	STARS-SSD-00329	A trailing track that qualifies for ATPA Cone processing shall[29] be eligible for an ATPA In-Trail Alert condition when the difference in distance between the two tracks is less than or equal to the separation minimum or is predicted to be so within the ATPA Alert Cone Look-ahead time.	3.1.10	3.1.10.25 The system must [STARS-155] generate visual alerts based upon the adaptation of each individual facility.
3.2.1.1.7.1	31	STARS-SSD-00330	The ATPA data shall[31] be updated at each display based on the display's update rate.	3.1.10	3.1.10.25 The system must [STARS-155] generate visual alerts based upon the adaptation of each individual facility.

3.2.1.1.7.1	32	STARS-SSD-00331	The predicted location of a track for purposes of ATPA Warning Cone and ATPA Alert Cone processing shall[32] use the track's current location, its current ground speed, and its predicted Landing Speed.	3.1.2	3.1.2.10 The system must [STARS-020] provide tracking data for the Automatic Terminal Proximity Alert (ATPA).
3.2.1.1.7.1	33	STARS-SSD-00332	Unless it is suspended, a track shall[33] display a FDB when the track is displaying a Warning/Alert Cone or In-Trail Warning/Alert condition.	3.1.10	3.1.10.25 The system must [STARS-155] generate visual alerts based upon the adaptation of each individual facility.
3.2.1.1.7.1	34	STARS-SSD-00333	The ATPA Monitor, Warning or Alert Cone shall[34] be drawn as a circular sector with the origin at the trailing track position, a radius equal to the ATPA separation minimum for the track pair and the center of the arc oriented toward the location of the lead track.	3.1.10	3.1.10.25 The system must [STARS-155] generate visual alerts based upon the adaptation of each individual facility.
3.2.1.1.7.1	35	STARS-SSD-00334	A track shall[35] qualify for ATPA In-Trail Distance processing if ATPA is enabled in the system and the track is in an enabled Approach Volume.	3.1.2	3.1.2.10 The system must [STARS-020] provide tracking data for the Automatic Terminal Proximity Alert (ATPA).
3.2.1.1.7.1	36	STARS-SSD-00335	The display status of ATPA Monitor, Warning and Alert Cones as well as In-Trail Distance for a track shall[36] be set to the current state for the TCP when the track no longer qualifies for an enabled ATPA Approach Volume for which it was qualified.	3.1.10	3.1.10.25 The system must [STARS-155] generate visual alerts based upon the adaptation of each individual facility.
3.2.1.1.7.1	39	STARS-SSD-00336	The Override of ATPA qualification processing conditions shall[39] be cleared when the track no longer qualifies for an ATPA Approach Volume for which it was qualified.	3.1.2	3.1.2.10 The system must [STARS-020] provide tracking data for the Automatic Terminal Proximity Alert (ATPA).
3.2.1.1.7.2	1	STARS-SSD-00337	Site adaptation shall[1] specify if TSAS is enabled or disabled system-wide.	(Derived)	(Derived)
3.2.1.1.7.2	2	STARS-SSD-00338	TSAS system events shall[2] be displayed at the MCW and recorded in the STARS message log.	3.1.11	3.1.11.3 The system must [STARS-173] record all data necessary to recreate system status, performance, environment, and situation displays.
3.2.1.1.7.2	3	STARS-SSD-00339	Display of TSAS data for an individual position or flight shall[3] be controlled by TCP command.	3.1.9 3.1.10	3.1.9.5 The system must [STARS-115] provide a controller with the ability to manipulate the pre-sentation of information on an individual situation display. 3.1.10.10 The system must [STARS-140] display flight plan information at each TCP.

3.2.1.1.7.2	4	STARS-SSD-00340	TSAS data for a flight shall[4] be removed from display when the flight is qualified for an adapted Volume that is adapted to inhibit display of TSAS tools, and deleted from the system when no update from TBFM has been received for an adapted period of time.	3.1.9	3.1.9.5 The system must [STARS-115] provide a controller with the ability to manipulate the pre-sentation of information on an individual situation display.
3.2.1.1.7.2	5	STARS-SSD-00341	Non-Timeline TSAS tools and data for a flight shall[5] be removed from display when TBFM indicates they are invalid or RNP capability has been manually overridden.	3.1.9	3.1.9.5 The system must [STARS-115] provide a controller with the ability to manipulate the pre-sentation of information on an individual situation display.
3.2.1.1.7.2.1	1	STARS-SSD-00342	The slot marker for a flight shall[1] be eligible for display in fused track display mode based on its TBFM-reported position, heading, and groundspeed, updated in synchronization with track updates.	3.1.10	3.1.10.10 The system must [STARS-140] display flight plan information at each TCP.
3.2.1.1.7.2.1	2	STARS-SSD-00343	When displayed, a slot marker airspeed shall[2] be positioned adjacent to the corresponding track's slot marker.	3.1.10	3.1.10.10 The system must [STARS-140] display flight plan information at each TCP.
3.2.1.1.7.2.1	3	STARS-SSD-00344	When a slot marker is displayed for a flight for which TBFM reports a manually overridden PBN capability, the slot marker shall[3] be displayed in an adaptable emphasis color.	3.1.10	3.1.10.10 The system must [STARS-140] display flight plan information at each TCP.
3.2.1.1.7.2.1	4	STARS-SSD-00345	When eligible for display, a slot marker and slot marker airspeed shall[4] be displayed for flights with a full data block.	3.1.10	3.1.10.10 The system must [STARS-140] display flight plan information at each TCP. 3.1.10.11 The system must [STARS-141] display aircraft information in the form of data blocks.
3.2.1.1.7.2.1	5	STARS-SSD-00346	When eligible for display, a slot marker shall[5] be displayed when a flight with a partial data block is in Dwell state.	3.1.10	3.1.10.10 The system must [STARS-140] display flight plan information at each TCP. 3.1.10.11 The system must [STARS-141] display aircraft information in the form of data blocks.
3.2.1.1.7.2.2	1	STARS-SSD-00347	The trajectory for a flight shall[1] be displayed graphically with estimated and scheduled trajectory information, and toggled on or off based on TCP entry.	3.1.9 3.1.10	3.1.9.5 The system must [STARS-115] provide a controller with the ability to manipulate the pre-sentation of information on an individual situation display. 3.1.10.10 The system must [STARS-140] display flight plan information at each TCP.

3.2.1.1.7.2.3	1	STARS-SSD-00348	TCP input shall[1] toggle on and off the display of the track's TBFM reported airspeed.	3.1.9 3.1.10	3.1.9.5 The system must [STARS-115] provide a controller with the ability to manipulate the pre-sentation of information on an individual situation display. 3.1.10.10 The system must [STARS-140] display flight plan information at each TCP.
3.2.1.1.7.2.3	2	STARS-SSD-00349	When displayed, TBFM reported airspeed shall[2] be positioned adjacent to the corresponding track's position symbol.	3.1.10	3.1.10.10 The system must [STARS-140] display flight plan information at each TCP.
3.2.1.1.7.2.4	1	STARS-SSD-00350	TCP input shall[1] toggle on and off the display of a Timeline window that shows a sequence of flights scheduled to arrive at a specified adapted fix or runway, and the times it will take those flights to arrive.	3.1.9 3.1.10	3.1.9.5 The system must [STARS-115] provide a controller with the ability to manipulate the pre-sentation of information on an individual situation display. 3.1.10.10 The system must [STARS-140] display flight plan information at each TCP.
3.2.1.1.7.2.4	2	STARS-SSD-00351	While a track is in a Dwell State, a spacing bracket shall[2] be displayed for the corresponding flight in the Timeline windows.	3.1.10	3.1.10.10 The system must [STARS-140] display flight plan information at each TCP.
3.2.1.1.7.2.5	1	STARS-SSD-00352	When TSAS tools are available for a flight, and a TCP performs an action to change the RNP eligibility for that flight, the system shall[1] issue an Event Notification message to TBFM indicating the desired RNP eligibility change.	3.1.9	3.1.9.4 The system must [STARS-114] provide the controller with control over flight plan information.
3.2.1.1.7.2.6	1	STARS-SSD-00353	When a TCP performs an action to resequence a series of flights with available TSAS tools, the system shall[1] issue an Event Notification message to TBFM indicating the desired sequence change.	3.1.9	3.1.9.4 The system must [STARS-114] provide the controller with control over flight plan information.
3.2.1.1.7.2.6	2	STARS-SSD-00354	When a TCP performs an action to swap the sequence of two flights with available TSAS tools, the system shall[2] issue an Event Notification message to TBFM indicating the desired sequence swap.	3.1.9	3.1.9.4 The system must [STARS-114] provide the controller with control over flight plan information.
3.2.1.1.7.2.6	3	STARS-SSD-00355	TCP input to modify the TSAS sequence data of a flight that is not controlled by the TCP shall[3] be indicated at the flight owner's display.	3.1.9 3.1.10	3.1.9.4 The system must [STARS-114] provide the controller with control over flight plan information. 3.1.10.9 The system must [STARS-139] display aircraft status at each TCP.

3.2.1.1.7.2.7	1	STARS-SSD-00356	If as a result of TCP input, the assigned runway for a flight with available TSAS tools no longer matches the runway supplied by TBFM, the system shall[1] issue an Event Notification message to TBFM indicating the Manual Runway change.	3.1.9	3.1.9.4 The system must [STARS-114] provide the controller with control over flight plan information.
3.2.1.1.8.1	1	STARS-SSD-00357	A TCID number shall[1] be assigned to received interfacility flight plans and TCP-entered VFR interfacility flight plans.	3.1.7	3.1.7.2 The system must [STARS-082] process Arrival, Departure, and Overflight Flight Plans generated internally by an adjacent Terminal facility. 3.1.7.3 The system must [STARS-083] process Arrival, Departure, and Overflight Flight Plans generated internally by an ARTCC.
3.2.1.1.8.1	3	STARS-SSD-00358	The system shall[3] accept and process received messages from adjacent TRACONs with a TCID in either adapted format.	3.1.7	3.1.7.2 The system must [STARS-082] process Arrival, Departure, and Overflight Flight Plans generated internally by an adjacent Terminal facility.
3.2.1.1.8.2	1	STARS-SSD-00359	At least four adaptable banks of beacon codes, each containing an optional character for flight rules and a prioritized list of alternate banks shall[1] be available for assignment to intrafacility flight plans.	3.1.7	3.1.7.2 The system must [STARS-082] process Arrival, Departure, and Overflight Flight Plans generated internally by an adjacent Terminal facility. 3.1.7.3 The system must [STARS-083] process Arrival, Departure, and Overflight Flight Plans generated internally by an ARTCC.
3.2.1.1.8.3	1	STARS-SSD-00360	When the Estimated Time of Arrival (ETA) or Proposed Time of Departure (PTD) is not provided with flight data entered at the TCP, the current system time shall[1] be assigned as the ETA or PTD.	3.1.7	3.1.7.2 The system must [STARS-082] process Arrival, Departure, and Overflight Flight Plans generated internally by an adjacent Terminal facility. 3.1.7.3 The system must [STARS-083] process Arrival, Departure, and Overflight Flight Plans generated internally by an ARTCC.
3.2.1.1.8.4	1	STARS-SSD-00361	Default values for flight data, such as entry/exit fixes and flight type shall[1] be assigned to a flight plan based on owning or entering TCP when the default value does not conflict with manually entered data.	3.1.7	3.1.7.2 The system must [STARS-082] process Arrival, Departure, and Overflight Flight Plans generated internally by an adjacent Terminal facility. 3.1.7.3 The system must [STARS-083] process Arrival, Departure, and Overflight Flight Plans generated internally by an ARTCC.

3.2.1.1.8.5	1	STARS-SSD-00362	When a flight plan is entered with a TCP specified, the flight plan shall[1] be assigned to that TCP or, if fully or basically consolidated, to the position that the specified position is consolidated to.	3.1.7	3.1.7.2 The system must [STARS-082] process Arrival, Departure, and Overflight Flight Plans generated internally by an adjacent Terminal facility. 3.1.7.3 The system must [STARS-083] process Arrival, Departure, and Overflight Flight Plans generated internally by an ARTCC.
3.2.1.1.8.6	1	STARS-SSD-00363	When a flight plan is entered with no TCP is specified and no fix data is explicitly entered, the entering TCP shall[1] be assigned the flight plan unless the entering position is consolidated in which case the rules of consolidation apply.	3.1.9	3.1.9.4 The system must [STARS-114] provide the controller with control over flight plan information.
3.2.1.1.8.6	4	STARS-SSD-00364	For a flight plan entered at the TCP using the non-implied form of the command, when no TCP is specified and both fixes are explicitly entered, the TCP to which the flight plan is assigned shall[4] be obtained from the current configuration plan.	3.1.9	3.1.9.4 The system must [STARS-114] provide the controller with control over flight plan information.
3.2.1.1.8.7	1	STARS-SSD-00365	The TCP to receive a flight plan shall[1] be determined by matching field elements in the Flight Plan message, selected via adaptation, to corresponding parameters that define current configuration and current consolidation.	3.1.7	3.1.7.2 The system must [STARS-082] process Arrival, Departure, and Overflight Flight Plans generated internally by an adjacent Terminal facility. 3.1.7.3 The system must [STARS-083] process Arrival, Departure, and Overflight Flight Plans generated internally by an ARTCC.
3.2.1.1.8.7	2	STARS-SSD-00366	The matching field elements, at a minimum, shall[2] include altitude band(s), A/C type(s), Aircraft ID and Runway with corresponding alternative TCP assignments.	3.1.7	3.1.7.2 The system must [STARS-082] process Arrival, Departure, and Overflight Flight Plans generated internally by an adjacent Terminal facility. 3.1.7.3 The system must [STARS-083] process Arrival, Departure, and Overflight Flight Plans generated internally by an ARTCC.
3.2.1.1.8.8	1	STARS-SSD-00367	Separate flight plans shall[1] be created by incrementing the formation flight leader's ACID and generating a new beacon code for each of the flight elements, when requested via input at the TCP.	3.1.9	3.1.9.4 The system must [STARS-114] provide the controller with control over flight plan information.

3.2.1.1.8.9	1	STARS-SSD-00368	When a track is dropped by the system, storage of associated flight plan data shall[1] be terminated.	3.1.7	3.1.7.2 The system must [STARS-082] process Arrival, Departure, and Overflight Flight Plans generated internally by an adjacent Terminal facility. 3.1.7.3 The system must [STARS-083] process Arrival, Departure, and Overflight Flight Plans generated internally by an ARTCC.
3.2.1.1.8.9	2	STARS-SSD-00369	When the active leg of an In-Out-In (IOI) flight plan is dropped and no other leg becomes active, then each of the remaining legs shall[2] be dropped sequentially upon expiration of their deletion times, made up of the current or flight plan coordination time, plus a retention time, unless any leg has become active or suspended.	3.1.7	3.1.7.2 The system must [STARS-082] process Arrival, Departure, and Overflight Flight Plans generated internally by an adjacent Terminal facility. 3.1.7.3 The system must [STARS-083] process Arrival, Departure, and Overflight Flight Plans generated internally by an ARTCC.
3.2.1.1.8.10	1	STARS-SSD-00370	FDIO interface data uniquely pairing an ACID with a discrete or non-discrete beacon code shall[1] generate a flight plan. (STARS LITE only)	3.1.7	3.1.7.1 The system must [STARS-081] receive and transmit NAS Flight Plan information between STARS and an Air Route Traffic Control Center (ARTCC).
3.2.1.1.8.11	1	STARS-SSD-00371	The destination TCP for an interfacility handoff shall[1] be determined by matching field elements in the Flight Plan message, selected via adaptation, to corresponding parameters that define current configuration and current consolidation unless the TCP is specified in the initiate transfer message.	3.1.7	3.1.7.5 The system must [STARS-085] initiate and accept automatic handoffs of flights, based upon adaptation criteria, between itself and an ARTCC. 3.1.7.7 The system must [STARS-087] initiate and accept automatic handoffs of flights, based upon adaptation criteria, between itself and an adjacent Terminal facility.
3.2.1.1.8.12	1	STARS-SSD-00372	The TCP to be used as the destination TCP for an interfacility handoff shall[1] be the TCP specified in the Initiate Transfer message or, if consolidated, the position that the specified TCP is consolidated to.	3.1.7	3.1.7.4 The system must [STARS-084] initiate and accept manual handoffs of flights between itself and an ARTCC. 3.1.7.6 The system must [STARS-086] initiate and accept manual handoffs of flights between itself and an adjacent Terminal facility.
3.2.1.1.8.13	1	STARS-SSD-00373	Redirection of a handoff from an ARTCC, or an adjacent TRACON routed via the En Route automation system, to another TCP shall[1] be accomplished without having to accept the handoff at the current TCP.	3.1.7	3.1.7.5 The system must [STARS-085] initiate and accept automatic handoffs of flights, based upon adaptation criteria, between itself and an ARTCC. 3.1.7.7 The system must [STARS-087] initiate and accept automatic handoffs of flights, based upon adaptation criteria, between itself and an adjacent Terminal facility.

3.2.1.1.8.14	1	STARS-SSD-00374	The TCP to be used as the destination TCP for an intrafacility handoff shall[1] be the TCP specified by TCP input or, if consolidated, the position that the specified position is consolidated with unless the position is limited consolidated and the command specifies otherwise.	3.1.7	3.1.7.8 The system must [STARS-088] initiate and accept manual handoffs of flights between two TCPs within the facility.
3.2.1.1.8.15	1	STARS-SSD-00375	Control of tracks and flight plan information shall[1] be transferred to the handoff destination when a handoff accept action is taken on a flight that is in handoff status and is not controlled by the position performing the accept action.	3.1.7	3.1.7.4 The system must [STARS-084] initiate and accept manual handoffs of flights between itself and an ARTCC. 3.1.7.5 The system must [STARS-085] initiate and accept automatic handoffs of flights, based upon adaptation criteria, between itself and an ARTCC. 3.1.7.6 The system must [STARS-086] initiate and accept manual handoffs of flights between itself and an adjacent Terminal facility. 3.1.7.7 The system must [STARS-087] initiate and accept automatic handoffs of flights, based upon adaptation criteria, between itself and an adjacent Terminal facility. 3.1.7.8 The system must [STARS-088] initiate and accept manual handoffs of flights between two TCPs within the facility. 3.1.7.9 The system must [STARS-089] initiate and accept automatic handoffs of flights, based upon adaptation criteria, between two TCPs within the facility.
3.2.1.1.8.15	2	STARS-SSD-00376	When a handoff is accepted, the full data block at the position that owned the track prior to the handoff shall[2] be displayed in the Data Block Owned/Previously Owned Blink Color for a site-adaptable period of time, after which it will be displayed in the Data Block Owned/Previously Owned Color.	3.1.10	3.1.10.13 The system must [STARS-143] automatically initiate transfer of data block information to the receiving controller, either intra- or inter-facility, when site adaptable parameters are satisfied.

3.2.1.1.8.16	1	STARS-SSD-00377	When a handoff recall action is taken on a flight that is in handoff status and controlled by the position performing the action, the referenced flight plan shall[1] be removed from handoff status.	3.1.7	3.1.7.4 The system must [STARS-084] initiate and accept manual handoffs of flights between itself and an ARTCC. 3.1.7.5 The system must [STARS-085] initiate and accept automatic handoffs of flights, based upon adaptation criteria, between itself and an ARTCC. 3.1.7.6 The system must [STARS-086] initiate and accept manual handoffs of flights between itself and an adjacent Terminal facility. 3.1.7.7 The system must [STARS-087] initiate and accept automatic handoffs of flights, based upon adaptation criteria, between itself and an adjacent Terminal facility. 3.1.7.8 The system must [STARS-088] initiate and accept manual handoffs of flights between two TCPs within the facility. 3.1.7.9 The system must [STARS-089] initiate and accept automatic handoffs of flights, based upon adaptation criteria, between two TCPs within the facility.
3.2.1.1.8.17	1	STARS-SSD-00378	Transfer of control and display of tracks and flight information to and from an ARTCC or adjacent TRACON shall[1] be performed for manually initiated/accepted interfacility handoffs when the handoff is accepted.	3.1.7 3.1.10	3.1.7.4 The system must [STARS-084] initiate and accept manual handoffs of flights between itself and an ARTCC. 3.1.7.6 The system must [STARS-086] initiate and accept manual handoffs of flights between itself and an adjacent Terminal facility. 3.1.10.13 The system must [STARS-143] automatically initiate transfer of data block information to the receiving controller, either intra- or inter-facility, when site adaptable parameters are satisfied.

3.2.1.1.8.21	1	STARS-SSD-00379	All interfacility handoff attempts of overflights shall[1] be rejected when the reject option is set in adaptation.	3.1.7	3.1.7.5 The system must [STARS-085] initiate and accept automatic handoffs of flights, based upon adaptation criteria, between itself and an ARTCC. 3.1.7.7 The system must [STARS-087] initiate and accept automatic handoffs of flights, based upon adaptation criteria, between itself and an adjacent Terminal facility. 3.1.7.9 The system must [STARS-089] initiate and accept automatic handoffs of flights, based upon adaptation criteria, between two TCPs within the facility.
3.2.1.1.8.22	1	STARS-SSD-00380	Transfer of control and display of tracks and flight information within the TRACON shall[1] be performed for manually initiated/accepted intrafacility handoffs when the handoff is accepted.	3.1.7 3.1.10	3.1.7.8 The system must [STARS-088] initiate and accept manual handoffs of flights between two TCPs within the facility. 3.1.10.13 The system must [STARS-143] automatically initiate transfer of data block information to the receiving controller, either intra- or inter-facility, when site adaptable parameters are satisfied.
3.2.1.1.8.24	1	STARS-SSD-00381	Handoff acceptance actions performed via an implied command shall[1] be prohibited when the track is not being updated with STARS radar information.	3.1.7	3.1.7.4 The system must [STARS-084] initiate and accept manual handoffs of flights between itself and an ARTCC. 3.1.7.6 The system must [STARS-086] initiate and accept manual handoffs of flights between itself and an adjacent Terminal facility. 3.1.7.8 The system must [STARS-088] initiate and accept manual handoffs of flights between two TCPs within the facility.

3.2.1.1.8.25	1	STARS-SSD-00382	Handoff acceptance actions shall[1] be prohibited when the referenced track is beyond an adaptable sensor coverage area.	3.1.7	3.1.7.4 The system must [STARS-084] initiate and accept manual handoffs of flights between itself and an ARTCC. 3.1.7.6 The system must [STARS-086] initiate and accept manual handoffs of flights between itself and an adjacent Terminal facility. 3.1.7.8 The system must [STARS-088] initiate and accept manual handoffs of flights between two TCPs within the facility.
3.2.1.1.8.26	1	STARS-SSD-00383	Automatic initiation of interfacility handoffs shall[1] be performed for departures and overflights when flight plan/track conditions match adapted parameters.	3.1.7	3.1.7.5 The system must [STARS-085] initiate and accept automatic handoffs of flights, based upon adaptation criteria, between itself and an ARTCC. 3.1.7.7 The system must [STARS-087] initiate and accept automatic handoffs of flights, based upon adaptation criteria, between itself and an adjacent Terminal facility. 3.1.7.9 The system must [STARS-089] initiate and accept automatic handoffs of flights, based upon adaptation criteria, between two TCPs within the facility.
3.2.1.1.8.26	2	STARS-SSD-00384	When so adapted for the site, flights with ARTCC VFR flight plans shall[2] be disabled from automatic initiation of interfacility and intrafacility handoffs.	3.1.7	3.1.7.5 The system must [STARS-085] initiate and accept automatic handoffs of flights, based upon adaptation criteria, between itself and an ARTCC. 3.1.7.7 The system must [STARS-087] initiate and accept automatic handoffs of flights, based upon adaptation criteria, between itself and an adjacent Terminal facility. 3.1.7.9 The system must [STARS-089] initiate and accept automatic handoffs of flights, based upon adaptation criteria, between two TCPs within the facility.

3.2.1.1.8.26	3	STARS-SSD-00385	Adapted data that may be matched to initiate interfacility auto handoff to an adapted destination facility and optional sector shall[3] include, but not limited to, the following: a. Entry/exit fix pair b. Airspace volume c. Requested altitude band d. Look ahead time to TRACON boundary e. A/C type(s)	3.1.7	3.1.7.5 The system must [STARS-085] initiate and accept automatic handoffs of flights, based upon adaptation criteria, between itself and an ARTCC. 3.1.7.7 The system must [STARS-087] initiate and accept automatic handoffs of flights, based upon adaptation criteria, between itself and an adjacent Terminal facility.
3.2.1.1.8.28	1	STARS-SSD-00386	Automatic intrafacility handoffs with automatic initiation/acceptance shall[1] be performed for any flight.	3.1.7	3.1.7.9 The system must [STARS-089] initiate and accept automatic handoffs of flights, based upon adaptation criteria, between two TCPs within the facility.
3.2.1.1.8.30	1	STARS-SSD-00387	Automatic initiation or acceptance of an intrafacility handoff shall[1] occur when flight plan/track conditions match adapted parameters.	3.1.7	3.1.7.9 The system must [STARS-089] initiate and accept automatic handoffs of flights, based upon adaptation criteria, between two TCPs within the facility.
3.2.1.1.8.30	2	STARS-SSD-00388	Automatic initiation or acceptance of an intrafacility handoff shall[1] occur when flight plan/track conditions match adapted parameters.	3.1.7	3.1.7.9 The system must [STARS-089] initiate and accept automatic handoffs of flights, based upon adaptation criteria, between two TCPs within the facility.
3.2.1.1.8.32	1	STARS-SSD-00389	Adaptable default settings for automatic handoff processing enabling and disabling shall[1] be used when STARS is initiated.	3.1.7	3.1.7.5 The system must [STARS-085] initiate and accept automatic handoffs of flights, based upon adaptation criteria, between itself and an ARTCC. 3.1.7.7 The system must [STARS-087] initiate and accept automatic handoffs of flights, based upon adaptation criteria, between itself and an adjacent Terminal facility. 3.1.7.9 The system must [STARS-089] initiate and accept automatic handoffs of flights, based upon adaptation criteria, between two TCPs within the facility.
3.2.1.1.8.33.1	1	STARS-SSD-00390	A terminal area shall[1] consist of one to multiple Terminal Sectors each being adaptable and having an associated configuration plan.	3.1.2	3.1.2.1 The system must [STARS-011] automatically track all primary surveillance targets within a geographic area defined by SA parameters. 3.1.2.2 The system must [STARS-012] automatically track all secondary surveillance targets within a geographic area defined by SA parameters.

3.2.1.1.8.33.3	1	STARS-SSD-00391	The system shall[1] consist of no fewer than 12 configuration plans, each adaptable with one defaulted on at coldstart.	3.1.2	3.1.2.1 The system must [STARS-011] automatically track all primary surveillance targets within a geographic area defined by SA parameters. 3.1.2.2 The system must [STARS-012] automatically track all secondary surveillance targets within a geographic area defined by SA parameters.
3.2.1.1.8.33.6	1	STARS-SSD-00392	When resectorization is performed, new and existing flight plan information for flights that have never been associated to a track shall[1] be reassigned to TCPs, and potentially have their scratchpad information changed, based on the adaptation of the new configuration plan.	3.1.9	3.1.9.4 The system must [STARS-114] provide the controller with control over flight plan information.
3.2.1.1.8.33.6	3	STARS-SSD-00393	When resectorization is performed inactive flight plans with an automatic or unassigned scratchpad shall[3] have their scratchpad (1 or 2) set to the new default text per the adaptation criteria of the new configuration plan.	3.1.9	3.1.9.4 The system must [STARS-114] provide the controller with control over flight plan information.
3.2.1.1.8.33.7	1	STARS-SSD-00394	When resectorization is performed, no change in assignment shall[1] be made to flight plans that have acquired to a track.	3.1.9	3.1.9.4 The system must [STARS-114] provide the controller with control over flight plan information.
3.2.1.1.8.33.8	1	STARS-SSD-00395	When resectorization is performed, all consolidated positions shall[1] be deconsolidated except for positions for which the new configuration does not assign flight plans.	3.1.9	3.1.9.4 The system must [STARS-114] provide the controller with control over flight plan information.
3.2.1.1.8.33.9	1	STARS-SSD-00396	All unassociated and future flights arriving or departing over designated fix(es) shall[1] be reassigned to a specified TCP when a partial resectorization is performed.	3.1.9	3.1.9.4 The system must [STARS-114] provide the controller with control over flight plan information.
3.2.1.1.8.33.10	1	STARS-SSD-00397	When resectorization is performed, the MSAW departure inhibit and approach monitor inhibit areas for each MSAW/CA airport associated with the specified Terminal Sector(s) shall[1] be activated as defined in adaptation for the new configuration plan.	3.1.6 3.1.9	3.1.6.4 The system must [STARS-074] enable and disable MSAW processing for the entire TAS via manual entry. 3.1.9.4 The system must [STARS-114] provide the controller with control over flight plan information.
3.2.1.1.8.33.11	1	STARS-SSD-00398	When resectorization is performed, ATPA settings shall[1] be enabled or disabled per the adaptation of the new configuration plan.	3.1.2 3.1.9	3.1.2.10 The system must [STARS-020] provide tracking data for the Automatic Terminal Proximity Alert (ATPA). 3.1.9.4 The system must [STARS-114] provide the controller with control over flight plan information.

3.2.1.1.8.33.12	2	STARS-SSD-00399	When resectorization is performed, arrival/departure track ASV monitor processing shall[2] be automatically enabled or disabled per the adaptation of the new configuration plan.	3.1.2	3.1.2.1 The system must [STARS-011] automatically track all primary surveillance targets within a geographic area defined by SA parameters. 3.1.2.2 The system must [STARS-012] automatically track all secondary surveillance targets within a geographic area defined by SA parameters.
3.2.1.1.8.33.13	1	STARS-SSD-00400	When resectorization is performed, each flight-data auto-modify filter shall[1] be set to its adapted enable/disable status.	3.1.7	3.1.7.1 The system must [STARS-081] receive and transmit NAS Flight Plan information between STARS and an Air Route Traffic Control Center (ARTCC). 3.1.7.2 The system must [STARS-082] process Arrival, Departure, and Overflight Flight Plans generated internally by an adjacent Terminal facility.
3.2.1.1.8.34.1	1	STARS-SSD-00401	Control of all tracks and the control and display of all active, inactive and future flight plans shall[1] be transferred from one TCP to another upon full consolidation.	3.1.9	3.1.9.4 The system must [STARS-114] provide the controller with control over flight plan information.
3.2.1.1.8.34.1	2	STARS-SSD-00402	Display of all tracks in pointout accepted state shall[2] be transferred from one TCP to another when consolidation is performed unless the track becomes owned at the receiving TCP as a result of the consolidation.	3.1.9	3.1.9.4 The system must [STARS-114] provide the controller with control over flight plan information.
3.2.1.1.8.34.1	3	STARS-SSD-00403	The data block color of a previous owner of an intrafacility handoff shall[3] be changed to no longer denote ownership and not be transferred to the receiving TCP upon full consolidation.	3.1.9	3.1.9.4 The system must [STARS-114] provide the controller with control over flight plan information.

3.2.1.1.8.34.1	4	STARS-SSD-00404	The data block color of a previous owner of an interfacility handoff shall[4] be changed to no longer denote ownership and be transferred to the receiving TCP upon full consolidation.	3.1.7 3.1.9	3.1.7.4 The system must [STARS-084] initiate and accept manual handoffs of flights between itself and an ARTCC. 3.1.7.5 The system must [STARS-085] initiate and accept automatic handoffs of flights, based upon adaptation criteria, between itself and an ARTCC. 3.1.7.6 The system must [STARS-086] initiate and accept manual handoffs of flights between itself and an adjacent Terminal facility. 3.1.7.7 The system must [STARS-087] initiate and accept automatic handoffs of flights, based upon adaptation criteria, between itself and an adjacent Terminal facility. 3.1.9.4 The system must [STARS-114] provide the controller with control over flight plan information.
3.2.1.1.8.34.1	7	STARS-SSD-00405	When a consolidation is performed, tracks in pointout state either at the position that is relinquishing a TCP or that becomes owned at the consolidated position shall[7] no longer be displayed in the pointout state or be in the pointout state respectively.	3.1.9	3.1.9.4 The system must [STARS-114] provide the controller with control over flight plan information.
3.2.1.1.8.34.2	1	STARS-SSD-00406	All flight plan processing data directed to or forced to the transferring TCP shall[1] be passed to the TCP receiving the full consolidation.	3.1.9	3.1.9.4 The system must [STARS-114] provide the controller with control over flight plan information.
3.2.1.1.8.34.3	1	STARS-SSD-00407	Through adaptation, control and display of VFR tracks along with flight plan information and processing data directed to or forced to the transferring TCP, shall[1] be excluded from being transferred upon full consolidation.	3.1.9	3.1.9.4 The system must [STARS-114] provide the controller with control over flight plan information.
3.2.1.1.8.35.1	1	STARS-SSD-00408	Control and display of future flight plans and of flight plans other than those associated with tracks that have come under control of the TCP to be consolidated shall[1] be transferred from one TCP to another upon basic consolidation.	3.1.9	3.1.9.4 The system must [STARS-114] provide the controller with control over flight plan information.
3.2.1.1.8.35.2	1	STARS-SSD-00409	All flight plan processing data directed to or forced to the transferring TCP shall[1] be passed to the TCP receiving the basic consolidation.	3.1.9	3.1.9.4 The system must [STARS-114] provide the controller with control over flight plan information.

3.2.1.1.8.36.1	1	STARS-SSD-00410	Control and display of future flight plans assigned by reference to fix pairs and of flight plans other than those associated with tracks that have come under control of the TCP to be consolidated shall[1] be transferred from one TCP to another upon limited consolidation.	3.1.9	3.1.9.4 The system must [STARS-114] provide the controller with control over flight plan information.
3.2.1.1.8.36.2	1	STARS-SSD-00411	All flight plan processing data directed to or forced to the transferring TCP shall[1] be passed to the TCP receiving the limited consolidation unless the TCP input indicates otherwise.	3.1.9	3.1.9.4 The system must [STARS-114] provide the controller with control over flight plan information.
3.2.1.1.8.37	1	STARS-SSD-00412	A previous consolidation shall[1] be negated when deconsolidation is performed.	3.1.9	3.1.9.4 The system must [STARS-114] provide the controller with control over flight plan information.
3.2.1.1.8.37	2	STARS-SSD-00413	When a deconsolidation is performed, tracks in a pointout state at the position that is relinquishing a TCP shall[2] remain in the pointout state and continue to be displayed in the pointout color at that position.	3.1.9	3.1.9.4 The system must [STARS-114] provide the controller with control over flight plan information.
3.2.1.1.8.38.1	1	STARS-SSD-00414	When Flight Data Processing Mode is enabled for an ARTCC, all flights in interfacility handoffs from that ARTCC and all En Route flights in interfacility handoffs from an adjacent TRACON that use that ARTCC for IFDT message routing shall[1] be accepted without sending the Accept Transfer (TA) message to that ARTCC.	3.1.7	3.1.7.4 The system must [STARS-084] initiate and accept manual handoffs of flights between itself and an ARTCC. 3.1.7.5 The system must [STARS-085] initiate and accept automatic handoffs of flights, based upon adaptation criteria, between itself and an ARTCC. 3.1.7.6 The system must [STARS-086] initiate and accept manual handoffs of flights between itself and an adjacent Terminal facility. 3.1.7.7 The system must [STARS-087] initiate and accept automatic handoffs of flights, based upon adaptation criteria, between itself and an adjacent Terminal facility.
3.2.1.1.8.38.3	1	STARS-SSD-00415	When Flight Data Processing Mode is enabled for an ARTCC, all non-En Route flights in handoffs from an adjacent TRACON that use that ARTCC for IFDT message routing shall[1] be accepted without sending the Accept Transfer (TN) message and be removed from handoff without sending the Recall Transfer (TL) message to that adjacent TRACON.	3.1.7	3.1.7.7 The system must [STARS-087] initiate and accept automatic handoffs of flights, based upon adaptation criteria, between itself and an adjacent Terminal facility.

3.2.1.1.8.39	1	STARS-SSD-00416	Host interfacility flight plans shall[1] be assigned IFR unless the data in the altitude or aircraft category field of the incoming FP message indicates that the flight is VFR or OTP.	3.1.7	3.1.7.2 The system must [STARS-082] process Arrival, Departure, and Overflight Flight Plans generated internally by an adjacent Terminal facility. 3.1.7.3 The system must [STARS-083] process Arrival, Departure, and Overflight Flight Plans generated internally by an ARTCC.
3.2.1.1.8.39	2	STARS-SSD-00417	Interfacility flight plans received from an adjacent TRACON shall[2] be assigned VFR.	3.1.7	3.1.7.2 The system must [STARS-082] process Arrival, Departure, and Overflight Flight Plans generated internally by an adjacent Terminal facility.
3.2.1.1.8.39	3	STARS-SSD-00418	Flight plans entered by TCP input shall[3] be assigned IFR unless assigned a beacon code from a local VFR pool.	3.1.9	3.1.9.4 The system must [STARS-114] provide the controller with control over flight plan information.
3.2.1.1.8.40	1	STARS-SSD-00419	MSAW alerts shall[1] be inhibited or enabled based on VFR or non-VFR status respectively.	3.1.10	3.1.10.35 The system must [STARS-165] enable and disable MSAW aural alarms at each TCP via manual entry.
3.2.1.1.8.41	1	STARS-SSD-00420	Storage of flight plan data shall[1] permit a maximum of one arrival and an adapted number of overflight and departure flight plans with the same ACID while rejecting any that exceed these limits.	3.1.7	3.1.7.2 The system must [STARS-082] process Arrival, Departure, and Overflight Flight Plans generated internally by an adjacent Terminal facility. 3.1.7.3 The system must [STARS-083] process Arrival, Departure, and Overflight Flight Plans generated internally by an ARTCC.
3.2.1.1.8.41	5	STARS-SSD-00421	The first leg of an in-out-in series shall[5] be used in determining a duplicate ACID condition.	3.1.7	3.1.7.2 The system must [STARS-082] process Arrival, Departure, and Overflight Flight Plans generated internally by an adjacent Terminal facility. 3.1.7.3 The system must [STARS-083] process Arrival, Departure, and Overflight Flight Plans generated internally by an ARTCC.
3.2.1.1.8.42	1	STARS-SSD-00422	On acquisition of a departure flight, the flight's type of flight shall[1] be changed to arrival if the flight's exit fix is an airport within the TAS.	3.1.7	3.1.7.2 The system must [STARS-082] process Arrival, Departure, and Overflight Flight Plans generated internally by an adjacent Terminal facility. 3.1.7.3 The system must [STARS-083] process Arrival, Departure, and Overflight Flight Plans generated internally by an ARTCC.

3.2.1.1.8.43	1	STARS-SSD-00423	Upon acceptance of an interfacility handoff initiate message for a suspended track, the track shall[1] be unsuspended automatically.	3.1.7	3.1.7.4 The system must [STARS-084] initiate and accept manual handoffs of flights between itself and an ARTCC. 3.1.7.5 The system must [STARS-085] initiate and accept automatic handoffs of flights, based upon adaptation criteria, between itself and an ARTCC. 3.1.7.6 The system must [STARS-086] initiate and accept manual handoffs of flights between itself and an adjacent Terminal facility. 3.1.7.7 The system must [STARS-087] initiate and accept automatic handoffs of flights, based upon adaptation criteria, between itself and an adjacent Terminal facility.
3.2.1.1.8.43	2	STARS-SSD-00424	When an Initiate Transfer (TI) Message is received from an ARTCC for a departure flight plan that is not part of an In-Out-In series, the flight's type of flight shall[2] be changed to overflight.	3.1.7	3.1.7.2 The system must [STARS-082] process Arrival, Departure, and Overflight Flight Plans generated internally by an adjacent Terminal facility. 3.1.7.3 The system must [STARS-083] process Arrival, Departure, and Overflight Flight Plans generated internally by an ARTCC. 3.1.7.4 The system must [STARS-084] initiate and accept manual handoffs of flights between itself and an ARTCC. 3.1.7.5 The system must [STARS-085] initiate and accept automatic handoffs of flights, based upon adaptation criteria, between itself and an ARTCC.
3.2.1.1.8.44	1	STARS-SSD-00425	If a suspended track goes into a beacon code mismatch, it shall[1] be unsuspended automatically.	3.1.2	3.1.2.2 The system must [STARS-012] automatically track all secondary surveillance targets within a geographic area defined by SA parameters.
3.2.1.1.8.45	1	STARS-SSD-00426	An Reduced Vertical Separation Minima (RVSM) altitude block capability shall[1] be provided in adaptation such that the Assigned or Requested Altitude entered for a flight can be evaluated along with other adaptable parameters to determine if it is eligible or not for RVSM separation standards.	3.1.7	3.1.7.2 The system must [STARS-082] process Arrival, Departure, and Overflight Flight Plans generated internally by an adjacent Terminal facility. 3.1.7.3 The system must [STARS-083] process Arrival, Departure, and Overflight Flight Plans generated internally by an ARTCC.

3.2.1.1.9.1	1	STARS-SSD-00427	When the IFDT function is enabled, all inactive flight plans of interfacility origin shall[1] be optionally deleted by operator input.	3.1.9	3.1.9.4 The system must [STARS-114] provide the controller with control over flight plan information.
3.2.1.1.9.2	1	STARS-SSD-00428	When the IFDT function is disabled, receipt and transmission of IFDT messages shall[1] end, except for Test Data and Data Test messages.	3.1.7	3.1.7.1 The system must [STARS-081] receive and transmit NAS Flight Plan information between STARS and an Air Route Traffic Control Center (ARTCC).
3.2.1.1.9.3	1	STARS-SSD-00429	For a site adapted as NAS or OCONUS, interfacility data messages shall[1] be processed as specified in the STARS to ARTCC for IFDT ICD, NAS-IC-21058100 or STARS to APEX for IFDT Outside the US ICD, H372347 respectively.	3.1.7	3.1.7.1 The system must [STARS-081] receive and transmit NAS Flight Plan information between STARS and an Air Route Traffic Control Center (ARTCC).
3.2.1.1.9.3.1.1.1	1	STARS-SSD-00430	VFR Flight Plan messages shall[1] have a status of 'Departure', may contain data based on adaptation for fields not entered and be transmitted to an ARTCC when requested by TCP input.	3.1.7	3.1.7.4 The system must [STARS-084] initiate and accept manual handoffs of flights between itself and an ARTCC.
3.2.1.1.9.3.1.1.1	2	STARS-SSD-00431	A TRACON/ARTCC VFR Flight Plan message, amended by TCP input, shall[2] be retransmitted to the original ARTCC when the flight plan was rejected by that ARTCC.	3.1.7	3.1.7.4 The system must [STARS-084] initiate and accept manual handoffs of flights between itself and an ARTCC.
3.2.1.1.9.3.1.1.2	1	STARS-SSD-00432	Flight information received from an ARTCC in a Flight Plan or Amendment message shall[1] be stored, used to create a new flight plan or update an existing flight plan and used to determine Automatic Scratchpad based on adaptation criteria when the message is accepted.	3.1.7	3.1.7.1 The system must [STARS-081] receive and transmit NAS Flight Plan in¬formation between STARS and an Air Route Traffic Control Center (ARTCC).
3.2.1.1.9.3.1.1.3	1	STARS-SSD-00433	Non-En Route System Flight Plans shall[1] be generated and transmitted to adjacent TRACONs when an interfacility handoff to an adjacent TRACON is initiated, when the track from which the flight plan is developed is associated by the sending TRACON; and the track did not originate from an ARTCC flight plan.	3.1.7	3.1.7.6 The system must [STARS-086] initiate and accept manual handoffs of flights between itself and an adjacent Terminal facility. 3.1.7.7 The system must [STARS-087] initiate and accept automatic handoffs of flights, based upon adaptation criteria, between itself and an adjacent Terminal facility.
3.2.1.1.9.3.1.1.4	1	STARS-SSD-00434	Non-En Route System Flight Plans received from adjacent TRACONs shall[1] be processed in the same manner as an ARTCC Flight Plan with the exception of interfacility duplicate ACID checking.	3.1.7	3.1.7.2 The system must [STARS-082] process Arrival, Departure, and Overflight Flight Plans generated internally by an adjacent Terminal facility.
3.2.1.1.9.3.1.1.4	2	STARS-SSD-00435	When the status of a Non-En Route System Flight Plan received from an adjacent TRACON is not arrival or overflight, the flight plan shall[2] be rejected.	3.1.7	3.1.7.2 The system must [STARS-082] process Arrival, Departure, and Overflight Flight Plans generated internally by an adjacent Terminal facility.

3.2.1.1.9.3.1.1.4	3	STARS-SSD-00436	Flight information received from an adjacent TRACON in an accepted Non-En-Route System Flight Plan message shall[3] be stored and used to create a new Flight Plan.	3.1.7	3.1.7.1 The system must [STARS-081] receive and transmit NAS Flight Plan in¬formation between STARS and an Air Route Traffic Control Center (ARTCC).
3.2.1.1.9.3.1.1.5.1	1	STARS-SSD-00437	When an arrival flight plan is received with the same ACID and En-Route Computer ID (ECID) as an existing arrival flight plan, the new flight plan shall[1] be accepted and discarded.	3.1.7	3.1.7.2 The system must [STARS-082] process Arrival, Departure, and Overflight Flight Plans generated internally by an adjacent Terminal facility. 3.1.7.3 The system must [STARS-083] process Arrival, Departure, and Overflight Flight Plans generated internally by an ARTCC.
3.2.1.1.9.3.1.1.5.2	1	STARS-SSD-00438	When an interfacility flight plan is received that has identical fields to that of an existing manually entered flight plan previously received, it shall[1] update the existing flight plan's missing ECID and allow the flight plan to be eligible for interfacility message processing.	3.1.7	3.1.7.2 The system must [STARS-082] process Arrival, Departure, and Overflight Flight Plans generated internally by an adjacent Terminal facility. 3.1.7.3 The system must [STARS-083] process Arrival, Departure, and Overflight Flight Plans generated internally by an ARTCC.
3.2.1.1.9.3.1.1.5.3	1	STARS-SSD-00439	A departure flight plan which contains a TCID with either the same or different ACID as a VFR departure flight plan shall[1] accept and replace the previous or assign a new TCID and create a new flight plan respectively.	3.1.7	3.1.7.2 The system must [STARS-082] process Arrival, Departure, and Overflight Flight Plans generated internally by an adjacent Terminal facility. 3.1.7.3 The system must [STARS-083] process Arrival, Departure, and Overflight Flight Plans generated internally by an ARTCC.
3.2.1.1.9.3.1.1.5.6	1	STARS-SSD-00440	An overflight flight plan that contains an ACID and ECID which is a duplicate of a previously accepted overflight flight plan shall[1] accepted then discarded unless the overflight flight plan forms an In-Out-In flight with the previously accepted overflight flight plan.	3.1.7	3.1.7.2 The system must [STARS-082] process Arrival, Departure, and Overflight Flight Plans generated internally by an adjacent Terminal facility. 3.1.7.3 The system must [STARS-083] process Arrival, Departure, and Overflight Flight Plans generated internally by an ARTCC.
3.2.1.1.9.3.1.1.5.7	1	STARS-SSD-00441	A departure flight plan that contains an ACID and ECID which is a duplicate of a previously accepted departure flight plan shall[1] be accepted and discarded.	3.1.7	3.1.7.2 The system must [STARS-082] process Arrival, Departure, and Overflight Flight Plans generated internally by an adjacent Terminal facility. 3.1.7.3 The system must [STARS-083] process Arrival, Departure, and Overflight Flight Plans generated internally by an ARTCC.

3.2.1.1.9.3.1.1.5.8	1	STARS-SSD-00442	When an interfacility flight plan is received and all the fields are the same as an existing interfacility flight plan but the ECID is different it shall[1] be accepted and discarded, and the existing ECID will be replaced with the new ECID.	3.1.7	3.1.7.2 The system must [STARS-082] process Arrival, Departure, and Overflight Flight Plans generated internally by an adjacent Terminal facility. 3.1.7.3 The system must [STARS-083] process Arrival, Departure, and Overflight Flight Plans generated internally by an ARTCC.
3.2.1.1.9.3.1.1.5.9	1	STARS-SSD-00443	When a flight plan is received with a different ACID but the same ECID as an existing flight plan, the incoming flight plan shall[1] be accepted and the existing flight plan deleted if the existing flight plan is not active and the time between its ETA or PTD and the current time is greater than an adapted parameter.	3.1.7	3.1.7.2 The system must [STARS-082] process Arrival, Departure, and Overflight Flight Plans generated internally by an adjacent Terminal facility. 3.1.7.3 The system must [STARS-083] process Arrival, Departure, and Overflight Flight Plans generated internally by an ARTCC.
3.2.1.1.9.3.1.1.5.10	1	STARS-SSD-00444	When a flight plan is received with a different ACID but the same ECID as an existing flight plan, the incoming flight plan shall[1] be accepted and the existing flight plan changed to a local flight plan with a STARS controller ID if the existing flight is active and not in intra/interfacility handoff, or is not active and the time between its ETA or PTD and the current time is less than or equal to an adapted parameter.	3.1.7	3.1.7.2 The system must [STARS-082] process Arrival, Departure, and Overflight Flight Plans generated internally by an adjacent Terminal facility. 3.1.7.3 The system must [STARS-083] process Arrival, Departure, and Overflight Flight Plans generated internally by an ARTCC.
3.2.1.1.9.3.1.1.5.10	2	STARS-SSD-00445	An arrival flight plan that has the same ACID, ECID and beacon code/radar only as an existing overflight flight plan, and is not eligible to form or become part of an In-Out-In series with the existing flight plan, nor part of an In-Out-In series that already contains an arrival shall[2] be accepted and replace the existing flight plan using the same TCID.	3.1.7	3.1.7.2 The system must [STARS-082] process Arrival, Departure, and Overflight Flight Plans generated internally by an adjacent Terminal facility. 3.1.7.3 The system must [STARS-083] process Arrival, Departure, and Overflight Flight Plans generated internally by an ARTCC.
3.2.1.1.9.3.1.1.5.11	1	STARS-SSD-00446	When an interfacility departure flight plan is received that contains the same ACID, ECID and beacon code/radar only as an existing interfacility overflight or arrival flight plan and none of the existing flight plans in the In-Out-In series is a departure or active, then the received flight plan shall[1] be stored and identified as the first leg of the In-Out-In series.	3.1.7	3.1.7.2 The system must [STARS-082] process Arrival, Departure, and Overflight Flight Plans generated internally by an adjacent Terminal facility. 3.1.7.3 The system must [STARS-083] process Arrival, Departure, and Overflight Flight Plans generated internally by an ARTCC.

3.2.1.1.9.3.1.1.5.11	2	STARS-SSD-00447	A received interfacility arrival flight plan shall[2] be stored and identified as the last leg of an In-Out-In series if the following conditions are met: a. The received flight plan contains the same ACID, ECID, and beacon code/radar only as an existing interfacility overflight or departure flight plan b. None of the existing flight plans in the In-Out-In series is an arrival c. Either no overflight exists, one of the overflights is in handoff to the TRACON or under terminal control, or the arrival has a coordination time within adaptable limits of an overflight leg.	3.1.7	3.1.7.2 The system must [STARS-082] process Arrival, Departure, and Overflight Flight Plans generated internally by an adjacent Terminal facility. 3.1.7.3 The system must [STARS-083] process Arrival, Departure, and Overflight Flight Plans generated internally by an ARTCC.
3.2.1.1.9.3.1.1.5.11	3	STARS-SSD-00448	When an interfacility overflight flight plan is received that contains the same ACID, ECID and beacon code/radar as an existing interfacility flight plan, and none of the existing flight plans is an active arrival and it does not match that of any other overflight flight plan with the same coordination time then the received overflight shall[3] be stored and identified as a leg of an In-Out-In series.	3.1.7	3.1.7.2 The system must [STARS-082] process Arrival, Departure, and Overflight Flight Plans generated internally by an adjacent Terminal facility. 3.1.7.3 The system must [STARS-083] process Arrival, Departure, and Overflight Flight Plans generated internally by an ARTCC.
3.2.1.1.9.3.1.1.5.12	1	STARS-SSD-00449	When an interfacility flight plan is received that contains a different ECID and ACID but the same assigned beacon code as an existing leg of an In-Out-In series, and the first leg has an active deletion timer, then the new flight plan shall[1] be accepted, and all remaining legs of the In-Out-In series will be deleted.	3.1.7	3.1.7.2 The system must [STARS-082] process Arrival, Departure, and Overflight Flight Plans generated internally by an adjacent Terminal facility. 3.1.7.3 The system must [STARS-083] process Arrival, Departure, and Overflight Flight Plans generated internally by an ARTCC.
3.2.1.1.9.3.1.1.6	1	STARS-SSD-00450	If an FP or AM message is received that contains an adapted aircraft type, the aircraft category adapted for the aircraft type and its corresponding weight class/wake category shall[1] be stored in the flight plan.	3.1.7	3.1.7.2 The system must [STARS-082] process Arrival, Departure, and Overflight Flight Plans generated internally by an adjacent Terminal facility. 3.1.7.3 The system must [STARS-083] process Arrival, Departure, and Overflight Flight Plans generated internally by an ARTCC.
3.2.1.1.9.3.1.1.6	2	STARS-SSD-00451	If an FP or AM message is received that contains a non-adapted type, or an FP message is received that does not contain an aircraft type, the aircraft category and weight class/wake category stored in the flight plan shall[2] be set to unknown.	3.1.7	3.1.7.2 The system must [STARS-082] process Arrival, Departure, and Overflight Flight Plans generated internally by an adjacent Terminal facility. 3.1.7.3 The system must [STARS-083] process Arrival, Departure, and Overflight Flight Plans generated internally by an ARTCC.

3.2.1.1.9.3.1.2	1	STARS-SSD-00452	A Departure Message (DM) shall[1] be generated and transmitted to an ARTCC when automatic track acquisition occurs, or a track is started manually by TCP input, on a departure flight plan that was received from that ARTCC.	3.1.7	3.1.7.5 The system must [STARS-085] initiate and accept automatic handoffs of flights, based upon adaptation criteria, between itself and an ARTCC.
3.2.1.1.9.3.1.3.1	1	STARS-SSD-00453	An Acceptance Response (DA) message shall[1] be transmitted when an Amendment (AM) message specifying a change in an interfacility flight plan field is accepted, whether the change is made or discarded.	3.1.7	3.1.7.1 The system must [STARS-081] receive and transmit NAS Flight Plan information between STARS and an Air Route Traffic Control Center (ARTCC). 3.1.7.2 The system must [STARS-082] process Arrival, Departure, and Overflight Flight Plans generated internally by an adjacent Terminal facility. 3.1.7.3 The system must [STARS-083] process Arrival, Departure, and Overflight Flight Plans generated internally by an ARTCC.
3.2.1.1.9.3.1.3.2	1	STARS-SSD-00454	A flight plan that was changed by the acceptance of an Amendment Message shall[1] be validated in the same manner that a received flight plan is validated.	3.1.7	3.1.7.2 The system must [STARS-082] process Arrival, Departure, and Overflight Flight Plans generated internally by an adjacent Terminal facility. 3.1.7.3 The system must [STARS-083] process Arrival, Departure, and Overflight Flight Plans generated internally by an ARTCC.
3.2.1.1.9.3.1.3.3	1	STARS-SSD-00455	An Amendment message specifying a change in an ARTCC flight plan shall[1] be processed in accordance with Table 3.2.1.1.9-3.	3.1.7	3.1.7.3 The system must [STARS-083] process Arrival, Departure, and Overflight Flight Plans generated internally by an ARTCC.
3.2.1.1.9.3.1.3.4	1	STARS-SSD-00456	An Amendment message received for a flight plan that is a leg of an In-Out-In series shall[1] be rejected if the message amends a departure/overflight to an arrival and the series already contains an arrival, or the message amends an overflight/arrival to a departure and the series already contains a departure, or the series contains an active leg.	3.1.7	3.1.7.2 The system must [STARS-082] process Arrival, Departure, and Overflight Flight Plans generated internally by an adjacent Terminal facility. 3.1.7.3 The system must [STARS-083] process Arrival, Departure, and Overflight Flight Plans generated internally by an ARTCC.
3.2.1.1.9.3.1.3.5	1	STARS-SSD-00457	An amendment message changing the ACID and/or Beacon Code of a flight that is a leg of an In-Out-In series shall[1] modify the ACID and/or Beacon Code of all of the legs when all the legs are inactive; or reject the ACID or accept and discard the Beacon Code if any leg is active.	3.1.7	3.1.7.2 The system must [STARS-082] process Arrival, Departure, and Overflight Flight Plans generated internally by an adjacent Terminal facility. 3.1.7.3 The system must [STARS-083] process Arrival, Departure, and Overflight Flight Plans generated internally by an ARTCC.

3.2.1.1.9.3.1.3.6	1	STARS-SSD-00458	An amendment message amending the coordination time of an overflight flight plan that is part of an In-Out-In series shall[1] cause any inactive overflight flight plans in the series to be re-sorted into time order.	3.1.7	3.1.7.2 The system must [STARS-082] process Arrival, Departure, and Overflight Flight Plans generated internally by an adjacent Terminal facility. 3.1.7.3 The system must [STARS-083] process Arrival, Departure, and Overflight Flight Plans generated internally by an ARTCC.
3.2.1.1.9.3.1.3.6	2	STARS-SSD-00459	An amendment to the coordination time of any inactive leg of an In-Out-In series shall[2] cause its deletion timer to be re-initiated.	3.1.7	3.1.7.2 The system must [STARS-082] process Arrival, Departure, and Overflight Flight Plans generated internally by an adjacent Terminal facility. 3.1.7.3 The system must [STARS-083] process Arrival, Departure, and Overflight Flight Plans generated internally by an ARTCC.
3.2.1.1.9.3.1.4.1	1	STARS-SSD-00460	When a flight referenced by a Cancellation message (CX) has never come under STARS control, flight plan information for that flight shall[1] be removed or, if it is in a coordination list changed to a local flight plan with an indication denoting cancellation of that flight.	3.1.7	3.1.7.2 The system must [STARS-082] process Arrival, Departure, and Overflight Flight Plans generated internally by an adjacent Terminal facility. 3.1.7.3 The system must [STARS-083] process Arrival, Departure, and Overflight Flight Plans generated internally by an ARTCC.
3.2.1.1.9.3.1.4.1	2	STARS-SSD-00461	When an arrival or overflight flight plan referenced by a CX message has been auto-acquired and is under ARTCC control, has not yet come under STARS control and no inbound handoff accept is in progress, flight plan information for that flight shall[2] be removed.	3.1.7	3.1.7.2 The system must [STARS-082] process Arrival, Departure, and Overflight Flight Plans generated internally by an adjacent Terminal facility. 3.1.7.3 The system must [STARS-083] process Arrival, Departure, and Overflight Flight Plans generated internally by an ARTCC.
3.2.1.1.9.3.1.4.1	3	STARS-SSD-00462	When a CX message is received for a flight that is a leg of an In-Out-In series containing two or more legs, the flight identified in the CX message shall[3] be deleted and either no longer identify the remaining flight plan as a leg in an In-Out-In series or reorder the remaining legs in the series.	3.1.7	3.1.7.2 The system must [STARS-082] process Arrival, Departure, and Overflight Flight Plans generated internally by an adjacent Terminal facility. 3.1.7.3 The system must [STARS-083] process Arrival, Departure, and Overflight Flight Plans generated internally by an ARTCC.
3.2.1.1.9.3.1.4.2	1	STARS-SSD-00463	When a CX message from an adjacent TRACON is received for either a track which has acquired but is under the control of the adjacent facility or a track that has never been active in the receiving facilities STARS system, flight plan information for that flight shall[1] be removed immediately.	3.1.7	3.1.7.2 The system must [STARS-082] process Arrival, Departure, and Overflight Flight Plans generated internally by an adjacent Terminal facility.

3.2.1.1.9.3.1.4.3	1	STARS-SSD-00464	A CX message to an adjacent TRACON shall[1] be automatically generated and sent when either an Initiate Transfer (TM) message is not accepted or a Data Accept (DA) message for a successful Transfer Recall (TL) message has been received from an adjacent TRACON which previously had accepted a flight plan.	3.1.7	3.1.7.6 The system must [STARS-086] initiate and accept manual handoffs of flights between itself and an adjacent Terminal facility. 3.1.7.7 The system must [STARS-087] initiate and accept automatic handoffs of flights, based upon adaptation criteria, between itself and an adjacent Terminal facility.
3.2.1.1.9.3.1.5	1	STARS-SSD-00465	When adaptation supports that the ARTCC can process Request Flight Plan (RF) messages, the system shall[1] generate and transmit an RF message to an ARTCC when TCP input identifies a discrete beacon code or ECID or when a departure flight plan is not available for a departure flight with a discrete beacon code in an adaptable area.	3.1.7 3.1.9	3.1.7.4 The system must [STARS-084] initiate and accept manual handoffs of flights between itself and an ARTCC. 3.1.7.5 The system must [STARS-085] initiate and accept automatic handoffs of flights, based upon adaptation criteria, between itself and an ARTCC. 3.1.9.4 The system must [STARS-114] provide the controller with control over flight plan information.
3.2.1.1.9.3.1.6	1	STARS-SSD-00466	A Beacon Terminate (TB) message(s) shall[1] be generated and sent upon TCP entry to drop a single track, or to drop multiple tracks if enabling IFDT, or if the track qualifies for an auto drop area and the tracks are not a leg of an In-Out-In series.	3.1.7	3.1.7.2 The system must [STARS-082] process Arrival, Departure, and Overflight Flight Plans generated internally by an adjacent Terminal facility. 3.1.7.3 The system must [STARS-083] process Arrival, Departure, and Overflight Flight Plans generated internally by an ARTCC.
3.2.1.1.9.3.2.1	1	STARS-SSD-00467	Position and velocity information transmitted to an adjacent TRACON shall[1] undergo coordinate translation based upon adaptation.	3.1.7	3.1.7.2 The system must [STARS-082] process Arrival, Departure, and Overflight Flight Plans generated internally by an adjacent Terminal facility.

3.2.1.1.9.3.2.2.1	1	STARS-SSD-00468	An Initiate Transfer (TI) message shall[1] be generated and sent to an ARTCC or an adjacent TRACON from either a TCP handoff action or a track qualifies for auto Hand-off via adaptation, with Field 13 data also being sent based on adaptation.	3.1.7	3.1.7.4 The system must [STARS-084] initiate and accept manual handoffs of flights between itself and an ARTCC. 3.1.7.5 The system must [STARS-085] initiate and accept automatic handoffs of flights, based upon adaptation criteria, between itself and an ARTCC. 3.1.7.6 The system must [STARS-086] initiate and accept manual handoffs of flights between itself and an adjacent Terminal facility. 3.1.7.7 The system must [STARS-087] initiate and accept automatic handoffs of flights, based upon adaptation criteria, between itself and an adjacent Terminal facility.
3.2.1.1.9.3.2.2.1	2	STARS-SSD-00469	A TI message shall[2] not be generated if a Recall Transfer (TA) message has been sent on the track or once an automatic initiate hand-off to the ARTCC or adjacent TRACON has failed.	3.1.7	3.1.7.4 The system must [STARS-084] initiate and accept manual handoffs of flights between itself and an ARTCC. 3.1.7.5 The system must [STARS-085] initiate and accept automatic handoffs of flights, based upon adaptation criteria, between itself and an ARTCC. 3.1.7.6 The system must [STARS-086] initiate and accept manual handoffs of flights between itself and an adjacent Terminal facility. 3.1.7.7 The system must [STARS-087] initiate and accept automatic handoffs of flights, based upon adaptation criteria, between itself and an adjacent Terminal facility.

3.2.1.1.9.3.2.2.2	1	STARS-SSD-00470	When STARS accepts a Initiate Transfer (TI) message for an arrival or overflight flight plan the handoff process shall[1] begin.	3.1.7	3.1.7.4 The system must [STARS-084] initiate and accept manual handoffs of flights between itself and an ARTCC. 3.1.7.5 The system must [STARS-085] initiate and accept automatic handoffs of flights, based upon adaptation criteria, between itself and an ARTCC. 3.1.7.6 The system must [STARS-086] initiate and accept manual handoffs of flights between itself and an adjacent Terminal facility. 3.1.7.7 The system must [STARS-087] initiate and accept automatic handoffs of flights, based upon adaptation criteria, between itself and an adjacent Terminal facility. 3.1.7.8 The system must [STARS-088] initiate and accept manual handoffs of flights between two TCPs within the facility. 3.1.7.9 The system must [STARS-089] initiate and accept automatic handoffs of flights, based upon adaptation criteria, between two TCPs within the facility.
3.2.1.1.9.3.2.2.2	2	STARS-SSD-00471	Based on adaptation, when there is no track that is associated with either the TI message or the assigned beacon code the position and velocity information in the TI message shall[2] be used to display its position until the track auto acquires with the TI message or assigned beacon code.	3.1.7	3.1.7.2 The system must [STARS-082] process Arrival, Departure, and Overflight Flight Plans generated internally by an adjacent Terminal facility. 3.1.7.3 The system must [STARS-083] process Arrival, Departure, and Overflight Flight Plans generated internally by an ARTCC. 3.1.10.7 The system must [STARS-137] display a target indicator at the position of each surveillance target received in single sensor mode. 3.1.10.8 The system must [STARS-138] display a target indicator at the composite position of each surveillance target received in multi-sensor and Fusion modes.

3.2.1.1.9.3.2.2.2	4	STARS-SSD-00472	When STARS accepts an interfacility handoff for an arrival or overflight flight plan that contains the same ACID as an active departure or overflight previously owned by the STARS facility, the active departure or overflight flight plan shall[4] be deleted if so adapted.	3.1.7	3.1.7.2 The system must [STARS-082] process Arrival, Departure, and Overflight Flight Plans generated internally by an adjacent Terminal facility. 3.1.7.3 The system must [STARS-083] process Arrival, Departure, and Overflight Flight Plans generated internally by an ARTCC. 3.1.7.4 The system must [STARS-084] initiate and accept manual handoffs of flights between itself and an ARTCC. 3.1.7.5 The system must [STARS-085] initiate and accept automatic handoffs of flights, based upon adaptation criteria, between itself and an ARTCC. 3.1.7.6 The system must [STARS-086] initiate and accept manual handoffs of flights between itself and an adjacent Terminal facility. 3.1.7.7 The system must [STARS-087] initiate and accept automatic handoffs of flights, based upon adaptation criteria, between itself and an adjacent Terminal facility.

3.2.1.1.9.3.2.2.2	5	STARS-SSD-00473	When STARS accepts an interfacility handoff for an arrival or overflight flight plan that is the Middle or Last Leg of an In-Out-In series, the flight plans for all earlier legs shall[5] be deleted.	3.1.7	3.1.7.2 The system must [STARS-082] process Arrival, Departure, and Overflight Flight Plans generated internally by an adjacent Terminal facility. 3.1.7.3 The system must [STARS-083] process Arrival, Departure, and Overflight Flight Plans generated internally by an ARTCC. 3.1.7.4 The system must [STARS-084] initiate and accept manual handoffs of flights between itself and an ARTCC. 3.1.7.5 The system must [STARS-085] initiate and accept automatic handoffs of flights, based upon adaptation criteria, between itself and an ARTCC. 3.1.7.6 The system must [STARS-086] initiate and accept manual handoffs of flights between itself and an adjacent Terminal facility. 3.1.7.7 The system must [STARS-087] initiate and accept automatic handoffs of flights, based upon adaptation criteria, between itself and an adjacent Terminal facility.
3.2.1.1.9.3.2.2.3	1	STARS-SSD-00474	A Non-En Route System Initiate Transfer (TM) message shall[1] be generated and sent to an adjacent TRACON when a TCP takes a handoff action which is intended to transfer control of flight information for an arrival or overflight to that TRACON, when the track from which the flight plan is developed is active, associated, and controlled by the sending TRACON; and the track did not originate from an ARTCC flight plan.	3.1.7	3.1.7.6 The system must [STARS-086] initiate and accept manual handoffs of flights between itself and an adjacent Terminal facility. 3.1.7.7 The system must [STARS-087] initiate and accept automatic handoffs of flights, based upon adaptation criteria, between itself and an adjacent Terminal facility.
3.2.1.1.9.3.2.2.4	1	STARS-SSD-00475	When STARS accepts an Initiate Transfer (TM) message from an adjacent TRACON for an arrival or overflight flight plan the handoff process shall[1] begin.	3.1.7	3.1.7.6 The system must [STARS-086] initiate and accept manual handoffs of flights between itself and an adjacent Terminal facility. 3.1.7.7 The system must [STARS-087] initiate and accept automatic handoffs of flights, based upon adaptation criteria, between itself and an adjacent Terminal facility.

3.2.1.1.9.3.2.2.4	2	STARS-SSD-00476	Based on adaptation, when there is no track that is associated with the assigned beacon code the position and velocity information in the TM message shall[2] be used to display its position until the track auto acquires with the assigned beacon code.	3.1.7	3.1.7.2 The system must [STARS-082] process Arrival, Departure, and Overflight Flight Plans generated internally by an adjacent Terminal facility. 3.1.7.3 The system must [STARS-083] process Arrival, Departure, and Overflight Flight Plans generated internally by an ARTCC. 3.1.10.7 The system must [STARS-137] display a target indicator at the position of each surveillance target received in single sensor mode. 3.1.10.8 The system must [STARS-138] display a target indicator at the composite position of each surveillance target received in multi-sensor and Fusion modes.
3.2.1.1.9.3.2.3.1	1	STARS-SSD-00477	An Accept Transfer (TA) to an ARTCC or adjacent TRACON or a (TN) to an adjacent TRACON shall[1] be transmitted, with Field 48 if adapted, when either a TCP entry initiates a handoff accept or an unconditional handoff accept is initiated in which case all responses are discarded.	3.1.7	3.1.7.4 The system must [STARS-084] initiate and accept manual handoffs of flights between itself and an ARTCC. 3.1.7.5 The system must [STARS-085] initiate and accept automatic handoffs of flights, based upon adaptation criteria, between itself and an ARTCC. 3.1.7.6 The system must [STARS-086] initiate and accept manual handoffs of flights between itself and an adjacent Terminal facility. 3.1.7.7 The system must [STARS-087] initiate and accept automatic handoffs of flights, based upon adaptation criteria, between itself and an adjacent Terminal facility.

3.2.1.1.9.3.2.3.2	1	STARS-SSD-00478	Handoff of a flight plan to an ARTCC or an adjacent TRACON shall[1] be completed when either an Acceptance message (DA) or no Data Reject (DR) is received for the TA.	3.1.7	3.1.7.4 The system must [STARS-084] initiate and accept manual handoffs of flights between itself and an ARTCC. 3.1.7.5 The system must [STARS-085] initiate and accept automatic handoffs of flights, based upon adaptation criteria, between itself and an ARTCC. 3.1.7.6 The system must [STARS-086] initiate and accept manual handoffs of flights between itself and an adjacent Terminal facility. 3.1.7.7 The system must [STARS-087] initiate and accept automatic handoffs of flights, based upon adaptation criteria, between itself and an adjacent Terminal facility.
3.2.1.1.9.3.2.3.3	1	STARS-SSD-00479	A TN message shall[1] be transmitted to an adjacent TRACON when a TCP initiates either a normal or unconditional handoff accept.	3.1.7	3.1.7.6 The system must [STARS-086] initiate and accept manual handoffs of flights between itself and an adjacent Terminal facility. 3.1.7.7 The system must [STARS-087] initiate and accept automatic handoffs of flights, based upon adaptation criteria, between itself and an adjacent Terminal facility.
3.2.1.1.9.3.2.3.4	1	STARS-SSD-00480	Handoff of a flight plan from an adjacent TRACON shall[1] be completed when either an Acceptance message (DA) or no Data Reject (DR) is received for the TN.	3.1.7	3.1.7.6 The system must [STARS-086] initiate and accept manual handoffs of flights between itself and an adjacent Terminal facility. 3.1.7.7 The system must [STARS-087] initiate and accept automatic handoffs of flights, based upon adaptation criteria, between itself and an adjacent Terminal facility.

3.2.1.1.9.3.2.4.1	1	STARS-SSD-00481	When a flight plan is in the process of being handed off via interfacility and that handoff has not been accepted it shall[1] be capable of being recalled by either a normal or unconditional TCP entry and subsequent TA message being generated and accepted or not respectively.	3.1.7	3.1.7.4 The system must [STARS-084] initiate and accept manual handoffs of flights between itself and an ARTCC. 3.1.7.5 The system must [STARS-085] initiate and accept automatic handoffs of flights, based upon adaptation criteria, between itself and an ARTCC. 3.1.7.6 The system must [STARS-086] initiate and accept manual handoffs of flights between itself and an adjacent Terminal facility. 3.1.7.7 The system must [STARS-087] initiate and accept automatic handoffs of flights, based upon adaptation criteria, between itself and an adjacent Terminal facility.
3.2.1.1.9.3.2.4.2	1	STARS-SSD-00482	Handoff from an ARTCC or an adjacent TRACON shall[1] be terminated when a recall message, transmitted by that ARTCC/TRACON, is accepted.	3.1.7	3.1.7.4 The system must [STARS-084] initiate and accept manual handoffs of flights between itself and an ARTCC. 3.1.7.5 The system must [STARS-085] initiate and accept automatic handoffs of flights, based upon adaptation criteria, between itself and an ARTCC. 3.1.7.6 The system must [STARS-086] initiate and accept manual handoffs of flights between itself and an adjacent Terminal facility. 3.1.7.7 The system must [STARS-087] initiate and accept automatic handoffs of flights, based upon adaptation criteria, between itself and an adjacent Terminal facility.
3.2.1.1.9.3.2.4.2	2	STARS-SSD-00483	When a recall message is accepted from an ARTCC or an adjacent TRACON for a track in handoff and the corresponding track was actively tracked or uncorrelated, the track shall[2] maintain that status after the acceptance of the TA.	3.1.7	3.1.7.2 The system must [STARS-082] process Arrival, Departure, and Overflight Flight Plans generated internally by an adjacent Terminal facility. 3.1.7.3 The system must [STARS-083] process Arrival, Departure, and Overflight Flight Plans generated internally by an ARTCC.

3.2.1.1.9.3.2.4.2	3	STARS-SSD-00484	When a recall message is accepted from an ARTCC for a track in handoff and the corresponding track was not correlating on the TI beacon code then the track shall[3] become an inactive flight plan and maintain its eligibility status for auto-acquisition after the acceptance of the TA.	3.1.7	3.1.7.3 The system must [STARS-083] process Arrival, Departure, and Overflight Flight Plans generated internally by an ARTCC.
3.2.1.1.9.3.2.4.3	1	STARS-SSD-00485	A Recall Transfer (TL) message shall[1] be sent to an adjacent TRACON, prior to receipt of an Accept Transfer message from that facility, when TCP input initiates either a normal or unconditional recall action for a track in handoff to an adjacent TRACON.	3.1.7	3.1.7.6 The system must [STARS-086] initiate and accept manual handoffs of flights between itself and an adjacent Terminal facility. 3.1.7.7 The system must [STARS-087] initiate and accept automatic handoffs of flights, based upon adaptation criteria, between itself and an adjacent Terminal facility.
3.2.1.1.9.3.2.4.3	2	STARS-SSD-00486	The referenced flight shall[2] be removed from handoff when an Acceptance Message (DA) for a normal recall is received or the referenced flight removed from handoff and any TRACON response discarded for an unconditional recall.	3.1.7	3.1.7.6 The system must [STARS-086] initiate and accept manual handoffs of flights between itself and an adjacent Terminal facility. 3.1.7.7 The system must [STARS-087] initiate and accept automatic handoffs of flights, based upon adaptation criteria, between itself and an adjacent Terminal facility.
3.2.1.1.9.3.2.4.4	1	STARS-SSD-00487	Handoff from an adjacent TRACON shall[1] be terminated when a recall message, transmitted by that TRACON, is accepted.	3.1.7	3.1.7.6 The system must [STARS-086] initiate and accept manual handoffs of flights between itself and an adjacent Terminal facility. 3.1.7.7 The system must [STARS-087] initiate and accept automatic handoffs of flights, based upon adaptation criteria, between itself and an adjacent Terminal facility.
3.2.1.1.9.3.2.4.4	2	STARS-SSD-00488	When a recall message is accepted from an adjacent TRACON for a handoff where the track was either actively being tracked or was not correlating, the track shall[2] be removed from handoff status and continue to be tracked or remain uncorrelated.	3.1.7	3.1.7.6 The system must [STARS-086] initiate and accept manual handoffs of flights between itself and an adjacent Terminal facility. 3.1.7.7 The system must [STARS-087] initiate and accept automatic handoffs of flights, based upon adaptation criteria, between itself and an adjacent Terminal facility.

3.2.1.1.9.3.2.4.4	3	STARS-SSD-00489	When a recall message is accepted from an adjacent TRACON for a handoff, the corresponding track shall[3] be removed from handoff status and retain its eligibility for auto-acquisition from before handoff initiation.	3.1.7	3.1.7.6 The system must [STARS-086] initiate and accept manual handoffs of flights between itself and an adjacent Terminal facility. 3.1.7.7 The system must [STARS-087] initiate and accept automatic handoffs of flights, based upon adaptation criteria, between itself and an adjacent Terminal facility.
3.2.1.1.9.3.2.5.1	1	STARS-SSD-00490	A Track Update (TU) message shall[1] be automatically generated and transmitted to a receiving ARTCC or adjacent TRACON every time the track position and velocity changes for a non-coasting track that is in handoff until the Transfer Accept message is accepted or the handoff is recalled.	3.1.7	3.1.7.1 The system must [STARS-081] receive and transmit NAS Flight Plan information between STARS and an Air Route Traffic Control Center (ARTCC). 3.1.7.4 The system must [STARS-084] initiate and accept manual handoffs of flights between itself and an ARTCC. 3.1.7.5 The system must [STARS-085] initiate and accept automatic handoffs of flights, based upon adaptation criteria, between itself and an ARTCC. 3.1.7.6 The system must [STARS-086] initiate and accept manual handoffs of flights between itself and an adjacent Terminal facility. 3.1.7.7 The system must [STARS-087] initiate and accept automatic handoffs of flights, based upon adaptation criteria, between itself and an adjacent Terminal facility.

3.2.1.1.9.3.2.5.2	1	STARS-SSD-00491	When adaptation is setup to process IFDT positional information and when a flight in handoff is either not being tracked (handoff coast) or is being tracked the TU positional data shall[1] be used to update the tracks position or for a comparison against the systems position and an adapted distance criterion.	3.1.7	3.1.7.1 The system must [STARS-081] receive and transmit NAS Flight Plan information between STARS and an Air Route Traffic Control Center (ARTCC). 3.1.7.4 The system must [STARS-084] initiate and accept manual handoffs of flights between itself and an ARTCC. 3.1.7.5 The system must [STARS-085] initiate and accept automatic handoffs of flights, based upon adaptation criteria, between itself and an ARTCC. 3.1.7.6 The system must [STARS-086] initiate and accept manual handoffs of flights between itself and an adjacent Terminal facility. 3.1.7.7 The system must [STARS-087] initiate and accept automatic handoffs of flights, based upon adaptation criteria, between itself and an adjacent Terminal facility.
3.2.1.1.9.3.2.6	1	STARS-SSD-00492	When Flight Data Processing Mode is enabled for the ARTCC the system shall[1] send 2 Recall Transfer messages, an adaptable period apart, for each flight in handoff to the ARTCC or adjacent TRACON.	3.1.7	3.1.7.4 The system must [STARS-084] initiate and accept manual handoffs of flights between itself and an ARTCC. 3.1.7.5 The system must [STARS-085] initiate and accept automatic handoffs of flights, based upon adaptation criteria, between itself and an ARTCC. 3.1.7.6 The system must [STARS-086] initiate and accept manual handoffs of flights between itself and an adjacent Terminal facility. 3.1.7.7 The system must [STARS-087] initiate and accept automatic handoffs of flights, based upon adaptation criteria, between itself and an adjacent Terminal facility.

3.2.1.1.9.3.2.6	2	STARS-SSD-00493	Initiate Transfer and Track Update messages shall[2] not be transmitted when the Flight Data Processing Mode is enabled for the ARTCC.	3.1.7	3.1.7.1 The system must [STARS-081] receive and transmit NAS Flight Plan information between STARS and an Air Route Traffic Control Center (ARTCC). 3.1.7.4 The system must [STARS-084] initiate and accept manual handoffs of flights between itself and an ARTCC. 3.1.7.5 The system must [STARS-085] initiate and accept automatic handoffs of flights, based upon adaptation criteria, between itself and an ARTCC.
3.2.1.1.9.3.2.7	1	STARS-SSD-00494	Flow Control Track/Full Data Block Information (TZ) messages shall[1] be transmitted to the ARTCC providing selected track information for all associated tracks controlled by the TAS, at an adaptable rate when TZ message processing has been enabled via keyboard entry and the Traffic Management Unit (TMU) is unavailable.	3.1.7	3.1.7.1 The system must [STARS-081] receive and transmit NAS Flight Plan information between STARS and an Air Route Traffic Control Center (ARTCC).
3.2.1.1.9.3.2.7	2	STARS-SSD-00495	Once a track is no longer controlled by the terminal automation system, the system shall[2] stop sending TZ messages for that track.	3.1.7	3.1.7.4 The system must [STARS-084] initiate and accept manual handoffs of flights between itself and an ARTCC. 3.1.7.5 The system must [STARS-085] initiate and accept automatic handoffs of flights, based upon adaptation criteria, between itself and an ARTCC.
3.2.1.1.9.3.2.8	1	STARS-SSD-00496	An Initiate Transfer, Accept Transfer or Recall Transfer message being transmitted to a non-host ARTCC or adjacent TRACON shall[1] be in accordance with the applicable ICD specified in Section 3.2.1.1.9.3.	3.1.7	3.1.7.4 The system must [STARS-084] initiate and accept manual handoffs of flights between itself and an ARTCC. 3.1.7.5 The system must [STARS-085] initiate and accept automatic handoffs of flights, based upon adaptation criteria, between itself and an ARTCC. 3.1.7.6 The system must [STARS-086] initiate and accept manual handoffs of flights between itself and an adjacent Terminal facility. 3.1.7.7 The system must [STARS-087] initiate and accept automatic handoffs of flights, based upon adaptation criteria, between itself and an adjacent Terminal facility.

3.2.1.1.9.3.2.9	1	STARS-SSD-00497	When a Cancel Transfer message is accepted from an ARTCC for a flight previously in handoff from or to that ARTCC the system shall[1] terminate the handoff or indicate to the TCP that the handoff has been cancelled respectively (OCONUS only).	3.1.7	3.1.7.4 The system must [STARS-084] initiate and accept manual handoffs of flights between itself and an ARTCC. 3.1.7.5 The system must [STARS-085] initiate and accept automatic handoffs of flights, based upon adaptation criteria, between itself and an ARTCC. 3.1.7.6 The system must [STARS-086] initiate and accept manual handoffs of flights between itself and an adjacent Terminal facility. 3.1.7.7 The system must [STARS-087] initiate and accept automatic handoffs of flights, based upon adaptation criteria, between itself and an adjacent Terminal facility.
3.2.1.1.9.3.2.10	1	STARS-SSD-00498	When STARS adaptation indicates that the ARTCC/adjacent TRACON can process interfacility pointouts, an Initiate Pointout message shall[1] be generated and transmitted to an ARTCC or Adjacent TRACON when a TCP performs a pointout action (OCONUS only).	3.1.7	3.1.7.4 The system must [STARS-084] initiate and accept manual handoffs of flights between itself and an ARTCC. 3.1.7.5 The system must [STARS-085] initiate and accept automatic handoffs of flights, based upon adaptation criteria, between itself and an ARTCC. 3.1.7.6 The system must [STARS-086] initiate and accept manual handoffs of flights between itself and an adjacent Terminal facility. 3.1.7.7 The system must [STARS-087] initiate and accept automatic handoffs of flights, based upon adaptation criteria, between itself and an adjacent Terminal facility.

3.2.1.1.9.3.2.10	2	STARS-SSD-00499	When STARS adaptation indicates that the ARTCC/adjacent TRACON can process interfacility pointouts, A pointout action shall[2] commence when an Initiate Pointout message is accepted from that ARTCC or Adjacent TRACON (OCONUS only).	3.1.7	3.1.7.4 The system must [STARS-084] initiate and accept manual handoffs of flights between itself and an ARTCC. 3.1.7.5 The system must [STARS-085] initiate and accept automatic handoffs of flights, based upon adaptation criteria, between itself and an ARTCC. 3.1.7.6 The system must [STARS-086] initiate and accept manual handoffs of flights between itself and an adjacent Terminal facility. 3.1.7.7 The system must [STARS-087] initiate and accept automatic handoffs of flights, based upon adaptation criteria, between itself and an adjacent Terminal facility.
3.2.1.1.9.3.2.11	1	STARS-SSD-00500	An Accept Pointout message shall[1] be transmitted to an ARTCC or an adjacent TRACON, when a TCP performs either a normal or unconditional pointout accept action and, if the action is unconditional, any ARTCC/TRACON response will be discarded (OCONUS only).	3.1.7	3.1.7.4 The system must [STARS-084] initiate and accept manual handoffs of flights between itself and an ARTCC. 3.1.7.5 The system must [STARS-085] initiate and accept automatic handoffs of flights, based upon adaptation criteria, between itself and an ARTCC. 3.1.7.6 The system must [STARS-086] initiate and accept manual handoffs of flights between itself and an adjacent Terminal facility. 3.1.7.7 The system must [STARS-087] initiate and accept automatic handoffs of flights, based upon adaptation criteria, between itself and an adjacent Terminal facility.

3.2.1.1.9.3.2.11	2	STARS-SSD-00501	The pointout of a flight to an ARTCC or Adjacent TRACON shall[2] be indicated to the TCP as accepted when an Accept Pointout message is accepted from that ARTCC or Adjacent TRACON (OCONUS only).	3.1.7	3.1.7.4 The system must [STARS-084] initiate and accept manual handoffs of flights between itself and an ARTCC. 3.1.7.5 The system must [STARS-085] initiate and accept automatic handoffs of flights, based upon adaptation criteria, between itself and an ARTCC. 3.1.7.6 The system must [STARS-086] initiate and accept manual handoffs of flights between itself and an adjacent Terminal facility. 3.1.7.7 The system must [STARS-087] initiate and accept automatic handoffs of flights, based upon adaptation criteria, between itself and an adjacent Terminal facility.
3.2.1.1.9.3.2.12	1	STARS-SSD-00502	A Recall Pointout message shall[1] be transmitted to an ARTCC or an adjacent TRACON, when a TCP performs either a normal or unconditional pointout recall action and, if the action is unconditional, any ARTCC/TRACON response will be discarded (OCONUS only).	3.1.7	3.1.7.4 The system must [STARS-084] initiate and accept manual handoffs of flights between itself and an ARTCC. 3.1.7.5 The system must [STARS-085] initiate and accept automatic handoffs of flights, based upon adaptation criteria, between itself and an ARTCC. 3.1.7.6 The system must [STARS-086] initiate and accept manual handoffs of flights between itself and an adjacent Terminal facility. 3.1.7.7 The system must [STARS-087] initiate and accept automatic handoffs of flights, based upon adaptation criteria, between itself and an adjacent Terminal facility.

3.2.1.1.9.3.2.12	2	STARS-SSD-00503	The pointout of a flight shall[2] be terminated when a Recall Pointout message is accepted from an ARTCC or Adjacent TRACON (OCONUS only).	3.1.7	3.1.7.4 The system must [STARS-084] initiate and accept manual handoffs of flights between itself and an ARTCC. 3.1.7.5 The system must [STARS-085] initiate and accept automatic handoffs of flights, based upon adaptation criteria, between itself and an ARTCC. 3.1.7.6 The system must [STARS-086] initiate and accept manual handoffs of flights between itself and an adjacent Terminal facility. 3.1.7.7 The system must [STARS-087] initiate and accept automatic handoffs of flights, based upon adaptation criteria, between itself and an adjacent Terminal facility.
3.2.1.1.9.3.2.13	1	STARS-SSD-00504	The pointout of a flight from an ARTCC shall[1] be terminated when a Cancel Pointout message is accepted with a notification sent to the sending TCP to indicate the cancellation. (OCONUS only).	3.1.7	3.1.7.4 The system must [STARS-084] initiate and accept manual handoffs of flights between itself and an ARTCC. 3.1.7.5 The system must [STARS-085] initiate and accept automatic handoffs of flights, based upon adaptation criteria, between itself and an ARTCC. 3.1.7.6 The system must [STARS-086] initiate and accept manual handoffs of flights between itself and an adjacent Terminal facility. 3.1.7.7 The system must [STARS-087] initiate and accept automatic handoffs of flights, based upon adaptation criteria, between itself and an adjacent Terminal facility.
3.2.1.1.9.3.3	1	STARS-SSD-00505	Response messages shall[1] be transmitted to the facility which originated the message sequence.	3.1.7	3.1.7.1 The system must [STARS-081] receive and transmit NAS Flight Plan information between STARS and an Air Route Traffic Control Center (ARTCC).

3.2.1.1.9.3.3.2	1	STARS-SSD-00506	An Acceptance Message (DA) shall[1] be generated and transmitted for received Operational Flight Data messages and Initiate, Accept and Recall Transfer messages (NAS) or Initiate, Accept, Cancel and Recall Transfer/Pointout messages (OCONUS) that are formatted in accordance with the applicable ICD specified in Section 3.2.1.1.9.3.	3.1.7	3.1.7.4 The system must [STARS-084] initiate and accept manual handoffs of flights between itself and an ARTCC. 3.1.7.5 The system must [STARS-085] initiate and accept automatic handoffs of flights, based upon adaptation criteria, between itself and an ARTCC. 3.1.7.6 The system must [STARS-086] initiate and accept manual handoffs of flights between itself and an adjacent Terminal facility. 3.1.7.7 The system must [STARS-087] initiate and accept automatic handoffs of flights, based upon adaptation criteria, between itself and an adjacent Terminal facility.
3.2.1.1.9.3.3.2.2	1	STARS-SSD-00507	An Acceptance message shall[1] be transmitted in response to an accepted Departure, Arrival, and Overflight Flight Plans as well as Amendment and Cancellation messages received from an ARTCC.	3.1.7	3.1.7.4 The system must [STARS-084] initiate and accept manual handoffs of flights between itself and an ARTCC. 3.1.7.5 The system must [STARS-085] initiate and accept automatic handoffs of flights, based upon adaptation criteria, between itself and an ARTCC.
3.2.1.1.9.3.3.2.2	2	STARS-SSD-00508	An Acceptance message shall[2] be transmitted in response to an accepted Initiate, Accept and Recall Transfer message (NAS) or Initiate, Accept, Cancel and Recall Transfer/Pointout message (OCONUS) received from an ARTCC or an adjacent TRACON.	3.1.7	3.1.7.4 The system must [STARS-084] initiate and accept manual handoffs of flights between itself and an ARTCC. 3.1.7.5 The system must [STARS-085] initiate and accept automatic handoffs of flights, based upon adaptation criteria, between itself and an ARTCC. 3.1.7.6 The system must [STARS-086] initiate and accept manual handoffs of flights between itself and an adjacent Terminal facility. 3.1.7.7 The system must [STARS-087] initiate and accept automatic handoffs of flights, based upon adaptation criteria, between itself and an adjacent Terminal facility.

3.2.1.1.9.3.3.2.3	1	STARS-SSD-00509	In accordance with the table below, an Acceptance message received from a facility in response to a message that was previously transmitted by the terminal automation system shall[1] signify that that message was accepted by that facility:	3.1.7	3.1.7.4 The system must [STARS-084] initiate and accept manual handoffs of flights between itself and an ARTCC. 3.1.7.5 The system must [STARS-085] initiate and accept automatic handoffs of flights, based upon adaptation criteria, between itself and an ARTCC. 3.1.7.6 The system must [STARS-086] initiate and accept manual handoffs of flights between itself and an adjacent Terminal facility. 3.1.7.7 The system must [STARS-087] initiate and accept automatic handoffs of flights, based upon adaptation criteria, between itself and an adjacent Terminal facility.
3.2.1.1.9.3.3.2.3	2	STARS-SSD-00510	When an Acceptance message is received from an ARTCC or adjacent TRACON in response to an Initiate Transfer or Recall Transfer, the track shall[2] be placed in or removed from handoff status respectively.	3.1.7	3.1.7.4 The system must [STARS-084] initiate and accept manual handoffs of flights between itself and an ARTCC. 3.1.7.5 The system must [STARS-085] initiate and accept automatic handoffs of flights, based upon adaptation criteria, between itself and an ARTCC. 3.1.7.6 The system must [STARS-086] initiate and accept manual handoffs of flights between itself and an adjacent Terminal facility. 3.1.7.7 The system must [STARS-087] initiate and accept automatic handoffs of flights, based upon adaptation criteria, between itself and an adjacent Terminal facility.

3.2.1.1.9.3.3.2.3	3	STARS-SSD-00511	When an Acceptance message is received from an ARTCC or an adjacent TRACON in response to the message type listed for an arrival or an overflight flight plan handoff, and when the track has already acquired or not per the table below, then the track shall[3] continue to be tracked if acquired or be eligible for auto-acquisition if not acquired:	3.1.7	3.1.7.4 The system must [STARS-084] initiate and accept manual handoffs of flights between itself and an ARTCC. 3.1.7.5 The system must [STARS-085] initiate and accept automatic handoffs of flights, based upon adaptation criteria, between itself and an ARTCC. 3.1.7.6 The system must [STARS-086] initiate and accept manual handoffs of flights between itself and an adjacent Terminal facility. 3.1.7.7 The system must [STARS-087] initiate and accept automatic handoffs of flights, based upon adaptation criteria, between itself and an adjacent Terminal facility.
3.2.1.1.9.3.3.2.4	1	STARS-SSD-00512	An Acceptance message shall[1] be transmitted in response to an accepted Non-En Route System Flight Plan, Cancellation, Initiate Transfer, Accept Transfer or Recall Transfer received from an adjacent TRACON	3.1.7	3.1.7.6 The system must [STARS-086] initiate and accept manual handoffs of flights between itself and an adjacent Terminal facility. 3.1.7.7 The system must [STARS-087] initiate and accept automatic handoffs of flights, based upon adaptation criteria, between itself and an adjacent Terminal facility.
3.2.1.1.9.3.3.2.5	1	STARS-SSD-00513	An acceptance message received from an adjacent TRACON, in response to a Non-En Route System Flight Plan, Cancellation, Initiate Transfer, Accept Transfer or Recall Transfer message previously transmitted by the terminal automation system, shall[1] signify that that message was accepted by the TRACON.	3.1.7	3.1.7.6 The system must [STARS-086] initiate and accept manual handoffs of flights between itself and an adjacent Terminal facility. 3.1.7.7 The system must [STARS-087] initiate and accept automatic handoffs of flights, based upon adaptation criteria, between itself and an adjacent Terminal facility.
3.2.1.1.9.3.3.2.5	2	STARS-SSD-00514	When an Acceptance message is received from an adjacent TRACON in response to an Initiate Transfer or Recall Transfer the track shall[2] be placed in or removed from handoff status respectively.	3.1.7	3.1.7.6 The system must [STARS-086] initiate and accept manual handoffs of flights between itself and an adjacent Terminal facility. 3.1.7.7 The system must [STARS-087] initiate and accept automatic handoffs of flights, based upon adaptation criteria, between itself and an adjacent Terminal facility.

3.2.1.1.9.3.3.2.5	3	STARS-SSD-00515	When an Acceptance message is received from an adjacent TRACON in response to an Accept Transfer for an arrival flight plan handoff, then the track shall[3] continue to be tracked based on past track data or be eligible for auto-acquisition according to whether the track has acquired or not respectively.	3.1.7	3.1.7.6 The system must [STARS-086] initiate and accept manual handoffs of flights between itself and an adjacent Terminal facility. 3.1.7.7 The system must [STARS-087] initiate and accept automatic handoffs of flights, based upon adaptation criteria, between itself and an adjacent Terminal facility.
3.2.1.1.9.3.3.3.1.1	1	STARS-SSD-00516	In accordance with table below, a Rejection message shall[1] be transmitted to the specified facility when a message specified below is received from that facility with a format error:	3.1.7	3.1.7.4 The system must [STARS-084] initiate and accept manual handoffs of flights between itself and an ARTCC. 3.1.7.5 The system must [STARS-085] initiate and accept automatic handoffs of flights, based upon adaptation criteria, between itself and an ARTCC. 3.1.7.6 The system must [STARS-086] initiate and accept manual handoffs of flights between itself and an adjacent Terminal facility. 3.1.7.7 The system must [STARS-087] initiate and accept automatic handoffs of flights, based upon adaptation criteria, between itself and an adjacent Terminal facility.
3.2.1.1.9.3.3.3.1.2	1	STARS-SSD-00517	A Rejection Response message shall[1] be transmitted to an ARTCC when an Amendment message is received for a track that is not in the system, has an incorrect TCID, would cause a duplicate ACID condition, has a logic error in field 12 (or 17 if adapted) or has a field 2 or 4 amendment to an active track.	3.1.7	3.1.7.1 The system must [STARS-081] receive and transmit NAS Flight Plan information between STARS and an Air Route Traffic Control Center (ARTCC). 3.1.7.4 The system must [STARS-084] initiate and accept manual handoffs of flights between itself and an ARTCC. 3.1.7.5 The system must [STARS-085] initiate and accept automatic handoffs of flights, based upon adaptation criteria, between itself and an ARTCC.

3.2.1.1.9.3.3.3.1.3	1	STARS-SSD-00518	A Rejection message shall[1] be transmitted to an ARTCC when a Cancellation message is received from that ARTCC for a flight plan that is not in the system, is currently in handoff status or has been under STARS control.	3.1.7	3.1.7.1 The system must [STARS-081] receive and transmit NAS Flight Plan information between STARS and an Air Route Traffic Control Center (ARTCC). 3.1.7.4 The system must [STARS-084] initiate and accept manual handoffs of flights between itself and an ARTCC. 3.1.7.5 The system must [STARS-085] initiate and accept automatic handoffs of flights, based upon adaptation criteria, between itself and an ARTCC.
3.2.1.1.9.3.3.3.1.3	2	STARS-SSD-00519	When Flight Data Processing Mode is enabled for an ARTCC, a Cancellation message received from that ARTCC for a flight which is actively being tracked shall[2] be rejected.	3.1.7	3.1.7.1 The system must [STARS-081] receive and transmit NAS Flight Plan information between STARS and an Air Route Traffic Control Center (ARTCC). 3.1.7.4 The system must [STARS-084] initiate and accept manual handoffs of flights between itself and an ARTCC. 3.1.7.5 The system must [STARS-085] initiate and accept automatic handoffs of flights, based upon adaptation criteria, between itself and an ARTCC.
3.2.1.1.9.3.3.3.1.4	1	STARS-SSD-00520	If adapted, a Rejection message shall[1] be transmitted to an ARTCC when a specified message type is received with a logic error or adaptation mismatch for any of the associated fields below:	3.1.7	3.1.7.1 The system must [STARS-081] receive and transmit NAS Flight Plan information between STARS and an Air Route Traffic Control Center (ARTCC). 3.1.7.4 The system must [STARS-084] initiate and accept manual handoffs of flights between itself and an ARTCC. 3.1.7.5 The system must [STARS-085] initiate and accept automatic handoffs of flights, based upon adaptation criteria, between itself and an ARTCC.

3.2.1.1.9.3.3.3.1.4	2	STARS-SSD-00521	A Rejection message shall[2] be transmitted to an ARTCC when a Flight Plan message is received from that ARTCC with inconsistent ACID, ECID or beacon code information as an existing track, or would cause a duplicate ACID condition to occur in the system, or has the same ACID and ECID as another existing flight plan but would not qualify as a leg for or create a new In-Out-In series.	3.1.7	3.1.7.1 The system must [STARS-081] receive and transmit NAS Flight Plan information between STARS and an Air Route Traffic Control Center (ARTCC). 3.1.7.4 The system must [STARS-084] initiate and accept manual handoffs of flights between itself and an ARTCC. 3.1.7.5 The system must [STARS-085] initiate and accept automatic handoffs of flights, based upon adaptation criteria, between itself and an ARTCC.
3.2.1.1.9.3.3.3.1.5	1	STARS-SSD-00522	A Rejection message (DR) shall[1] be transmitted from the facility type identified when the message type identified is received and the condition identified exists for the applicable location based on the below listing:	3.1.7	3.1.7.1 The system must [STARS-081] receive and transmit NAS Flight Plan information between STARS and an Air Route Traffic Control Center (ARTCC). 3.1.7.4 The system must [STARS-084] initiate and accept manual handoffs of flights between itself and an ARTCC. 3.1.7.5 The system must [STARS-085] initiate and accept automatic handoffs of flights, based upon adaptation criteria, between itself and an ARTCC. 3.1.7.6 The system must [STARS-086] initiate and accept manual handoffs of flights between itself and an adjacent Terminal facility. 3.1.7.7 The system must [STARS-087] initiate and accept automatic handoffs of flights, based upon adaptation criteria, between itself and an adjacent Terminal facility.

3.2.1.1.9.3.3.3.1.6	1	STARS-SSD-00523	When STARS adaptation indicates that the ARTCC/adjacent TRACON can exchange IFDT reject reasons, transmitted Rejection messages shall[1] include the reason for rejection (OCONUS only).	3.1.7	3.1.7.1 The system must [STARS-081] receive and transmit NAS Flight Plan information between STARS and an Air Route Traffic Control Center (ARTCC). 3.1.7.4 The system must [STARS-084] initiate and accept manual handoffs of flights between itself and an ARTCC. 3.1.7.5 The system must [STARS-085] initiate and accept automatic handoffs of flights, based upon adaptation criteria, between itself and an ARTCC. 3.1.7.6 The system must [STARS-086] initiate and accept manual handoffs of flights between itself and an adjacent Terminal facility. 3.1.7.7 The system must [STARS-087] initiate and accept automatic handoffs of flights, based upon adaptation criteria, between itself and an adjacent Terminal facility.
3.2.1.1.9.3.3.3.2	1	STARS-SSD-00524	A message referred to in Rejection response messages received from an ARTCC shall[1] be reported to the MCP.	3.1.7 3.1.11	3.1.7.4 The system must [STARS-084] initiate and accept manual handoffs of flights between itself and an ARTCC. 3.1.7.5 The system must [STARS-085] initiate and accept automatic handoffs of flights, based upon adaptation criteria, between itself and an ARTCC. 3.1.11.2 The system must [STARS-172] continuously record all input and output messages from external sources.

3.2.1.1.9.3.3.3.3	1	STARS-SSD-00525	A Rejection message (DR) shall[1] be transmitted to an adjacent TRACON when a message type specified is received with specified rejection reason:	3.1.7	3.1.7.1 The system must [STARS-081] receive and transmit NAS Flight Plan information between STARS and an Air Route Traffic Control Center (ARTCC). 3.1.7.6 The system must [STARS-086] initiate and accept manual handoffs of flights between itself and an adjacent Terminal facility. 3.1.7.7 The system must [STARS-087] initiate and accept automatic handoffs of flights, based upon adaptation criteria, between itself and an adjacent Terminal facility.
3.2.1.1.9.3.3.3.3	2	STARS-SSD-00526	When Flight Data Processing Mode is enabled for an ARTCC, all Initiate Transfers received from an adjacent TRACON that use that ARTCC for message routing, or a Cancellation message is received for a flight that is actively being tracked shall[2] be rejected.	3.1.7	3.1.7.4 The system must [STARS-084] initiate and accept manual handoffs of flights between itself and an ARTCC. 3.1.7.5 The system must [STARS-085] initiate and accept automatic handoffs of flights, based upon adaptation criteria, between itself and an ARTCC. 3.1.7.6 The system must [STARS-086] initiate and accept manual handoffs of flights between itself and an adjacent Terminal facility. 3.1.7.7 The system must [STARS-087] initiate and accept automatic handoffs of flights, based upon adaptation criteria, between itself and an adjacent Terminal facility.
3.2.1.1.9.3.3.3.4	1	STARS-SSD-00527	A message referred to in a Rejection message (DR) received from an adjacent TRACON shall[1] be reported to the MCP.	3.1.11	3.1.11.2 The system must [STARS-172] continuously record all input and output messages from external sources.
3.2.1.1.9.3.3.4.1	1	STARS-SSD-00528	A Retransmit message shall[1] be transmitted to the facility type specified in response to a specified message received with the error reason specified for the identified system:	3.1.7	3.1.7.1 The system must [STARS-081] receive and transmit NAS Flight Plan information between STARS and an Air Route Traffic Control Center (ARTCC).
3.2.1.1.9.3.4.1	1	STARS-SSD-00529	A Test Data (TR) message shall[1] transmitted to an ARTCC after an adaptable time period has passed since the last acceptable Data Test (DT) or Data Accept (DA) message has been received.	3.1.7	3.1.7.1 The system must [STARS-081] receive and transmit NAS Flight Plan information between STARS and an Air Route Traffic Control Center (ARTCC).

3.2.1.1.9.3.4.2	1	STARS-SSD-00530	A Data Test message shall[1] be transmitted in response to a validated Test Data message received from an ARTCC and contain the same data in its Remarks field as the received message.	3.1.7	3.1.7.1 The system must [STARS-081] receive and transmit NAS Flight Plan information between STARS and an Air Route Traffic Control Center (ARTCC).
3.2.1.1.9.3.4.3	1	STARS-SSD-00531	A Data Test message received from an ARTCC containing a Remarks field that is not identical to the Remarks field of a Test Data (TR) message previously transmitted by the terminal automation system shall[1] be discarded with an interfacility failure generated and reported to the MCP.	3.1.7 3.1.11	3.1.7.1 The system must [STARS-081] receive and transmit NAS Flight Plan information between STARS and an Air Route Traffic Control Center (ARTCC). 3.1.11.2 The system must [STARS-172] continuously record all input and output messages from external sources.
3.2.1.1.9.3.4.4	1	STARS-SSD-00532	When adaptation indicates that the ARTCC can transmit status information and the Test Data message received indicates a failure or that a previous failure has been cleared and the existing interfacility status is the opposite of the new message, the system shall[1] report the new status to the MCP (OCONUS only).	3.1.7 3.1.11	3.1.7.1 The system must [STARS-081] receive and transmit NAS Flight Plan information between STARS and an Air Route Traffic Control Center (ARTCC). 3.1.11.2 The system must [STARS-172] continuously record all input and output messages from external sources.
3.2.1.1.9.3.5	1	STARS-SSD-00533	The Message Type specified shall[1] be discarded if the Reason Message Discarded is satisfied per table below:	3.1.7	3.1.7.1 The system must [STARS-081] receive and transmit NAS Flight Plan information between STARS and an Air Route Traffic Control Center (ARTCC).
3.2.1.1.9.3.5	2	STARS-SSD-00534	CENRAP messages (TS and TP) shall[2] be recognized but ignored without generating error reports.	3.1.7	3.1.7.1 The system must [STARS-081] receive and transmit NAS Flight Plan information between STARS and an Air Route Traffic Control Center (ARTCC).
3.2.1.1.9.3.6.1	1	STARS-SSD-00535	A Retransmit (DX) message shall[1] be discarded when the adaptable number of retransmissions for that message has been exceeded.	3.1.7	3.1.7.1 The system must [STARS-081] receive and transmit NAS Flight Plan information between STARS and an Air Route Traffic Control Center (ARTCC).
3.2.1.1.9.3.6.2.1	1	STARS-SSD-00536	In accordance with the table below, the listed Message Type shall[1] be retransmitted upon receipt of a Retransmit message from an ARTCC if the Retransmission Reason is satisfied and the adaptable number of retransmissions has not been exceeded:	3.1.7	3.1.7.1 The system must [STARS-081] receive and transmit NAS Flight Plan information between STARS and an Air Route Traffic Control Center (ARTCC).
3.2.1.1.9.3.6.2.2	1	STARS-SSD-00537	In accordance with the table below, the listed Message Type shall[1] be retransmitted when no response to it is received within an adaptable period of time, the Retransmission Reason is satisfied and the adaptable number of retransmissions has not been exceeded:	3.1.7	3.1.7.1 The system must [STARS-081] receive and transmit NAS Flight Plan information between STARS and an Air Route Traffic Control Center (ARTCC).

3.2.1.1.9.3.6.3.1	1	STARS-SSD-00538	In accordance with the table below, the listed Message Type shall[1] be retransmitted to an Adjacent TRACON upon receipt of a Retransmit message, the Retransmission Reason is satisfied and the adaptable number of retransmissions has not been exceeded:	3.1.7	3.1.7.1 The system must [STARS-081] receive and transmit NAS Flight Plan information between STARS and an Air Route Traffic Control Center (ARTCC).
3.2.1.1.9.3.6.3.2	1	STARS-SSD-00539	In accordance with the table below, the listed Message Type shall[1] be retransmitted to an Adjacent TRACON when no response to it is received within an adaptable period of time, the Retransmission Reason is satisfied and the adaptable number of retransmissions has not been exceeded:	3.1.7	3.1.7.1 The system must [STARS-081] receive and transmit NAS Flight Plan information between STARS and an Air Route Traffic Control Center (ARTCC).
3.2.1.1.9.3.6.4	1	STARS-SSD-00540	A message that has exceeded the adapted number of retransmissions that may be attempted shall[1] be reported to the MCP.	3.1.11	3.1.11.2 The system must [STARS-172] continuously record all input and output messages from external sources.
3.2.1.1.9.3.7	1	STARS-SSD-00541	Messages containing position and velocity track information shall[1] be transmitted within their current radar scan period. This does not include TZ messages.	3.1.7	3.1.7.1 The system must [STARS-081] receive and transmit NAS Flight Plan information between STARS and an Air Route Traffic Control Center (ARTCC).
3.2.1.1.9.3.7	2	STARS-SSD-00542	Messages requiring responses shall[2] be transmitted without delaying response message transmission to a point where retransmissions occur at an ARTCC.	3.1.7	3.1.7.1 The system must [STARS-081] receive and transmit NAS Flight Plan information between STARS and an Air Route Traffic Control Center (ARTCC).
3.2.1.1.9.3.7	3	STARS-SSD-00543	Transmission of Test Data messages shall[3] have priority over the transmission of other interfacility data messages.	3.1.7	3.1.7.1 The system must [STARS-081] receive and transmit NAS Flight Plan information between STARS and an Air Route Traffic Control Center (ARTCC).
3.2.1.1.9.4	1	STARS-SSD-00544	Traffic Flow Management messages transferred between STARS and the TMU shall[1] be processed as defined in the Standard Terminal Automation Replacement System (STARS) / Traffic Flow Management System (TFMS) ICD, NAS-IC-21052414.	3.1.13	3.1.13.1 The system must [STARS-191] provide aircraft position information to the Traffic Flow Management System (TFMS), in accordance with the Interface Control Document (ICD) in Appendix 3.
3.2.1.1.10.2	1	STARS-SSD-00545	All command entries specified for a TCW or TDW shall[1] be accepted and processed at a corresponding TCP.	3.1.9	3.1.9.8 The system must [STARS-118] perform error checking on all input messages.
3.2.1.1.10.2	2	STARS-SSD-00546	TCP input shall[2] support a repetitive input mode where a command may be repetitively executed with different parameters without re-entering the initiating function key.	3.1.9	3.1.9.7 The system must [STARS-117] allow for the use of context sensitive (implied) functions and user actions.
3.2.1.1.10.2	3	STARS-SSD-00547	TCP input shall[3] support the first character of an ACID and a 2 character abbreviation for an aircraft type entry to automatically be replaced by a corresponding adapted character string or aircraft type respectively.	3.1.9	3.1.9.7 The system must [STARS-117] allow for the use of context sensitive (implied) functions and user actions.

3.2.1.1.10.3	1	STARS-SSD-00548	TCP input shall[1] employ all available context-sensitive information to expedite repetitive system entries.	3.1.9	3.1.9.7 The system must [STARS-117] allow for the use of context sensitive (implied) functions and user actions.
3.2.1.1.10.3	2	STARS-SSD-00549	Based on a defined command priority, when a track is eligible for an implied entry relating to both alert/special condition code acknowledgment and handoff/pointout action, the handoff/pointout action shall[2] be performed.	3.1.7 3.1.9	3.1.7.5 The system must [STARS-085] initiate and accept automatic handoffs of flights, based upon adaptation criteria, between itself and an ARTCC. 3.1.7.7 The system must [STARS-087] initiate and accept automatic handoffs of flights, based upon adaptation criteria, between itself and an adjacent Terminal facility. 3.1.9.7 The system must [STARS-117] allow for the use of context sensitive (implied) functions and user actions.
3.2.1.1.10.3	3	STARS-SSD-00550	The system shall[3] provide the capability to adapt alternate behavior for command input sequences depending on the currently selected configuration plan.	3.1.9	3.1.9.9 The system must [STARS-119] provide for controller retrieval and use of preference sets.
3.2.1.1.10.3	4	STARS-SSD-00551	TCP input containing a one character TCP identifier shall[4] derive the assigned subset based on the priority to use the subset of the first logical TCP assignment, else use the subset of the coupled TCP, if only coupled to one TCP or use the subset of the physical TCP for the entering position.	3.1.9	3.1.9.7 The system must [STARS-117] allow for the use of context sensitive (implied) functions and user actions.

3.2.1.1.10.3	5	STARS-SSD-00552	The priority for an implied slew command shall[5] be as follows: a. Handoff (Accept, Recall or Recall Redirect) b. Pointout (Accept, Recall or Remove Pointout Color or Reject/Cancel Pointout indication) c. Acknowledge Aural Alarm and Steady Blinking Alert d. Steady Blinking Cancelled FP indicator e. Acknowledge Beacon Code Mismatch f. Display Flight Data for Suspended Track g. Remove Duplicate Beacon h. Remove Duplicate Target Address i. Remove Blinking Indicators j. Steady Blinking Warnings k. Remove ACID/Target ID mismatch indicator l. Remove ADB Indicator m. Remove data block color of previously owned track and "RD" redirection indicator if displayed n. Forced Handoff Accept o. Remove Frozen Track not in Alert from Display p. Beacon Code Readout of Associated Track q. Quick Look Track or remove FDB forced by adapted special code r. Initiate Control of Special LDB s. Remove Automatic Acquisition Failure Indication for Unassociated Track t. Beacon Code Readout of Unassociated Track	3.1.9	3.1.9.7 The system must [STARS-117] allow for the use of context sensitive (implied) functions and user actions.
3.2.1.1.10.3.1	1	STARS-SSD-00553	TCP input of an adapted implied compound command sequence for the current configuration shall[1] perform one or more of the following functions based on adapted values for a qualifying track: a. accept an aircraft in handoff to the receiving TCP b. modify scratchpad data c. modify the data block leader line direction d. transfer ownership to another TCP e. display the flight plan in the Readout Area f. modify aircraft type, flight status or flight rules	3.1.7 3.1.9 3.1.10	3.1.7.6 The system must [STARS-086] initiate and accept manual handoffs of flights between itself and an adjacent Terminal facility. 3.1.9.4 The system must [STARS-114] provide the controller with control over flight plan information. 3.1.9.7 The system must [STARS-117] allow for the use of context sensitive (implied) functions and user actions. 3.1.10.10 The system must [STARS-140] display flight plan in¬formation at each TCP.

3.2.1.1.10.3.1	2	STARS-SSD-00554	If adapted, re-entry of an adapted implied compound command sequence shall[2] restore the previous scratchpad and/or leader direction, if applicable, for the track provided they have not been subsequently modified by another command input.	3.1.9	3.1.9.7 The system must [STARS-117] allow for the use of context sensitive (implied) functions and user actions.
3.2.1.1.10.3.1	3	STARS-SSD-00555	Site adaptation shall[3] specify 1 to 4 character implied compound commands.	3.1.9	3.1.9.7 The system must [STARS-117] allow for the use of context sensitive (implied) functions and user actions.
3.2.1.1.10.3.1	4	STARS-SSD-00556	For each implied compound command, site adaptation shall[4] specify in which configuration plan the command is allowed and which tracks qualify for the command based upon the type of flight and optional Entry/Exit fixes, Scratchpad, and/or Airport for the track.	3.1.9	3.1.9.7 The system must [STARS-117] allow for the use of context sensitive (implied) functions and user actions.
3.2.1.1.10.3.1	5	STARS-SSD-00557	For each implied compound command, site adaptation shall[5] optionally specify Scratchpad 1 or 2 text, Leader Direction along with whether the Leader direction applies to the entering TCP or all TCPs where the track is displayed with a full data block, logical TCP, Aircraft Type, Flight Status or Rules and an indication of whether to display the flight plan in the Readout Area.	3.1.9	3.1.9.7 The system must [STARS-117] allow for the use of context sensitive (implied) functions and user actions.
3.2.1.1.10.3.1	6	STARS-SSD-00558	Site adaptation shall[6] specify per TCP whether the implied compound command will update the Scratchpad and Leader Direction for un-owned tracks, and/or accept the handoff for tracks in handoff to this TCP.	3.1.9	3.1.9.7 The system must [STARS-117] allow for the use of context sensitive (implied) functions and user actions.
3.2.1.1.10.4	1	STARS-SSD-00559	Adaptable macro commands shall[1] execute multiple TCP entries via a single command entry.	3.1.9	3.1.9.6 The system must [STARS-116] allow for the control of global system information.
3.2.1.1.10.4	2	STARS-SSD-00560	A macro command shall[2] be capable of being adapted to incorporate existing flight data into command parameters as well as, to include characters from the adapted macro definition in combination with characters from a flight data field.	3.1.9	3.1.9.6 The system must [STARS-116] allow for the control of global system information.
3.2.1.1.10.5.1	1	STARS-SSD-00561	Per adaptation, the entering operator class shall[1] be verified for authority to perform the requested command.	3.1.9	3.1.9.8 The system must [STARS-118] perform error checking on all input messages.
3.2.1.1.10.5.2	1	STARS-SSD-00562	When entered, a logic override shall[1] permit a TCP, even one without airspace assignment, to perform controller actions on an aircraft which is allocated to another TCP for control actions.	3.1.9	3.1.9.3 The system must [STARS-113] provide for controller manipulation of tracked aircraft status.

3.2.1.1.10.5.2	2	STARS-SSD-00563	TCP input from adapted input devices shall[2] perform controller actions on an aircraft which is allocated to another TCP for control actions.	3.1.9	3.1.9.3 The system must [STARS-113] provide for controller manipulation of tracked aircraft status.
3.2.1.1.10.5.3	1	STARS-SSD-00564	Data entered into the system shall[1] be verified for the correct format and within parameter bounds as well as checked for validity.	3.1.9	3.1.9.8 The system must [STARS-118] perform error checking on all input messages.
3.2.1.1.10.5.7	1	STARS-SSD-00565	The TCP shall[1] be notified when making entries involving an aircraft or flight plan with a duplicate beacon code or ACID.	3.1.10	3.1.10.6 The system must [STARS-136] display data entry error messages at each TCP.
3.2.1.1.10.5.7	2	STARS-SSD-00566	TCP input on a track indicating duplicate beacon in its data block shall[2] suppress the duplicate beacon indication.	3.1.9	3.1.9.4 The system must [STARS-114] provide the controller with control over flight plan information.
3.2.1.1.10.5.8	1	STARS-SSD-00567	TCP input will be parsed and compared to input sequences defined in adaptation upon a match the command function associated with that sequence shall[1] be initiated.	3.1.9	3.1.9.8 The system must [STARS-118] perform error checking on all input messages.
3.2.1.1.10.5.8	2	STARS-SSD-00568	The mapping of physical keys to semantic elements shall[2] be adaptable for each style of input set.	3.1.9	3.1.9.8 The system must [STARS-118] perform error checking on all input messages.
3.2.1.1.10.5.9	1	STARS-SSD-00569	When the Multi Track functionality is enabled at the TCP, and a slew entry is ambiguous with respect to track selection, the selection shall[1] be resolved via additional TCP interaction and the selected track indicated prior to command execution.	3.1.9	3.1.9.8 The system must [STARS-118] perform error checking on all input messages.
3.2.1.1.10.5.9	2	STARS-SSD-00570	Any TCP input entered with the left mouse button, while the track is displayed in a Dwell State, shall[2] be applied to the track.	3.1.9	3.1.9.4 The system must [STARS-114] provide the controller with control over flight plan information.
3.2.1.1.10.5.10	1	STARS-SSD-00571	TCP input on a track indicating duplicate Target Address in its data block shall[1] suppress the duplicate Target Address indication.	3.1.9	3.1.9.4 The system must [STARS-114] provide the controller with control over flight plan information.
3.2.1.1.10.6.1.1	1	STARS-SSD-00572	TCP input shall[1] terminate the pointout of a selected aircraft by the pointout initiator.	3.1.9	3.1.9.4 The system must [STARS-114] provide the controller with control over flight plan information.
3.2.1.1.10.6.1.2	1	STARS-SSD-00573	TCP input from the pointout receiver shall[1] accept or reject the pointout (intrafacility only).	3.1.9	3.1.9.4 The system must [STARS-114] provide the controller with control over flight plan information.
3.2.1.1.10.6.1.2	2	STARS-SSD-00574	When the Pointout Accept History Function is enabled in adaptation, the pointout accept history shall[2] contain a list of the most recent TCPs that have accepted a pointout for the track.	3.1.11	3.1.11.3 The system must [STARS-173] record all data necessary to recreate system status, performance, environment, and situation displays.
3.2.1.1.10.6.1.2	3	STARS-SSD-00575	The pointout accept history shall[3] be ordered with the most recent TCP that accepted a pointout being the first entry and proceed until the least recent TCP is entered.	3.1.11	3.1.11.3 The system must [STARS-173] record all data necessary to recreate system status, performance, environment, and situation displays.

3.2.1.1.10.6.1.2	4	STARS-SSD-00576	When a TCP accepts a pointout for a track and the TCP is already in the pointout accept history, the TCP shall[4] be relocated from its current location to the most recent.	3.1.11	3.1.11.3 The system must [STARS-173] record all data necessary to recreate system status, performance, environment, and situation displays.
3.2.1.1.10.6.1.2	5	STARS-SSD-00577	The pointout accept count for a track shall[5] correspond to the number of entries currently in its pointout accept history.	3.1.11	3.1.11.3 The system must [STARS-173] record all data necessary to recreate system status, performance, environment, and situation displays.
3.2.1.1.10.6.1.3	1	STARS-SSD-00578	TCP input on an associated track shall[1] initiate an intrafacility pointout to force a full data block on the TCW or TDW of the specified TCP or, based upon adaptation, initiate an interfacility pointout to an ARTCC/Adjacent TRACON facility or specific TCP.	3.1.9	3.1.9.4 The system must [STARS-114] provide the controller with control over flight plan information.
3.2.1.1.10.6.1.4	1	STARS-SSD-00579	TCP input from the pointout receiver shall[1] transfer ownership to the pointout receiver when an intrafacility pointout is in progress for the specified track.	3.1.9	3.1.9.4 The system must [STARS-114] provide the controller with control over flight plan information.
3.2.1.1.10.6.2.1	1	STARS-SSD-00580	TCP input shall[1] enable, disable or modify auto-acquisition ranges for arrival tracks within one or more geographic areas.	3.1.9	3.1.9.3 The system must [STARS-113] provide for controller manipulation of tracked aircraft status.
3.2.1.1.10.6.2.1	2	STARS-SSD-00581	When no valid track altitude exists, adaptation is set to use the pilot-reported altitude and a manually-entered pilot reported altitude is present the system shall[2] use that altitude to determine whether the aircraft satisfies the altitude criteria for inclusion in the arrival fix area.	3.1.2	3.1.2.1 The system must [STARS-011] automatically track all primary surveillance targets within a geographic area defined by SA parameters. 3.1.2.2 The system must [STARS-012] automatically track all secondary surveillance targets within a geographic area defined by SA parameters.
3.2.1.1.10.6.2.1	3	STARS-SSD-00582	When no valid track altitude exists, and pilot-reported altitude is not present or being used the system shall[3] use an adaptable parameter per individual arrival fix area to determine whether the aircraft satisfies the altitude criteria for inclusion in the arrival fix area.	3.1.2	3.1.2.1 The system must [STARS-011] automatically track all primary surveillance targets within a geographic area defined by SA parameters. 3.1.2.2 The system must [STARS-012] automatically track all secondary surveillance targets within a geographic area defined by SA parameters.
3.2.1.1.10.6.2.2	1	STARS-SSD-00583	TCP input shall[1] manually associate an active track or create an unsupported datablock with flight data based upon ACID, discrete assigned beacon code or data list line identified, and other optionally entered data.	3.1.9	3.1.9.3 The system must [STARS-113] provide for controller manipulation of tracked aircraft status. 3.1.9.4 The system must [STARS-114] provide the controller with control over flight plan information.

3.2.1.1.10.6.2.2	3	STARS-SSD-00584	TCP input shall[3] manually associate an active track that is transmitting a special automatic adapted beacon code with adapted and optionally entered flight data.	3.1.9	3.1.9.3 The system must [STARS-113] provide for controller manipulation of tracked aircraft status. 3.1.9.4 The system must [STARS-114] provide the controller with control over flight plan information.
3.2.1.1.10.6.2.2	4	STARS-SSD-00585	A keyboard entry consisting of a single key followed by a discrete beacon code and an optional type of flight shall[4] create a local flight plan with the following data: a. ACID - adapted string (1 to 3 characters) followed by the entered beacon code b. Assigned beacon - the entered beacon code c. Flight Status – Enroute d. Flight Rules - “E” (default) or entered value e. Coordination time - current time f. other flight data - blank	3.1.9	3.1.9.4 The system must [STARS-114] provide the controller with control over flight plan information.
3.2.1.1.10.6.2.3	1	STARS-SSD-00586	For a track that is not displaying a beacon code mismatch, TCP input shall[1] suspend the display of the track's data block while continuing to display TPA and ATPA indicators.	3.1.9	3.1.9.3 The system must [STARS-113] provide for controller manipulation of tracked aircraft status.
3.2.1.1.10.6.2.3	2	STARS-SSD-00587	For a track that is displaying a beacon code mismatch, TCP input to suspend the display of its data block shall[2] disassociate the track from its flight plan, and cause the flight plan to become suspended but also allow it to remain eligible for re-acquisition.	3.1.9	3.1.9.3 The system must [STARS-113] provide for controller manipulation of tracked aircraft status.
3.2.1.1.10.6.2.3	6	STARS-SSD-00588	TCP input shall[6] enable or inhibit the display of altitude for suspended tracks, and will supersede the adapted setting.	3.1.9	3.1.9.3 The system must [STARS-113] provide for controller manipulation of tracked aircraft status.
3.2.1.1.10.6.2.4	1	STARS-SSD-00589	TCP input shall[1] re-display a suspended track.	3.1.9	3.1.9.3 The system must [STARS-113] provide for controller manipulation of tracked aircraft status.
3.2.1.1.10.6.2.5	1	STARS-SSD-00590	TCP input shall[1] terminate flight data from an active track and remove the display of any TPA J-Ring or Cone or an inactive flight plan including legs of an In-Out-In series if specified.	3.1.9	3.1.9.3 The system must [STARS-113] provide for controller manipulation of tracked aircraft status. 3.1.9.4 The system must [STARS-114] provide the controller with control over flight plan information.
3.2.1.1.10.6.2.6	1	STARS-SSD-00591	TCP input shall[1] terminate all aircraft flight data under the control of a selected position, remove all TPA J-Rings and Cones affected by the entry and terminate flight data regardless of ownership based on coordination time specified.	3.1.9	3.1.9.3 The system must [STARS-113] provide for controller manipulation of tracked aircraft status. 3.1.9.4 The system must [STARS-114] provide the controller with control over flight plan information.

3.2.1.1.10.6.2.7	1	STARS-SSD-00592	TCP input shall[1] transfer flight data from an associated track to an unassociated track or to create an unsupported datablock, or from an unsupported datablock to an unassociated track or to reposition an unsupported datablock.	3.1.9	3.1.9.3 The system must [STARS-113] provide for controller manipulation of tracked aircraft status. 3.1.9.4 The system must [STARS-114] provide the controller with control over flight plan information.
3.2.1.1.10.6.2.7	5	STARS-SSD-00593	TCP input to reposition flight data shall[5] transfer the display or remove any TPA J-Ring or TPA Cone from the associated track to the unassociated track upon track reposition or from the original track respectively.	3.1.9	3.1.9.3 The system must [STARS-113] provide for controller manipulation of tracked aircraft status. 3.1.9.4 The system must [STARS-114] provide the controller with control over flight plan information.
3.2.1.1.10.6.2.8	1	STARS-SSD-00594	TCP input by the track owner (slew/enter) to unfreeze a track that is not in alert shall[1] remove the frozen track from the display and display the flight plan in the Coast/Suspend list.	3.1.9	3.1.9.3 The system must [STARS-113] provide for controller manipulation of tracked aircraft status. 3.1.9.4 The system must [STARS-114] provide the controller with control over flight plan information.
3.2.1.1.10.6.3.1	1	STARS-SSD-00595	TCP input shall[1] initiate a handoff to another position based upon the identification of the next controller position and a specific aircraft, unless there is a beacon code mismatch with the track.	3.1.7	3.1.7.8 The system must [STARS-088] initiate and accept manual handoffs of flights between two TCPs within the facility.
3.2.1.1.10.6.3.1	2	STARS-SSD-00596	Handoff initiation shall[2] be accepted when the flight has been previously handed off and the destination controller is in the same terminal area as the owner of the flight.	3.1.7	3.1.7.8 The system must [STARS-088] initiate and accept manual handoffs of flights between two TCPs within the facility. 3.1.7.9 The system must [STARS-089] initiate and accept automatic handoffs of flights, based upon adaptation criteria, between two TCPs within the facility.

3.2.1.1.10.6.3.1	3	STARS-SSD-00597	Upon acceptance, the original flight owner shall[3] display the track in the Data Block Owned/Previously Owned Blink Color for an adaptable period of time and thereafter it will be displayed similarly to the new owner in the Data Block Owned/Previously Owned Color.	3.1.7 3.1.10	3.1.7.8 The system must [STARS-088] initiate and accept manual handoffs of flights between two TCPs within the facility. 3.1.7.9 The system must [STARS-089] initiate and accept automatic handoffs of flights, based upon adaptation criteria, between two TCPs within the facility. 3.1.10.9 The system must [STARS-139] display aircraft status at each TCP. 3.1.10.11 The system must [STARS-141] display aircraft information in the form of data blocks. 3.1.10.13 The system must [STARS-143] automatically initiate transfer of data block information to the receiving controller, either intra- or inter-facility, when site adaptable parameters are satisfied.

3.2.1.1.10.6.3.2	1	STARS-SSD-00598	TCP input shall[1] recall a handoff based upon identification of the aircraft by the owning TCP.	3.1.7 3.1.9	3.1.7.4 The system must [STARS-084] initiate and accept manual handoffs of flights between itself and an ARTCC. 3.1.7.5 The system must [STARS-085] initiate and accept automatic handoffs of flights, based upon adaptation criteria, between itself and an ARTCC. 3.1.7.6 The system must [STARS-086] initiate and accept manual handoffs of flights between itself and an adjacent Terminal facility. 3.1.7.7 The system must [STARS-087] initiate and accept automatic handoffs of flights, based upon adaptation criteria, between itself and an adjacent Terminal facility. 3.1.7.8 The system must [STARS-088] initiate and accept manual handoffs of flights between two TCPs within the facility. 3.1.7.9 The system must [STARS-089] initiate and accept automatic handoffs of flights, based upon adaptation criteria, between two TCPs within the facility. 3.1.9.3 The system must [STARS-113] provide for controller manipulation of tracked aircraft status.

3.2.1.1.10.6.3.3	1	STARS-SSD-00599	TCP input shall[1] unconditionally recall an aircraft in handoff based upon identification of the aircraft by the sending TCP.	3.1.7 3.1.9	3.1.7.4 The system must [STARS-084] initiate and accept manual handoffs of flights between itself and an ARTCC. 3.1.7.5 The system must [STARS-085] initiate and accept automatic handoffs of flights, based upon adaptation criteria, between itself and an ARTCC. 3.1.7.6 The system must [STARS-086] initiate and accept manual handoffs of flights between itself and an adjacent Terminal facility. 3.1.7.7 The system must [STARS-087] initiate and accept automatic handoffs of flights, based upon adaptation criteria, between itself and an adjacent Terminal facility. 3.1.7.8 The system must [STARS-088] initiate and accept manual handoffs of flights between two TCPs within the facility. 3.1.7.9 The system must [STARS-089] initiate and accept automatic handoffs of flights, based upon adaptation criteria, between two TCPs within the facility. 3.1.9.3 The system must [STARS-113] provide for controller manipulation of tracked aircraft status.
3.2.1.1.10.6.3.4	1	STARS-SSD-00600	TCP input shall[1] accept an aircraft in handoff based on either identification of the aircraft by the receiving TCP, nearest proximity to adapted position or if intrafacility type identification of aircraft using command override.	3.1.7 3.1.9	3.1.7.4 The system must [STARS-084] initiate and accept manual handoffs of flights between itself and an ARTCC. 3.1.7.6 The system must [STARS-086] initiate and accept manual handoffs of flights between itself and an adjacent Terminal facility. 3.1.7.8 The system must [STARS-088] initiate and accept manual handoffs of flights between two TCPs within the facility. 3.1.9.3 The system must [STARS-113] provide for controller manipulation of tracked aircraft status.

3.2.1.1.10.6.3.5	1	STARS-SSD-00601	TCP input shall[1] unconditionally accept an aircraft in handoff based upon identification of the aircraft by the receiving TCP, change the position symbol of an externally owned aircraft to the pending local owner if the flight is not in handoff or based on adaptation, also display the ARTCC symbol in the full data block if the flight is not in handoff.	3.1.7 3.1.9	3.1.7.4 The system must [STARS-084] initiate and accept manual handoffs of flights between itself and an ARTCC. 3.1.7.6 The system must [STARS-086] initiate and accept manual handoffs of flights between itself and an adjacent Terminal facility. 3.1.7.8 The system must [STARS-088] initiate and accept manual handoffs of flights between two TCPs within the facility. 3.1.9.3 The system must [STARS-113] provide for controller manipulation of tracked aircraft status.
3.2.1.1.10.6.3.6	1	STARS-SSD-00602	Automatic handoff for either a specific aircraft or an entire TCP shall[1] be enabled or disabled via a TCP entry for Interfacility and Intrafacility processing.	3.1.9	3.1.9.3 The system must [STARS-113] provide for controller manipulation of tracked aircraft status.
3.2.1.1.10.6.3.7	1	STARS-SSD-00603	If enabled via adaptation, TCP input shall[1] redirect an Interfacility or Intrafacility handoff to a specified TCP.	3.1.9	3.1.9.3 The system must [STARS-113] provide for controller manipulation of tracked aircraft status.

3.2.1.1.10.6.3.7	3	STARS-SSD-00604	TCP input shall[3] recall a redirected handoff to the initial originator and clear all handoff indicators or to the last position to redirect a handoff and place the track in handoff to that position.	3.1.7 3.1.9	3.1.7.4 The system must [STARS-084] initiate and accept manual handoffs of flights between itself and an ARTCC. 3.1.7.5 The system must [STARS-085] initiate and accept automatic handoffs of flights, based upon adaptation criteria, between itself and an ARTCC. 3.1.7.6 The system must [STARS-086] initiate and accept manual handoffs of flights between itself and an adjacent Terminal facility. 3.1.7.7 The system must [STARS-087] initiate and accept automatic handoffs of flights, based upon adaptation criteria, between itself and an adjacent Terminal facility. 3.1.7.8 The system must [STARS-088] initiate and accept manual handoffs of flights between two TCPs within the facility. 3.1.7.9 The system must [STARS-089] initiate and accept automatic handoffs of flights, based upon adaptation criteria, between two TCPs within the facility. 3.1.9.3 The system must [STARS-113] provide for controller manipulation of tracked aircraft status.
3.2.1.1.10.6.3.8	1	STARS-SSD-00605	TCP input shall[1] based on adaptation, transfer ownership of a specified flight to the second or third keyboard at the current owner's TCW/TDW.	3.1.9	3.1.9.3 The system must [STARS-113] provide for controller manipulation of tracked aircraft status.
3.2.1.1.10.6.4	1	STARS-SSD-00606	TCP input shall[1] request range and heading from a selected aircraft to a specified fix or airport.	3.1.9	3.1.9.4 The system must [STARS-114] provide the controller with control over flight plan information.
3.2.1.1.10.6.5	1	STARS-SSD-00607	TCP input shall[1] toggle an associated track between a full datablock and a partial datablock from an unowned position.	3.1.9	3.1.9.4 The system must [STARS-114] provide the controller with control over flight plan information.

3.2.1.1.10.6.5	2	STARS-SSD-00608	TCP input to force pointout an associated track shall[2] cause it to display a full data block, on the entered TCP(s), as follows: a. At the track owner's position will remain displayed in the adapted Data Block Owned color unless adapted to allow owner pointouts to themselves and the enterer is the track owner. b. At the track owner's position when adapted to allow owner pointouts to themselves and the enterer is the track owner, the data block will be displayed in the pointout accepted state. c. At the non-owning positions the data block will be displayed in the pointout accepted state.	3.1.9	3.1.9.3 The system must [STARS-113] provide for controller manipulation of tracked aircraft status.
3.2.1.1.10.6.5	3	STARS-SSD-00609	TCP input shall[3] enable/disable the display of an adapted data block type subject to a combination of adapted conditions.	3.1.9	3.1.9.5 The system must [STARS-115] provide a controller with the ability to manipulate the presentation of information on an individual situation display.
3.2.1.1.10.6.5	4	STARS-SSD-00610	Except for the flight plan owner's position, TCP input shall[4] cause a full data block to be displayed in the pointout accepted state for a track, on a TCP of the entered adaptable group or "ALL" TCPs.	3.1.9	3.1.9.3 The system must [STARS-113] provide for controller manipulation of tracked aircraft status.
3.2.1.1.10.6.5	5	STARS-SSD-00611	TCP input shall[5] remove the pointout accepted state from an associated track, leaving the full datablock in a non-pointout color at the entering TCP.	3.1.9	3.1.9.3 The system must [STARS-113] provide for controller manipulation of tracked aircraft status.
3.2.1.1.10.6.5	6	STARS-SSD-00612	TCP input to force a pointout of an unassociated flight plan shall[6] cause it to display a full data block in the adapted Data Block Owned color or pointout accepted state, depending upon ownership, after it becomes associated on the entered TCP(s).	3.1.9	3.1.9.3 The system must [STARS-113] provide for controller manipulation of tracked aircraft status. 3.1.9.4 The system must [STARS-114] provide the controller with control over flight plan information. 3.1.9.5 The system must [STARS-115] provide a controller with the ability to manipulate the presentation of information on an individual situation display.
3.2.1.1.10.6.5	8	STARS-SSD-00613	When TCP input has identified an associated or unassociated flight to be displayed in a pointout accepted state, after it associates if necessary, the full data block shall[8] be displayed at the entered TCP unless the TCP is the track owner.	3.1.9	3.1.9.3 The system must [STARS-113] provide for controller manipulation of tracked aircraft status.

3.2.1.1.10.6.6	1	STARS-SSD-00614	TCP input shall[1] enable/disable the display of PTLs that indicate a track's current speed and heading .	3.1.9	3.1.9.5 The system must [STARS-115] provide a controller with the ability to manipulate the presentation of information on an individual situation display.
3.2.1.1.10.6.6	2	STARS-SSD-00615	TCP input shall[2] adjust the prediction time up to 5 minutes ahead, except in FMA mode which will be limited by Caution alert times.	3.1.9	3.1.9.5 The system must [STARS-115] provide a controller with the ability to manipulate the presentation of information on an individual situation display.
3.2.1.1.10.6.7	1	STARS-SSD-00616	TCP input shall[1] activate/deactivate a minimum separation calculation or a TPA J-Ring or Cone for a designated pair of tracks.	3.1.9	3.1.9.5 The system must [STARS-115] provide a controller with the ability to manipulate the presentation of information on an individual situation display.
3.2.1.1.10.6.7	2	STARS-SSD-00617	Calculation results shall[2] be displayed in nautical miles with two digits to the right of the decimal point.	3.1.10	3.1.10.15 The system must [STARS-145] display range marks.
3.2.1.1.10.6.7	4	STARS-SSD-00618	TCP input shall[4] adjust the radius of the TPA J-Ring or Cones from 1 to 30 nautical miles incrementally.	3.1.9	3.1.9.5 The system must [STARS-115] provide a controller with the ability to manipulate the presentation of information on an individual situation display.
3.2.1.1.10.6.7	5	STARS-SSD-00619	The TPA J-Ring or Cone shall[5] be drawn as a circle or circular sector with the origin at the track position using the specified radius and if a Cone an arc centered at the track's heading.	3.1.10	3.1.10.9 The system must [STARS-139] display aircraft status at each TCP.
3.2.1.1.10.6.7	7	STARS-SSD-00620	Display of a TPA cone shall[7] be inhibited when the track is stationary.	3.1.10	3.1.10.9 The system must [STARS-139] display aircraft status at each TCP.
3.2.1.1.10.6.7	8	STARS-SSD-00621	TCP input shall[8] remove the display of TPA J-Rings or Cones from all tracks on the display.	3.1.9	3.1.9.5 The system must [STARS-115] provide a controller with the ability to manipulate the presentation of information on an individual situation display.
3.2.1.1.10.6.7	10	STARS-SSD-00622	TCP input shall[10] enable or inhibit the display of the radius on a single or all track(s) displaying a TPA/ATPA information on the display.	3.1.9	3.1.9.5 The system must [STARS-115] provide a controller with the ability to manipulate the presentation of information on an individual situation display.
3.2.1.1.10.6.7	12	STARS-SSD-00623	The display of a TPA/ATPA information shall[12] be removed at all displays when a track is disassociated from its flight plan and the display of a TPA J-Ring and TPA Cone restored when it re-associates.	3.1.10	3.1.10.9 The system must [STARS-139] display aircraft status at each TCP.
3.2.1.1.10.6.7	14	STARS-SSD-00624	The display of a TPA/ATPA information shall[14] be prohibited for a track when predefined conditions are met.	3.1.10	3.1.10.9 The system must [STARS-139] display aircraft status at each TCP.

3.2.1.1.10.6.7	16	STARS-SSD-00625	Each display shall[16] support a combined total of up to 50 TPA J-Rings, TPA Cones, ATPA Monitor Cones, ATPA Warning Cones, and ATPA Alert Cones.	3.1.10	3.1.10.9 The system must [STARS-139] display aircraft status at each TCP.
3.2.1.1.10.6.7	17	STARS-SSD-00626	When the number of TPA J-Rings and TPA/ATPA Cones has reached capacity at a display and an ATPA Warning or ATPA Alert Cone becomes eligible for display, an existing TPA J-Ring or TPA/ATPA Cone shall[17] be removed from the display based on a priority scheme.	3.1.10	3.1.10.9 The system must [STARS-139] display aircraft status at each TCP.
3.2.1.1.10.6.7.1	1	STARS-SSD-00627	TCP input shall[1] enable or disable ATPA system-wide, send a status message to the MCP and when enabled set up ATPA with adapted parameters.	3.1.2 3.1.9	3.1.2.10 The system must [STARS-020] provide tracking data for the Automatic Terminal Proximity Alert (ATPA). 3.1.9.5 The system must [STARS-115] provide a controller with the ability to manipulate the presentation of information on an individual situation display.
3.2.1.1.10.6.7.1	4	STARS-SSD-00628	If ATPA is enabled, TCP input shall[4] enable or disable an ATPA Approach Volume system-wide, send a status message to the MCP and when enabled set up 2.5 nmi Reduced Separation and Landing Speed Offset per adaptation parameters.	3.1.2 3.1.9	3.1.2.10 The system must [STARS-020] provide tracking data for the Automatic Terminal Proximity Alert (ATPA). 3.1.9.5 The system must [STARS-115] provide a controller with the ability to manipulate the presentation of information on an individual situation display.
3.2.1.1.10.6.7.1	7	STARS-SSD-00629	If ATPA is enabled and a 2.5 nmi Reduced Separation is adapted for the enabled ATPA Approach Volume, TCP input shall[7] enable or disable the 2.5 nmi Reduced Separation system-wide and send a status message to the MCP.	3.1.2 3.1.9	3.1.2.10 The system must [STARS-020] provide tracking data for the Automatic Terminal Proximity Alert (ATPA). 3.1.9.5 The system must [STARS-115] provide a controller with the ability to manipulate the presentation of information on an individual situation display.
3.2.1.1.10.6.7.1	9	STARS-SSD-00630	If ATPA is enabled system-wide, TCP input shall[9] enable or inhibit the display of ATPA Warning and Alert Cones at the enterer's display, send a status message to the MCP and set each track that qualifies for a warning or alert to the same state.	3.1.2 3.1.9	3.1.2.10 The system must [STARS-020] provide tracking data for the Automatic Terminal Proximity Alert (ATPA). 3.1.9.5 The system must [STARS-115] provide a controller with the ability to manipulate the presentation of information on an individual situation display.

3.2.1.1.10.6.7.1	12	STARS-SSD-00631	If ATPA is enabled system-wide, TCP input shall[12] enable or inhibit the display of ATPA Monitor Cones or In-Trail Distance at the enterer's display and send a status message to the MCP.	3.1.2 3.1.9	3.1.2.10 The system must [STARS-020] provide tracking data for the Automatic Terminal Proximity Alert (ATPA). 3.1.9.5 The system must [STARS-115] provide a controller with the ability to manipulate the presentation of information on an individual situation display.
3.2.1.1.10.6.7.1	16	STARS-SSD-00632	TCP input shall[16] enable or inhibit the display of ATPA Warning and Alert Cones for an associated track at the enterer's display when specific conditions are met and will send a status message to the MCP.	3.1.2 3.1.9	3.1.2.10 The system must [STARS-020] provide tracking data for the Automatic Terminal Proximity Alert (ATPA). 3.1.9.5 The system must [STARS-115] provide a controller with the ability to manipulate the presentation of information on an individual situation display.
3.2.1.1.10.6.7.1	18	STARS-SSD-00633	TCP input to inhibit or enable the display of ATPA Warning and Alert Cones for an associated track at the enterer's display shall[18] set the track to be eligible to display *TPA or remove the track's eligibility to display *TPA, respectively, at the enterer's display.	3.1.2 3.1.9	3.1.2.10 The system must [STARS-020] provide tracking data for the Automatic Terminal Proximity Alert (ATPA). 3.1.9.5 The system must [STARS-115] provide a controller with the ability to manipulate the presentation of information on an individual situation display.
3.2.1.1.10.6.7.1	20	STARS-SSD-00634	If ATPA is enabled system-wide, TCP input shall[20] display in the Readout Area disabled ATPA Approach Volumes that have been disabled by TCP input since the last configuration change.	3.1.2 3.1.9	3.1.2.10 The system must [STARS-020] provide tracking data for the Automatic Terminal Proximity Alert (ATPA). 3.1.9.5 The system must [STARS-115] provide a controller with the ability to manipulate the presentation of information on an individual situation display.
3.2.1.1.10.6.7.1	21	STARS-SSD-00635	TCP input shall[21] enable or inhibit the display of ATPA Monitor Cones for an associated track at the enterer's display when specific conditions are met and will send a status message to the MCP.	3.1.2 3.1.9	3.1.2.10 The system must [STARS-020] provide tracking data for the Automatic Terminal Proximity Alert (ATPA). 3.1.9.5 The system must [STARS-115] provide a controller with the ability to manipulate the presentation of information on an individual situation display.

3.2.1.1.10.6.7.1	23	STARS-SSD-00636	TCP input shall[23] enable or inhibit the display of ATPA In-Trail Distance for an associated track at the enterer's display when specific conditions are met and will send a status message to the MCP.	3.1.2 3.1.9	3.1.2.10 The system must [STARS-020] provide tracking data for the Automatic Terminal Proximity Alert (ATPA). 3.1.9.5 The system must [STARS-115] provide a controller with the ability to manipulate the presentation of information on an individual situation display.
3.2.1.1.10.6.7.1	25	STARS-SSD-00637	TCP input to enable or inhibit the display of ATPA Monitor Cones or In-Trail Distance at the enterer's display shall[25] set the display of ATPA Monitor Cones or In-Trail Distance for each track that qualifies at the enterer's display to the same state.	3.1.2 3.1.9	3.1.2.10 The system must [STARS-020] provide tracking data for the Automatic Terminal Proximity Alert (ATPA). 3.1.9.5 The system must [STARS-115] provide a controller with the ability to manipulate the presentation of information on an individual situation display.
3.2.1.1.10.6.7.1	27	STARS-SSD-00638	If ATPA is enabled system-wide, TCP input for an associated track shall[27] enable or inhibit the override of ATPA eligibility criteria, and send a status message to the MCP.	3.1.2 3.1.9	3.1.2.10 The system must [STARS-020] provide tracking data for the Automatic Terminal Proximity Alert (ATPA). 3.1.9.5 The system must [STARS-115] provide a controller with the ability to manipulate the presentation of information on an individual situation display.
3.2.1.1.10.6.8	1	STARS-SSD-00639	TCP input shall[1] acknowledge a LA/CA/MCI or transponder indicator condition at the entering TCP to cause blinking and aural indications to cease.	3.1.9 3.1.10	3.1.9.3 The system must [STARS-113] provide for controller manipulation of tracked aircraft status. 3.1.10.25 The system must [STARS-155] generate visual alerts based upon the adaptation of each individual facility. 3.1.10.26 The system must [STARS-156] generate aural alarms based upon the adaptation of each individual TCP.
3.2.1.1.10.6.8	3	STARS-SSD-00640	A distinct TCP input shall[3] acknowledge system–wide a transponder indicator condition for an unassociated track.	3.1.9	3.1.9.3 The system must [STARS-113] provide for controller manipulation of tracked aircraft status.
3.2.1.1.10.6.8	4	STARS-SSD-00641	TCP input shall[4] declare or delete emergency, hijack, or radio failure condition for an associated track not squawking an equivalent beacon code.	3.1.9	3.1.9.3 The system must [STARS-113] provide for controller manipulation of tracked aircraft status.

3.2.1.1.10.6.8	5	STARS-SSD-00642	When the tracks involved in the condition being acknowledged are owned by the entering position, then the acknowledgement shall[5] apply at all TCP positions where the alarm/alert is displayed and/or aurally indicated.	3.1.9 3.1.10	3.1.9.3 The system must [STARS-113] provide for controller manipulation of tracked aircraft status. 3.1.10.25 The system must [STARS-155] generate visual alerts based upon the adaptation of each individual facility. 3.1.10.26 The system must [STARS-156] generate aural alarms based upon the adaptation of each individual TCP.
3.2.1.1.10.6.8	6	STARS-SSD-00643	TCP input shall[6] declare or delete an adapted special condition for an associated track if the track is not already transmitting a special condition code and the track is owned at this display.	3.1.9	3.1.9.3 The system must [STARS-113] provide for controller manipulation of tracked aircraft status.
3.2.1.1.10.6.8	7	STARS-SSD-00644	TCP input shall[7] acknowledge a Wrong Airport alert at the entering TCW/TDW to cause aural indications to cease.	3.1.9	3.1.9.3 The system must [STARS-113] provide for controller manipulation of tracked aircraft status.
3.2.1.1.10.6.9	1	STARS-SSD-00645	TCP input shall[1] request display of all enabled RNAV Status Delete Regions in the preview area until the area is full at which time the word “MORE” is displayed and depressing ENTER will display the remaining regions.	3.1.9	3.1.9.5 The system must [STARS-115] provide a controller with the ability to manipulate the pre-sentation of information on an individual situation display.
3.2.1.1.10.6.10	1	STARS-SSD-00646	When aircraft type is displayed in the full data block as a timeshared field, TCP input shall[1] inhibit display of aircraft type in the full data block of the specified track.	3.1.9 3.1.10	3.1.9.5 The system must [STARS-115] provide a controller with the ability to manipulate the presentation of information on an individual situation display. 3.1.10.10 The system must [STARS-140] display flight plan information at each TCP. 3.1.10.11 The system must [STARS-141] display aircraft information in the form of data blocks.

3.2.1.1.10.6.10	2	STARS-SSD-00647	When aircraft type is suppressed or inhibited from display in the full data block, TCP input by a position that is or is not the track owner or is or is not a position coupled to the track owner shall[2] force the display of aircraft type without timesharing in the full data block of the specified track system-wide or at the enterer's display respectively for an adaptable interval.	3.1.9 3.1.10	3.1.9.5 The system must [STARS-115] provide a controller with the ability to manipulate the presentation of information on an individual situation display. 3.1.10.10 The system must [STARS-140] display flight plan information at each TCP. 3.1.10.11 The system must [STARS-141] display aircraft information in the form of data blocks.
3.2.1.1.10.6.11	1	STARS-SSD-00648	If enabled through site adaptation, TCP input shall[1] enable/disable the display of the ADS-B/Non ADS-B indicators in the data block.	3.1.9 3.1.10	3.1.9.5 The system must [STARS-115] provide a controller with the ability to manipulate the presentation of information on an individual situation display. 3.1.10.10 The system must [STARS-140] display flight plan information at each TCP. 3.1.10.11 The system must [STARS-141] display aircraft information in the form of data blocks.
3.2.1.1.10.6.12	1	STARS-SSD-00649	TCP input in EFS workstation mode shall[1] delete the ACID from the data block for an unassociated track that displays the ACID received from FSL.	3.1.9 3.1.10	3.1.9.4 The system must [STARS-114] provide the controller with control over flight plan information. 3.1.9.5 The system must [STARS-115] provide a controller with the ability to manipulate the presentation of information on an individual situation display. 3.1.10.10 The system must [STARS-140] display flight plan information at each TCP. 3.1.10.11 The system must [STARS-141] display aircraft information in the form of data blocks.
3.2.1.1.10.6.12	2	STARS-SSD-00650	If an existing code/callsign pair is not received from FSL for a design period of time, and no track exists with a matching discrete beacon code, the ACID shall [2] be deleted.	3.1.7	3.1.7.2 The system must [STARS-082] process Arrival, Departure, and Overflight Flight Plans generated internally by an adjacent Terminal facility. 3.1.7.3 The system must [STARS-083] process Arrival, Departure, and Overflight Flight Plans generated internally by an ARTCC.

3.2.1.1.10.6.12	3	STARS-SSD-00651	TCP input at a workstation in DSA mode shall[3] delete the ACID from the data block for an unassociated track that is displaying an ACID, thereby removing the code/callsign association of the track with the discrete beacon code and displaying a limited data block (STARS ELITE only).	3.1.9	3.1.9.4 The system must [STARS-114] provide the controller with control over flight plan information.
3.2.1.1.10.6.13	1	STARS-SSD-00652	TCP input shall[1] either enable/disable the display of requested altitude in the data block for a single track or all tracks at the entering TCP.	3.1.9 3.1.10	3.1.9.5 The system must [STARS-115] provide a controller with the ability to manipulate the presentation of information on an individual situation display. 3.1.10.10 The system must [STARS-140] display flight plan information at each TCP. 3.1.10.11 The system must [STARS-141] display aircraft information in the form of data blocks.
3.2.1.1.10.7.1	1	STARS-SSD-00653	TCP input shall[1] generate a flight plan for a selected aircraft using the existing data block information.	3.1.9	3.1.9.4 The system must [STARS-114] provide the controller with control over flight plan information.
3.2.1.1.10.7.1	2	STARS-SSD-00654	TCP input shall[2] support a quick ACID entry mode allowing a flight ACID to be created using adapted characters followed by two automatically generated numeric characters.	3.1.9	3.1.9.4 The system must [STARS-114] provide the controller with control over flight plan information.
3.2.1.1.10.7.1	3	STARS-SSD-00655	Adaptation data shall[3] specify if the automatic flight plan created by shall's above are displayed in the pointout accepted state.	3.1.10	3.1.10.9 The system must [STARS-139] display aircraft status at each TCP.
3.2.1.1.10.7.2	1	STARS-SSD-00656	TCP input shall[1] display flight data for either a selected aircraft, or all legs in a selected In-Out-In series.	3.1.9 3.1.10	3.1.9.4 The system must [STARS-114] provide the controller with control over flight plan information. 3.1.10.10 The system must [STARS-140] display flight plan in¬formation at each TCP.
3.2.1.1.10.7.2	2	STARS-SSD-00657	A TCP input (slew, enter) that selects a suspended track shall[2] display flight data for the selected track.	3.1.9 3.1.10	3.1.9.4 The system must [STARS-114] provide the controller with control over flight plan information. 3.1.10.10 The system must [STARS-140] display flight plan in¬formation at each TCP.
3.2.1.1.10.7.3	1	STARS-SSD-00658	TCP input shall[1] enter intrafacility flight data consisting of an ACID and several optional fields.	3.1.9	3.1.9.4 The system must [STARS-114] provide the controller with control over flight plan information.
3.2.1.1.10.7.3	2	STARS-SSD-00659	TCP input of an adapted airport mnemonic in scratchpad 1 or 2 shall[2] set the flight's exit fix to the airport if fix data is not entered.	3.1.9	3.1.9.4 The system must [STARS-114] provide the controller with control over flight plan information.

3.2.1.1.10.7.3	3	STARS-SSD-00660	When TCP input has entered flight data without specifying the adapted default scratchpad the software shall[3] automatically assign the data for that scratchpad with the default data that matches the active configuration for the flights owner.	3.1.9	3.1.9.4 The system must [STARS-114] provide the controller with control over flight plan information.
3.2.1.1.10.7.3	4	STARS-SSD-00661	For each TCP entered flight plan, the system shall[4] derive an aircraft category or an RNAV symbol, and then derive a weight class or set the weight class to Unknown.	3.1.9	3.1.9.4 The system must [STARS-114] provide the controller with control over flight plan information.
3.2.1.1.10.7.3	5	STARS-SSD-00662	TCP entry of entry/exit fix data, flight status and airport for intrafacility flight data entry shall[5] be accepted in abbreviated form where the entry and/or exit fix point, flight status and airport is entered as a single character that is adapted to identify corresponding data.	3.1.9	3.1.9.4 The system must [STARS-114] provide the controller with control over flight plan information.
3.2.1.1.10.7.4	1	STARS-SSD-00663	TCP input shall[1] allow the modification of intrafacility flight data for an aircraft identified by the ACID, discrete beacon code, pointer selection or data list line identifier.	3.1.9	3.1.9.4 The system must [STARS-114] provide the controller with control over flight plan information.
3.2.1.1.10.7.4	2	STARS-SSD-00664	TCP input of an implied form shall[2] allow the modification of intrafacility flight data for an aircraft identified by pointer selection.	3.1.9	3.1.9.4 The system must [STARS-114] provide the controller with control over flight plan information.
3.2.1.1.10.7.4	3	STARS-SSD-00665	A single TCP input shall[3] allow the modification of intrafacility flight data for an aircraft identified by pointer selection.	3.1.9	3.1.9.4 The system must [STARS-114] provide the controller with control over flight plan information.
3.2.1.1.10.7.4	4	STARS-SSD-00666	When none of the legs of an In-Out-In series are active, TCP input shall[4] modify all legs if the ACID or beacon code fields are modified for any of the legs.	3.1.9	3.1.9.4 The system must [STARS-114] provide the controller with control over flight plan information.
3.2.1.1.10.7.4	5	STARS-SSD-00667	TCP input to update the beacon code of an active or inactive leg of an In-Out-In series shall[5] respectively either modify all legs of the series or none if another leg is active.	3.1.9	3.1.9.4 The system must [STARS-114] provide the controller with control over flight plan information.
3.2.1.1.10.7.4	7	STARS-SSD-00668	TCP input to update the ACID of a leg of an In-Out-In series shall[7] be rejected if any of the legs are active.	3.1.9	3.1.9.4 The system must [STARS-114] provide the controller with control over flight plan information.
3.2.1.1.10.7.4	8	STARS-SSD-00669	TCP input to update the coordination time of any inactive leg of an In-Out-In series shall[8] cause its deletion timer to be re-initiated.	3.1.9	3.1.9.3 The system must [STARS-113] provide for controller manipulation of tracked aircraft status. 3.1.9.4 The system must [STARS-114] provide the controller with control over flight plan information.

3.2.1.1.10.7.4	9	STARS-SSD-00670	TCP input of an adapted airport mnemonic in scratchpad 1 or 2 for an associated or unassociated flight plan shall[9] respectively either set its exit fix to the airport and the flight type to arrival or set its exit fix to the airport if fix data is not entered.	3.1.9	3.1.9.4 The system must [STARS-114] provide the controller with control over flight plan information.
3.2.1.1.10.7.4	11	STARS-SSD-00671	When TCP input has entered flight data for an inactive flight plan without specifying the adapted default scratchpad the software shall[11] automatically assign the data for that scratchpad with the default scratchpad that matches the active configuration for the flight plan's owner.	3.1.9	3.1.9.4 The system must [STARS-114] provide the controller with control over flight plan information.
3.2.1.1.10.7.4	12	STARS-SSD-00672	TCP input to modify the ACID or scratch pad data of a track that is not controlled by the TCP shall[12] cause the data block to blink at the owner's display for an adapted interval.	3.1.9 3.1.10	3.1.9.4 The system must [STARS-114] provide the controller with control over flight plan information. 3.1.10.11 The system must [STARS-141] display aircraft information in the form of data blocks.
3.2.1.1.10.7.4	13	STARS-SSD-00673	TCP input to modify the aircraft type or the aircraft category or the RNAV status indicator shall[13] derive an aircraft category or an RNAV status indicator, and then derive a weight class.	3.1.9	3.1.9.4 The system must [STARS-114] provide the controller with control over flight plan information.
3.2.1.1.10.7.4	15	STARS-SSD-00674	TCP input to modify the ownership of a flight that is not controlled by the TCP shall[15] cause the full data block to blink at the position that no longer owns the flight for an adapted interval.	3.1.9 3.1.10	3.1.9.4 The system must [STARS-114] provide the controller with control over flight plan information. 3.1.10.11 The system must [STARS-141] display aircraft information in the form of data blocks.
3.2.1.1.10.7.4	16	STARS-SSD-00675	When the blinking ceases at the TCP that no longer controls the track, it shall[16] display a partial data block at that TCP unless an adaptable parameter is set to retain the full data block.	3.1.10	3.1.10.11 The system must [STARS-141] display aircraft information in the form of data blocks.
3.2.1.1.10.7.4	17	STARS-SSD-00676	Unless it was suspended while in beacon code mismatch, a suspended flight shall[17] be automatically unsuspended when its ownership or ACID is modified by the non-controlling TCP.	3.1.9	3.1.9.3 The system must [STARS-113] provide for controller manipulation of tracked aircraft status.
3.2.1.1.10.7.4	18	STARS-SSD-00677	If the flight is inactive when its ACID or ownership is modified, the blinking shall[18] begin when the flight becomes active.	3.1.9 3.1.10	3.1.9.3 The system must [STARS-113] provide for controller manipulation of tracked aircraft status. 3.1.10.11 The system must [STARS-141] display aircraft information in the form of data blocks.

3.2.1.1.10.7.4	19	STARS-SSD-00678	Entry/exit fix data for flight data modify shall[19] be accepted in abbreviated form where either fix point is entered as a single character adapted to identify a corresponding fix.	3.1.9	3.1.9.4 The system must [STARS-114] provide the controller with control over flight plan information.
3.2.1.1.10.7.5	1	STARS-SSD-00679	TCP input shall[1] enter VFR interfacility flight data for an aircraft identified by ACID, destination identifier data, aircraft type and other optional fields.	3.1.9	3.1.9.4 The system must [STARS-114] provide the controller with control over flight plan information.
3.2.1.1.10.7.5	2	STARS-SSD-00680	The system shall[2] accept any 3 or 4 alphanumeric-characters as a destination identifier value for TCP entered VFR interfacility flight data.	3.1.9	3.1.9.4 The system must [STARS-114] provide the controller with control over flight plan information.
3.2.1.1.10.7.5	3	STARS-SSD-00681	TCP input shall[3] utilize existing ACID, aircraft type and fix/destination identifier data associated with a local VFR track as VFR Interfacility flight data.	3.1.9	3.1.9.4 The system must [STARS-114] provide the controller with control over flight plan information.
3.2.1.1.10.7.5	5	STARS-SSD-00682	An adaptable default entry fix shall[5] be provided for each TCP.	3.1.7	3.1.7.2 The system must [STARS-082] process Arrival, Departure, and Overflight Flight Plans generated internally by an adjacent Terminal facility. 3.1.7.3 The system must [STARS-083] process Arrival, Departure, and Overflight Flight Plans generated internally by an ARTCC.
3.2.1.1.10.7.5	6	STARS-SSD-00683	When TCP input has entered flight data for an inactive flight plan without specifying the adapted default scratchpad the software shall[6] automatically assign the data for that scratchpad from adaptation, based on the active configuration and other adapted criteria.	3.1.9	3.1.9.4 The system must [STARS-114] provide the controller with control over flight plan information.
3.2.1.1.10.7.6	1	STARS-SSD-00684	TCP input shall[1] select a formation flight leader and aircraft for creation of flight plans for the selected aircraft.	3.1.9	3.1.9.4 The system must [STARS-114] provide the controller with control over flight plan information.
3.2.1.1.10.7.6	2	STARS-SSD-00685	TCP input shall[2] modify the number of aircraft for a flight plan.	3.1.9	3.1.9.4 The system must [STARS-114] provide the controller with control over flight plan information.
3.2.1.1.10.7.7	1	STARS-SSD-00686	TCP input shall[1] uniquely identify manually entered departure flight data.	3.1.9	3.1.9.4 The system must [STARS-114] provide the controller with control over flight plan information.
3.2.1.1.10.7.8	1	STARS-SSD-00687	TCP input shall[1] request the transfer of flight plan information from the ARTCC for a specified track.	3.1.7	3.1.7.4 The system must [STARS-084] initiate and accept manual handoffs of flights between itself and an ARTCC.
3.2.1.1.10.7.9	1	STARS-SSD-00688	TCP input shall[1] retransmit a VFR flight plan when the ARTCC rejects a VFR flight plan and indicates an error.	3.1.7	3.1.7.4 The system must [STARS-084] initiate and accept manual handoffs of flights between itself and an ARTCC.
3.2.1.1.10.7.10	1	STARS-SSD-00689	TCP input shall[1] update a flight plan's assigned beacon code with the reported beacon code for an owned associated track in a code mismatch condition.	3.1.9	3.1.9.4 The system must [STARS-114] provide the controller with control over flight plan information.

3.2.1.1.10.7.11	1	STARS-SSD-00690	TCP input shall[1] save pertinent flight and/or track data for offline diagnostic purposes.	3.1.9	3.1.9.4 The system must [STARS-114] provide the controller with control over flight plan information.
3.2.1.1.10.7.12	1	STARS-SSD-00691	TCP input shall[1] suspend/unsuspend an inactive flight plan without affecting its eligibility for automatic association with a track.	3.1.9	3.1.9.3 The system must [STARS-113] provide for controller manipulation of tracked aircraft status.
3.2.1.1.10.8.1.1	1	STARS-SSD-00692	TCP input shall[1] select/inhibit a runway for CRDA processing at the entering TCP.	3.1.5	3.1.5.3 The system must [STARS-063] enable and disable CRDA for each TCP via manual entry.
3.2.1.1.10.8.1.2	1	STARS-SSD-00693	TCP input shall[1] select/inhibit the conditional or unconditional display of a CRDA ghost target for all or a selected aircraft at the entering TCP.	3.1.5	3.1.5.2 The system must [STARS-062] enable and disable Converging Runway Display Aid (CRDA) processing for aircraft on approach to a pair of converging runways based on adaptation. 3.1.5.3 The system must [STARS-063] enable and disable CRDA for each TCP via manual entry.
3.2.1.1.10.8.1.5	1	STARS-SSD-00694	TCP input shall[1] select/inhibit the display of the target and image reference points and lines, as well as the qualification region for the selected runway of an enabled CRDA application.	3.1.5 3.1.10	3.1.5.2 The system must [STARS-062] enable and disable Converging Runway Display Aid (CRDA) processing for aircraft on approach to a pair of converging runways based on adaptation. 3.1.10.32 The system must [STARS-162] enable and disable CRDA information at each TCP via manual entry.
3.2.1.1.10.8.1.5	3	STARS-SSD-00695	TCP input shall[3] select/inhibit the display in the Readout Area of information from the data block of the radar target associated with a selected ghost target or the display an adapted expanded datablock for a selected ghost target.	3.1.5 3.1.10	3.1.5.2 The system must [STARS-062] enable and disable Converging Runway Display Aid (CRDA) processing for aircraft on approach to a pair of converging runways based on adaptation. 3.1.10.11 The system must [STARS-141] display aircraft information in the form of data blocks. 3.1.10.32 The system must [STARS-162] enable and disable CRDA information at each TCP via manual entry.
3.2.1.1.10.8.2.1	1	STARS-SSD-00696	TCP input shall[1] enable or disable FMA processing for the entering TCW.	3.1.4	3.1.4.6 The system must [STARS-056] enable and disable FMA processing via manual entry.
3.2.1.1.10.8.2.2	1	STARS-SSD-00697	TCP input shall[1] select and inhibit an aircraft from all FMA alerts.	3.1.4	3.1.4.6 The system must [STARS-056] enable and disable FMA processing via manual entry.
3.2.1.1.10.8.2.2	2	STARS-SSD-00698	TCP input shall[2] acknowledge the current FMA Warning alert for a selected aircraft.	3.1.10	3.1.10.30 The system must [STARS-160] enable and disable FMA aural alerts at each TCP via manual entry.

3.2.1.1.10.8.2.3	1	STARS-SSD-00699	TCP input shall[1] select an AMZ, with default settings, at each TCW.	3.1.4	3.1.4.1 The system must [STARS-051] detect unsafe proximity between tracked aircraft pairs while on simultaneous approaches when using FMA.
3.2.1.1.10.8.2.4	1	STARS-SSD-00700	TCP input shall[1] select a magnification ratio between 1 and 8 in integer steps.	3.1.9	3.1.9.1 The system must [STARS-111] change the range scale on a display via keyboard entry.
3.2.1.1.10.8.3	1	STARS-SSD-00701	TCP input shall[1] select/inhibit CA/MCI alert for selected aircraft pairs, entering TCP, and any specified track.	3.1.3	3.1.3.3 The system must [STARS-033] enable and disable CA processing for pairs of aircraft via manual entry. 3.1.3.6 The system must [STARS-036] enable and disable MCI alert processing for unassociated aircraft in conflict with an associated aircraft pair via manual entry.
3.2.1.1.10.8.3	2	STARS-SSD-00702	Upon handoff initiate, if the CA/MCI alert is inhibited, the alert shall[2] be enabled automatically for that track.	3.1.3	3.1.3.2 The system must [STARS-032] enable and disable CA processing for pairs of aircraft based upon pre-defined adaptation parameters. 3.1.3.5 The system must [STARS-035] enable and disable MCI alert processing for unassociated aircraft in conflict with an associated aircraft pair based upon pre-defined adaptation parameters.
3.2.1.1.10.8.3	3	STARS-SSD-00703	If adapted, TCP input shall[3] select/inhibit MCI alert for a selected associated track and specified beacon code.	3.1.3	3.1.3.6 The system must [STARS-036] enable and disable MCI alert processing for unassociated aircraft in conflict with an associated aircraft pair via manual entry.
3.2.1.1.10.8.3	4	STARS-SSD-00704	When MCI alerting is inhibited for a selected associated track and specified beacon code, MCI alert suppression shall[4] continue to apply if the selected associated track has coasted and reacquired since entry.	3.1.3	3.1.3.2 The system must [STARS-032] enable and disable CA processing for pairs of aircraft based upon pre-defined adaptation parameters.
3.2.1.1.10.8.4	1	STARS-SSD-00705	TCP input shall[1] select and inhibit MSAW alert for a specified aircraft.	3.1.6 3.1.10	3.1.6.3 The system must [STARS-073] enable and disable Minimum Safe Altitude Warning (MSAW) processing for individual aircraft via manual entry. 3.1.10.33 The system must [STARS-163] generate MSAW visual alerts.
3.2.1.1.10.8.4	2	STARS-SSD-00706	Upon handoff initiate for a given non-VFR track, if the MSAW alert is inhibited, the alert shall[2] be enabled automatically for that track when so adapted.	3.1.10	3.1.10.33 The system must [STARS-163] generate MSAW visual alerts.

3.2.1.1.10.8.5	1	STARS-SSD-00707	TCP input shall[1] select/inhibit the display of the altimeter(s) on a TCP.	3.1.9	3.1.9.5 The system must [STARS-115] provide a controller with the ability to manipulate the presentation of information on an individual situation display.
3.2.1.1.10.8.5	2	STARS-SSD-00708	TCP input shall[2] initiate readout of pre-defined information for the surveillance/altimeter tile that includes the designated location.	3.1.9	3.1.9.5 The system must [STARS-115] provide a controller with the ability to manipulate the presentation of information on an individual situation display.
3.2.1.1.10.8.6	1	STARS-SSD-00709	TCP input shall[1] select/inhibit the display of manually entered ATIS(s) data.	3.1.9	3.1.9.5 The system must [STARS-115] provide a controller with the ability to manipulate the presentation of information on an individual situation display.
3.2.1.1.10.8.7	1	STARS-SSD-00710	TCP input shall[1] enter, modify, or delete a primary or unique auxiliary general information message at all TCP's in the same terminal area.	3.1.9	3.1.9.6 The system must [STARS-116] allow for the control of global system information.
3.2.1.1.10.8.7	2	STARS-SSD-00711	TCP input shall[2] enable/disable display of the primary or unique auxiliary general information message.	3.1.9	3.1.9.6 The system must [STARS-116] allow for the control of global system information.
3.2.1.1.10.8.7	5	STARS-SSD-00712	TCP input shall[5] terminate the blinking of the primary and auxiliary general information strings at the entering TCP.	3.1.9	3.1.9.6 The system must [STARS-116] allow for the control of global system information.
3.2.1.1.10.8.8	1	STARS-SSD-00713	TCP input shall[1] select, inhibit, and relocate altitude restriction information for display on specified TCPs.	3.1.9	3.1.9.5 The system must [STARS-115] provide a controller with the ability to manipulate the presentation of information on an individual situation display.
3.2.1.1.10.8.8	2	STARS-SSD-00714	TCP input shall[2] allow entry of text which will display in the character size selected for list data.	3.1.9	3.1.9.5 The system must [STARS-115] provide a controller with the ability to manipulate the presentation of information on an individual situation display.
3.2.1.1.10.8.9	1	STARS-SSD-00715	TCP input shall[1] select, inhibit, and relocate geographic restriction information for special areas of activity for display on specified TCPs.	3.1.9 3.1.10	3.1.9.5 The system must [STARS-115] provide a controller with the ability to manipulate the presentation of information on an individual situation display. 3.1.10.14 The system must [STARS-144] display geographic digital maps.
3.2.1.1.10.8.9	2	STARS-SSD-00716	TCP input shall[2] define at a specified location a circle or polygon with options to shade and include text.	3.1.9	3.1.9.5 The system must [STARS-115] provide a controller with the ability to manipulate the presentation of information on an individual situation display.

3.2.1.1.10.8.9	3	STARS-SSD-00717	For each TCP-entered altitude or geographic restriction, TCP input shall[3] allow for the display, inhibit and modification of any parts of this data.	3.1.9 3.1.10	3.1.9.5 The system must [STARS-115] provide a controller with the ability to manipulate the presentation of information on an individual situation display. 3.1.10.14 The system must [STARS-144] display geographic digital maps.
3.2.1.1.10.8.9	4	STARS-SSD-00718	The system shall[4] support multiple altitude and geographic restriction areas.	3.1.10	3.1.10.14 The system must [STARS-144] display geographic digital maps.
3.2.1.1.10.8.9	5	STARS-SSD-00719	TCP input shall[5] define a geographic restriction as a user-defined airspace with multiple line segments and the option to include text.	3.1.9	3.1.9.5 The system must [STARS-115] provide a controller with the ability to manipulate the presentation of information on an individual situation display.
3.2.1.1.10.8.9	6	STARS-SSD-00720	TCP input shall[6] support the entry of an altitude or geographic restriction point using latitude and longitude or a corresponding adapted fix.	3.1.9 3.1.10	3.1.9.5 The system must [STARS-115] provide a controller with the ability to manipulate the presentation of information on an individual situation display. 3.1.10.14 The system must [STARS-144] display geographic digital maps.
3.2.1.1.10.8.9	8	STARS-SSD-00721	For each adapted geographic restriction, TCP input shall[8] specify an adapted color for the figure and shading.	3.1.9	3.1.9.6 The system must [STARS-116] allow for the control of global system informa¬tion.
3.2.1.1.10.8.10	1	STARS-SSD-00722	TCP input shall[1] select/inhibit the display of emergency information, per adaptation, for a selected aircraft or the nearest airport to a selected geographic location that is capable of handling aircraft of a designated size category.	3.1.9 3.1.10	3.1.9.5 The system must [STARS-115] provide a controller with the ability to manipulate the presentation of information on an individual situation display. 3.1.10.2 The system must [STARS-132], based upon adaptation, display general information for the facility at each TCP.
3.2.1.1.10.8.10	3	STARS-SSD-00723	The size category designations shall[3] include the following: Helicopters 0 Small aircraft 1 Medium aircraft 2 Large aircraft 3 Jumbo Aircraft 4	3.1.10	3.1.10.2 The system must [STARS-132], based upon adaptation, display general information for the facility at each TCP.

3.2.1.1.10.8.11	1	STARS-SSD-00724	TCP input shall[1] select, inhibit and relocate the tabular list of hospital information, per adaptation.	3.1.9	3.1.9.5 The system must [STARS-115] provide a controller with the ability to manipulate the presentation of information on an individual situation display.
3.2.1.1.10.8.12	1	STARS-SSD-00725	TCP input shall[1] display a blinking square to indicate a hospital's geographic location for an adapted interval, as well as the hospital name if adapted.	3.1.9	3.1.9.5 The system must [STARS-115] provide a controller with the ability to manipulate the presentation of information on an individual situation display.
3.2.1.1.10.8.13.1	1	STARS-SSD-00726	TCP input shall[1] select/inhibit the display of the beacon code of a single track.	3.1.9	3.1.9.5 The system must [STARS-115] provide a controller with the ability to manipulate the presentation of information on an individual situation display.
3.2.1.1.10.8.13.1	2	STARS-SSD-00727	TCP input that selects an unassociated track shall[2] cause a beacon code readout in the limited data block for an adaptable period of time.	3.1.9 3.1.10	3.1.9.5 The system must [STARS-115] provide a controller with the ability to manipulate the presentation of information on an individual situation display. 3.1.10.11 The system must [STARS-141] display aircraft information in the form of data blocks.
3.2.1.1.10.8.13.1	3	STARS-SSD-00728	TCP input that selects an associated track shall[3] display the ACID along with the reported and assigned beacon code, as well as target address and identification if available, in the readout area.	3.1.9	3.1.9.5 The system must [STARS-115] provide a controller with the ability to manipulate the presentation of information on an individual situation display.
3.2.1.1.10.8.13.2	1	STARS-SSD-00729	TCP input shall[1] select/inhibit the display of the beacon code of all unassociated tracks on the entering TCP.	3.1.9	3.1.9.5 The system must [STARS-115] provide a controller with the ability to manipulate the presentation of information on an individual situation display.
3.2.1.1.10.8.13.3	1	STARS-SSD-00730	TCP input shall[1] select/inhibit the display of the beacon code of tracks using beacon codes within adapted beacon code banks	3.1.9	3.1.9.5 The system must [STARS-115] provide a controller with the ability to manipulate the presentation of information on an individual situation display.
3.2.1.1.10.8.13.4	1	STARS-SSD-00731	TCP input shall[1] select the display of a discrete beacon code of tracks with that code for an adaptable period of time.	3.1.9	3.1.9.5 The system must [STARS-115] provide a controller with the ability to manipulate the presentation of information on an individual situation display.
3.2.1.1.10.8.14	1	STARS-SSD-00732	TCP input shall[1] select/inhibit the display of parrots, permanent echoes, beacon & search RTQC targets, surveillance systems search test targets, and reference transmitters on the entering TCP.	3.1.9	3.1.9.5 The system must [STARS-115] provide a controller with the ability to manipulate the presentation of information on an individual situation display.

3.2.1.1.10.8.15	1	STARS-SSD-00733	TCP input for quicklook or quicklook plus shall[1] select or inhibit the simultaneous viewing of full data blocks on the entering TCP for a single track(quicklook), or for the tracks owned by one or more active TCPs(both).	3.1.9 3.1.10	3.1.9.5 The system must [STARS-115] provide a controller with the ability to manipulate the presentation of information on an individual situation display. 3.1.10.11 The system must [STARS-141] display aircraft information in the form of data blocks.
3.2.1.1.10.8.15	2	STARS-SSD-00734	TCP input shall[2] cause the current TCP quicklook and quicklook plus selections to be displayed in the readout area.	3.1.9	3.1.9.5 The system must [STARS-115] provide a controller with the ability to manipulate the presentation of information on an individual situation display.
3.2.1.1.10.8.16.1	1	STARS-SSD-00735	TCP input shall[1] select/inhibit the filtering of the display of the data blocks for associated or unassociated aircraft based on TCP entered altitudes.	3.1.9 3.1.10	3.1.9.5 The system must [STARS-115] provide a controller with the ability to manipulate the presentation of information on an individual situation display. 3.1.10.11 The system must [STARS-141] display aircraft information in the form of data blocks.
3.2.1.1.10.8.16.3	1	STARS-SSD-00736	TCP input shall[1] select/inhibit the display of special data block symbology for unassociated aircraft transmitting codes within a number of selectable beacon code blocks or discrete beacon codes.	3.1.9 3.1.10	3.1.9.5 The system must [STARS-115] provide a controller with the ability to manipulate the presentation of information on an individual situation display. 3.1.10.11 The system must [STARS-141] display aircraft information in the form of data blocks.
3.2.1.1.10.8.16.4	1	STARS-SSD-00737	TCP input shall[1] select/inhibit the display of all filter settings or display the current altitude filter setting in the readout area.	3.1.9	3.1.9.5 The system must [STARS-115] provide a controller with the ability to manipulate the presentation of information on an individual situation display.
3.2.1.1.10.8.16.5	1	STARS-SSD-00738	TCP input shall[1] select/inhibit regional quicklook filters from an adapted set of filters that force display of full data blocks for associated aircraft within the filter bounds or display the current regional quicklook filter in the readout area.	3.1.9 3.1.10	3.1.9.5 The system must [STARS-115] provide a controller with the ability to manipulate the presentation of information on an individual situation display. 3.1.10.11 The system must [STARS-141] display aircraft information in the form of data blocks.

3.2.1.1.10.8.16.6	1	STARS-SSD-00739	TCP input shall[1] enable/disable flight-data auto-modify filters from an adapted set of filters that selectively modify flight data and leader line direction based on a set of parameters and display an informational system message at the MCP.	3.1.9 3.1.10	3.1.9.4 The system must [STARS-114] provide the controller with control over flight plan information. 3.1.10.25 The system must [STARS-155] generate visual alerts based upon the adaptation of each individual facility.
3.2.1.1.10.8.16.6	2	STARS-SSD-00740	TCP input shall[2] cause the currently enabled flight-data auto-modify filters to be displayed in the readout area.	3.1.9	3.1.9.5 The system must [STARS-115] provide a controller with the ability to manipulate the presentation of information on an individual situation display.
3.2.1.1.10.8.16.7	1	STARS-SSD-00741	TCP input shall[1] enable/disable ASV processing system-wide or at the entering position for a selected airport and selected flight status and display an informational system message at the MCP.	3.1.9 3.1.10	3.1.9.3 The system must [STARS-113] provide for controller manipulation of tracked aircraft status. 3.1.10.25 The system must [STARS-155] generate visual alerts based upon the adaptation of each individual facility.
3.2.1.1.10.8.16.7	4	STARS-SSD-00742	TCP input shall[4] enable/disable system-wide ASV processing for a selected associated track or ASV processing at the entering position and display an informational system message at the MCP.	3.1.9 3.1.10	3.1.9.3 The system must [STARS-113] provide for controller manipulation of tracked aircraft status. 3.1.10.25 The system must [STARS-155] generate visual alerts based upon the adaptation of each individual facility.
3.2.1.1.10.8.16.7	5	STARS-SSD-00743	TCP input shall[5] display the current ASV status, system-wide or locally, in the readout area.	3.1.9	3.1.9.5 The system must [STARS-115] provide a controller with the ability to manipulate the presentation of information on an individual situation display.
3.2.1.1.10.8.16.8	1	STARS-SSD-00744	TCP input shall[1] enable/inhibit Altitude Filter Override Volume(s) at the entering display.	3.1.9	3.1.9.5 The system must [STARS-115] provide a controller with the ability to manipulate the presentation of information on an individual situation display.
3.2.1.1.10.8.17	1	STARS-SSD-00745	TCP input shall[1] select/inhibit the display of the reported Mode 2 code of all tracks on entering TCP.	3.1.9	3.1.9.5 The system must [STARS-115] provide a controller with the ability to manipulate the presentation of information on an individual situation display.
3.2.1.1.10.8.18	1	STARS-SSD-00746	TCP input shall[1] place an aircraft in hold until released by another TCP input.	3.1.9	3.1.9.3 The system must [STARS-113] provide for controller manipulation of tracked aircraft status.
3.2.1.1.10.8.18	2	STARS-SSD-00747	When a flight plan that has disassociated from its track is placed in hold, an unsupported data block shall[2] be created at the location at which the disassociation occurred.	3.1.10	3.1.10.11 The system must [STARS-141] display aircraft information in the form of data blocks.

3.2.1.1.10.8.19.1	1	STARS-SSD-00748	TCP input shall[1] create coordination messages for flights by selecting at a minimum the ACID or beacon code.	3.1.9	3.1.9.4 The system must [STARS-114] provide the controller with control over flight plan information.
3.2.1.1.10.8.19.2	1	STARS-SSD-00749	Coordination messages shall[1] have the option to incorporate selections from a TCP data list and a field for TCP entered data.	3.1.9	3.1.9.4 The system must [STARS-114] provide the controller with control over flight plan information.
3.2.1.1.10.8.19.3	1	STARS-SSD-00750	Displayed coordination information shall[1] be edited by TCP input and made available for use in creating revised coordination messages.	3.1.9	3.1.9.4 The system must [STARS-114] provide the controller with control over flight plan information.
3.2.1.1.10.8.19.4	1	STARS-SSD-00751	The TCP input shall[1] send a coordination message to a TCP based on aircraft flight information and an adapted TCP.	3.1.9	3.1.9.4 The system must [STARS-114] provide the controller with control over flight plan information.
3.2.1.1.10.8.19.4	2	STARS-SSD-00752	The receiving TCP shall[2] display only those messages that have been sent, and in the same order as they appear in the list at the sending TCP.	3.1.10	3.1.10.4 The system must [STARS-134] provide a message composition area at the TCPs. 3.1.10.5 The system must [STARS-135] provide a message response area at each TCP.
3.2.1.1.10.8.19.4	3	STARS-SSD-00753	TCP input at the sending TCP shall[3] recall a coordination message based on aircraft flight information.	3.1.9	3.1.9.4 The system must [STARS-114] provide the controller with control over flight plan information.
3.2.1.1.10.8.19.5	1	STARS-SSD-00754	A coordination message from the sending TCP shall[1] provide the options to order coordination information and require the receiving TCP to acknowledge the coordination message.	3.1.10	3.1.10.4 The system must [STARS-134] provide a message composition area at the TCPs. 3.1.10.5 The system must [STARS-135] provide a message response area at each TCP.
3.2.1.1.10.8.19.6	1	STARS-SSD-00755	TCP input at the receiving position shall[1] acknowledge an unacknowledged coordination message or re-acknowledge a manually acknowledged coordination message.	3.1.9	3.1.9.5 The system must [STARS-115] provide a controller with the ability to manipulate the presentation of information on an individual situation display.
3.2.1.1.10.8.19.6	2	STARS-SSD-00756	For each coordination channel between a sending and receiving TCP, adaptation shall[2] specify whether or not messages sent to the receiving TCP are eligible to be automatically acknowledged.	3.1.10	3.1.10.4 The system must [STARS-134] provide a message composition area at the TCPs. 3.1.10.5 The system must [STARS-135] provide a message response area at each TCP.
3.2.1.1.10.8.19.6	3	STARS-SSD-00757	TCP input at a receiving position shall[3] modify the adapted behavior of a specified coordination channel to either enable or disable automatic acknowledgement of messages sent to that TCP.	3.1.10	3.1.10.4 The system must [STARS-134] provide a message composition area at the TCPs. 3.1.10.5 The system must [STARS-135] provide a message response area at each TCP.

3.2.1.1.10.8.19.6	4	STARS-SSD-00758	A manually acknowledged coordination message shall[4] revert to the unacknowledged state based on adaptation and the elapsed time since acknowledgement.	3.1.10	3.1.10.4 The system must [STARS-134] provide a message composition area at the TCPs. 3.1.10.5 The system must [STARS-135] provide a message response area at each TCP.
3.2.1.1.10.8.20	1	STARS-SSD-00759	TCP input shall[1] select/inhibit the display of uncorrelated or mapped uncorrelated search-only targets and the selection of either will toggle the other off.	3.1.9	3.1.9.5 The system must [STARS-115] provide a controller with the ability to manipulate the presentation of information on an individual situation display.
3.2.1.1.10.8.21	1	STARS-SSD-00760	TCP input shall[1] select/inhibit the display of current CA Suppression Zone status for a designated airport.	3.1.9	3.1.9.5 The system must [STARS-115] provide a controller with the ability to manipulate the presentation of information on an individual situation display.
3.2.1.1.10.8.22	1	STARS-SSD-00761	When PRM is adapted, STARS shall[1] generate a message advising PRM positions of the newly-assigned arrival runway for an associated track initially or upon a change.	3.1.10	3.1.10.4 The system must [STARS-134] provide a message composition area at the TCPs. 3.1.10.5 The system must [STARS-135] provide a message response area at each TCP.
3.2.1.1.10.8.23	1	STARS-SSD-00762	TCP input shall[1] select/inhibit the display of Mode C altitude for a selected aircraft.	3.1.9	3.1.9.5 The system must [STARS-115] provide a controller with the ability to manipulate the presentation of information on an individual situation display.
3.2.1.1.10.8.23	2	STARS-SSD-00763	Pilot-reported altitude shall[2] be cleared when display of Mode C altitude is enabled and Mode C altitude is stabilized.	3.1.9	3.1.9.5 The system must [STARS-115] provide a controller with the ability to manipulate the presentation of information on an individual situation display.
3.2.1.1.10.8.24.1	1	STARS-SSD-00764	TCP input shall[1] allow the following modifications to text messages: a. Enable/inhibit the display of the list of all text messages b. enable display of the list of received text messages c. enter a text message d. select blinking for the display of the message e. address the message to a set of TCP's f. move the text message list g. remove a text message from all displays.	3.1.9 3.1.10	3.1.9.5 The system must [STARS-115] provide a controller with the ability to manipulate the presentation of information on an individual situation display. 3.1.10.4 The system must [STARS-134] provide a message composition area at the TCPs. 3.1.10.5 The system must [STARS-135] provide a message response area at each TCP.
3.2.1.1.10.8.24.2	1	STARS-SSD-00765	TCP input shall[1] enter, move, enable, and inhibit display of workstation notes at each TCP.	3.1.9	3.1.9.5 The system must [STARS-115] provide a controller with the ability to manipulate the presentation of information on an individual situation display.

3.2.1.1.10.8.25	1	STARS-SSD-00766	TCP input shall[1] select/inhibit automatic runway assignment to a flight plan for each of up to two regions identified by flow direction.	3.1.9	3.1.9.4 The system must [STARS-114] provide the controller with control over flight plan information.
3.2.1.1.10.8.26	1	STARS-SSD-00767	TCP input shall[1] select/inhibit the display of Significant Point information, per adaptation, for a selected geographic location.	3.1.9 3.1.10	3.1.9.5 The system must [STARS-115] provide a controller with the ability to manipulate the presentation of information on an individual situation display. 3.1.10.14 The system must [STARS-144] display geographic digital maps.
3.2.1.1.10.8.27	1	STARS-SSD-00768	TCP input shall[1] select/inhibit display of the MOA status list at the entering TCP.	3.1.9	3.1.9.5 The system must [STARS-115] provide a controller with the ability to manipulate the presentation of information on an individual situation display.
3.2.1.1.10.8.27	2	STARS-SSD-00769	TCP input shall[2] display the flight with the first, second or third longest standing assignment to an MOA.	3.1.9	3.1.9.5 The system must [STARS-115] provide a controller with the ability to manipulate the presentation of information on an individual situation display.
3.2.1.1.10.8.27	4	STARS-SSD-00770	TCP input shall[4] remove any flight from assignment to a controller-specified MOA segment/level combination.	3.1.9	3.1.9.3 The system must [STARS-113] provide for controller manipulation of tracked aircraft status.
3.2.1.1.10.8.28	1	STARS-SSD-00771	TCP input shall[1] select/inhibit the display of a list of MASZ.	3.1.9	3.1.9.5 The system must [STARS-115] provide a controller with the ability to manipulate the presentation of information on an individual situation display.
3.2.1.1.10.8.29	1	STARS-SSD-00772	TCP input using the middle mouse button to select a data block shall[1] toggle the track in or out of the Highlight State.	3.1.9	3.1.9.5 The system must [STARS-115] provide a controller with the ability to manipulate the presentation of information on an individual situation display.
3.2.1.1.10.8.29	2	STARS-SSD-00773	All data block types shall[2] be capable of being displayed in a Highlight State, regardless of ownership.	3.1.10	3.1.10.11 The system must [STARS-141] display aircraft information in the form of data blocks.
3.2.1.1.10.8.29	3	STARS-SSD-00774	TCP input to place a track in a Highlight or Pointout State shall[3] always allow Pointout to override a Highlight State.	3.1.9	3.1.9.5 The system must [STARS-115] provide a controller with the ability to manipulate the presentation of information on an individual situation display.

3.2.1.1.10.8.30	1	STARS-SSD-00775	TCP input shall[1] remove the Data Block Owned/Previously Owned Color or Blink Color when the entering TCP is the previous owner, leaving the full data block in the unowned color.	3.1.9 3.1.10	3.1.9.5 The system must [STARS-115] provide a controller with the ability to manipulate the presentation of information on an individual situation display. 3.1.10.11 The system must [STARS-141] display aircraft information in the form of data blocks.
3.2.1.1.10.8.31	1	STARS-SSD-00776	TCP input at the position that either owns or does not own the track shall[1] remove the "ADB" indicator from the track's data block at all positions or only the entering position respectively.	3.1.9 3.1.10	3.1.9.5 The system must [STARS-115] provide a controller with the ability to manipulate the presentation of information on an individual situation display. 3.1.10.11 The system must [STARS-141] display aircraft information in the form of data blocks.
3.2.1.1.10.8.32	1	STARS-SSD-00777	When the Pointout Accept History Function is enabled in site adaptation, TCP input shall[1] be capable of the following: a. Clear the pointout accept history and count for a track b. Request display of the pointout accept history for an associated track in the readout area c. Inhibit the display of the pointout accept count in the FDB of all tracks d. Enable the display of the pointout accept count in the FDB of owned tracks e. Enable the display of the pointout accept count in the FDB of all tracks	3.1.9	3.1.9.5 The system must [STARS-115] provide a controller with the ability to manipulate the presentation of information on an individual situation display. 3.1.9.6 The system must [STARS-116] allow for the control of global system information.
3.2.1.1.10.8.32	6	STARS-SSD-00778	Site adaptation shall[6] specify per TCP how the pointout accept count is displayed.	3.1.10	3.1.10.2 The system must [STARS-132], based upon adaptation, display general information for the facility at each TCP.
3.2.1.1.10.8.33	1	STARS-SSD-00779	TCP input shall[1] select/inhibit the display of the Satellite Arrival List.	3.1.9	3.1.9.5 The system must [STARS-115] provide a controller with the ability to manipulate the presentation of information on an individual situation display.
3.2.1.1.10.8.33	2	STARS-SSD-00780	Adaptation shall[2] specify the minimum and maximum range from the airport and the altitude ceiling for tracks which will be displayed in the Satellite Arrival List.	3.1.10	3.1.10.2 The system must [STARS-132], based upon adaptation, display general information for the facility at each TCP.
3.2.1.1.10.9.1	1	STARS-SSD-00781	TCP input shall[1] select/inhibit the display of any non-mandatory information in the system data area individually or simultaneously.	3.1.9	3.1.9.5 The system must [STARS-115] provide a controller with the ability to manipulate the presentation of information on an individual situation display.

3.2.1.1.10.9.2	1	STARS-SSD-00782	TCP input shall[1] include a sign-on and off entry to document each operator at a TCP.	3.1.9	3.1.9.6 The system must [STARS-116] allow for the control of global system information.
3.2.1.1.10.9.2	2	STARS-SSD-00783	User sign-on or off shall[2] leave the TCP settings and preference set selection unchanged with the exception, all weather levels are selected, per adaptation, when either no current user was signed on or your sign on replaces the only other user at that position.	3.1.9	3.1.9.9 The system must [STARS-119] provide for controller retrieval and use of preference sets.
3.2.1.1.10.9.2	3	STARS-SSD-00784	The TCP sign–on entry shall[3] accept a user name of 2 to 8 characters and an optional developmental's user name.	3.1.9	3.1.9.6 The system must [STARS-116] allow for the control of global system information.
3.2.1.1.10.9.2	4	STARS-SSD-00785	The TCP sign–on or off entry shall[4] accept an optional time of day parameter that will override the current time.	3.1.9	3.1.9.9 The system must [STARS-119] provide for controller retrieval and use of preference sets.
3.2.1.1.10.9.2	6	STARS-SSD-00786	When a user signs on, if that user is already signed on at another position, a message shall[6] be displayed in the readout area of the entering TCP indicating the other physical position(s) where the user is currently signed on.	3.1.10	3.1.10.3 The system must [STARS-133] based upon adaptation, display the general status of the system at each TCP.
3.2.1.1.10.9.2	9	STARS-SSD-00787	When an optional developmental user name is supplied as part of the sign-on, the input shall[9] accept a character identifying the developmental relationship from among the following: / = instructor . = evaluator * = certifier + = familiarization session	3.1.9	3.1.9.9 The system must [STARS-119] provide for controller retrieval and use of preference sets.
3.2.1.1.10.9.2	10	STARS-SSD-00788	When the Identification and Authentication security service is not active, the TCP operator sign-on entry shall[10] accept an optional parameter designating a physical keyboard.	3.1.9	3.1.9.9 The system must [STARS-119] provide for controller retrieval and use of preference sets.
3.2.1.1.10.9.2	11	STARS-SSD-00789	The TCP operator sign-on entry shall[11] accept an optional parameter designating a non-interactive position.	3.1.9	3.1.9.9 The system must [STARS-119] provide for controller retrieval and use of preference sets.
3.2.1.1.10.9.2	12	STARS-SSD-00790	The system shall[12] report TCP sign-on and off information in text form in accordance with the NAS-IC-21050001-01 STARS GeNUS ICD.	3.1.11	3.1.11.1 The system must [STARS-171] continuously record all input and output messages from internal sources.
3.2.1.1.10.9.3	1	STARS-SSD-00791	TCP input shall[1] enable/disable training mode for a specified TCP.	3.1.10	3.1.10.21 Each TCW must [STARS-151] have selectable presentation modes.

3.2.1.1.10.9.4	1	STARS-SSD-00792	TCP input shall[1] select brightness intensity individually for the different types of text and graphics presented on a TCP.	3.1.9	3.1.9.5 The system must [STARS-115] provide a controller with the ability to manipulate the presentation of information on an individual situation display.
3.2.1.1.10.9.5.1	1	STARS-SSD-00793	TCP input shall[1] reposition data lists to any location on the TCP display.	3.1.9	3.1.9.5 The system must [STARS-115] provide a controller with the ability to manipulate the presentation of information on an individual situation display.
3.2.1.1.10.9.5.2	1	STARS-SSD-00794	When information is not displayed due to insufficient space in a list, a method of access to this information shall[1] be available at the TCP.	3.1.9	3.1.9.5 The system must [STARS-115] provide a controller with the ability to manipulate the presentation of information on an individual situation display.
3.2.1.1.10.9.5.3	1	STARS-SSD-00795	TCP input shall[1] modify the interval used to determine which flight plans are to be included in the Time Out Warning list.	3.1.9	3.1.9.4 The system must [STARS-114] provide the controller with control over flight plan information.
3.2.1.1.10.9.5.3	2	STARS-SSD-00796	TCP input shall[2] inhibit an individual flight from display in the Time Out Warning list and subsequent change to proposed departure time will remove the inhibition.	3.1.9	3.1.9.5 The system must [STARS-115] provide a controller with the ability to manipulate the presentation of information on an individual situation display.
3.2.1.1.10.9.6	1	STARS-SSD-00797	TCP input shall[1] activate/deactivate the simultaneous combination or individual display of TCP maps as constrained by the geographic map capacities.	3.1.9 3.1.10	3.1.9.5 The system must [STARS-115] provide a controller with the ability to manipulate the presentation of information on an individual situation display. 3.1.10.14 The system must [STARS-144] display geographic digital maps.
3.2.1.1.10.9.7	1	STARS-SSD-00798	TCP input shall[1] enable/disable the pointer device icon to return or not return to the initial pointer position after an entry.	3.1.9	3.1.9.5 The system must [STARS-115] provide a controller with the ability to manipulate the presentation of information on an individual situation display.
3.2.1.1.10.9.8	1	STARS-SSD-00799	TCP input shall[1] select an initial position where the pointer device icon appears.	3.1.9	3.1.9.5 The system must [STARS-115] provide a controller with the ability to manipulate the presentation of information on an individual situation display.
3.2.1.1.10.9.9	1	STARS-SSD-00800	TCP input shall[1] select/inhibit the display and intervals of range rings.	3.1.9	3.1.9.5 The system must [STARS-115] provide a controller with the ability to manipulate the presentation of information on an individual situation display.

3.2.1.1.10.9.11	1	STARS-SSD-00801	TCP input shall[1] select a display range without modifying the cahracter size and line width.	3.1.9	3.1.9.1 The system must [STARS-111] change the range scale on a display via keyboard entry. 3.1.9.2 The system must [STARS-112] change the range scale on a display via a range knob. 3.1.9.5 The system must [STARS-115] provide a controller with the ability to manipulate the presentation of information on an individual situation display.
3.2.1.1.10.9.12	1	STARS-SSD-00802	TCP input shall[1] select the radar display presentation view	3.1.9 3.1.10	3.1.9.5 The system must [STARS-115] provide a controller with the ability to manipulate the presentation of information on an individual situation display. 3.1.10.22 Each TCW must [STARS-152] have a single sensor slant range display presentation mode. 3.1.10.23 Each TCW must [STARS-153] have a single sensor ground plane display presentation mode. 3.1.10.24 Each TCW must [STARS-154] have an integrated multiple sensor display presentation mode (FUSION).
3.2.1.1.10.9.13.1	1	STARS-SSD-00803	Per site adaptation, an aircraft displaying a CA/MCI or LA condition shall[1] be subject to automatic offset of overlapping data blocks independent of whether TCP input has disabled automatic offset of overlapping data blocks.	3.1.10	3.1.10.11 The system must [STARS-141] display aircraft information in the form of data blocks.
3.2.1.1.10.9.13.2	1	STARS-SSD-00804	TCP input shall[1] enable/disable the automatic offset of overlapping data blocks entering TCP.	3.1.9 3.1.10	3.1.9.5 The system must [STARS-115] provide a controller with the ability to manipulate the presentation of information on an individual situation display. 3.1.10.11 The system must [STARS-141] display aircraft information in the form of data blocks.
3.2.1.1.10.9.13.2	2	STARS-SSD-00805	Adaptation shall[2] specify if automatic offset will use only leader line orientation changes, or a combination of leader line length and orientation changes.	3.1.10	3.1.10.11 The system must [STARS-141] display aircraft information in the form of data blocks.

3.2.1.1.10.9.13.3	1	STARS-SSD-00806	A DCP knob, if available, shall[1] modify the default offset for tracks owned by the main keyboard of the TCP.	3.1.9 3.1.10	3.1.9.5 The system must [STARS-115] provide a controller with the ability to manipulate the presentation of information on an individual situation display. 3.1.10.11 The system must [STARS-141] display aircraft information in the form of data blocks.
3.2.1.1.10.9.13.3	2	STARS-SSD-00807	TCP input shall[2] establish a default leader and data block offset for tracks at this TCP.	3.1.9 3.1.10	3.1.9.5 The system must [STARS-115] provide a controller with the ability to manipulate the presentation of information on an individual situation display. 3.1.10.11 The system must [STARS-141] display aircraft information in the form of data blocks.
3.2.1.1.10.9.13.4	1	STARS-SSD-00808	TCP input shall[1] apply or revoke offset of the data block of a single track only at this TCP or all TCP's with a full data block for that track.	3.1.9 3.1.10	3.1.9.5 The system must [STARS-115] provide a controller with the ability to manipulate the presentation of information on an individual situation display. 3.1.10.11 The system must [STARS-141] display aircraft information in the form of data blocks.
3.2.1.1.10.9.13.5	1	STARS-SSD-00809	Leader direction priority shall[1] be applied in the following order: a. Automatically positioned during alert conditions b. Local manually assigned single track leader direction c. Adapted leader direction from filter adaptation d. Global manually assigned single track leader direction e. Leader direction derived from the Data Block Offset Direction Rules adaptation f. Leader direction from the display of the track owner for FDBs not owned by this TCP g. Leader direction for unassociated tracks h. Leader direction for tracks owned by this TCP i. Manually assigned leader direction for tracks owned by specified TCPs j. Leader Direction for tracks unowned by this TCP	3.1.10	3.1.10.11 The system must [STARS-141] display aircraft information in the form of data blocks.

3.2.1.1.10.9.13.6	1	STARS-SSD-00810	The applied leader and data block offset shall[1] be from one of the following directions, North; Northwest; West; Southwest; South; Southeast; East or Northeast.	3.1.10	3.1.10.11 The system must [STARS-141] display aircraft information in the form of data blocks.
3.2.1.1.10.9.13.7	1	STARS-SSD-00811	TCP input shall[1] enable/disable an adapted condition controlling data block leader direction.	3.1.9	3.1.9.5 The system must [STARS-115] provide a controller with the ability to manipulate the presentation of information on an individual situation display.on.
3.2.1.1.10.9.14.1	1	STARS-SSD-00812	TCP input shall[1] establish, modify and store multiple preference sets, that control selectable display features, for each ATC operator.	3.1.9	3.1.9.9 The system must [STARS-119] provide for controller retrieval and use of preference sets.
3.2.1.1.10.9.14.1	2	STARS-SSD-00813	TCP input to establish, delete and store preference sets shall[2] require the entry of a controller Personal Identification Number (PIN).	3.1.9	3.1.9.9 The system must [STARS-119] provide for controller retrieval and use of preference sets.
3.2.1.1.10.9.14.1	3	STARS-SSD-00814	A preference set entry requiring a PIN shall[3] display an "*" in the preview area for each entered PIN character.	3.1.9	3.1.9.9 The system must [STARS-119] provide for controller retrieval and use of preference sets.
3.2.1.1.10.9.14.2	1	STARS-SSD-00815	An ATC operator preference set shall[1] be saved and or activated via a specific TCP entry.	3.1.9	3.1.9.9 The system must [STARS-119] provide for controller retrieval and use of preference sets.
3.2.1.1.10.9.14.3	1	STARS-SSD-00816	Based on adaptation and display setup the applied preference set shall[1] capture predefined display setting adjustments for future retrieval.	3.1.9	3.1.9.9 The system must [STARS-119] provide for controller retrieval and use of preference sets.
3.2.1.1.10.9.14.6	1	STARS-SSD-00817	Each TCP shall[1] have, at startup, a default preference set in normal operation mode and for each AMZ in FMA mode.	3.1.9	3.1.9.9 The system must [STARS-119] provide for controller retrieval and use of preference sets.
3.2.1.1.10.9.15	1	STARS-SSD-00818	In single sensor slant position or fused-track display view, TCP input shall[1] respectively based on adaptation or always, select/deselect PAM display view.	3.1.9	3.1.9.5 The system must [STARS-115] provide a controller with the ability to manipulate the pre-sentation of information on an individual situation display.
3.2.1.1.10.9.16	1	STARS-SSD-00819	Site adaptation shall[1] specify if either the Cursor Dwell functionality or the Multi Track functionality is enabled system-wide at initialization.	3.1.10	3.1.10.7 The system must [STARS-137] display a target indicator at the posi¬tion of each surveillance target received in single sensor mode. 3.1.10.8 The system must [STARS-138] display a target indicator at the composite position of each surveillance target received in multi-sensor and Fusion modes.
3.2.1.1.10.9.16	2	STARS-SSD-00820	TCP input shall[2] enable/disable the Cursor Dwell functionality per TCP while simultaneously disabling/enabling Multi Track functionality.	3.1.9	3.1.9.5 The system must [STARS-115] provide a controller with the ability to manipulate the presentation of information on an individual situation display.

3.2.1.1.10.10.1	1	STARS-SSD-00821	Per adaptation, altimeter settings in millibars or hundredths of inches of mercury shall[1] be accepted.	3.1.2	3.1.2.6 The system must [STARS-016] provide for automatic entry of Altimeter data for the calculation of aircraft altitude information. 3.1.2.7 The system must [STARS-017] provide for manual override entry of Altimeter data for the calculation of aircraft altitude information.
3.2.1.1.10.10.1	2	STARS-SSD-00822	TCP input shall[2] set the altimeter method of entry to automatic or manual for any reporting station adapted to the TCP and if the latter allow modification	3.1.9	3.1.9.6 The system must [STARS-116] allow for the control of global system information.
3.2.1.1.10.10.2	1	STARS-SSD-00823	TCP input shall[1] modity the ATIS specified airports and adapted terminal areas.	3.1.9	3.1.9.6 The system must [STARS-116] allow for the control of global system information.
3.2.1.1.10.10.3	1	STARS-SSD-00824	MCP input shall[1] enable/disable the printout of all interfacility messages or selected message types as specified by the TCP.	3.1.9 3.1.12.4	3.1.9.6 The system must [STARS-116] allow for the control of global system information. 3.1.12.4 The system must [STARS-184] provide ATC operational information, including graphical plots, in electronic printable form.
3.2.1.1.10.10.4	1	STARS-SSD-00825	TCP input shall[1] enable/disable automatic handoff processing for the entire TAS.	3.1.9	3.1.9.6 The system must [STARS-116] allow for the control of global system information.
3.2.1.1.10.10.5	1	STARS-SSD-00826	If an IFDT interface is adapted, TCP input shall[1] allow for the ARTCC to be configured in FDP or RDP mode, enable a specific ARTCC with or without the deletion of inactive flight plans and disable an ARTCC.	3.1.9	3.1.9.4 The system must [STARS-114] provide the controller with control over flight plan information.
3.2.1.1.10.10.6.1	1	STARS-SSD-00827	TCP input shall[1] enable/disable CA, MCI or MSAW processing for the entire TAS.	3.1.3 3.1.6	3.1.3.4 The system must [STARS-034] enable and disable CA processing for the entire facility from a single keyboard entry. 3.1.3.7 The system must [STARS-037] enable and disable MCI alert processing for the entire facility from a single keyboard entry. 3.1.6.4 The system must [STARS-074] enable and disable MSAW processing for the entire TAS via manual entry.
3.2.1.1.10.10.6.2	1	STARS-SSD-00828	TCP input shall[1] enable/disable adapted areas defined by altitude and geographic parameters from CA/MCI processing	3.1.9	3.1.9.6 The system must [STARS-116] allow for the control of global system information.

3.2.1.1.10.10.6.3	1	STARS-SSD-00829	TCP input shall[1] enable/disable CRDA processing for the entire TAS, a single terminal area, as well as, select tie or stagger modes of operation.	3.1.5	3.1.5.3 The system must [STARS-063] enable and disable CRDA for each TCP via manual entry.
3.2.1.1.10.10.6.5	1	STARS-SSD-00830	TCP input shall[1] enable/disable MSAW approach monitoring processing for the entire TAS.	3.1.6	3.1.6.4 The system must [STARS-074] enable and disable MSAW processing for the entire TAS via manual entry.
3.2.1.1.10.10.6.6	1	STARS-SSD-00831	TCP input shall[1] enable/disable individual adapted MASZ for the entire TAS.	3.1.9	3.1.9.6 The system must [STARS-116] allow for the control of global system information.
3.2.1.1.10.10.6.7	1	STARS-SSD-00832	MCP input shall[1] be able to select the independent time source or manually enter the system time or date and override the information from the external source.	3.1.9	3.1.9.6 The system must [STARS-116] allow for the control of global system information.
3.2.1.1.10.10.10	1	STARS-SSD-00833	If an IFDT interface is adapted, TCP input shall[1] enable/disable transmission of TFMS information, TZ messages, over the interface when the Traffic Management Unit (TMU) is not adapted.	3.1.9	3.1.9.6 The system must [STARS-116] allow for the control of global system information.
3.2.1.1.10.10.11	1	STARS-SSD-00834	TCP input shall[1] enable/disable the declaration of Instrument Operations conditions for designated airports from among the set of airports for which traffic statistics are collected.	3.1.9	3.1.9.6 The system must [STARS-116] allow for the control of global system information.
3.2.1.1.10.10.12	1	STARS-SSD-00835	TCP input shall[1] enable/disable an RNAV Status Delete Region for the entire TAS.	3.1.9	3.1.9.6 The system must [STARS-116] allow for the control of global system information.
3.2.1.1.10.10.13	1	STARS-SSD-00836	TCP input shall[1] enable/disable the state of an operator declared sensor failure.	3.1.9	3.1.9.6 The system must [STARS-116] allow for the control of global system information.
3.2.1.1.10.10.13	2	STARS-SSD-00837	If a radar is in a failure state, TCP input shall[2] enable/disable RTQC status monitor processing for that radar.	3.1.9	3.1.9.6 The system must [STARS-116] allow for the control of global system information.
3.2.1.1.10.10.13	3	STARS-SSD-00838	When a radar transitions from a declared failure state to the normal state, RTQC status monitor processing shall[3] be automatically enabled.	3.1.1	3.1.1.1 The system must [STARS-001] accept aircraft position and weather data simultaneously from multiple surveillance systems within geographic areas defined by site adaptable (SA) parameters. 3.1.1.2 The system must [STARS-002] process digital primary inputs from the FAA and DoD air traffic surveillance systems, if available. 3.1.1.3 The system must [STARS-003] process secondary inputs from the FAA and DoD air traffic surveillance systems.

3.2.1.1.10.10.14	1	STARS-SSD-00839	TCP input shall[1] display the value of or modify flight plan flush time.	3.1.9	3.1.9.4 The system must [STARS-114] provide the controller with control over flight plan information. 3.1.9.5 The system must [STARS-115] provide a controller with the ability to manipulate the presentation of information on an individual situation display.
3.2.1.1.10.11.1	1	STARS-SSD-00840	The TCP shall[1] accept and process all Controller Position Configuration entries.	3.1.9	3.1.9.6 The system must [STARS-116] allow for the control of global system information.
3.2.1.1.10.11.2	1	STARS-SSD-00841	Each TCW and TDW shall[1] support three unique TCP's each having their own pointer and data input areas on the display. STARS G1/G2 hardware is only required to support two TCP's per TDW.	3.1.9	3.1.9.6 The system must [STARS-116] allow for the control of global system information.
3.2.1.1.10.11.3	1	STARS-SSD-00842	TCP input shall[1] provide for the following consolidation entries, with Table 3.2.1.1.10-1 providing examples: a. Basic b. Full c. Limited d. Designate a Basic or Full consolidated TCP a Limited e. Consolidate all, excludes all tower TCP's f. Deconsolidate	3.1.9	3.1.9.4 The system must [STARS-114] provide the controller with control over flight plan information.
3.2.1.1.10.11.3	2	STARS-SSD-00843	When consolidating, and the sending position is currently a secondary, if the receiving TCP has airspace or not, the sending position shall[2] become consolidated at the receiving TCP as the secondary or primary position respectively, as long as neither the receiving nor the sending positions are in a limited or basic consolidation.	3.1.9	3.1.9.4 The system must [STARS-114] provide the controller with control over flight plan information.
3.2.1.1.10.11.3	3	STARS-SSD-00844	TCP input shall[3] activate a printout of all TCP configurations, initiate a readout of the current TCP consolidations or all keyboard pairings for the Terminal Sector adapted to the entering TCP.	3.1.12	3.1.12.4 The system must [STARS-184] provide ATC operational information, including graphical plots, in electronic printable form.
3.2.1.1.10.11.4	1	STARS-SSD-00845	TCP input shall[1] permit the input device to be coupled with or decoupled from other TCP(s).	3.1.9	3.1.9.6 The system must [STARS-116] allow for the control of global system information.

3.2.1.1.10.11.5.1	1	STARS-SSD-00846	TCP input shall[1] select a configuration plan and optional Terminal Sector identifier to activate resectorization with the option of including or excluding tower TCPs.	3.1.9 3.2.4	3.1.9.6 The system must [STARS-116] allow for the control of global system information. 3.2.4.1 The system must [STARS-241] be scalable so as to provide the same capacity, functionality, and capability for a range of terminal ATC facilities.
3.2.1.1.10.11.5.2	1	STARS-SSD-00847	TCP input shall[1] activate partial resectorization for specified fixes and specified TCPs.	3.1.9	3.1.9.4 The system must [STARS-114] provide the controller with control over flight plan information.
3.2.1.1.10.11.5.2	2	STARS-SSD-00848	TCP input shall[2] assign to the specified TCP an adapted group to fix pairs per terminal area designated by a single letter.	3.1.9	3.1.9.4 The system must [STARS-114] provide the controller with control over flight plan information.
3.2.1.1.10.11.5.3	1	STARS-SSD-00849	TCP input shall[1] activate a printout of the TCP configuration detailing all TCP associations to entry and exit fixes from a TCP.	3.1.12	3.1.12.4 The system must [STARS-184] provide ATC operational information, including graphical plots, in electronic printable form.
3.2.1.1.10.11.6	1	STARS-SSD-00850	TCP input shall[1] place any TCP into training mode.	3.1.10	3.1.10.21 Each TCW must [STARS-151] have selectable presentation modes.
3.2.1.1.10.11.6	2	STARS-SSD-00851	TCP input shall[2] provide control of simulated targets for test and training purposes.	3.1.9	3.1.9.3 The system must [STARS-113] provide for controller manipulation of tracked aircraft status. 3.1.9.4 The system must [STARS-114] provide the controller with control over flight plan information.
3.2.1.1.10.12	1	STARS-SSD-00852	TCP input shall[1] cause the geographic position of the current cursor location to be displayed in the readout area as latitude/longitude coordinates.	3.1.9	3.1.9.5 The system must [STARS-115] provide a controller with the ability to manipulate the presentation of information on an individual situation display.
3.2.1.1.11.1	1	STARS-SSD-00853	The service levels available to be displayed at any TCP shall[1] be indicated on the corresponding TCW/TDW.	3.1.10	3.1.10.3 The system must [STARS-133] based upon adaptation, display the general status of the system at each TCP.
3.2.1.1.11.2	1	STARS-SSD-00854	All display presentation functions shall[1] be available at all TCPs.	3.1.9 3.1.10	3.1.9.5 The system must [STARS-115] provide a controller with the ability to manipulate the presentation of information on an individual situation display. 3.1.10.21 Each TCW must [STARS-151] have selectable presentation modes.
3.2.1.1.11.3	1	STARS-SSD-00855	The data block shall[1] indicate when an aircraft enters an adapted three dimensional partial filter region and data field values match values specified in adaptation.	3.1.10	3.1.10.11 The system must [STARS-141] display aircraft information in the form of data blocks.

3.2.1.1.11.3.1	2	STARS-SSD-00856	The system shall[2] use the manually-entered pilot-reported altitude or an adapted parameter to determine whether the aircraft satisfies the altitude criteria for inclusion in the airspace region.	3.1.2	3.1.2.4 The system must [STARS-014] perform altitude tracking, using target reports from both single and multisensory surveillance systems.
3.2.1.1.11.3.1	3	STARS-SSD-00857	Adaptation shall [3] specify whether a TCP sounds a Wrong Airport aural alarm when a track enters a partial filter.	3.1.10	3.1.10.26 The system must [STARS-156] generate aural alarms based upon the adaptation of each individual TCP.
3.2.1.1.11.3.1	6	STARS-SSD-00858	The data block shall[6] display as a full data block when an aircraft is within the filter bounds of an active regional quicklook filter and the adapted conditions are satisfied.	3.1.10	3.1.10.11 The system must [STARS-141] display aircraft information in the form of data blocks.
3.2.1.1.11.3.1	7	STARS-SSD-00859	If the track does not have a valid altitude then its eligibility for a regional quicklook filter shall[7] be based on its assigned altitude if available.	3.1.2	3.1.2.4 The system must [STARS-014] perform altitude tracking, using target reports from both single and multisensory surveillance systems.
3.2.1.1.11.3.1	8	STARS-SSD-00860	An aircraft that is within the filter bounds of an enabled flight-data auto-modify filter shall[8] qualify for the filter if all of the adapted conditions are satisfied.	3.1.7	3.1.7.2 The system must [STARS-082] process Arrival, Departure, and Overflight Flight Plans generated internally by an adjacent Terminal facility. 3.1.7.3 The system must [STARS-083] process Arrival, Departure, and Overflight Flight Plans generated internally by an ARTCC.
3.2.1.1.11.3.1	9	STARS-SSD-00861	Adaptation data shall[9] specify what actions are to be carried out for an active flight plan and recorded as automatic functions in CDR when it first qualifies or when it exits the filter bounds for an enabled flight-data auto-modify filter.	3.1.7	3.1.7.2 The system must [STARS-082] process Arrival, Departure, and Overflight Flight Plans generated internally by an adjacent Terminal facility. 3.1.7.3 The system must [STARS-083] process Arrival, Departure, and Overflight Flight Plans generated internally by an ARTCC.
3.2.1.1.11.3.1	13	STARS-SSD-00862	Per adaptation, each flight-data auto-modify filter shall[13] be automatically enabled or disabled on startup.	3.1.7	3.1.7.2 The system must [STARS-082] process Arrival, Departure, and Overflight Flight Plans generated internally by an adjacent Terminal facility. 3.1.7.3 The system must [STARS-083] process Arrival, Departure, and Overflight Flight Plans generated internally by an ARTCC.
3.2.1.1.11.3.2	1	STARS-SSD-00863	The data block shall[1] uniquely indicate when aircraft are within active filter bounds.	3.1.10	3.1.10.11 The system must [STARS-141] display aircraft information in the form of data blocks.
3.2.1.1.11.3.2	2	STARS-SSD-00864	A data block shall[2] display altitude for mode-C tracks regardless of filter settings when the track is within adapted Altitude Filter Override Volume(s).	3.1.10	3.1.10.11 The system must [STARS-141] display aircraft information in the form of data blocks.

3.2.1.1.11.3.2	3	STARS-SSD-00865	Multiple Altitude Filter Override Volumes shall[3] be adaptable and automatically selected per configuration plan for the Terminal Sector .	3.1.2	3.1.2.6 The system must [STARS-016] provide for automatic entry of Altimeter data for the calculation of aircraft altitude information.
3.2.1.1.11.3.3	1	STARS-SSD-00866	The data block shall[1] uniquely indicate when there is a mismatch between the assigned and reported beacon code and indicate the assigned beacon code.	3.1.2 3.1.7 3.1.10	3.1.2.2 The system must [STARS-012] automatically track all secondary surveillance targets within a geographic area defined by SA parameters. 3.1.7.2 The system must [STARS-082] process Arrival, Departure, and Overflight Flight Plans generated internally by an adjacent Terminal facility. 3.1.7.3 The system must [STARS-083] process Arrival, Departure, and Overflight Flight Plans generated internally by an ARTCC. 3.1.10.11 The system must [STARS-141] display aircraft information in the form of data blocks.
3.2.1.1.11.3.4	1	STARS-SSD-00867	The data block shall[1] uniquely indicate when a track is not receiving surveillance updates and remain at the last displayed position when in an adaptable radar/beacon blind area or geographic freeze region and when the track's owning TCP is not adapted to be exempt from area freeze.	3.1.2 3.1.10	3.1.2.1 The system must [STARS-011] automatically track all primary surveillance targets within a geographic area defined by SA parameters. 3.1.2.2 The system must [STARS-012] automatically track all secondary surveillance targets within a geographic area defined by SA parameters. 3.1.10.11 The system must [STARS-141] display aircraft information in the form of data blocks.
3.2.1.1.11.3.4	2	STARS-SSD-00868	The system shall[2] provide multiple adapted freeze regions per terminal area	3.1.2	3.1.2.1 The system must [STARS-011] automatically track all primary surveillance targets within a geographic area defined by SA parameters. 3.1.2.2 The system must [STARS-012] automatically track all secondary surveillance targets within a geographic area defined by SA parameters.

3.2.1.1.11.3.4	3	STARS-SSD-00869	When no valid track altitude exists, an adaptable parameter or pilot reported altitude shall[3] be used to determine whether the aircraft satisfies the altitude criteria for inclusion in the geographic freeze region.	3.1.2	3.1.2.1 The system must [STARS-011] automatically track all primary surveillance targets within a geographic area defined by SA parameters. 3.1.2.2 The system must [STARS-012] automatically track all secondary surveillance targets within a geographic area defined by SA parameters. 3.1.2.7 The system must [STARS-017] provide for manual override entry of Altimeter data for the calculation of aircraft altitude information.
3.2.1.1.11.3.5	1	STARS-SSD-00870	The data block shall[1] indicate when a departure message failure occurs, an acknowledgment is not received or manual association indicates the need for manual coordination.	3.1.7 3.1.10	3.1.7.2 The system must [STARS-082] process Arrival, Departure, and Overflight Flight Plans generated internally by an adjacent Terminal facility. 3.1.7.3 The system must [STARS-083] process Arrival, Departure, and Overflight Flight Plans generated internally by an ARTCC. 3.1.10.11 The system must [STARS-141] display aircraft information in the form of data blocks.
3.2.1.1.11.3.6	1	STARS-SSD-00871	The data block shall[1] uniquely indicate when an aircraft transponder is indicating either an emergency(EM 7700), radio failure(RF 7600), hijack(HJ 7500), or lost link (LL 7400) condition (Alert SPC).	3.1.2 3.1.10	3.1.2.2 The system must [STARS-012] automatically track all secondary surveillance targets within a geographic area defined by SA parameters. 3.1.10.11 The system must [STARS-141] display aircraft information in the form of data blocks.
3.2.1.1.11.3.6	2	STARS-SSD-00872	When a transponder from a suspended aircraft is indicating an Alert SPC, the track shall[2] be unsuspended automatically.	3.1.2 3.1.10	3.1.7.2 The system must [STARS-082] process Arrival, Departure, and Overflight Flight Plans generated internally by an adjacent Terminal facility. 3.1.7.3 The system must [STARS-083] process Arrival, Departure, and Overflight Flight Plans generated internally by an ARTCC. 3.1.10.11 The system must [STARS-141] display aircraft information in the form of data blocks.

3.2.1.1.11.3.6	3	STARS-SSD-00873	Until acknowledged by controller input, the Alert SPC track shall[3] be displayed blinking in line 0 of the data block in the Alert color, once acknowledged or if the condition is entered by controller it will not blink.	3.1.9 3.1.10	3.1.9.3 The system must [STARS-113] provide for controller manipulation of tracked aircraft status. 3.1.10.11 The system must [STARS-141] display aircraft information in the form of data blocks. 3.1.10.25 The system must [STARS-155] generate visual alerts based upon the adaptation of each individual facility.
3.2.1.1.11.3.6	6	STARS-SSD-00874	Until acknowledged by controller input, adapted special condition code indicators shall[6] be displayed blinking in line 0 of the data block in the unacknowledged Caution color, once acknowledged it will stop blinking but remain as long as it is squawking the corresponding beacon code.	3.1.9 3.1.10	3.1.9.3 The system must [STARS-113] provide for controller manipulation of tracked aircraft status. 3.1.10.11 The system must [STARS-141] display aircraft information in the form of data blocks. 3.1.10.25 The system must [STARS-155] generate visual alerts based upon the adaptation of each individual facility.
3.2.1.1.11.3.6	8	STARS-SSD-00875	If different sensors report different special condition codes for the same aircraft, then the order of precedence for display shall[8] be as follows: a. the code reported by one or more radars, or by the multilateration sensor b. the code reported by ADS-B 1090ES c. the code reported by ADS-B UAT.	3.1.2 3.1.10	3.1.2.2 The system must [STARS-012] automatically track all secondary surveillance targets within a geographic area defined by SA parameters. 3.1.10.11 The system must [STARS-141] display aircraft information in the form of data blocks. 3.1.10.25 The system must [STARS-155] generate visual alerts based upon the adaptation of each individual facility.
3.2.1.1.11.3.6	9	STARS-SSD-00876	When a track laterally coasts out while displaying any Alert SPC code, and is not in a filter adapted to inhibit freezing of tracks in special code alert, the track shall[9] freeze at the last displayed position with the code displayed until either the track is manually terminated or target reports are received that cause the track to unfreeze, and the aircraft transponder is no longer squawking a special code, and the flight does not have a controller-entered special code.	3.1.2 3.1.9 3.1.10	3.1.2.2 The system must [STARS-012] automatically track all secondary surveillance targets within a geographic area defined by SA parameters. 3.1.9.3 The system must [STARS-113] provide for controller manipulation of tracked aircraft status. 3.1.10.25 The system must [STARS-155] generate visual alerts based upon the adaptation of each individual facility.

3.2.1.1.11.3.6	10	STARS-SSD-00877	Adapted special condition code indicators shall[10] be displayed non-blinking in the data block in the Caution color when an indicator is entered by controller input and the following is true: a. The track is not already transponding a special beacon code b. The track is associated and either the track is displaying an FDB prior to the alert or the code is adapted to display alerts on a PDB.	3.1.2 3.1.9 3.1.10	3.1.2.2 The system must [STARS-012] automatically track all secondary surveillance targets within a geographic area defined by SA parameters. 3.1.9.3 The system must [STARS-113] provide for controller manipulation of tracked aircraft status. 3.1.10.11 The system must [STARS-141] display aircraft information in the form of data blocks. 3.1.10.25 The system must [STARS-155] generate visual alerts based upon the adaptation of each individual facility.
3.2.1.1.11.3.7	2	STARS-SSD-00878	The TCW/TDW aural alarm shall[2] sound when any of the following occurs: a. A full data block for an Alert SPC track owned by or adapted to ring for this TCP b. An unassociated track with a blinking alarm beacon code has not been globally or locally acknowledged at this TCP c. A full data block for an Alert SPC track is the previous owner and this TCP is adapted to ring for previous owner.	3.1.2 3.1.10	3.1.2.2 The system must [STARS-012] automatically track all secondary surveillance targets within a geographic area defined by SA parameters. 3.1.10.11 The system must [STARS-141] display aircraft information in the form of data blocks. 3.1.10.25 The system must [STARS-155] generate visual alerts based upon the adaptation of each individual facility. 3.1.10.26 The system must [STARS-156] generate aural alarms based upon the adaptation of each individual TCP.
3.2.1.1.11.3.8	1	STARS-SSD-00879	Geographic or data field values that correspond to adapted values shall[1] force the display of either other data fields in data blocks or an adapted data block type to adapted TCP(s).	3.1.10	3.1.10.11 The system must [STARS-141] display aircraft information in the form of data blocks. 3.1.10.12 The system must [STARS-142] allow each site to define the content of data blocks in site adaptation.

3.2.1.1.11.3.10	1	STARS-SSD-00880	A departure aircraft data block shall[1] indicate when it fails to automatically acquire in an adaptable departure area.	3.1.7 3.1.10	3.1.7.2 The system must [STARS-082] process Arrival, Departure, and Overflight Flight Plans generated internally by an adjacent Terminal facility. 3.1.7.3 The system must [STARS-083] process Arrival, Departure, and Overflight Flight Plans generated internally by an ARTCC. 3.1.10.11 The system must [STARS-141] display aircraft information in the form of data blocks.
3.2.1.1.11.3.10	2	STARS-SSD-00881	For each departure area and no-flight-plan alert region, adaptation data shall[2] define the set of TCPs that the automatic acquisition failure indications are displayed, and optionally, an airport associated with the area.	3.1.7	3.1.7.2 The system must [STARS-082] process Arrival, Departure, and Overflight Flight Plans generated internally by an adjacent Terminal facility. 3.1.7.3 The system must [STARS-083] process Arrival, Departure, and Overflight Flight Plans generated internally by an ARTCC.
3.2.1.1.11.3.10	4	STARS-SSD-00882	For an airport that is associated with an adaptable departure area or no-flight-plan alert region, adaptation data shall[4] define a list of discrete Mode 3/A codes for which the automatic acquisition failure indication will not be displayed, and a list of non-discrete Mode 3/A codes for which the indication will be displayed.	3.1.7 3.1.10	3.1.7.2 The system must [STARS-082] process Arrival, Departure, and Overflight Flight Plans generated internally by an adjacent Terminal facility. 3.1.7.3 The system must [STARS-083] process Arrival, Departure, and Overflight Flight Plans generated internally by an ARTCC. 3.1.10.9 The system must [STARS-139] display aircraft status at each TCP.
3.2.1.1.11.3.10	6	STARS-SSD-00883	TCP input shall[6] enable/inhibit the display of automatic acquisition failure indications system-wide for all tracks departing from the specified departure area, entering the specified no-flight-plan alert region, or inhibit display for a single track at the entering TCP.	3.1.9 3.1.10	3.1.9.5 The system must [STARS-115] provide a controller with the ability to manipulate the pre-sentation of information on an individual situation display. 3.1.10.9 The system must [STARS-139] display aircraft status at each TCP.

3.2.1.1.11.3.10	8	STARS-SSD-00884	The data block shall[8] indicate when an aircraft that is eligible to display the automatic acquisition failure indication enters an adapted three dimensional no-flight-plan alert region, and either has no flight plan or is adapted to not check for a flight plan.	3.1.7 3.1.10	3.1.7.2 The system must [STARS-082] process Arrival, Departure, and Overflight Flight Plans generated internally by an adjacent Terminal facility. 3.1.7.3 The system must [STARS-083] process Arrival, Departure, and Overflight Flight Plans generated internally by an ARTCC. 3.1.10.9 The system must [STARS-139] display aircraft status at each TCP. 3.1.10.11 The system must [STARS-141] display aircraft information in the form of data blocks.
3.2.1.1.11.3.11	1	STARS-SSD-00885	Automatic handoff shall[1] be inhibited when track position and adaptation parameters are satisfied.	3.1.7	3.1.7.5 The system must [STARS-085] initiate and accept automatic handoffs of flights, based upon adaptation criteria, between itself and an ARTCC. 3.1.7.7 The system must [STARS-087] initiate and accept automatic handoffs of flights, based upon adaptation criteria, between itself and an adjacent Terminal facility. 3.1.7.9 The system must [STARS-089] initiate and accept automatic handoffs of flights, based upon adaptation criteria, between two TCPs within the facility.

3.2.1.1.11.3.11	2	STARS-SSD-00886	The data block shall[2] have an indication when any of the following occur: a. An Interfacility handoff is received but target does not satisfy an adapted distance b. Aircraft in handoff until an adapted time after the handoff is accepted c. An Interfacility handoff has been cancelled by the receiving facility (ARTCC only) d. An Interfacility handoff is not being updated either by surveillance data or TU messages e. An intrafacility transfer of a track that was previously handed off to an external facility will indicate the receiving position and then revert to the external facility.	3.1.7 3.1.10	3.1.7.2 The system must [STARS-082] process Arrival, Departure, and Overflight Flight Plans generated internally by an adjacent Terminal facility. 3.1.7.3 The system must [STARS-083] process Arrival, Departure, and Overflight Flight Plans generated internally by an ARTCC. 3.1.7.4 The system must [STARS-084] initiate and accept manual handoffs of flights between itself and an ARTCC. 3.1.7.5 The system must [STARS-085] initiate and accept automatic handoffs of flights, based upon adaptation criteria, between itself and an ARTCC. 3.1.7.6 The system must [STARS-086] initiate and accept manual handoffs of flights between itself and an adjacent Terminal facility. 3.1.7.7 The system must [STARS-087] initiate and accept automatic handoffs of flights, based upon adaptation criteria, between itself and an adjacent Terminal facility. 3.1.7.8 The system must [STARS-088] initiate and accept manual handoffs of flights between two TCPs within the facility. 3.1.7.9 The system must [STARS-089] initiate and accept automatic handoffs of flights, based upon adaptation criteria, between two TCPs within the facility. 3.1.10.9 The system must [STARS-139] display aircraft status at each TCP. 3.1.10.11 The system must [STARS-141] display aircraft information in the form of data blocks.

3.2.1.1.11.3.11	3	STARS-SSD-00887	When a handoff is initiated, the sending or receiving TCP shall[3] display the receiving TCP symbol, and the aircraft's slot marker if available, until the handoff is accepted or recalled.	3.1.7 3.1.10	3.1.7.4 The system must [STARS-084] initiate and accept manual handoffs of flights between itself and an ARTCC. 3.1.7.5 The system must [STARS-085] initiate and accept automatic handoffs of flights, based upon adaptation criteria, between itself and an ARTCC. 3.1.7.6 The system must [STARS-086] initiate and accept manual handoffs of flights between itself and an adjacent Terminal facility. 3.1.7.7 The system must [STARS-087] initiate and accept automatic handoffs of flights, based upon adaptation criteria, between itself and an adjacent Terminal facility. 3.1.7.8 The system must [STARS-088] initiate and accept manual handoffs of flights between two TCPs within the facility. 3.1.7.9 The system must [STARS-089] initiate and accept automatic handoffs of flights, based upon adaptation criteria, between two TCPs within the facility. 3.1.10.20 The system must [STARS-150] display the identity of both TCPs during track handoff.

3.2.1.1.11.3.11	4	STARS-SSD-00888	When adapted a redirected inter or intrafacility handoff shall[4] display "RD", for an adaptable period, in the FDB of the handoff initiator (if applicable), the redirection initiator, and the handoff receiver.	3.1.7 3.1.10	3.1.7.4 The system must [STARS-084] initiate and accept manual handoffs of flights between itself and an ARTCC. 3.1.7.5 The system must [STARS-085] initiate and accept automatic handoffs of flights, based upon adaptation criteria, between itself and an ARTCC. 3.1.7.6 The system must [STARS-086] initiate and accept manual handoffs of flights between itself and an adjacent Terminal facility. 3.1.7.7 The system must [STARS-087] initiate and accept automatic handoffs of flights, based upon adaptation criteria, between itself and an adjacent Terminal facility. 3.1.7.8 The system must [STARS-088] initiate and accept manual handoffs of flights between two TCPs within the facility. 3.1.7.9 The system must [STARS-089] initiate and accept automatic handoffs of flights, based upon adaptation criteria, between two TCPs within the facility. 3.1.10.9 The system must [STARS-139] display aircraft status at each TCP. 3.1.10.11 The system must [STARS-141] display aircraft information in the form of data blocks.
3.2.1.1.11.3.12	1	STARS-SSD-00889	The data block shall[1] indicate when an unreasonable Mode C or negative altitude is received for an aircraft.	3.1.10	3.1.10.11 The system must [STARS-141] display aircraft information in the form of data blocks.
3.2.1.1.11.3.14	1	STARS-SSD-00890	The data block shall[1] uniquely indicate when an aircraft leaves the adapted sensor coverage area, but is still under the control of a TCP.	3.1.2 3.1.10	3.1.2.1 The system must [STARS-011] automatically track all primary surveillance targets within a geographic area defined by SA parameters. 3.1.2.2 The system must [STARS-012] automatically track all secondary surveillance targets within a geographic area defined by SA parameters. 3.1.10.9 The system must [STARS-139] display aircraft status at each TCP. 3.1.10.11 The system must [STARS-141] display aircraft information in the form of data blocks.

3.2.1.1.11.3.15	1	STARS-SSD-00891	When pointout is initiated, the initiating and receiving TCPs shall[1] display an attention getting attribute, such as “PO”, in the data block.	3.1.10	3.1.10.9 The system must [STARS-139] display aircraft status at each TCP. 3.1.10.11 The system must [STARS-141] display aircraft information in the form of data blocks. 3.1.10.12 The system must [STARS-142] allow each site to define the content of data blocks in site adaptation.
3.2.1.1.11.3.15	3	STARS-SSD-00892	The initiating TCP for an inter or intrafacility pointout shall[3] indicate in the data block whether the pointout has been accepted or rejected.	3.1.10	3.1.10.9 The system must [STARS-139] display aircraft status at each TCP. 3.1.10.11 The system must [STARS-141] display aircraft information in the form of data blocks. 3.1.10.12 The system must [STARS-142] allow each site to define the content of data blocks in site adaptation.
3.2.1.1.11.3.15	4	STARS-SSD-00893	When pointout is accepted or rejected, the receiving TCP data block shall[4] be, a full data block displayed in the pointout accepted state or returned to a state having no indication of a pointout, respectively.	3.1.10	3.1.10.9 The system must [STARS-139] display aircraft status at each TCP. 3.1.10.11 The system must [STARS-141] display aircraft information in the form of data blocks. 3.1.10.12 The system must [STARS-142] allow each site to define the content of data blocks in site adaptation.
3.2.1.1.11.3.15	6	STARS-SSD-00894	When an intrafacility pointout handoff is accepted, the initiating TCP data block shall[6] display the same indication as a normal intrafacility handoff accept.	3.1.10	3.1.10.9 The system must [STARS-139] display aircraft status at each TCP. 3.1.10.11 The system must [STARS-141] display aircraft information in the form of data blocks. 3.1.10.12 The system must [STARS-142] allow each site to define the content of data blocks in site adaptation.

3.2.1.1.11.3.15	7	STARS-SSD-00895	A full data block in the pointout accepted state shall[7] be displayed in the Pointout Accepted or Attention color based respectively on non-blinking or blinking fields.	3.1.10	3.1.10.9 The system must [STARS-139] display aircraft status at each TCP. 3.1.10.11 The system must [STARS-141] display aircraft information in the form of data blocks. 3.1.10.12 The system must [STARS-142] allow each site to define the content of data blocks in site adaptation.
3.2.1.1.11.3.15	8	STARS-SSD-00896	A data block displayed in the pointout accepted state shall[8] no longer appear in that state when handoff is initiated or ownership is changed to that TCP.	3.1.10	3.1.10.9 The system must [STARS-139] display aircraft status at each TCP. 3.1.10.11 The system must [STARS-141] display aircraft information in the form of data blocks. 3.1.10.12 The system must [STARS-142] allow each site to define the content of data blocks in site adaptation.
3.2.1.1.11.3.15	11	STARS-SSD-00897	When the Pointout Accept History Function is enabled, a count of TCPs in the pointout accept history shall[11] be displayed based on adaptation.	3.1.10	3.1.10.2 The system must [STARS-132], based upon adaptation, display general information for the facility at each TCP.
3.2.1.1.11.3.16	1	STARS-SSD-00898	The data block shall[1] indicate when an aircraft's position is being updated from interfacility message data or only search radar returns.	3.1.2 3.1.10	3.1.2.1 The system must [STARS-011] automatically track all primary surveillance targets within a geographic area defined by SA parameters. 3.1.10.9 The system must [STARS-139] display aircraft status at each TCP. 3.1.10.11 The system must [STARS-141] display aircraft information in the form of data blocks.
3.2.1.1.11.3.18	1	STARS-SSD-00899	The scratch pad data fields shall[1] provide predefined information based on flight status, fix information, geographic area and adaptation.	3.1.10	3.1.10.2 The system must [STARS-132], based upon adaptation, display general information for the facility at each TCP. 3.1.10.9 The system must [STARS-139] display aircraft status at each TCP. 3.1.10.10 The system must [STARS-140] display flight plan information at each TCP.

3.2.1.1.11.3.18	2	STARS-SSD-00900	When TCP entry is made to delete scratch pad data it shall[2] be removed regardless of how it was placed there.	3.1.9	3.1.9.5 The system must [STARS-115] provide a controller with the ability to manipulate the presentation of information on an individual situation display.
3.2.1.1.11.3.18	3	STARS-SSD-00901	When a TCP or automation system entry is made to either of a track's scratch pad fields, and that data does not match the current respective scratch pad, then the current data will be saved, and the track's scratch pad shall[3] be updated with the new data.	3.1.9	3.1.9.5 The system must [STARS-115] provide a controller with the ability to manipulate the presentation of information on an individual situation display.
3.2.1.1.11.3.18	4	STARS-SSD-00902	When a TCP entry is made to either of a track's scratch pad fields that match the current field, the entry will be discarded and the track's scratch pad shall[4] be updated with the previously saved scratch pad data.	3.1.9	3.1.9.5 The system must [STARS-115] provide a controller with the ability to manipulate the presentation of information on an individual situation display.
3.2.1.1.11.3.18	5	STARS-SSD-00903	TCP input shall[5] specify the default Automatic Scratchpad text for an adapted Scratchpad Group or set of scratchpad criteria.	3.1.9	3.1.9.5 The system must [STARS-115] provide a controller with the ability to manipulate the presentation of information on an individual situation display.
3.2.1.1.11.3.18	6	STARS-SSD-00904	When TCP input has updated the default Automatic Scratchpad text for a Scratchpad Group, the scratchpad shall[6] be updated with the new text in each inactive flight plan that matches adaptation criterea unless the scratchpad was previously entered by TCP command.	3.1.9	3.1.9.5 The system must [STARS-115] provide a controller with the ability to manipulate the presentation of information on an individual situation display.

3.2.1.1.11.3.19	1	STARS-SSD-00905	The data block shall[1] remain in the last displayed position when an aircraft in hold or handoff has not received a surveillance report update for an adapted time or exits the adapted geographic area for the selected sensor.	3.1.2 3.1.7 3.1.10	3.1.2.1 The system must [STARS-011] automatically track all primary surveillance targets within a geographic area defined by SA parameters. 3.1.2.2 The system must [STARS-012] automatically track all secondary surveillance targets within a geographic area defined by SA parameters. 3.1.7.4 The system must [STARS-084] initiate and accept manual handoffs of flights between itself and an ARTCC. 3.1.7.5 The system must [STARS-085] initiate and accept automatic handoffs of flights, based upon adaptation criteria, between itself and an ARTCC. 3.1.7.6 The system must [STARS-086] initiate and accept manual handoffs of flights between itself and an adjacent Terminal facility. 3.1.7.7 The system must [STARS-087] initiate and accept automatic handoffs of flights, based upon adaptation criteria, between itself and an adjacent Terminal facility. 3.1.7.8 The system must [STARS-088] initiate and accept manual handoffs of flights between two TCPs within the facility. 3.1.7.9 The system must [STARS-089] initiate and accept automatic handoffs of flights, based upon adaptation criteria, between two TCPs within the facility. 3.1.10.11 The system must [STARS-141] display aircraft information in the form of data blocks.
3.2.1.1.11.3.19	4	STARS-SSD-00906	The data block shall[4] remain in the last displayed position when an aircraft in FMA Surveillance alert condition has not received a surveillance report update for an adapted time.	3.1.2 3.1.10	3.1.2.1 The system must [STARS-011] automatically track all primary surveillance targets within a geographic area defined by SA parameters. 3.1.2.2 The system must [STARS-012] automatically track all secondary surveillance targets within a geographic area defined by SA parameters. 3.1.10.11 The system must [STARS-141] display aircraft information in the form of data blocks. 3.1.10.28 The system must [STARS-158] generate FMA visual alerts.

3.2.1.1.11.3.20	1	STARS-SSD-00907	The data block shall[1] indicate when a track has not correlated based on adaptation.	3.1.10	3.1.10.9 The system must [STARS-139] display aircraft status at each TCP. 3.1.10.11 The system must [STARS-141] display aircraft information in the form of data blocks.
3.2.1.1.11.3.21	1	STARS-SSD-00908	For those positions that are displaying a suspended track, the target shall[1] have the owner's assigned list line number, if any, adjacent to the track position symbol.	3.1.10	3.1.10.9 The system must [STARS-139] display aircraft status at each TCP.
3.2.1.1.11.3.21	2	STARS-SSD-00909	Upon TCP entry identifying a suspended flight plan associated to an active track, the current altitude information shall[2] be displayed in the suspended tracks data block, next to the list line number and or the Readout Area.	3.1.9 3.1.10	3.1.9.3 The system must [STARS-113] provide for controller manipulation of tracked aircraft status. 3.1.10.9 The system must [STARS-139] display aircraft status at each TCP. 3.1.10.11 The system must [STARS-141] display aircraft information in the form of data blocks.
3.2.1.1.11.3.22	1	STARS-SSD-00910	The data block shall[1] indicate when a flight has flight plan data received from an adjacent TRACON.	3.1.7 3.1.10	3.1.7.1 The system must [STARS-081] receive and transmit NAS Flight Plan in¬formation between STARS and an Air Route Traffic Control Center (ARTCC). 3.1.10.9 The system must [STARS-139] display aircraft status at each TCP. 3.1.10.11 The system must [STARS-141] display aircraft information in the form of data blocks.
3.2.1.1.11.3.23	1	STARS-SSD-00911	The data block of an unassociated track transponding an adapted beacon code shall[1] display and blink the ACID adapted for that beacon code.	3.1.10	3.1.10.9 The system must [STARS-139] display aircraft status at each TCP. 3.1.10.11 The system must [STARS-141] display aircraft information in the form of data blocks.
3.2.1.1.11.3.24	1	STARS-SSD-00912	The full data block of a track, excluding line 0, shall[1] be displayed at the owning TCP with all fields not blinking displayed in the Data Block Owned color, and all blinking fields in the Data Block Owned - Blink color.	3.1.10	3.1.10.9 The system must [STARS-139] display aircraft status at each TCP. 3.1.10.11 The system must [STARS-141] display aircraft information in the form of data blocks.

3.2.1.1.11.3.24	2	STARS-SSD-00913	The data block of a track, excluding line 0, shall[2] be displayed at the non-owning TCP with all fields not blinking displayed in the Data Block color, and all blinking fields displayed in the Data Block - Blink color.	3.1.10	3.1.10.9 The system must [STARS-139] display aircraft status at each TCP. 3.1.10.11 The system must [STARS-141] display aircraft information in the form of data blocks.
3.2.1.1.11.3.24	3	STARS-SSD-00914	When an external facility accepts a handoff from STARS and then hands off the track to a position other than the previous owner, the track's data block color shall[3] remain unchanged at the previous owner's position.	3.1.7 3.1.10	3.1.7.4 The system must [STARS-084] initiate and accept manual handoffs of flights between itself and an ARTCC. 3.1.7.5 The system must [STARS-085] initiate and accept automatic handoffs of flights, based upon adaptation criteria, between itself and an ARTCC. 3.1.7.6 The system must [STARS-086] initiate and accept manual handoffs of flights between itself and an adjacent Terminal facility. 3.1.7.7 The system must [STARS-087] initiate and accept automatic handoffs of flights, based upon adaptation criteria, between itself and an adjacent Terminal facility. 3.1.7.8 The system must [STARS-088] initiate and accept manual handoffs of flights between two TCPs within the facility. 3.1.7.9 The system must [STARS-089] initiate and accept automatic handoffs of flights, based upon adaptation criteria, between two TCPs within the facility. 3.1.10.9 The system must [STARS-139] display aircraft status at each TCP. 3.1.10.11 The system must [STARS-141] display aircraft information in the form of data blocks.
3.2.1.1.11.3.25	1	STARS-SSD-00915	The datablock shall[1] indicate a flight on an RNAV route.	3.1.7 3.1.10	3.1.7.2 The system must [STARS-082] process Arrival, Departure, and Overflight Flight Plans generated internally by an adjacent Terminal facility. 3.1.7.3 The system must [STARS-083] process Arrival, Departure, and Overflight Flight Plans generated internally by an ARTCC. 3.1.10.11 The system must [STARS-141] display aircraft information in the form of data blocks.

3.2.1.1.11.3.25	2	STARS-SSD-00916	A flight shall[2] be assigned a RNAV status indicator when its fix pair matches an RNAV route in adaptation, excluding VFR interfacility flight data entry, or a manual assignment of an RNAV status indicator.	3.1.7 3.1.9 3.1.10	3.1.7.2 The system must [STARS-082] process Arrival, Departure, and Overflight Flight Plans generated internally by an adjacent Terminal facility. 3.1.7.3 The system must [STARS-083] process Arrival, Departure, and Overflight Flight Plans generated internally by an ARTCC. 3.1.9.3 The system must [STARS-113] provide for controller manipulation of tracked aircraft status. 3.1.9.4 The system must [STARS-114] provide the controller with control over flight plan information. 3.1.10.9 The system must [STARS-139] display aircraft status at each TCP. 3.1.10.11 The system must [STARS-141] display aircraft information in the form of data blocks.
3.2.1.1.11.3.25	3	STARS-SSD-00917	A flight's RNAV Status Indicator shall[3] be cleared upon TCP entry to remove status, modify fix pair to non-RNAV fix pair prior to the STARS system controlling the flight or the flight enters an RNAV Status Delete Region.	3.1.10	3.1.10.9 The system must [STARS-139] display aircraft status at each TCP. 3.1.10.11 The system must [STARS-141] display aircraft information in the form of data blocks.
3.2.1.1.11.3.25	4	STARS-SSD-00918	An RNAV Status Delete Region shall[4] remove RNAV status from a flight when enabled and adaption matches flights conditions.	3.1.10	3.1.10.9 The system must [STARS-139] display aircraft status at each TCP. 3.1.10.11 The system must [STARS-141] display aircraft information in the form of data blocks.
3.2.1.1.11.3.26	1	STARS-SSD-00919	When the Cursor Dwell Functionality is enabled at a TCP, and the pointer device is slewed within a site adaptable dwell distance and time for an associated or unassociated data block, the track and associated ATPA and/or TSAS data shall[1] be placed in a Dwell State where every displayable portion of the data block is shown at 100% brightness until the cursor is no longer within the dwell distance from the track.	3.1.9 3.1.10	3.1.9.5 The system must [STARS-115] provide a controller with the ability to manipulate the presentation of information on an individual situation display. 3.1.10.9 The system must [STARS-139] display aircraft status at each TCP. 3.1.10.11 The system must [STARS-141] display aircraft information in the form of data blocks.

3.2.1.1.11.3.26	2	STARS-SSD-00920	When the Cursor Dwell is attempted and there are multiple tracks within that dwell distance from the cursor, the track closest to the cursor shall[2] be placed in a Dwell state.	3.1.9 3.1.10	3.1.9.5 The system must [STARS-115] provide a controller with the ability to manipulate the presentation of information on an individual situation display. 3.1.10.9 The system must [STARS-139] display aircraft status at each TCP. 3.1.10.11 The system must [STARS-141] display aircraft information in the form of data blocks.
3.2.1.1.11.3.26	3	STARS-SSD-00921	If the closest tracks are the same distance from the cursor, no track shall[3] be placed in a Dwell State.	3.1.9 3.1.10	3.1.9.5 The system must [STARS-115] provide a controller with the ability to manipulate the presentation of information on an individual situation display. 3.1.10.9 The system must [STARS-139] display aircraft status at each TCP. 3.1.10.11 The system must [STARS-141] display aircraft information in the form of data blocks.
3.2.1.1.11.3.26	4	STARS-SSD-00922	All data block types shall[4] be capable of being displayed in a Dwell State, regardless of ownership.	3.1.9 3.1.10	3.1.9.5 The system must [STARS-115] provide a controller with the ability to manipulate the presentation of information on an individual situation display. 3.1.10.9 The system must [STARS-139] display aircraft status at each TCP. 3.1.10.11 The system must [STARS-141] display aircraft information in the form of data blocks.
3.2.1.1.11.3.26	7	STARS-SSD-00923	If adapted and the radius of a TPA J-Ring or TPA/ATPA Cone is inhibited, the radius shall[7] be displayed while the track is in the Dwell state.	3.1.9 3.1.10	3.1.9.5 The system must [STARS-115] provide a controller with the ability to manipulate the presentation of information on an individual situation display. 3.1.10.9 The system must [STARS-139] display aircraft status at each TCP. 3.1.10.11 The system must [STARS-141] display aircraft information in the form of data blocks.

3.2.1.1.11.3.26	8	STARS-SSD-00924	When the Cursor Dwell Functionality is enabled at the TCP, and the pointer device is slewed within a track's slot marker or over the information for a flight in any Timeline window, and the cursor remains in that position for a site adaptable dwell interval, the corresponding track shall[8] be placed in a Dwell State as described above. Unless dwell lock is inhibited at the TCP, the track will remain in the Dwell State until the cursor is moved.	3.1.9 3.1.10	3.1.9.5 The system must [STARS-115] provide a controller with the ability to manipulate the presentation of information on an individual situation display. 3.1.10.9 The system must [STARS-139] display aircraft status at each TCP. 3.1.10.11 The system must [STARS-141] display aircraft information in the form of data blocks.
3.2.1.1.11.3.27	1	STARS-SSD-00925	When a flight is deemed ineligible for RVSM separation standards all altitude fields shall[1] appear in the adapted RVSM Ineligible color.	3.1.10	3.1.10.9 The system must [STARS-139] display aircraft status at each TCP. 3.1.10.11 The system must [STARS-141] display aircraft information in the form of data blocks.
3.2.1.1.11.3.28	1	STARS-SSD-00926	A flight plan that was suspended due to beacon code mismatch, or an Initiate Transfer replacing the flight plan, shall[1] be automatically unsuspended when it associates to a track.	3.1.2 3.1.7	3.1.2.5 The system must [STARS-015] automatically change an unassociated track to an associated track, and vice versa, when geographical, status, and empirical parameters are satisfied. 3.1.7.2 The system must [STARS-082] process Arrival, Departure, and Overflight Flight Plans generated internally by an adjacent Terminal facility. 3.1.7.3 The system must [STARS-083] process Arrival, Departure, and Overflight Flight Plans generated internally by an ARTCC. 3.1.7.4 The system must [STARS-084] initiate and accept manual handoffs of flights between itself and an ARTCC. 3.1.7.5 The system must [STARS-085] initiate and accept automatic handoffs of flights, based upon adaptation criteria, between itself and an ARTCC. 3.1.7.6 The system must [STARS-086] initiate and accept manual handoffs of flights between itself and an adjacent Terminal facility. 3.1.7.7 The system must [STARS-087] initiate and accept automatic handoffs of flights, based upon adaptation criteria, between itself and an adjacent Terminal facility. 3.1.7.8 The system must [STARS-088] initiate and accept manual handoffs of flights between two TCPs within the facility. 3.1.7.9 The system must [STARS-089] initiate and accept automatic handoffs of

					flights, based upon adaptation criteria, between two TCPs within the facility.
3.2.1.1.11.3.28	2	STARS-SSD-00927	To indicate the need for manual coordination, the data block shall[2] indicate when a track has associated to a flight plan with departure status, and had previously disassociated due to a beacon code mismatch.	3.1.10	3.1.10.9 The system must [STARS-139] display aircraft status at each TCP. 3.1.10.10 The system must [STARS-140] display flight plan information at each TCP. 3.1.10.11 The system must [STARS-141] display aircraft information in the form of data blocks.
3.2.1.1.11.4.1	1	STARS-SSD-00928	Data fields shall[1] form data block types and data lists per adaptation.	3.1.10	3.1.10.11 The system must [STARS-141] display aircraft information in the form of data blocks. 3.1.10.12 The system must [STARS-142] allow each site to define the content of data blocks in site adaptation.

3.2.1.1.11.4.1	2	STARS-SSD-00929	The following data fields shall[2], based on adaptation, be available in either a data block or list: a. Aircraft Type b. Aircraft Identification (ACID) c. Airport Identifier d. Arrival Time e. Controller Assigned, Requested or Entered Altitude f. Assigned & Reported Beacon Code g. Flight Plan Requested Altitude h. Departure Time i. TCP Indicator j. Entry/Exit Fix k. Flight Status l. Ground Speed m. Information Transfer Indicator n. Data List Line Identifier o. Corrected Mode C Altitude p. Number of Aircraft in Formation q. Pointout Indicator & Initiator r. Reported Beacon Code s. Safety Alerts t. Scratch Pad u. Special Designators & Equipment Indicator v. Ident or Special Position Indicator w. Track Update Status x. Mode 2 Indication y. RNAV Status Indicator z. Arrival Airport Designator aa. Duplicate ACID or Beacon Indicator bb.No Flight Plan Indicator cc.Duplicate Departure Flight Plan Indicator dd.Duplicate Target Address Indicator	3.1.10	3.1.10.11 The system must [STARS-141] display aircraft information in the form of data blocks. 3.1.10.12 The system must [STARS-142] allow each site to define the content of data blocks in site adaptation.
3.2.1.1.11.4.2	2	STARS-SSD-00930	The Aircraft Type data field shall[2] be timeshared in the data block and enabled based upon flight and handoff status.	3.1.10	3.1.10.11 The system must [STARS-141] display aircraft information in the form of data blocks. 3.1.10.12 The system must [STARS-142] allow each site to define the content of data blocks in site adaptation.

3.2.1.1.11.4.2	3	STARS-SSD-00931	Multiple Aircraft Type Display Suppression regions shall[3] be adaptable within which the timeshare display of aircraft type is suppressed from the full data block based on flight and handoff status.	3.1.7 3.1.10	3.1.7.2 The system must [STARS-082] process Arrival, Departure, and Overflight Flight Plans generated internally by an adjacent Terminal facility. 3.1.7.3 The system must [STARS-083] process Arrival, Departure, and Overflight Flight Plans generated internally by an ARTCC. 3.1.7.4 The system must [STARS-084] initiate and accept manual handoffs of flights between itself and an ARTCC. 3.1.7.5 The system must [STARS-085] initiate and accept automatic handoffs of flights, based upon adaptation criteria, between itself and an ARTCC. 3.1.7.6 The system must [STARS-086] initiate and accept manual handoffs of flights between itself and an adjacent Terminal facility. 3.1.7.7 The system must [STARS-087] initiate and accept automatic handoffs of flights, based upon adaptation criteria, between itself and an adjacent Terminal facility. 3.1.7.8 The system must [STARS-088] initiate and accept manual handoffs of flights between two TCPs within the facility. 3.1.7.9 The system must [STARS-089] initiate and accept automatic handoffs of flights, based upon adaptation criteria, between two TCPs within the facility. 3.1.10.11 The system must [STARS-141] display aircraft information in the form of data blocks. 3.1.10.12 The system must [STARS-142] allow each site to define the content of data blocks in site adaptation.
3.2.1.1.11.4.2	4	STARS-SSD-00932	Base on adaptation an Aircraft Type Display Suppression region shall[4] be geometrically designed with aircraft type enable and disable regions within the shape and capable of being adapted to a TCP.	3.1.10	3.1.10.2 The system must [STARS-132], based upon adaptation, display general information for the facility at each TCP.
3.2.1.1.11.4.2	6	STARS-SSD-00933	If the display of aircraft type is forced, the aircraft type shall[6] be displayed with priority in the full data block for the aircraft.	3.1.10	3.1.10.11 The system must [STARS-141] display aircraft information in the form of data blocks.

3.2.1.1.11.4.2	7	STARS-SSD-00934	If the display of aircraft type is not forced, aircraft type shall[7] be displayed as a time sharing field in the full data block based on adaptation, flight and handoff status of the displaying position.	3.1.7 3.1.10	3.1.7.2 The system must [STARS-082] process Arrival, Departure, and Overflight Flight Plans generated internally by an adjacent Terminal facility. 3.1.7.3 The system must [STARS-083] process Arrival, Departure, and Overflight Flight Plans generated internally by an ARTCC. 3.1.7.4 The system must [STARS-084] initiate and accept manual handoffs of flights between itself and an ARTCC. 3.1.7.5 The system must [STARS-085] initiate and accept automatic handoffs of flights, based upon adaptation criteria, between itself and an ARTCC. 3.1.7.6 The system must [STARS-086] initiate and accept manual handoffs of flights between itself and an adjacent Terminal facility. 3.1.7.7 The system must [STARS-087] initiate and accept automatic handoffs of flights, based upon adaptation criteria, between itself and an adjacent Terminal facility. 3.1.7.8 The system must [STARS-088] initiate and accept manual handoffs of flights between two TCPs within the facility. 3.1.7.9 The system must [STARS-089] initiate and accept automatic handoffs of flights, based upon adaptation criteria, between two TCPs within the facility. 3.1.10.11 The system must [STARS-141] display aircraft information in the form of data blocks. 3.1.10.12 The system must [STARS-142] allow each site to define the content of data blocks in site adaptation.
3.2.1.1.11.4.10	1	STARS-SSD-00935	A data field shall[1] define multiple transponder indicators that are based upon a corresponding set of adapted aircraft beacon codes.	3.1.10	3.1.10.11 The system must [STARS-141] display aircraft information in the form of data blocks. 3.1.10.12 The system must [STARS-142] allow each site to define the content of data blocks in site adaptation.

3.2.1.1.11.4.16	1	STARS-SSD-00936	An Interfacility handoff data field shall[1] define the facility and position symbol of the handoff sender or receiver.	3.1.7 3.1.10	3.1.7.4 The system must [STARS-084] initiate and accept manual handoffs of flights between itself and an ARTCC. 3.1.7.5 The system must [STARS-085] initiate and accept automatic handoffs of flights, based upon adaptation criteria, between itself and an ARTCC. 3.1.7.6 The system must [STARS-086] initiate and accept manual handoffs of flights between itself and an adjacent Terminal facility. 3.1.7.7 The system must [STARS-087] initiate and accept automatic handoffs of flights, based upon adaptation criteria, between itself and an adjacent Terminal facility. 3.1.10.11 The system must [STARS-141] display aircraft information in the form of data blocks. 3.1.10.20 The system must [STARS-150] display the identity of both TCPs during track handoff.

3.2.1.1.11.4.16	2	STARS-SSD-00937	The handoff receiver data field shall[2] identify the TCP for Intrafacility or external facility for Interfacility handoffs.	3.1.7 3.1.10	3.1.7.4 The system must [STARS-084] initiate and accept manual handoffs of flights between itself and an ARTCC. 3.1.7.5 The system must [STARS-085] initiate and accept automatic handoffs of flights, based upon adaptation criteria, between itself and an ARTCC. 3.1.7.6 The system must [STARS-086] initiate and accept manual handoffs of flights between itself and an adjacent Terminal facility. 3.1.7.7 The system must [STARS-087] initiate and accept automatic handoffs of flights, based upon adaptation criteria, between itself and an adjacent Terminal facility. 3.1.7.8 The system must [STARS-088] initiate and accept manual handoffs of flights between two TCPs within the facility. 3.1.7.9 The system must [STARS-089] initiate and accept automatic handoffs of flights, based upon adaptation criteria, between two TCPs within the facility. 3.1.10.11 The system must [STARS-141] display aircraft information in the form of data blocks. 3.1.10.20 The system must [STARS-150] display the identity of both TCPs during track handoff.
3.2.1.1.11.4.26	1	STARS-SSD-00938	Data fields shall[1] define all safety alert inhibit indicators.	3.1.10	3.1.10.9 The system must [STARS-139] display aircraft status at each TCP. 3.1.10.11 The system must [STARS-141] display aircraft information in the form of data blocks.
3.2.1.1.11.4.27	2	STARS-SSD-00939	System or controller entered scratch pad data, primary or secondary shall[2] consist of up to 4 characters.	3.1.9	3.1.9.5 The system must [STARS-115] provide a controller with the ability to manipulate the presentation of information on an individual situation display.
3.2.1.1.11.4.27	3	STARS-SSD-00940	When enabled by controller input, an initial runway assignment for an arrival flight plan shall[3] be assigned automatically to one of the scratch pad fields based on various adaptation data.	3.1.9	3.1.9.4 The system must [STARS-114] provide the controller with control over flight plan information.

3.2.1.1.11.4.27	4	STARS-SSD-00941	When the secondary scratch pad is displayed, it shall[4] be immediately followed by a "+" character to identify it.	3.1.10	3.1.10.2 The system must [STARS-132], based upon adaptation, display general information for the facility at each TCP.
3.2.1.1.11.4.27	5	STARS-SSD-00942	Runway data supplied by TBFM shall[5] be displayed in a flight's scratchpad when the flight is not owned by or in handoff to STARS and the relevant scratchpad for runway data does not match adaptation.	3.1.7 3.1.10	3.1.7.4 The system must [STARS-084] initiate and accept manual handoffs of flights between itself and an ARTCC. 3.1.7.5 The system must [STARS-085] initiate and accept automatic handoffs of flights, based upon adaptation criteria, between itself and an ARTCC. 3.1.7.6 The system must [STARS-086] initiate and accept manual handoffs of flights between itself and an adjacent Terminal facility. 3.1.7.7 The system must [STARS-087] initiate and accept automatic handoffs of flights, based upon adaptation criteria, between itself and an adjacent Terminal facility. 3.1.10.10 The system must [STARS-140] display flight plan information at each TCP.
3.2.1.1.11.4.31	2	STARS-SSD-00943	Based on the surveillance systems updates and adaptation the Track Update Status data field shall[2] display an indication like CST, NAT, ADB, ISR or TRK when tracks are coasting, out of sensor coverage areas or not updated with enough accuracy to support specific separation requirements.	3.1.2 3.1.10	3.1.2.1 The system must [STARS-011] automatically track all primary surveillance targets within a geographic area defined by SA parameters. 3.1.2.2 The system must [STARS-012] automatically track all secondary surveillance targets within a geographic area defined by SA parameters. 3.1.10.9 The system must [STARS-139] display aircraft status at each TCP.
3.2.1.1.11.4.33	1	STARS-SSD-00944	A data field shall[1] define an aircraft in hold.	3.1.10	3.1.10.11 The system must [STARS-141] display aircraft information in the form of data blocks.
3.2.1.1.11.4.34	1	STARS-SSD-00945	A data field shall[1] define exit gate information comprising an adapted character representing exit fix and the two digits of requested altitude from flight plan information.	3.1.10	3.1.10.11 The system must [STARS-141] display aircraft information in the form of data blocks.
3.2.1.1.11.4.35	1	STARS-SSD-00946	A data field shall[1] define the current MOA assignment of an aircraft.	3.1.10	3.1.10.11 The system must [STARS-141] display aircraft information in the form of data blocks.

3.2.1.1.11.4.38	1	STARS-SSD-00947	A data field **shall[1]** define the source interfacility ID of a flight plan - ECID for Host flight plans or TCID for Adjacent TRACON flight plans.	3.1.10	3.1.10.11 The system must [STARS-141] display aircraft information in the form of data blocks.
3.2.1.1.11.4.40	1	STARS-SSD-00948	A data field shall[1] define an adaptable target identification field.	3.1.10	3.1.10.11 The system must [STARS-141] display aircraft information in the form of data blocks. 3.1.10.12 The system must [STARS-142] allow each site to define the content of data blocks in site adaptation.
3.2.1.1.11.4.42	1	STARS-SSD-00949	A data field shall[1] define an ADS-B/Non ADS-B indicator when enabled for display on FDBs or PDBs based on the following: a. No indication when aircraft is ADS-B equipped and operational. b. Hollow circle when aircraft is ADS-B equipped and has become non-operational. c. Filled circle when aircraft is not ADS-B equipped.	3.1.1 3.1.10	3.1.1.5 The system must [STARS-005] process ADS-B from the Surveillance Broadcast System (SBS), when available. 3.1.10.11 The system must [STARS-141] display aircraft information in the form of data blocks. 3.1.10.12 The system must [STARS-142] allow each site to define the content of data blocks in site adaptation.
3.2.1.1.11.4.43	1	STARS-SSD-00950	A data field shall[1] define the In-Trail Distance between an associated track and the closest associated track +/- 90° from the heading of the trailing track when both tracks are considered eligible for ATPA In-Trail Distance processing.	3.1.2 3.1.9	3.1.2.10 The system must [STARS-020] provide tracking data for the Automatic Terminal Proximity Alert (ATPA) 3.1.10.9 The system must [STARS-139] display aircraft status at each TCP. 3.1.10.11 The system must [STARS-141] display aircraft information in the form of data blocks.
3.2.1.1.11.4.43	2	STARS-SSD-00951	ATPA In-Trail Distance shall[2] be displayed in either the ATPA Alert color, Caution color or data block color when the track is eligible to display an ATPA Alert Cone, Warning Cone or neither respectively.	3.1.2 3.1.10	3.1.2.10 The system must [STARS-020] provide tracking data for the Automatic Terminal Proximity Alert (ATPA) 3.1.10.9 The system must [STARS-139] display aircraft status at each TCP. 3.1.10.11 The system must [STARS-141] display aircraft information in the form of data blocks. 3.1.10.25 The system must [STARS-155] generate visual alerts based upon the adaptation of each individual facility.

3.2.1.1.11.4.44	1	STARS-SSD-00952	A data field shall[1] define an indication that a weight class is unavailable for a track that qualifies for ATPA Cone processing when that TCP meets all the eligibility criteria.	3.1.2 3.1.10	3.1.2.10 The system must [STARS-020] provide tracking data for the Automatic Terminal Proximity Alert (ATPA) 3.1.10.9 The system must [STARS-139] display aircraft status at each TCP. 3.1.10.11 The system must [STARS-141] display aircraft information in the form of data blocks.
3.2.1.1.11.4.46	1	STARS-SSD-00953	A data field shall[1] define the range and magnetic bearing from the exit fix of an associated track to the smoothed track position.	3.1.2 3.1.10	3.1.2.3 The system must [STARS-013] perform ground plane tracking, using target reports from both single and multisensory surveillance systems. 3.1.10.11 The system must [STARS-141] display aircraft information in the form of data blocks.
3.2.1.1.11.4.47	1	STARS-SSD-00954	A data field shall[1] define an indicator (Default="CSMM") to be displayed when the Aircraft ID from the interfacility IFR flight plan does not match the Target ID received from the surveillance sensors.	3.1.1 3.1.7 3.1.10	3.1.1.3 The system must [STARS-003] process secondary inputs from the FAA and DoD air traffic surveillance systems. 3.1.7.2 The system must [STARS-082] process Arrival, Departure, and Overflight Flight Plans generated internally by an adjacent Terminal facility. 3.1.7.3 The system must [STARS-083] process Arrival, Departure, and Overflight Flight Plans generated internally by an ARTCC. 3.1.10.11 The system must [STARS-141] display aircraft information in the form of data blocks.

3.2.1.1.11.4.47	2	STARS-SSD-00955	A blinking ACID/Target ID mismatch indicator shall[2] be displayed when the TCP is eligible to display the condition and the mismatch has not been acknowledged.	3.1.1 3.1.7 3.1.10	3.1.1.3 The system must [STARS-003] process secondary inputs from the FAA and DoD air traffic surveillance systems. 3.1.7.2 The system must [STARS-082] process Arrival, Departure, and Overflight Flight Plans generated internally by an adjacent Terminal facility. 3.1.7.3 The system must [STARS-083] process Arrival, Departure, and Overflight Flight Plans generated internally by an ARTCC. 3.1.10.11 The system must [STARS-141] display aircraft information in the form of data blocks.
3.2.1.1.11.4.48	1	STARS-SSD-00956	A data field shall[1] define an indication, for an adapted period of time, that a flight plan, not under the control of an external facility, has been disassociated from its track due to beacon code mismatch or Initiate Transfer replacing the flight plan.	3.1.2	3.1.2.5 The system must [STARS-015] automatically change an unassociated track to an associated track, and vice versa, when geographical, status, and empirical parameters are satisfied. 3.1.7.2 The system must [STARS-082] process Arrival, Departure, and Overflight Flight Plans generated internally by an adjacent Terminal facility. 3.1.7.3 The system must [STARS-083] process Arrival, Departure, and Overflight Flight Plans generated internally by an ARTCC. 3.1.10.11 The system must [STARS-141] display aircraft information in the form of data blocks.

3.2.1.1.11.4.49	1	STARS-SSD-00957	A TSAS data field as reported by TBFM shall[1] be defined for the following: a. Advised airspeed and its associated meter point if the difference from the track airspeed exceeds the threshold set at that TCP b. The early/late indicator calculated for a flight if there is no advised airspeed c. The calculated scheduled and estimated time remaining until arrival for a flight d. An RNP Capability indicator e. The runway sequence number calculated for a flight when enabled for display at the TCP f. The scheduled runway for a flight when it is different from the runway in scratchpad and that scratchpad is not an adapted alias for the scheduled runway g. The track airspeed.	(Derived)	(Derived)
3.2.1.1.11.5.1	1	STARS-SSD-00958	All target and map data shall[1] be displayed in radar coordinates.	3.1.10	3.1.10.7 The system must [STARS-137] display a target indicator at the position of each surveillance target received in single sensor mode. 3.1.10.8 The system must [STARS-138] display a target indicator at the composite position of each surveillance target received in multi-sensor and Fusion modes. 3.1.10.14 The system must [STARS-144] display geographic digital maps.
3.2.1.1.11.5.2.1	1	STARS-SSD-00959	The capability shall[1] exist to define multiple data block types that include any combination of the specified data fields based on adaptation.	3.1.10	3.1.10.11 The system must [STARS-141] display aircraft information in the form of data blocks. 3.1.10.12 The system must [STARS-142] allow each site to define the content of data blocks in site adaptation.
3.2.1.1.11.5.2.1	2	STARS-SSD-00960	The capability shall[2] exist to apply adapted data block type selection criteria separately to individually adapted display positions according to their associated TCPs.	3.1.10	3.1.10.11 The system must [STARS-141] display aircraft information in the form of data blocks. 3.1.10.12 The system must [STARS-142] allow each site to define the content of data blocks in site adaptation.

3.2.1.1.11.5.2.1	3	STARS-SSD-00961	The capability shall[3] exist to define a secondary data block that includes an adaptable combination of the data fields in Section 3.2.1.1.11.4, Data Fields.	3.1.10	3.1.10.11 The system must [STARS-141] display aircraft information in the form of data blocks. 3.1.10.12 The system must [STARS-142] allow each site to define the content of data blocks in site adaptation.
3.2.1.1.11.5.2.2	1	STARS-SSD-00962	The data block sizing shall[1] permit an adaptable definition of data elements to include at least five lines with each containing up to 20 characters including blanks and uniquely defined in adaptation.	3.1.10	3.1.10.11 The system must [STARS-141] display aircraft information in the form of data blocks. 3.1.10.12 The system must [STARS-142] allow each site to define the content of data blocks in site adaptation.
3.2.1.1.11.5.2.3	1	STARS-SSD-00963	All data fields in a data block shall[1] have the capability to share the same area by alternating the display of 2, 3 or 4 data fields over a set time, per adaptation.	3.1.10	3.1.10.11 The system must [STARS-141] display aircraft information in the form of data blocks. 3.1.10.12 The system must [STARS-142] allow each site to define the content of data blocks in site adaptation.
3.2.1.1.11.5.2.3	2	STARS-SSD-00964	The time duration of each timeshare display phase shall[2] be adaptable between 0.5 and 5.0 seconds in 0.1 second increments.	3.1.10	3.1.10.11 The system must [STARS-141] display aircraft information in the form of data blocks. 3.1.10.12 The system must [STARS-142] allow each site to define the content of data blocks in site adaptation.
3.2.1.1.11.5.2.3	3	STARS-SSD-00965	When a track is in certain alert conditions, the priority of altitude data shall[3] be increased above that of other data in timeshare display phases. When the track is in handoff and Mode C data is unavailable, the pilot-reported altitude will be displayed in clock phase 1 during an LA alert condition.	3.1.2 3.1.10	3.1.2.4 The system must [STARS-014] perform altitude tracking, using target reports from both single and multisensory surveillance systems. 3.1.10.11 The system must [STARS-141] display aircraft information in the form of data blocks. 3.1.10.12 The system must [STARS-142] allow each site to define the content of data blocks in site adaptation.
3.2.1.1.11.5.2.3	4	STARS-SSD-00966	When multiple data fields time share the same area of a data block, adaptation shall[4] determine the sequence of the fields to be displayed.	3.1.10	3.1.10.11 The system must [STARS-141] display aircraft information in the form of data blocks. 3.1.10.12 The system must [STARS-142] allow each site to define the content of data blocks in site adaptation.

3.2.1.1.11.5.2.4	1	STARS-SSD-00967	Data fields that occupy the same position in a data block shall[1] allow adaptable priorities to be assigned to control their display.	3.1.10	3.1.10.11 The system must [STARS-141] display aircraft information in the form of data blocks. 3.1.10.12 The system must [STARS-142] allow each site to define the content of data blocks in site adaptation.
3.2.1.1.11.5.2.5	1	STARS-SSD-00968	Per adaptation the leader line shall[1] point from the displayed target to any line of the data block and will not overlay any portion.	3.1.10	3.1.10.11 The system must [STARS-141] display aircraft information in the form of data blocks.
3.2.1.1.11.5.2.5	3	STARS-SSD-00969	When an owning TCP displays a new leader line direction for an associated track, the event shall[3] be recorded.	3.1.10 3.1.11	3.1.10.11 The system must [STARS-141] display aircraft information in the form of data blocks. 3.1.10.12 The system must [STARS-142] allow each site to define the content of data blocks in site adaptation. 3.1.11.3 The system must [STARS-173] record all data necessary to recreate system status, performance, environment, and situation displays.
3.2.1.1.11.5.2.6	1	STARS-SSD-00970	When the ownership of a track changes as a result of full consolidation, the default leader line orientation shall[1] become that of the receiving TCP.	3.1.10	3.1.10.11 The system must [STARS-141] display aircraft information in the form of data blocks.
3.2.1.1.11.5.2.7	1	STARS-SSD-00971	Data block leader line direction shall[1] be based upon a combination of system status and adaptation.	3.1.10	3.1.10.11 The system must [STARS-141] display aircraft information in the form of data blocks.
3.2.1.1.11.5.2.8	1	STARS-SSD-00972	Control of the color and blink condition of any data block field shall[1] be adaptable.	3.1.10	3.1.10.11 The system must [STARS-141] display aircraft information in the form of data blocks.
3.2.1.1.11.5.2.9	1	STARS-SSD-00973	The color priority for full, partial and limited data blocks shall[1] follow an established priority hierarchy.	3.1.10	3.1.10.11 The system must [STARS-141] display aircraft information in the form of data blocks.
3.2.1.1.11.5.3.1	1	STARS-SSD-00974	The TCW and TDW shall[1] display air traffic data from integrated multiple sensors as a single display view.	3.1.10	3.1.10.7 The system must [STARS-137] display a target indicator at the position of each surveillance target received in single sensor mode. 3.1.10.8 The system must [STARS-138] display a target indicator at the composite position of each surveillance target received in multi-sensor and Fusion modes.

3.2.1.1.11.5.3.1	2	STARS-SSD-00975	In multiple sensor view, the TCW and TDW shall[2] display air traffic data from integrated multiple sensors in either a reported or fused view.	3.1.10	3.1.10.7 The system must [STARS-137] display a target indicator at the position of each surveillance target received in single sensor mode. 3.1.10.8 The system must [STARS-138] display a target indicator at the composite position of each surveillance target received in multi-sensor and Fusion modes.
3.2.1.1.11.5.3.2	1	STARS-SSD-00976	The TCW and TDW shall[1] display air traffic data in either single sensor ground, single sensor slant or PAM position display view.	3.1.10	3.1.10.22 Each TCW must [STARS-152] have a single sensor slant range display presentation mode. 3.1.10.23 Each TCW must [STARS-153] have a single sensor ground plane display presentation mode.
3.2.1.1.11.5.4	1	STARS-SSD-00977	The TCW and TDW shall[1] display a minimum of 10 digital maps simultaneously or individually.	3.1.10	3.1.10.14 The system must [STARS-144] display geographic digital maps.
3.2.1.1.11.5.4	2	STARS-SSD-00978	When display setting is at minimum range, digital map elements separated by a distance that corresponds to the separation of adjacent display pixels shall[2] be displayed as separate pixels.	3.1.10	3.1.10.14 The system must [STARS-144] display geographic digital maps.
3.2.1.1.11.5.5	1	STARS-SSD-00979	A track that is not eligible for quicklook plus, but is eligible for quicklook or regional quicklook shall[1] display a full data block in the adapted Data Block Unowned color.	3.1.10	3.1.10.11 The system must [STARS-141] display aircraft information in the form of data blocks. 3.1.10.12 The system must [STARS-142] allow each site to define the content of data blocks in site adaptation.
3.2.1.1.11.5.5	2	STARS-SSD-00980	A track that is eligible for quicklook plus shall[2] display a full data block in the adapted Data Block Owned color.	3.1.10	3.1.10.11 The system must [STARS-141] display aircraft information in the form of data blocks. 3.1.10.12 The system must [STARS-142] allow each site to define the content of data blocks in site adaptation.
3.2.1.1.11.5.6	1	STARS-SSD-00981	The TCW and TDW shall[1] display symmetric circular range rings at a minimum of 2, 5, 10, and 20 nmi intervals centered on any point.	3.1.10	3.1.10.15 The system must [STARS-145] display range marks.
3.2.1.1.11.5.7	1	STARS-SSD-00982	The TCW and TDW shall[1] display the name of a selected altitude or geographic restriction area and the associated altitude restriction at an adapted location on the display.	3.1.10	3.1.10.2 The system must [STARS-132], based upon adaptation, display general information for the facility at each TCP.
3.2.1.1.11.5.9.1.1	1	STARS-SSD-00983	When CA/MCI is enabled, the TCW and TDW shall[1] blink safety alerts at the owner's TCP when the aircraft is in conflict.	3.1.10	3.1.10.25 The system must [STARS-155] generate visual alerts based upon the adaptation of each individual facility.

3.2.1.1.11.5.9.1.1	2	STARS-SSD-00984	When CA/MCI is enabled, the TCW and TDW shall[2] blink safety alerts at the previous owner's TCP when the full data block is displayed in the Data Block Owned/Previously Owned color, blink color, or regardless of color as well as non-owning TCPs with full data blocks, when adapted.	3.1.10	3.1.10.25 The system must [STARS-155] generate visual alerts based upon the adaptation of each individual facility.
3.2.1.1.11.5.9.1.2	1	STARS-SSD-00985	When CA/MCI is enabled and the aircraft is not located within an aural alarm inhibit region, the TCW and TDW shall[1] sound the aural alarm at the owner's TCP when adapted and: a. The aircraft is in conflict b. The FDB is in Data Block Owned/Previously Owned color or blink color at the previous owner's TCP c. The FDB is displayed at a non-owning TCP d. Or, the FDB is displayed at the previous physical TCP.	3.1.10	3.1.10.26 The system must [STARS-156] generate aural alarms based upon the adaptation of each individual TCP.
3.2.1.1.11.5.9.2.1	1	STARS-SSD-00986	When MSAW is enabled, the TCW and TDW shall[1] blink safety alerts at the owner's TCP when adapted and: a. The aircraft is in MSAW b. The FDB is in Data Block Owned/Previously Owned color or blink color at the previous owner's TCP c. The FDB is displayed at a non-owning TCP d. Or, the FDB is displayed at the previous physical TCP.	3.1.10	3.1.10.33 The system must [STARS-163] generate MSAW visual alerts.
3.2.1.1.11.5.9.2.2	1	STARS-SSD-00987	When MSAW is enabled and the aircraft is not located within an aural alarm inhibit region, the TCW and TDW shall[1] sound the aural alarm at the owner's TCP when adapted and: a. The aircraft is in MSAW b. The FDB is in Data Block Owned/Previously Owned color or blink color at the previous owner's TCP c. The FDB is displayed at a non-owning TCP d. Or, the FDB is displayed at the previous physical TCP.	3.1.10	3.1.10.11 The system must [STARS-141] display aircraft information in the form of data blocks. 3.1.10.34 The system must [STARS-164] generate MSAW aural alarms.
3.2.1.1.11.5.9.3	1	STARS-SSD-00988	FMA alert processing shall[1] be inhibited for any track that is displayed as unassociated.	3.1.10	3.1.10.30 The system must [STARS-160] enable and disable FMA aural alerts at each TCP via manual entry.

3.2.1.1.11.5.9.3.1	1	STARS-SSD-00989	When a TCW is in FMA mode and the magnification ratio is set greater than one, the geographic display shall[1] be distorted such that the dimension perpendicular to the approach course line of the selected AMZ is scaled to appear to use a smaller range than the same dimension parallel to the approach course lines, by the selected magnification ratio.	3.1.4	3.1.4.5 The system must [STARS-055] provide for the adaptability of the FMA display mode.
3.2.1.1.11.5.9.3.2	1	STARS-SSD-00990	When in FMA mode and when the combination of display range and magnification ratio is set such that the range setting divided by the magnification ratio is 16 nautical miles or less, reference lines shall[1] be displayed with a spacing corresponding to 200 feet starting at 200 feet from each final course line of the selected AMZ and extending to the adjacent NTZ.	3.1.4	3.1.4.5 The system must [STARS-055] provide for the adaptability of the FMA display mode.
3.2.1.1.11.5.9.3.3	1	STARS-SSD-00991	An FMA Warning alert shall[1] be indicated by an adaptable text string in the data block, with the NTZ outline and data block text appearing in the Alert color.	3.1.10	3.1.10.11 The system must [STARS-141] display aircraft information in the form of data blocks. 3.1.10.12 The system must [STARS-142] allow each site to define the content of data blocks in site adaptation. 3.1.10.28 The system must [STARS-158] generate FMA visual alerts.
3.2.1.1.11.5.9.3.3	4	STARS-SSD-00992	An FMA Surveillance alert shall[4] be indicated by an adaptable text string in the data block, in the Alert color.	3.1.4 3.1.10	3.1.4.3 The system must [STARS-053] detect unsafe proximity between a tracked aircraft and the protected airspace associated with the arrival runway when using FMA. 3.1.10.11 The system must [STARS-141] display aircraft information in the form of data blocks. 3.1.10.12 The system must [STARS-142] allow each site to define the content of data blocks in site adaptation. 3.1.10.28 The system must [STARS-158] generate FMA visual alerts.

3.2.1.1.11.5.9.3.3	6	STARS-SSD-00993	An FMA Runway alert shall[6] be indicated by an adaptable text string in the data block, in the Alert color.	3.1.4 3.1.10	3.1.4.3 The system must [STARS-053] detect unsafe proximity between a tracked aircraft and the protected airspace associated with the arrival runway when using FMA. 3.1.10.11 The system must [STARS-141] display aircraft information in the form of data blocks. 3.1.10.12 The system must [STARS-142] allow each site to define the content of data blocks in site adaptation. 3.1.10.28 The system must [STARS-158] generate FMA visual alerts.
3.2.1.1.11.5.9.3.3	8	STARS-SSD-00994	An FMA Caution alert for NTZ predicted zone violation shall[8] be indicated by an adaptable text string in the data block, with the NTZ outline and the data block text appearing in the Caution color.	3.1.4 3.1.10	3.1.4.3 The system must [STARS-053] detect unsafe proximity between a tracked aircraft and the protected airspace associated with the arrival runway when using FMA. 3.1.10.11 The system must [STARS-141] display aircraft information in the form of data blocks. 3.1.10.12 The system must [STARS-142] allow each site to define the content of data blocks in site adaptation. 3.1.10.28 The system must [STARS-158] generate FMA visual alerts.
3.2.1.1.11.5.9.3.4	1	STARS-SSD-00995	With the exception of a Warning to Caution transition, any newly-established FMA alert condition for a track shall[1] initiate a voice alert indication identifying the flight followed by the alert condition for the track.	3.1.10	3.1.10.28 The system must [STARS-158] generate FMA visual alerts. 3.1.10.29 The system must [STARS-159] generate FMA aural alerts.
3.2.1.1.11.5.9.3.4	2	STARS-SSD-00996	The flight identification portion of the voice alert indication shall[2] conform with standard phraseology as directed in FAAO 7110.65.	3.1.10	3.1.10.29 The system must [STARS-159] generate FMA aural alerts.

3.2.1.1.11.5.9.3.4	3	STARS-SSD-00997	The alert condition shall[3] be identified by adaptable (type: System-Wide) spoken text with default phrasing per the following table: Condition Default Spoken Text Warning “WARNING” Surveillance “COAST” Runway (wrong, missing or invalid runway) “WRONG RUNWAY” Caution (NTZ prediction) “CAUTION”	3.1.10	3.1.10.29 The system must [STARS-159] generate FMA aural alerts.
3.2.1.1.11.5.9.4	1	STARS-SSD-00998	A blinking symbol shall[1] be displayed at the airport’s location for an adapted time interval or until the next command if adapted as zero interval.	3.1.10	3.1.10.2 The system must [STARS-132], based upon adaptation, display general information for the facility at each TCP. 3.1.10.25 The system must [STARS-155] generate visual alerts based upon the adaptation of each individual facility.
3.2.1.1.11.5.9.4	2	STARS-SSD-00999	For the closest airport capable of handling the selected aircraft, the TCP shall[2] display the range and bearing in nmi and degrees respectively and any of the following adapted data: a. Airport ID and full names b. Unicom frequency c. Runway lighted - "L" d. Longest runway length, width or identifier e. Longest runway composition (e.g. A = asphalt, C = concrete, G = grass) f. Field Elevation g. Pilot controlled lighting available - "PL"	3.1.10	3.1.10.2 The system must [STARS-132], based upon adaptation, display general information for the facility at each TCP.
3.2.1.1.11.5.9.5	1	STARS-SSD-01000	Hospital information shall[1] display the hospital identifier, helipad equipped, lighted/unlighted status, and hospital list entry number.	3.1.10	3.1.10.2 The system must [STARS-132], based upon adaptation, display general information for the facility at each TCP.
3.2.1.1.11.5.9.6	1	STARS-SSD-01001	A range/bearing line (RBL) is defined as connecting two points, two tracks, or a point and a track and shall[1] have associated a readout of range and bearing of the second point with respect to the first.	3.1.10	3.1.10.7 The system must [STARS-137] display a target indicator at the position of each surveillance target received in single sensor mode. 3.1.10.8 The system must [STARS-138] display a target indicator at the composite position of each surveillance target received in multi-sensor and Fusion modes.

3.2.1.1.11.5.9.6	2	STARS-SSD-01002	If one endpoint is a track, the readout shall[2] display the time to travel the range at the track's current speed and removed from display upon loss of target reports.	3.1.10	3.1.10.7 The system must [STARS-137] display a target indicator at the position of each surveillance target received in single sensor mode. 3.1.10.8 The system must [STARS-138] display a target indicator at the composite position of each surveillance target received in multi-sensor and Fusion modes.
3.2.1.1.11.5.9.7	1	STARS-SSD-01003	A blinking symbol shall[1] be displayed at the selected point's location for an adapted time interval or until the next command if adapted to zero.	3.1.10	3.1.10.7 The system must [STARS-137] display a target indicator at the position of each surveillance target received in single sensor mode. 3.1.10.8 The system must [STARS-138] display a target indicator at the composite position of each surveillance target received in multi-sensor and Fusion modes.
3.2.1.1.11.5.9.7	2	STARS-SSD-01004	For the significant point, the TCP shall[2] display the range and bearing from the selected aircraft or geographic location to the significant point as well as the adapted 1 or 2 line text information.	3.1.10	3.1.10.7 The system must [STARS-137] display a target indicator at the position of each surveillance target received in single sensor mode. 3.1.10.8 The system must [STARS-138] display a target indicator at the composite position of each surveillance target received in multi-sensor and Fusion modes.
3.2.1.1.11.5.9.8	1	STARS-SSD-01005	Unless ASV Alert processing is locally disabled, an ASV Alert for an associated track shall[1] cause the TCP to display a full data block for the track and continuously blink its Mode C altitude field.	3.1.10	3.1.10.11 The system must [STARS-141] display aircraft information in the form of data blocks. 3.1.10.25 The system must [STARS-155] generate visual alerts based upon the adaptation of each individual facility.
3.2.1.1.11.5.9.8	2	STARS-SSD-01006	When an ASV Alert occurs or ceases for a track, the event shall[2] be recorded.	3.1.10 3.1.11	3.1.10.25 The system must [STARS-155] generate visual alerts based upon the adaptation of each individual facility. 3.1.11.3 The system must [STARS-173] record all data necessary to recreate system status, performance, environment, and situation displays.

3.2.1.1.11.5.10.1	1	STARS-SSD-01007	When target reports from single or multiple sensors are received, the TCW/TDW shall[1] display a single position symbol and data block for an aircraft.	3.1.2 3.1.10	3.1.2.1 The system must [STARS-011] automatically track all primary surveillance targets within a geographic area defined by SA parameters. 3.1.2.2 The system must [STARS-012] automatically track all secondary surveillance targets within a geographic area defined by SA parameters. 3.1.10.7 The system must [STARS-137] display a target indicator at the position of each surveillance target received in single sensor mode. 3.1.10.8 The system must [STARS-138] display a target indicator at the composite position of each surveillance target received in multi-sensor and Fusion modes. 3.1.10.11 The system must [STARS-141] display aircraft information in the form of data blocks.
3.2.1.1.11.5.10.2	1	STARS-SSD-01008	The TCW/TDW shall[1] locate the target ensemble on the screen based on reported surveillance data for all cases except fused track view or single sensor where reports from the selected sensor are missing and the updates are from another sensor in which case fused track data will be used.	3.1.2 3.1.10	3.1.2.1 The system must [STARS-011] automatically track all primary surveillance targets within a geographic area defined by SA parameters. 3.1.2.2 The system must [STARS-012] automatically track all secondary surveillance targets within a geographic area defined by SA parameters. 3.1.10.8 The system must [STARS-138] display a target indicator at the composite position of each surveillance target received in multi-sensor and Fusion modes.

3.2.1.1.11.5.10.3	1	STARS-SSD-01009	The TCW/TDW shall[1] display the tracked position of a target when the track has not correlated.	3.1.2 3.1.10	3.1.2.1 The system must [STARS-011] automatically track all primary surveillance targets within a geographic area defined by SA parameters. 3.1.2.2 The system must [STARS-012] automatically track all secondary surveillance targets within a geographic area defined by SA parameters. 3.1.10.7 The system must [STARS-137] display a target indicator at the position of each surveillance target received in single sensor mode. 3.1.10.8 The system must [STARS-138] display a target indicator at the composite position of each surveillance target received in multi-sensor and Fusion modes.
3.2.1.1.11.5.10.3	2	STARS-SSD-01010	In FMA mode, the TCW shall[2] display the tracked position symbol as a circle.	3.1.2 3.1.10	3.1.2.1 The system must [STARS-011] automatically track all primary surveillance targets within a geographic area defined by SA parameters. 3.1.2.2 The system must [STARS-012] automatically track all secondary surveillance targets within a geographic area defined by SA parameters. 3.1.10.7 The system must [STARS-137] display a target indicator at the position of each surveillance target received in single sensor mode. 3.1.10.8 The system must [STARS-138] display a target indicator at the composite position of each surveillance target received in multi-sensor and Fusion modes.
3.2.1.1.11.5.10.3	3	STARS-SSD-01011	In fused-track display mode, the TCW/TDW shall[3] use information from the tracker to extrapolate position to an adaptable display update time, then update the location on the screen of the target ensemble for each target.	3.1.10	3.1.10.8 The system must [STARS-138] display a target indicator at the composite position of each surveillance target received in multi-sensor and Fusion modes.

3.2.1.1.11.5.10.3	5	STARS-SSD-01012	The fused-track display mode update interval shall[5] be separately adaptable for each of the following cases: a. TCW Normal workstation FMA mode b. TCW Training workstation FMA mode c. TCW Performance Verification FMA mode d. All other TCW workstation modes e. All TDW workstation modes	3.1.4 3.1.10	3.1.4.5 The system must [STARS-055] provide for the adaptability of the FMA display mode. 3.1.10.8 The system must [STARS-138] display a target indicator at the composite position of each surveillance target received in multi-sensor and Fusion modes. 3.1.10.21 Each TCW must [STARS-151] have selectable presentation modes.
3.2.1.1.11.5.10.3	6	STARS-SSD-01013	Adaptation data for remote TCWs and TDWs shall[6] define the areas in which track data is displayed.	3.1.10	3.1.10.7 The system must [STARS-137] display a target indicator at the position of each surveillance target received in single sensor mode. 3.1.10.8 The system must [STARS-138] display a target indicator at the composite position of each surveillance target received in multi-sensor and Fusion modes.
3.2.1.1.11.5.10.4.1	1	STARS-SSD-01014	When a single character TCP symbol is adapted, only the second character, which represents the position within its subset or terminal area, shall[1] be displayed.	3.1.10	3.1.10.7 The system must [STARS-137] display a target indicator at the position of each surveillance target received in single sensor mode. 3.1.10.8 The system must [STARS-138] display a target indicator at the composite position of each surveillance target received in multi-sensor and Fusion modes.
3.2.1.1.11.5.10.4.1	2	STARS-SSD-01015	When a two character TCP symbol is adapted, the subset and position shall[2] be displayed.	3.1.10	3.1.10.7 The system must [STARS-137] display a target indicator at the position of each surveillance target received in single sensor mode. 3.1.10.8 The system must [STARS-138] display a target indicator at the composite position of each surveillance target received in multi-sensor and Fusion modes.

3.2.1.1.11.5.10.4.1	3	STARS-SSD-01016	Site adaptation shall[3] specify for each TCP the number of characters to display as the position symbol and when under specific conditions it may change.	3.1.10	3.1.10.7 The system must [STARS-137] display a target indicator at the position of each surveillance target received in single sensor mode. 3.1.10.8 The system must [STARS-138] display a target indicator at the composite position of each surveillance target received in multi-sensor and Fusion modes.
3.2.1.1.11.5.10.4.2	1	STARS-SSD-01017	When a track has established, the TCW/TDW shall[1] display a unique unassociated track symbol for primary-only tracks, and for each of the following non-primary track types: Mode C selected code, Mode C non-selected code, Non-Mode C selected code, Non-Mode C non-selected code.	3.1.10	3.1.10.7 The system must [STARS-137] display a target indicator at the position of each surveillance target received in single sensor mode. 3.1.10.8 The system must [STARS-138] display a target indicator at the composite position of each surveillance target received in multi-sensor and Fusion modes.
3.2.1.1.11.5.10.4.2	2	STARS-SSD-01018	In FMA mode, the TCW shall[2] display the unassociated target position symbol as a circle.	3.1.10	3.1.10.7 The system must [STARS-137] display a target indicator at the position of each surveillance target received in single sensor mode. 3.1.10.8 The system must [STARS-138] display a target indicator at the composite position of each surveillance target received in multi-sensor and Fusion modes.
3.2.1.1.11.5.10.4.2	3	STARS-SSD-01019	In fused display view, the TCW/TDW shall[3] display a unique unassociated track symbol for a non-established beacon track from only the current preferred sensor within the adapted surveillance/altimeter data tile for each of the following types: Mode C selected code, Mode C non-selected code, Non-Mode C selected code, Non-Mode C non-selected code.	3.1.10	3.1.10.7 The system must [STARS-137] display a target indicator at the position of each surveillance target received in single sensor mode. 3.1.10.8 The system must [STARS-138] display a target indicator at the composite position of each surveillance target received in multi-sensor and Fusion modes.
3.2.1.1.11.5.10.4.3	1	STARS-SSD-01020	The TCW/TDW shall[1] display the TCP symbol for targets that are controlled by another TCP.	3.1.10	3.1.10.7 The system must [STARS-137] display a target indicator at the position of each surveillance target received in single sensor mode. 3.1.10.8 The system must [STARS-138] display a target indicator at the composite position of each surveillance target received in multi-sensor and Fusion modes.

3.2.1.1.11.5.10.4.4	1	STARS-SSD-01021	The TCW/TDW shall[1] display the position of the following fixed targets: a. Parrots b. Permanent echoes c. Search test targets d. Beacon & search RTQC targets e. Multilateration reference transmitters	3.1.10	3.1.10.7 The system must [STARS-137] display a target indicator at the position of each surveillance target received in single sensor mode. 3.1.10.8 The system must [STARS-138] display a target indicator at the composite position of each surveillance target received in multi-sensor and Fusion modes.
3.2.1.1.11.5.10.5	1	STARS-SSD-01022	The TCW/TDW shall[1] display range and heading information from a selected aircraft to a specified fix or airport.	3.1.2 3.1.10	3.1.2.3 The system must [STARS-013] perform ground plane tracking, using target reports from both single and multisensory surveillance systems. 3.1.10.11 The system must [STARS-141] display aircraft information in the form of data blocks.
3.2.1.1.11.5.10.6	1	STARS-SSD-01023	Upon TCP selection, uncorrelated search-only targets shall[1] either be displayed everywhere or in adapted geographic polygon areas only.	3.1.10	3.1.10.7 The system must [STARS-137] display a target indicator at the position of each surveillance target received in single sensor mode.
3.2.1.1.11.5.10.8	1	STARS-SSD-01024	When a center owned track is being updated by Track Update (TU) interfacility messages only, no target symbol shall[1] be displayed.	3.1.10	3.1.10.7 The system must [STARS-137] display a target indicator at the position of each surveillance target received in single sensor mode. 3.1.10.8 The system must [STARS-138] display a target indicator at the composite position of each surveillance target received in multi-sensor and Fusion modes.
3.2.1.1.11.5.10.8	2	STARS-SSD-01025	When not in fused display view, the system shall[2] display targets reported as correlated search targets by an ASR-9 or 11 radar if enabled by adaptation.	3.1.10	3.1.10.7 The system must [STARS-137] display a target indicator at the position of each surveillance target received in single sensor mode.
3.2.1.1.11.5.11	1	STARS-SSD-01026	Upon TCP selection of a flight displaying a full data block, the adapted secondary data block shall[1] be displayed adjacent to the full data block.	3.1.10	3.1.10.11 The system must [STARS-141] display aircraft information in the form of data blocks. 3.1.10.12 The system must [STARS-142] allow each site to define the content of data blocks in site adaptation.
3.2.1.1.11.6.1	1	STARS-SSD-01027	All list and tabular data shall[1] be displayed in display coordinates.	3.1.10	3.1.10.2 The system must [STARS-132], based upon adaptation, display general information for the facility at each TCP.
3.2.1.1.11.6.2	1	STARS-SSD-01028	The TCW/TDW shall[1] uniquely indicate when a TCP is viewing or performing entries on an aircraft with a duplicate ACID or Beacon Code.	3.1.10	3.1.10.9 The system must [STARS-139] display aircraft status at each TCP.

3.2.1.1.11.6.2	2	STARS-SSD-01029	A duplicate beacon code condition shall[2] be indicated for an associated track when there is at least one other track that is reporting the same code, is within the adapted auto acquisition region, and has not been suppressed for duplicate beacon display.	3.1.2 3.1.10	3.1.2.2 The system must [STARS-012] automatically track all secondary surveillance targets within a geographic area defined by SA parameters. 3.1.10.9 The system must [STARS-139] display aircraft status at each TCP.
3.2.1.1.11.6.4	1	STARS-SSD-01030	The TCW/TDW shall[1] display an indication of the radar presentation view.	3.1.10	3.1.10.21 Each TCW must [STARS-151] have selectable presentation modes.
3.2.1.1.11.6.5.1	1	STARS-SSD-01031	The TCW/TDW shall[1] be able to simultaneously display at least sixteen adaptable data lists each of which includes any combination of data fields and a title as specified by adaptation.	3.1.10	3.1.10.2 The system must [STARS-132], based upon adaptation, display general information for the facility at each TCP.
3.2.1.1.11.6.5.1	4	STARS-SSD-01032	The TDW shall[4] display any of two adaptable data lists, each of which includes sets of any combination of data fields specified in adaptation. (STARS LITE only)	3.1.10	3.1.10.2 The system must [STARS-132], based upon adaptation, display general information for the facility at each TCP.
3.2.1.1.11.6.5.2	1	STARS-SSD-01033	Adaptation data shall[1] determine if and when to include or exclude data in specified data lists and TCW/TDW positions.	3.1.10	3.1.10.2 The system must [STARS-132], based upon adaptation, display general information for the facility at each TCP.
3.2.1.1.11.6.5.2	3	STARS-SSD-01034	Each data list shall[3] be adaptable to have or not have a property whereby visible entries for a flight remain in the list when the corresponding flight data is removed from the system.	3.1.10	3.1.10.2 The system must [STARS-132], based upon adaptation, display general information for the facility at each TCP. 3.1.10.10 The system must [STARS-140] display flight plan information at each TCP.
3.2.1.1.11.6.5.3	1	STARS-SSD-01035	Adaptation shall[1] define the ordering of data list by any field.	3.1.10	3.1.10.2 The system must [STARS-132], based upon adaptation, display general information for the facility at each TCP.
3.2.1.1.11.6.5.4	1	STARS-SSD-01036	Each TCW/TDW data list shall[1] have an adapted entry capacity that can also be set by TCP input.	3.1.9 3.1.10	3.1.9.5 The system must [STARS-115] provide a controller with the ability to manipulate the presentation of information on an individual situation display. 3.1.10.2 The system must [STARS-132], based upon adaptation, display general information for the facility at each TCP.
3.2.1.1.11.6.5.4	3	STARS-SSD-01037	An indication, based on adaptation shall[3] be displayed if the number of entries available for display exceeds the maximum entry count for that list.	3.1.10	3.1.10.2 The system must [STARS-132], based upon adaptation, display general information for the facility at each TCP.

3.2.1.1.11.6.5.5	1	STARS-SSD-01038	A numeric list line indicator shall[1] identify a flight within a list.	3.1.10	3.1.10.2 The system must [STARS-132], based upon adaptation, display general information for the facility at each TCP.
3.2.1.1.11.6.5.6.1	1	STARS-SSD-01039	The LA/CA/MCI list shall[1] include an entry for each flight that is in MSAW, MCI or CA alert state and is eligible for Alert display at the TCW/TDW.	3.1.10	3.1.10.2 The system must [STARS-132], based upon adaptation, display general information for the facility at each TCP. 3.1.10.9 The system must [STARS-139] display aircraft status at each TCP. 3.1.10.25 The system must [STARS-155] generate visual alerts based upon the adaptation of each individual facility. 3.1.10.33 The system must [STARS-163] generate MSAW visual alerts.
3.2.1.1.11.6.5.6.1	4	STARS-SSD-01040	A CA, MCI or MSAW entry in the LA/CA/MCI list shall[4] include either both associated tracks, one associated track and the beacon code of the other or the associated track and its altitude respectively as well as a “CA”, “MCI” or LA indicator.	3.1.10	3.1.10.2 The system must [STARS-132], based upon adaptation, display general information for the facility at each TCP. 3.1.10.9 The system must [STARS-139] display aircraft status at each TCP. 3.1.10.25 The system must [STARS-155] generate visual alerts based upon the adaptation of each individual facility. 3.1.10.33 The system must [STARS-163] generate MSAW visual alerts.
3.2.1.1.11.6.5.6.1	7	STARS-SSD-01041	Entries in the LA/CA/MCI list shall[7] be ordered such that the more-recent alert event is nearer the top of the list.	3.1.10	3.1.10.2 The system must [STARS-132], based upon adaptation, display general information for the facility at each TCP. 3.1.10.25 The system must [STARS-155] generate visual alerts based upon the adaptation of each individual facility. 3.1.10.33 The system must [STARS-163] generate MSAW visual alerts.

3.2.1.1.11.6.5.6.1	8	STARS-SSD-01042	The LA/CA/MCI list title shall[8] indicate which of the safety algorithms are enabled for the system.	3.1.10	3.1.10.2 The system must [STARS-132], based upon adaptation, display general information for the facility at each TCP.
3.2.1.1.11.6.5.6.1	9	STARS-SSD-01043	An indication shall[9] be displayed as the first entry of the LA/CA/MCI list when the list entry count exceeds 50 entries.	3.1.10	3.1.10.2 The system must [STARS-132], based upon adaptation, display general information for the facility at each TCP.
3.2.1.1.11.6.5.6.2	1	STARS-SSD-01044	The Sign-On list shall[1] include an entry for each user signed on at that TCW/TDW.	3.1.10	3.1.10.2 The system must [STARS-132], based upon adaptation, display general information for the facility at each TCP.
3.2.1.1.11.6.5.6.2	2	STARS-SSD-01045	A Sign-On list entry shall[2] include user name, position signed on to, time of sign-on entry, and developmental name if applicable.	3.1.10	3.1.10.2 The system must [STARS-132], based upon adaptation, display general information for the facility at each TCP.
3.2.1.1.11.6.5.6.3	1	STARS-SSD-01046	The Hospital list shall[1] display adapted hospitals that are associated to the same Terminal Sector(s) as any of the logical TCPs at the TCW/TDW.	3.1.10	3.1.10.2 The system must [STARS-132], based upon adaptation, display general information for the facility at each TCP.
3.2.1.1.11.6.5.6.3	2	STARS-SSD-01047	The width of the hospital name column shall[2] be sized to accommodate the longest adapted hospital name with one space to separate for the next column.	3.1.10	3.1.10.2 The system must [STARS-132], based upon adaptation, display general information for the facility at each TCP.
3.2.1.1.11.6.5.6.4	1	STARS-SSD-01048	Each CA Zone Suppression list entry shall[1] identify the zone by name and indicate the zone status with respect to CA processing.	3.1.3 3.1.10	3.1.3.2 The system must [STARS-032] en¬able and disable CA processing for pairs of aircraft based upon pre-defined adaptation parameters. 3.1.3.3 The system must [STARS-033] en¬able and disable CA processing for pairs of aircraft via manual entry. 3.1.3.4 The system must [STARS-034] enable and disable CA processing for the entire facility from a single keyboard entry. 3.1.10.2 The system must [STARS-132], based upon adaptation, display general information for the facility at each TCP.
3.2.1.1.11.6.5.6.4	2	STARS-SSD-01049	The CA Zone Suppression list title line shall[2] display the airport designator name.	3.1.10	3.1.10.2 The system must [STARS-132], based upon adaptation, display general information for the facility at each TCP.

3.2.1.1.11.6.5.6.5	1	STARS-SSD-01050	The CRDA status list includes an entry for each application adapted for the terminal area of the displaying TCW/TDW, where each entry shall[1] contain an indication of CRDA applications currently enabled and their mode, the identity; airport and involved runways for the application, and a list of the TCPs with the application enabled.	3.1.5 3.1.10	3.1.5.3 The system must [STARS-063] enable and disable CRDA for each TCP via manual entry. 3.1.10.2 The system must [STARS-132], based upon adaptation, display general information for the facility at each TCP.
3.2.1.1.11.6.5.6.6	1	STARS-SSD-01051	Each TCW/TDW shall[1] display up to four workstation notes in separate display areas, with each containing up to 32 characters per line.	3.1.10	3.1.10.2 The system must [STARS-132], based upon adaptation, display general information for the facility at each TCP.
3.2.1.1.11.6.5.6.6	2	STARS-SSD-01052	Each TCW/TDW shall[2] provide an area to display up to 20 text messages of up to 32 characters per message.	3.1.10	3.1.10.2 The system must [STARS-132], based upon adaptation, display general information for the facility at each TCP.
3.2.1.1.11.6.5.6.6	3	STARS-SSD-01053	The list of received text messages shall[3] be displayed upon receipt of a text message for any TCP assigned to that TCW/TDW or upon sign-on to that position.	3.1.10	3.1.10.2 The system must [STARS-132], based upon adaptation, display general information for the facility at each TCP.
3.2.1.1.11.6.5.6.6	4	STARS-SSD-01054	Creation, modification or deletion of a text message shall[4] be precluded for a period of time following any change by another keyboard to the list of text messages.	3.1.9	3.1.9.8 The system must [STARS-118] perform error checking on all input messages.
3.2.1.1.11.6.5.6.7	1	STARS-SSD-01055	The Military Operations Area (MOA) status list shall[1] include an adapted title, a line for each adapted MOA segment and an entry showing the ACID of the assigned flight for each MOA segment and level.	3.1.10	3.1.10.2 The system must [STARS-132], based upon adaptation, display general information for the facility at each TCP.
3.2.1.1.11.6.5.6.7	5	STARS-SSD-01056	MOA assignment data entered for a flight shall[5] be displayed in the scratch pad field, exempt the flight from automatic handoff processing and determine assignment of one or two of the up to 10 possible, MOA segments and in one or two levels (”H” or “L”).	3.1.9 3.1.10	3.1.9.4 The system must [STARS-114] provide the controller with control over flight plan information. 3.1.9.5 The system must [STARS-115] provide a controller with the ability to manipulate the pre-sentation of information on an individual situation display. 3.1.10.11 The system must [STARS-141] display aircraft information in the form of data blocks.
3.2.1.1.11.6.5.6.7	7	STARS-SSD-01057	Assignment removal of a flight from a MOA shall[7] occur upon entry of a command beginning with the MOA assignment character and having null MOA assignment data or MOA assignment data not corresponding to any MOA segment.	3.1.9	3.1.9.4 The system must [STARS-114] provide the controller with control over flight plan information.

3.2.1.1.11.6.5.6.7	8	STARS-SSD-01058	Upon an attempted MOA assignment that fails a warning shall[8] be displayed in the list with a flashing ACID that will remain in that condition until such time as the assignment is corrected or removed.	3.1.10	3.1.10.25 The system must [STARS-155] generate visual alerts based upon the adaptation of each individual facility.
3.2.1.1.11.6.5.6.8	1	STARS-SSD-01059	The Time Out Warning list shall[1] display an adapted title and those non-active flight plans that are departures for the airport adapted to the list and are within 10 minutes of a user-selected number of minutes past their proposed departure time, unless designated for exclusion by manual entry.	3.1.7 3.1.9 3.1.10	3.1.7.2 The system must [STARS-082] process Arrival, Departure, and Overflight Flight Plans generated internally by an adjacent Terminal facility. 3.1.7.3 The system must [STARS-083] process Arrival, Departure, and Overflight Flight Plans generated internally by an ARTCC. 3.1.9.5 The system must [STARS-115] provide a controller with the ability to manipulate the pre-sentation of information on an individual situation display. 3.1.10.2 The system must [STARS-132], based upon adaptation, display general information for the facility at each TCP.
3.2.1.1.11.6.5.6.9	1	STARS-SSD-01060	The MASZ List display shall[1] include the Zone Identifier and the suppressed alert type for each adapted and enabled zone.	3.1.10	3.1.10.2 The system must [STARS-132], based upon adaptation, display general information for the facility at each TCP. 3.1.10.25 The system must [STARS-155] generate visual alerts based upon the adaptation of each individual facility.
3.2.1.1.11.6.5.6.10	1	STARS-SSD-01061	The Restriction Area List shall[1] include the number and identifier for each current restriction area.	3.1.10	3.1.10.2 The system must [STARS-132], based upon adaptation, display general information for the facility at each TCP.
3.2.1.1.11.6.5.6.11	1	STARS-SSD-01062	The altimeter list shall[1] accommodate up to 40 altimeter reporting stations, one per row, in the same order as adapted.	3.1.2 3.1.10	3.1.2.6 The system must [STARS-016] provide for automatic entry of Altimeter data for the calculation of aircraft altitude information. 3.1.10.2 The system must [STARS-132], based upon adaptation, display general information for the facility at each TCP.

3.2.1.1.11.6.5.6.11	2	STARS-SSD-01063	Each row in the altimeter list shall[2] include the following information in the listed order from left to right: a. Three character altimeter reporting station identifier followed by a space b. Current altimeter setting in either Inches of Hg or miliBars, based on adaptation c. Code indicating altimeter status as follows: 1. "A" if method is Automatic and a valid report is available 2. "M" if method is Automatic and successive updates have been missing for an adapted time interval 3. " " (blank) if method is known and TCP entered 4. "E" if method is Estimated	3.1.2 3.1.10	3.1.2.6 The system must [STARS-016] provide for automatic entry of Altimeter data for the calculation of aircraft altitude information. 3.1.2.7 The system must [STARS-017] provide for manual override entry of Altimeter data for the calculation of aircraft altitude information. 3.1.10.2 The system must [STARS-132], based upon adaptation, display general information for the facility at each TCP.
3.2.1.1.11.6.5.6.11	3	STARS-SSD-01064	Any row in the altimeter list shall[3] be displayed blinking in the unacknowledged Caution color, if the altimeter setting method is Automatic and consecutive updates are missing for more than an adaptable threshold.	3.1.2 3.1.10	3.1.2.6 The system must [STARS-016] provide for automatic entry of Altimeter data for the calculation of aircraft altitude information. 3.1.10.2 The system must [STARS-132], based upon adaptation, display general information for the facility at each TCP. 3.1.10.25 The system must [STARS-155] generate visual alerts based upon the adaptation of each individual facility.
3.2.1.1.11.6.5.6.11	4	STARS-SSD-01065	If an altimeter list has been inhibited from display at a TCW/TDW and a reporting station in the list has an altimeter setting method of Automatic and experiences any missing reports, the list shall[4] be displayed at its previous or default location.	3.1.2 3.1.10	3.1.2.6 The system must [STARS-016] provide for automatic entry of Altimeter data for the calculation of aircraft altitude information. 3.1.10.2 The system must [STARS-132], based upon adaptation, display general information for the facility at each TCP.
3.2.1.1.11.6.5.6.12	1	STARS-SSD-01066	The ADS-B Radio Station list shall[1] display an adapted title and the adapted radio stations, including the name and abbreviated name in each row.	3.1.1 3.1.10	3.1.1.5 The system must [STARS-005] process ADS-B from the Surveillance Broadcast System (SBS). 3.1.10.2 The system must [STARS-132], based upon adaptation, display general information for the facility at each TCP.

3.2.1.1.11.6.5.6.12	3	STARS-SSD-01067	The ADS-B Radio Station list shall[3] display failed and offline radio stations in the adapted non-blinking alert color, followed by online radio stations in the adapted Lists color.	3.1.1 3.1.10	3.1.1.5 The system must [STARS-005] process ADS-B from the Surveillance Broadcast System (SBS). 3.1.10.2 The system must [STARS-132], based upon adaptation, display general information for the facility at each TCP. 3.1.10.25 The system must [STARS-155] generate visual alerts based upon the adaptation of each individual facility.
3.2.1.1.11.6.5.6.12	4	STARS-SSD-01068	When in a training exercise, the ADS-B Radio Station list shall[4] indicate the radio station statuses as supplied by the simulation system.	3.1.1 3.1.10	3.1.1.5 The system must [STARS-005] process ADS-B from the Surveillance Broadcast System (SBS). 3.1.10.2 The system must [STARS-132], based upon adaptation, display general information for the facility at each TCP.
3.2.1.1.11.6.5.6.13	1	STARS-SSD-01069	The TSAS Status list shall[1] display the enabled/disabled state of TSAS tools for TCPs adapted for the requesting TCP.	3.1.10	3.1.10.2 The system must [STARS-132], based upon adaptation, display general information for the facility at each TCP.
3.2.1.1.11.6.5.6.14	1	STARS-SSD-01070	The TCW/TDW shall[1] display a list of code/callsign pairs for which the callsign is not displayed in an LDB while in DSA or DSF modes.	3.1.10	3.1.10.2 The system must [STARS-132], based upon adaptation, display general information for the facility at each TCP. 3.1.10.11 The system must [STARS-141] display aircraft information in the form of data blocks.
3.2.1.1.11.6.6	1	STARS-SSD-01071	A preview area on the TCW/TDW for each input device shall[1] display the content of any input data entry prior to submission of the entry and consist of up to 10 lines each containing up to 32 characters.	3.1.10	3.1.10.4 The system must [STARS-134] provide a message composition area at the TCPs.
3.2.1.1.11.6.6.2	1	STARS-SSD-01072	TCP input shall[1] have the capability to edit data that is displayed in the preview area prior to submission of the entry for processing.	3.1.9 3.1.10	3.1.9.6 The system must [STARS-116] allow for the control of global system information. 3.1.10.4 The system must [STARS-134] provide a message composition area at the TCPs.

3.2.1.1.11.6.6.3	1	STARS-SSD-01073	When an entry error occurs, the TCW/TDW shall[1] display the error in the preview area and allow the entry to be edited and resubmitted.	3.1.9 3.1.10	3.1.9.6 The system must [STARS-116] allow for the control of global system information. 3.1.9.8 The system must [STARS-118] perform error checking on all input messages. 3.1.10.4 The system must [STARS-134] provide a message composition area at the TCPs. 3.1.10.6 The system must [STARS-136] display data entry error messages at each TCP.
3.2.1.1.11.6.8	1	STARS-SSD-01074	An area of up to 3 lines on the TCW/TDW for each input device shall[1] display response or error messages for each input data entry.	3.1.9	3.1.9.8 The system must [STARS-118] perform error checking on all input messages. 3.1.10.5 The system must [STARS-135] provide a message response area at each TCP. 3.1.10.6 The system must [STARS-136] display data entry error messages at each TCP.
3.2.1.1.11.6.8	3	STARS-SSD-01075	When displaying flight data for a single flight in the readout area, the selection and ordering of display data items shall[3] be established by adaptation.	3.1.10	3.1.10.2 The system must [STARS-132], based upon adaptation, display general information for the facility at each TCP.
3.2.1.1.11.6.9	1	STARS-SSD-01076	An area on the TCW/TDW shall[1] display TCP preference setting information for each TCP.	3.1.10	3.1.10.2 The system must [STARS-132], based upon adaptation, display general information for the facility at each TCP.
3.2.1.1.11.6.10	1	STARS-SSD-01077	The system data area shall[1] display the following: a. Time b. Safety alert inhibits c. ATIS data d. TCP Consolidation status e. System errors that affect operational capabilities at the TCW/TDW f. Selected Beacon Codes g. Altitude filter limits h. CRDA application enabled i. PAM display view selected	3.1.10	3.1.10.2 The system must [STARS-132], based upon adaptation, display general information for the facility at each TCP. 3.1.10.3 The system must [STARS-133] based upon adaptation, display the general status of the system at each TCP.
3.2.1.1.11.6.10.1	1	STARS-SSD-01078	The system data area shall[1] be displayed at the TCW/TDW except when no data is available.	3.1.10	3.1.10.2 The system must [STARS-132], based upon adaptation, display general information for the facility at each TCP.

3.2.1.1.11.6.10.2	1	STARS-SSD-01079	The system data area shall[1] be displayed at any selected location on the TCW/TDW.	3.1.10	3.1.9.5 The system must [STARS-115] provide a controller with the ability to manipulate the presentation of information on an individual situation display. 3.1.10.2 The system must [STARS-132], based upon adaptation, display general information for the facility at each TCP.
3.2.1.1.11.6.10.3	2	STARS-SSD-01080	Only system data lines that contain at least one selected field shall[2] be displayed.	3.1.10	3.1.10.2 The system must [STARS-132], based upon adaptation, display general information for the facility at each TCP.
3.2.1.1.11.6.10.3	3	STARS-SSD-01081	Operator commands shall[3] select and remove all non-mandatory fields in the system data area.	3.1.9 3.1.10	3.1.9.5 The system must [STARS-115] provide a controller with the ability to manipulate the presentation of information on an individual situation display. 3.1.10.2 The system must [STARS-132], based upon adaptation, display general information for the facility at each TCP.
3.2.1.1.11.6.10.4.1	1	STARS-SSD-01082	The system data area shall[1] display the status of: a. system wide ATC operational functions, b. current service level if applicable, and c. available service levels if applicable.	3.1.10	3.1.10.3 The system must [STARS-133] based upon adaptation, display the general status of the system at each TCP.
3.2.1.1.11.6.10.4.1	2	STARS-SSD-01083	Enabling or disabling of the recording of CDR data shall[2] be indicated in the system data area if adapted to be displayed for the TCW/TDW.	3.1.10	3.1.10.3 The system must [STARS-133] based upon adaptation, display the general status of the system at each TCP.
3.2.1.1.11.6.10.4.2	1	STARS-SSD-01084	The system data area shall[1] display the status of operational functions that have been selected and inhibited at the TCW/TDW or TCP level.	3.1.10	3.1.10.3 The system must [STARS-133] based upon adaptation, display the general status of the system at each TCP.
3.2.1.1.11.6.10.4.2	2	STARS-SSD-01085	TCW/TDW failure detection shall[2] be indicated at the affected TCW/TDW with a banner notification of fixed location and size of at least 3/8 inch in height and 4 inches in width.	3.1.10	3.1.10.3 The system must [STARS-133] based upon adaptation, display the general status of the system at each TCP.
3.2.1.1.11.6.10.4.2	3	STARS-SSD-01086	Upon detection of a critical failure, the TCW/TDW display shall[3] be frozen and display an informational message to the operator.	3.1.10	3.1.10.3 The system must [STARS-133] based upon adaptation, display the general status of the system at each TCP.
3.2.1.1.11.6.10.4.2	4	STARS-SSD-01087	In the absence of a failure, when the FSL service level is unavailable, a TCW/TDW in Normal or Training mode shall[4] display a warning banner.	3.1.10	3.1.10.3 The system must [STARS-133] based upon adaptation, display the general status of the system at each TCP.

3.2.1.1.11.6.10.4.2	5	STARS-SSD-01088	The system data area shall[5] display a single Red Check symbol consisting of a solid red inverted delta centered within a green outline box.	3.1.10	3.1.10.2 The system must [STARS-132], based upon adaptation, display general information for the facility at each TCP. 3.1.10.3 The system must [STARS-133] based upon adaptation, display the general status of the system at each TCP.
3.2.1.1.11.6.10.5	1	STARS-SSD-01089	The system data area shall[1] display the primary and up to 9 unique auxiliary general information strings and their optional associated ATIS character.	3.1.10	3.1.10.2 The system must [STARS-132], based upon adaptation, display general information for the facility at each TCP.
3.2.1.1.11.6.10.5	3	STARS-SSD-01090	When a displayed unique auxiliary general information string and ATIS character are empty, the line label shall[3] be displayed in system data.	3.1.10	3.1.10.2 The system must [STARS-132], based upon adaptation, display general information for the facility at each TCP.
3.2.1.1.11.6.10.5	4	STARS-SSD-01091	Upon change to a displayed general information string, the system data area shall[4] blink the string based on adaptation.	3.1.10	3.1.10.2 The system must [STARS-132], based upon adaptation, display general information for the facility at each TCP.
3.2.1.1.11.6.10.6	1	STARS-SSD-01092	The system data area shall[1] indicate any TCPs that have been selected for quicklook or quicklook plus.	3.1.10	3.1.10.3 The system must [STARS-133] based upon adaptation, display the general status of the system at each TCP.
3.2.1.1.11.6.10.6	2	STARS-SSD-01093	When a TCW/TDW is adapted to allow quicklook to follow consolidation, then the newly consolidated TCP shall[2] be added to the list of TCPs selected for quicklook or quicklook plus if not already selected or does not have all TCP's selected for quicklook.	3.1.10	3.1.10.3 The system must [STARS-133] based upon adaptation, display the general status of the system at each TCP.
3.2.1.1.11.6.10.7	1	STARS-SSD-01094	In single sensor presentation mode, the system data area shall[1] indicate the source sensor providing information for that TCW/TDW.	3.1.10	3.1.10.2 The system must [STARS-132], based upon adaptation, display general information for the facility at each TCP. 3.1.10.21 Each TCW must [STARS-151] have selectable presentation modes.
3.2.1.1.11.6.10.8	1	STARS-SSD-01095	The system data area shall[1] display the currently selected configuration plan for primary TCP at the TCW/TDW.	3.1.10	3.1.10.2 The system must [STARS-132], based upon adaptation, display general information for the facility at each TCP.
3.2.1.1.11.6.10.10	1	STARS-SSD-01096	The system data area of a TCW/TDW shall[1] accommodate up to 6 altimeter reporting station fields, 3 per row.	3.1.10	3.1.2.6 The system must [STARS-016] provide for automatic entry of Altimeter data for the calculation of aircraft altitude information. 3.1.10.2 The system must [STARS-132], based upon adaptation, display general information for the facility at each TCP.

3.2.1.1.11.6.10.10	2	STARS-SSD-01097	Each altimeter reporting station field shall[2] include the following information in the listed order from left to right: a. Three character ID b. Current setting c. Status code	3.1.10	3.1.2.6 The system must [STARS-016] provide for automatic entry of Altimeter data for the calculation of aircraft altitude information. 3.1.10.2 The system must [STARS-132], based upon adaptation, display general information for the facility at each TCP. 3.1.10.3 The system must [STARS-133] based upon adaptation, display the general status of the system at each TCP.
3.2.1.1.11.6.10.10	3	STARS-SSD-01098	Any altimeter reporting station field shall[3] be displayed blinking in the unacknowledged Caution color if the altimeter setting method is Automatic and consecutive updates are missing for more than an adaptable threshold.	3.1.2 3.1.10	3.1.2.6 The system must [STARS-016] provide for automatic entry of Altimeter data for the calculation of aircraft altitude information. 3.1.10.2 The system must [STARS-132], based upon adaptation, display general information for the facility at each TCP.
3.2.1.1.11.6.10.10	4	STARS-SSD-01099	When an altimeter reporting station has been adapted for but inhibited from display, has an altimeter status of Automatic, and experiences the missing data condition described in shall[3], the reporting station(s) shall[4] be displayed at their previous location(s) within the system data area.	3.1.10	3.1.2.6 The system must [STARS-016] provide for automatic entry of Altimeter data for the calculation of aircraft altitude information. 3.1.10.2 The system must [STARS-132], based upon adaptation, display general information for the facility at each TCP.
3.2.1.1.11.6.10.17	1	STARS-SSD-01100	The system data area shall[1] display transponder indicators.	3.1.10	3.1.10.2 The system must [STARS-132], based upon adaptation, display general information for the facility at each TCP.
3.2.1.1.11.6.10.17	2	STARS-SSD-01101	The Alert SPC indicators shall[2] be displayed non-blinking in the system status area in the Alert color.	3.1.10	3.1.10.25 The system must [STARS-155] generate visual alerts based upon the adaptation of each individual facility.
3.2.1.1.11.6.10.17	3	STARS-SSD-01102	The characters, MI, and any of the other adapted codes shall[3] be displayed non-blinking in the system status area in the Caution color.	3.1.10	3.1.10.25 The system must [STARS-155] generate visual alerts based upon the adaptation of each individual facility.
3.2.1.1.11.6.10.18	1	STARS-SSD-01103	When an IFDT interface is adapted for a site, the system data area shall[1] display an indication upon experiencing a failure.	3.1.10	3.1.10.3 The system must [STARS-133] based upon adaptation, display the general status of the system at each TCP.

3.2.1.1.11.6.10.19	1	STARS-SSD-01104	The system data area shall[1] uniquely indicate that surveillance system search test targets are being received and displayed.	3.1.1 3.1.10	3.1.1.2 The system must [STARS-002] process digital primary inputs from the FAA and DoD air traffic surveillance systems, if available. 3.1.10.2 The system must [STARS-132], based upon adaptation, display general information for the facility at each TCP.
3.2.1.1.11.6.10.20	1	STARS-SSD-01105	The system data area shall[1] display the following display settings: a. Range b. predicted track line interval, and c. weather history indicator	3.1.10	3.1.10.2 The system must [STARS-132], based upon adaptation, display general information for the facility at each TCP.
3.2.1.1.11.6.10.21	1	STARS-SSD-01106	The system data area shall[1] display weather levels indicating which of them are selected for display and which have available weather data.	3.1.10	3.1.10.16 The system must [STARS-146] display weather data. 3.1.10.17 The system must [STARS-147] allow weather intensity to be selectable at the TCP for the 6 available processed weather levels.
3.2.1.1.11.6.10.22	1	STARS-SSD-01107	In FMA mode with an ASR-9 selected for display, the TCW system data area shall[1] display ASR-9 status as blinking in the adapted caution color when Mode-S fails and IBI mode is active.	3.1.10	3.1.10.2 The system must [STARS-132], based upon adaptation, display general information for the facility at each TCP. 3.1.10.21 Each TCW must [STARS-151] have selectable presentation modes. 3.1.10.28 The system must [STARS-158] generate FMA visual alerts.
3.2.1.1.11.6.10.22	2	STARS-SSD-01108	TCP input shall[2] terminate blinking of system data.	3.1.9	3.1.9.5 The system must [STARS-115] provide a controller with the ability to manipulate the presentation of information on an individual situation display.

3.2.1.1.11.6.10.22	3	STARS-SSD-01109	The system data area shall[3] display the ASR-9 Mode status only under all of the following conditions: a. Single sensor view is selected b. An ASR-9 Mode S radar is selected for display c. Display of ASR-9 Mode status is enabled by adaptation.	3.1.1 3.1.10	3.1.1.2 The system must [STARS-002] process digital primary inputs from the FAA and DoD air traffic surveillance systems, if available. 3.1.1.3 The system must [STARS-003] process secondary inputs from the FAA and DoD air traffic surveillance systems. 3.1.10.3 The system must [STARS-133] based upon adaptation, display the general status of the system at each TCP.
3.2.1.1.11.6.10.22	4	STARS-SSD-01110	When an adapted Coverage Zone (CZ) for a multilateration sensor has been communicated to have failed, in normal operations or by the simulator in training mode, the TCW system data area shall[4] indicate the failure by appending to the AMZ line, the CZ name displayed non-blinking in the adapted alert color and display a banner notification of at least 3/8 inch in height and 4 inches in width.	3.1.10	3.1.10.3 The system must [STARS-133] based upon adaptation, display the general status of the system at each TCP. 3.1.10.25 The system must [STARS-155] generate visual alerts based upon the adaptation of each individual facility.
3.2.1.1.11.6.10.23	1	STARS-SSD-01111	The contents of each system data field other than Weather Level Status shall[1] be left-justified, using single spaces to separate data.	3.1.10	3.1.10.2 The system must [STARS-132], based upon adaptation, display general information for the facility at each TCP.
3.2.1.1.11.6.10.27	1	STARS-SSD-01112	The system data area shall[1] indicate when a sensor is in a failed or off-line state by displaying the sensor name non-blinking in the adapted alert color.	3.1.10	3.1.10.3 The system must [STARS-133] based upon adaptation, display the general status of the system at each TCP. 3.1.10.25 The system must [STARS-155] generate visual alerts based upon the adaptation of each individual facility.
3.2.1.1.11.6.10.27	2	STARS-SSD-01113	In FMA mode, with a multilateration sensor selected, and the entire multilateration sensor has failed, or the sensor is in the off-line state, a banner notification of at least 3/8 inch in height and 4 inches in width shall[2] be displayed.	3.1.10	3.1.10.28 The system must [STARS-158] generate FMA visual alerts.
3.2.1.1.11.6.10.27	3	STARS-SSD-01114	The system data area shall[3] display the abbreviated names of up to three ADS-B radio stations that are failed or offline, in the alert color unless the ADS-B sensor is failed/offline or inhibited by adaptation.	3.1.10	3.1.10.3 The system must [STARS-133] based upon adaptation, display the general status of the system at each TCP. 3.1.10.25 The system must [STARS-155] generate visual alerts based upon the adaptation of each individual facility.

3.2.1.1.11.6.10.27	6	STARS-SSD-01115	When in a training exercise, the system data area shall[6] indicate the sensor or ADS-B radio stations statuses as supplied by the simulation system.	3.1.10	3.1.10.3 The system must [STARS-133] based upon adaptation, display the general status of the system at each TCP.
3.2.1.1.11.6.10.27	8	STARS-SSD-01116	When a TCW/TDW is adapted to display a sensor fail banner, and a sensor fail occurs, then a banner notification shall[8] be displayed of at least 3/8 inch in height and 4 inches in width, until acknowledged by TCP input at which time it will be removed.	3.1.9 3.1.10	3.1.9.5 The system must [STARS-115] provide a controller with the ability to manipulate the presentation of information on an individual situation display. 3.1.10.25 The system must [STARS-155] generate visual alerts based upon the adaptation of each individual facility.
3.2.1.1.11.6.10.28	1	STARS-SSD-01117	The system data shall[1] display either TCW/TDW inhibit or site-wide inhibit of the ADS-B / non-ADS-B indicators.	3.1.10	3.1.10.3 The system must [STARS-133] based upon adaptation, display the general status of the system at each TCP.
3.2.1.1.11.6.10.29	1	STARS-SSD-01118	The system data area shall[1] indicate at all displays in the current exercise when ATPA is disabled system-wide.	3.1.10	3.1.10.3 The system must [STARS-133] based upon adaptation, display the general status of the system at each TCP.
3.2.1.1.11.6.10.29	2	STARS-SSD-01119	Each position that is adapted with an ATPA Approach Volume or has a position consolidated to it that is adapted for the volume, the system data area shall[2] indicate the ATPA Approach Volumes that have been disabled by TCP input or enabled for 2.5 nmi Reduced Separation.	3.1.9 3.1.10	3.1.9.6 The system must [STARS-116] allow for the control of global system information. 3.1.10.3 The system must [STARS-133] based upon adaptation, display the general status of the system at each TCP.
3.2.1.1.11.6.10.30	1	STARS-SSD-01120	The system data shall[1] indicate when the adapted TBFM interface is in a failed or off-line state.	3.1.10	3.1.10.3 The system must [STARS-133] based upon adaptation, display the general status of the system at each TCP.
3.2.1.1.11.6.10.31	1	STARS-SSD-01121	The system data shall[1] display runways with closed status at TCW/TDW positions related to the airport.	3.1.10	3.1.10.3 The system must [STARS-133] based upon adaptation, display the general status of the system at each TCP.
3.2.1.1.11.6.11.1	1	STARS-SSD-01122	The TCW/TDW shall[1] display coordination messages as ordered, coordination information with a notation to indicate when a message acknowledgment is required and adapted to display coordination information grouped per airport.	3.1.10	3.1.10.2 The system must [STARS-132], based upon adaptation, display general information for the facility at each TCP.
3.2.1.1.11.6.11.1	2	STARS-SSD-01123	Coordination message acknowledgment shall[2] be indicated as required if a flight appearing in a coordination information display changes ownership because of a configuration change and if adaptation calls for the coordination message to react to such change.	3.1.9 3.1.10	3.1.9.6 The system must [STARS-116] allow for the control of global system information. 3.1.10.10 The system must [STARS-140] display flight plan information at each TCP.

3.2.1.1.11.6.11.4	1	STARS-SSD-01124	The TCW/TDWs of adapted TCPs sending and receiving coordination messages shall[1] display coordination information.	3.1.10	3.1.10.2 The system must [STARS-132], based upon adaptation, display general information for the facility at each TCP.
3.2.1.1.11.6.11.4	2	STARS-SSD-01125	Flight data displayed in a coordination message information display shall[2] be removed when the flight becomes associated with an active track.	3.1.10	3.1.10.4 The system must [STARS-134] provide a message composition area at the TCPs. 3.1.10.10 The system must [STARS-140] display flight plan information at each TCP.
3.2.1.1.11.6.11.4	3	STARS-SSD-01126	A data field shall[3] indicate the amount of time before the coordination message acknowledgement will expire.	3.1.10	3.1.10.3 The system must [STARS-133] based upon adaptation, display the general status of the system at each TCP.
3.2.1.1.11.6.11.4	4	STARS-SSD-01127	The coordination list entry shall[4] indicate a warning condition an adapted time period before reverting to the unacknowledged state.	3.1.10	3.1.10.3 The system must [STARS-133] based upon adaptation, display the general status of the system at each TCP.
3.2.1.1.11.6.11.5	1	STARS-SSD-01128	The TCW/TDW shall[1] display a notation to indicate coordination data that has not been sent to the associated, adapted TCP.	3.1.10	3.1.10.3 The system must [STARS-133] based upon adaptation, display the general status of the system at each TCP.
3.2.1.1.11.6.12	1	STARS-SSD-01129	The TCW/TDW shall[1] indicate when a duplicate Target Address is detected.	3.1.1 3.1.10	3.1.1.3 The system must [STARS-003] process secondary inputs from the FAA and DoD air traffic surveillance systems. 3.1.10.9 The system must [STARS-139] display aircraft status at each TCP.
3.2.1.1.11.6.13	1	STARS-SSD-01130	The Extrinsic Message Area on the TCW/TDW, when enabled, shall[1] display messages regarding the failure of commands issued to the TBFM system from that input device or informational messages received from the TBFM system.	3.1.10	3.1.10.3 The system must [STARS-133] based upon adaptation, display the general status of the system at each TCP.
3.2.1.1.11.6.13	2	STARS-SSD-01131	The Extrinsic Message Area shall[2] be cleared upon any of the following: a. A new command is issued to the TBFM system b. The CLEAR key is selected c. An adapted duration following the last update.	3.1.9	3.1.9.5 The system must [STARS-115] provide a controller with the ability to manipulate the presentation of information on an individual situation display.

3.2.1.1.12.1	1	STARS-SSD-01132	The status of the following resources shall[1] be continually monitored: a. FSL serial interface hardware b. FSL subsystem computers c. Support subsystem computers d. FSL subsystem main network e. Support Subsystem network f. GPS Time Source g. Surveillance systems h. TFMS interface i. IFDT interface j. FSL software components k. RAID Storage Device	3.1.11	3.1.11.3 The system must [STARS-173] record all data necessary to recreate system status, performance, environment, and situation displays.
3.2.1.1.12.1	2	STARS-SSD-01133	The status of the following resources shall[2] be continually monitored by FSL: a. AIG communication router b. ABPE terminal server c. Logical ABPE interfaces d. Logical TBFM interface	3.1.11	3.1.11.3 The system must [STARS-173] record all data necessary to recreate system status, performance, environment, and situation displays.
3.2.1.1.12.1	3	STARS-SSD-01134	The status of the following resources shall[3] be continually monitored by FSL (STARS LITE only): a. FSL serial interface hardware b. FSL subsystem computer c. Radar external interfaces d. FSL software e. IFDT external interface f. CDR drives g. GPS Time Source	3.1.11	3.1.11.3 The system must [STARS-173] record all data necessary to recreate system status, performance, environment, and situation displays.
3.2.1.1.12.2	1	STARS-SSD-01135	Resource status monitored by FSL and any failures detected shall[1] be performed automatically.	3.1.11	3.1.11.3 The system must [STARS-173] record all data necessary to recreate system status, performance, environment, and situation displays.
3.2.1.1.12.5	1	STARS-SSD-01136	In the event of MCP failure, the rest of the service level shall[1] continue operating autonomously, providing ATC Operational functionality and a visual indication may be displayed on an associated workstation.	3.3.2	3.3.2.1 The system design must [STARS-321] preclude single point failures, excluding TCWs, MCWs, and TDWs.
3.2.1.1.12.7	2	STARS-SSD-01137	Critical failure of a software component shall[2] result in automatic warm-start of the computer. (STARS LITE only)	3.2.2	3.2.2.3 The system must [STARS-223] recover from power failure to the same operational state as before the failure.

3.2.1.1.12.8	1	STARS-SSD-01138	A graphic view of the resources monitored by FSL shall[1] be displayed at the FSL MCP.	3.1.10	3.1.10.3 The system must [STARS-133] based upon adaptation, display the general status of the system at each TCP.
3.2.1.1.12.9	1	STARS-SSD-01139	The list of the selectable FSL MCP functions and the associated enable/disable selection shall[1] be displayed.	3.1.10	3.1.10.3 The system must [STARS-133] based upon adaptation, display the general status of the system at each TCP.
3.2.1.1.12.10	2	STARS-SSD-01140	The external system interface error rate shall[2] be calculated and compared with an adaptable threshold for the following external interfaces to determine failure: a. Radar b. IFDT c. TFMS	3.1.1	3.1.1.2 The system must [STARS-002] process digital primary inputs from the FAA and DoD air traffic surveillance systems, if available. 3.1.1.3 The system must [STARS-003] process secondary inputs from the FAA and DoD air traffic surveillance systems.
3.2.1.1.12.10	5	STARS-SSD-01141	An adaptable parameter shall[5] determine whether manual acknowledgement at the MCP is required for interface fault conditions that have subsequently cleared.	3.1.9	3.1.9.8 The system must [STARS-118] perform error checking on all input messages.
3.2.1.1.12.11.1	1	STARS-SSD-01142	Errors detected in the data received from each radar shall[1] be used to calculate the error rate, compare to an adaptable threshold and displayed for each radar.	3.1.1	3.1.1.2 The system must [STARS-002] process digital primary inputs from the FAA and DoD air traffic surveillance systems, if available. 3.1.1.3 The system must [STARS-003] process secondary inputs from the FAA and DoD air traffic surveillance systems.
3.2.1.1.12.11.4	1	STARS-SSD-01143	Current and calculated registration correction factors shall[1] be displayed and indicate, with an alert, those values exceeding a threshold.	3.1.1 3.1.10	3.1.1.2 The system must [STARS-002] process digital primary inputs from the FAA and DoD air traffic surveillance systems, if available. 3.1.1.3 The system must [STARS-003] process secondary inputs from the FAA and DoD air traffic surveillance systems. 3.1.10.3 The system must [STARS-133] based upon adaptation, display the general status of the system at each TCP. 3.1.10.25 The system must [STARS-155] generate visual alerts based upon the adaptation of each individual facility.

3.2.1.1.12.11.6	1	STARS-SSD-01144	RTQC messages from surveillance systems shall[1] be displayed.	3.1.1 3.1.10	3.1.1.2 The system must [STARS-002] process digital primary inputs from the FAA and DoD air traffic surveillance systems, if available. 3.1.1.3 The system must [STARS-003] process secondary inputs from the FAA and DoD air traffic surveillance systems. 3.1.10.3 The system must [STARS-133] based upon adaptation, display the general status of the system at each TCP.
3.2.1.1.12.11.7	1	STARS-SSD-01145	Status messages and Radar Identification messages from surveillance systems shall[1] be displayed if available unless no Parrot, PE or Radar Identification messages were adapted.	3.1.1 3.1.10	3.1.1.2 The system must [STARS-002] process digital primary inputs from the FAA and DoD air traffic surveillance systems, if available. 3.1.1.3 The system must [STARS-003] process secondary inputs from the FAA and DoD air traffic surveillance systems. 3.1.10.3 The system must [STARS-133] based upon adaptation, display the general status of the system at each TCP.
3.2.1.1.12.11.9	1	STARS-SSD-01146	The system shall[1] generate either an alert or alarm when a Status message from a radar indicates a radar abnormal condition or non-operational condition respectively.	3.1.1 3.1.10	3.1.1.2 The system must [STARS-002] process digital primary inputs from the FAA and DoD air traffic surveillance systems, if available. 3.1.1.3 The system must [STARS-003] process secondary inputs from the FAA and DoD air traffic surveillance systems. 3.1.10.3 The system must [STARS-133] based upon adaptation, display the general status of the system at each TCP. 3.1.10.25 The system must [STARS-155] generate visual alerts based upon the adaptation of each individual facility.

3.2.1.1.12.11.9	3	STARS-SSD-01147	When a status message from a long-range radar indicates that the radar is in Beacon Offset mode, and an adaptable parameter is set to discard data, then the system shall[3] discard target data and weather data from that radar.	3.1.1	3.1.1.3 The system must [STARS-003] process secondary inputs from the FAA and DoD air traffic surveillance systems. 3.1.1.4 The system must [STARS-004] display digital weather inputs from FAA and DoD air traffic surveillance systems, when available.
3.2.1.1.12.12	1	STARS-SSD-01148	Notification data including the date and time shall[1] be generated when any of the following FSL conditions are detected: a. Alarm b. Alert c. Error d. State change e. Return to Normal f. Function Enable/Disable	3.1.11	3.1.11.3 The system must [STARS-173] record all data necessary to recreate system status, performance, environment, and situation displays. 3.1.11.5 All recorded data must [STARS-175] be time stamped and synchronized to a calibrated national standard time source.
3.2.1.1.12.12	8	STARS-SSD-01149	Redundant or duplicate notifications shall[8] be filtered out.	3.1.11	3.1.11.3 The system must [STARS-173] record all data necessary to recreate system status, performance, environment, and situation displays. 3.1.11.5 All recorded data must [STARS-175] be time stamped and synchronized to a calibrated national standard time source.
3.2.1.1.12.13	1	STARS-SSD-01150	The FSL MCP shall[1] display network switch status as "Degraded" if one or two switch ports are failed and "Fail" if three or more switch ports are failed.	3.1.10	3.1.10.3 The system must [STARS-133] based upon adaptation, display the general status of the system at each TCP.
3.2.1.1.12.14.1	1	STARS-SSD-01151	The system shall[1] generate a report message for ADS-B reports that are not test targets when any ADS-B report contains a NIC, NACp or SIL value below the relevant adapted minimum value.	3.1.1	3.1.1.5 The system must [STARS-005] process ADS-B from the Surveillance Broadcast System (SBS).
3.2.1.1.12.14.1	4	STARS-SSD-01152	The system shall[4] generate a report message for ADS-B reports that are not test targets when any ADS-B report has either a Validation Status of "Report determined to be invalid", or discarded due to ADS-B Data Quality Parameter.	3.1.1	3.1.1.5 The system must [STARS-005] process ADS-B from the Surveillance Broadcast System (SBS).

3.2.1.1.12.14.2	1	STARS-SSD-01153	The average ADS-B target latency, as derived from the Position TOA, shall[1] be compared with an adaptable threshold to detect an ADS-B error, generate an alert and update the status at the MCP.	3.1.1 3.1.10	3.1.1.5 The system must [STARS-005] process ADS-B from the Surveillance Broadcast System (SBS). 3.1.10.3 The system must [STARS-133] based upon adaptation, display the general status of the system at each TCP. 3.1.10.25 The system must [STARS-155] generate visual alerts based upon the adaptation of each individual facility.
3.2.1.1.12.14.3	1	STARS-SSD-01154	The percentage of tracks whose average ADS-B update interval exceeds the update interval adapted for the sensor shall[1] be monitored against adaptable thresholds to detect an ADS-B update interval error at the CTV/SV level, generate an alert and update the interval status at the MCP.	3.1.1 3.1.10	3.1.1.5 The system must [STARS-005] process ADS-B from the Surveillance Broadcast System (SBS). 3.1.10.3 The system must [STARS-133] based upon adaptation, display the general status of the system at each TCP. 3.1.10.25 The system must [STARS-155] generate visual alerts based upon the adaptation of each individual facility.
3.2.1.1.12.14.4	1	STARS-SSD-01155	An alert shall[1] be generated when any of the following occurs outside the adapted thresholds during an adapted time interval: a. The number of ADS-B Test messages b. The horizontal position in a Test Target message c. The Test Target Address is different.	3.1.1 3.1.10	3.1.1.5 The system must [STARS-005] process ADS-B from the Surveillance Broadcast System (SBS). 3.1.10.25 The system must [STARS-155] generate visual alerts based upon the adaptation of each individual facility.
3.2.1.1.12.14.5	1	STARS-SSD-01156	The system shall[1] generate an alert and update the status at the MCP when a CTV/SV ADS-B Service Status Report is received with any of the following issues: a. The report is received more or less often than adapted b. The Time of Status differs from the time of receipt by more than what is adapted c. The received status is “ADS-B Reports Discarded” d. The received status indicates and “Off-Line” condition.	3.1.1 3.1.10	3.1.1.5 The system must [STARS-005] process ADS-B from the Surveillance Broadcast System (SBS). 3.1.10.3 The system must [STARS-133] based upon adaptation, display the general status of the system at each TCP. 3.1.10.25 The system must [STARS-155] generate visual alerts based upon the adaptation of each individual facility.
3.2.1.1.12.14.6	1	STARS-SSD-01157	The system shall[1] generate a report message when any ADS-B report indicates that a duplicate Target Address condition has been detected.	3.1.1 3.1.9 3.1.10	3.1.1.5 The system must [STARS-005] process ADS-B from the Surveillance Broadcast System (SBS).

3.2.1.1.12.14.7.1	1	STARS-SSD-01158	During the system workload sampling interval, statistics shall[1] be maintained for the following ADS-B reports: a. That don't include all required fields b. That have a Version number different from adaptation c. That have a Source Identifier not in adaptation d. That have a TOA or TOMR above or below the adapted range for non-test targets e. That have the same NIC value for non-test targets f. That have a not available NACp or NACv value for non-test targets g. That have a SIL value = "other", 1 x 10-3 , 1 x 10-5 , 1 x 10-7 per flight hour or sample h. That have Duplicate Address Flag set i. That have a SIL supplement indicating information is based on probability j. That have an Enhanced Validation status within an adaptable distance k. That have a Geometric Vertical Accuracy of Unknown/>150 m, ≤ 150m, or ≤ 45m l. That have a NIC6 Supplement indicating NIC6 Containment Radius of 0.6, 0.5, or 0.3 NM m. That have a System Design Assurance Level = "other", Level D, C, or B n. That have a Data Source Qualifier not in adaptation o. For reports that fall outside the area of interest.	3.1.1	3.1.1.5 The system must [STARS-005] process ADS-B from the Surveillance Broadcast System (SBS).
3.2.1.1.12.14.7.2	1	STARS-SSD-01159	The system shall[1] maintain statistics for Service Status Reports Expected or Received for each CTV/SV.	3.1.1	3.1.1.5 The system must [STARS-005] process ADS-B from the Surveillance Broadcast System (SBS).
3.2.1.1.12.14.7.2	2	STARS-SSD-01160	The system shall[2] generate a report message when any Service Status Report is received with a version number other than that in adaptation.	3.1.1	3.1.1.5 The system must [STARS-005] process ADS-B from the Surveillance Broadcast System (SBS).
3.2.1.1.12.14.7.2	3	STARS-SSD-01161	The system shall[3] maintain the following CTV/SV statistics: a. ADS-B Reports Discarded. b. ADS-B Messages Received. c. 1090ES Position Outlier Count. d. Count of ADS-B Service Status indications of DEGRADED. e. Count of ADS-B Service Status indications of OFFLINE.	3.1.1	3.1.1.5 The system must [STARS-005] process ADS-B from the Surveillance Broadcast System (SBS).

3.2.1.1.12.15	1	STARS-SSD-01162	The system shall [1] generate an alarm when a Status message from the TBFM interface indicates a failure condition or has not been received for an adapted time.	3.1.10	3.1.10.25 The system must [STARS-155] generate visual alerts based upon the adaptation of each individual facility.
3.2.1.1.13.1.1.1	1	STARS-SSD-01163	The computer hardware resource data sampling interval used for performance data collection shall[1] be adaptable and real time selectable.	3.1.11	3.1.11.3 The system must [STARS-173] record all data necessary to recreate system status, performance, environment, and situation displays.
3.2.1.1.13.1.1.2	1	STARS-SSD-01164	The peak percentage of processor and memory capacity in use during the computer resource data sampling interval shall[1] be determined.	3.1.11	3.1.11.3 The system must [STARS-173] record all data necessary to recreate system status, performance, environment, and situation displays.
3.2.1.1.13.1.1.4	1	STARS-SSD-01165	The error rate at each network connection, during the computer hardware resource data sampling interval, shall[1] be determined for each FSL subsystem computer.	3.1.11	3.1.11.3 The system must [STARS-173] record all data necessary to recreate system status, performance, environment, and situation displays.
3.2.1.1.13.1.1.5	1	STARS-SSD-01166	Percentages of memory capacity utilization shall[1] be compared against adaptable thresholds to determine an alarm or alert condition.	3.2.3	3.2.3.6 The system memory must [STARS-236] have a minimum 50-percent reserve capacity when initially fielded.
3.2.1.1.13.1.2.1	1	STARS-SSD-01167	The system workload data sampling interval used for performance data collection shall[1] be adaptable.	3.1.11	3.1.11.3 The system must [STARS-173] record all data necessary to recreate system status, performance, environment, and situation displays.
3.2.1.1.13.1.2.2	1	STARS-SSD-01168	The system shall[1] determine the maximum number of following elements during the system workload data sampling interval: a. Associated Tracks b. Unassociated Tracks c. Remaining Tracks d. Training Tracks e. New Tracks f. Deleted Tracks	3.1.11	3.1.11.3 The system must [STARS-173] record all data necessary to recreate system status, performance, environment, and situation displays.
3.2.1.1.13.1.2.3	1	STARS-SSD-01169	The number of flight plans in use, the number remaining and the percentage of remaining shall[1] be determined during the system workload data sampling interval.	3.1.11	3.1.11.3 The system must [STARS-173] record all data necessary to recreate system status, performance, environment, and situation displays.
3.2.1.1.13.1.2.4	1	STARS-SSD-01170	During the system workload data sampling interval, the peak and average count of primary radar only, beacon only and radar reinforced targets per scan shall[1] be determined to a level of accuracy that corresponds to the maximum number of targets that fall within any 150 millisecond period.	3.1.11	3.1.11.3 The system must [STARS-173] record all data necessary to recreate system status, performance, environment, and situation displays.
3.2.1.1.13.1.2.4	2	STARS-SSD-01171	During the system workload data sampling interval, the minimum, average, and maximum processing time shall[2] be determined.	3.1.11	3.1.11.3 The system must [STARS-173] record all data necessary to recreate system status, performance, environment, and situation displays.

3.2.1.1.13.1.2.5	1	STARS-SSD-01172	Percentages of remaining system workload capacity shall[1] be compared against adaptable thresholds to determine an alarm or alert condition.	3.2.3	3.2.3.5 The system processors must [STARS-235] have a minimum 50-percent reserve capacity when initially fielded. 3.2.3.6 The system memory must [STARS-236] have a minimum 50-percent reserve capacity when initially fielded. 3.2.3.7 The system LAN must [STARS-237] have a minimum 50-percent reserve capacity when initially fielded.
3.2.1.1.13.1.2.6	1	STARS-SSD-01173	During the system workload data sampling interval, the minimum, average, and maximum Comms Loop time shall[1] be determined. (STARS only)	3.1.11	3.1.11.3 The system must [STARS-173] record all data necessary to recreate system status, performance, environment, and situation displays.
3.2.1.1.13.1.2.7	1	STARS-SSD-01174	The minimum, average, and maximum RAID capacity used shall[1] be determined in each system workload data sampling interval.	3.1.11	3.1.11.3 The system must [STARS-173] record all data necessary to recreate system status, performance, environment, and situation displays.
3.2.1.1.13.2	1	STARS-SSD-01175	The maximum, minimum, and average value of each data item specified in Collection Of Performance Data section above shall[1] be computed and displayed over an adaptable summarization interval when one is not specified by an operator, or if specified by an operator annotations may be added.	3.1.10	3.1.10.3 The system must [STARS-133] based upon adaptation, display the general status of the system at each TCP.
3.2.1.1.13.2	2	STARS-SSD-01176	Upon MCP initiation and a user entered collection time, the following data for the RTQC Check Report shall[2] be collected and made available to print, on a per radar basis with the results displayed at the initiating MCP: a. Radar Reinforced & Unreasonable Altitude Change Rate b. Mode C & 3/A Validity c. Search & Beacon RTQC Reliability d. Zero Code e. Search & Beacon Blip/Scan f. Beacon Azimuth & Range Splits g. Long Range Radar reports with Bit 25 set h. Average Beacon Hit Rate i. Average Search & Beacon Run Length j. Percentage of reports for each Quality, Confidence & Track Eligibility level k. Aircraft Address Uniqueness (Mode S radars only)	3.1.9 3.1.10 3.1.12	3.1.9.5 The system must [STARS-115] provide a controller with the ability to manipulate the presentation of information on an individual situation display. 3.1.10.3 The system must [STARS-133] based upon adaptation, display the general status of the system at each TCP. 3.1.12.4 The system must [STARS-184] provide ATC operational information, including graphical plots, in electronic printable form.

3.2.1.1.13.2	3	STARS-SSD-01177	PARROT, PE and ADS-B Test Message reliability data shall[3] be collected per radar or ADS-B Radio Station and made available for display at the MCP.	3.1.1 3.1.10	3.1.1.2 The system must [STARS-002] process digital primary inputs from the FAA and DoD air traffic surveillance systems, if available. 3.1.1.3 The system must [STARS-003] process secondary inputs from the FAA and DoD air traffic surveillance systems. 3.1.1.5 The system must [STARS-005] process ADS-B from the Surveillance Broadcast System (SBS). 3.1.10.3 The system must [STARS-133] based upon adaptation, display the general status of the system at each TCP.
3.2.1.1.14.1	1	STARS-SSD-01178	Keyboard entry at a local TCW, TDW or MCW shall[1] be capable of initiating MCP functionality at that workstation.	3.1.9	3.1.9.6 The system must [STARS-116] allow for the control of global system information.
3.2.1.1.14.1	2	STARS-SSD-01179	More than one MCP can be active at one time but only one shall[2] have the authority to control resources.	3.1.9	3.1.9.6 The system must [STARS-116] allow for the control of global system information.
3.2.1.1.14.1	3	STARS-SSD-01180	Keyboard entry at an MCP shall[3] establish or demand controlling authority from all other active MCPs.	3.1.9	3.1.9.6 The system must [STARS-116] allow for the control of global system information.
3.2.1.1.14.1	4	STARS-SSD-01181	The following resources shall[4] be controlled by the MCP with controlling authority: a. Subsystem computers b. Serial interface hardware and associated interfaces c. External network hardware and associated interfaces d. GPS Time Source e. CDR RAID devices and associated hardware f. External AIG interfaces g. ABPE interfaces	3.1.9	3.1.9.6 The system must [STARS-116] allow for the control of global system information.
3.2.1.1.14.1	5	STARS-SSD-01182	The following resources shall[5] be controlled by the MCP with controlling authority (STARS LITE only): a. Serial interface hardware and associated interfaces b. CDR devices c. GPS Time Source	3.1.9	3.1.9.6 The system must [STARS-116] allow for the control of global system information.
3.2.1.1.14.1	6	STARS-SSD-01183	Transfer of software components, software baselines and adaptation data shall[6] be controlled by MCP input.	3.1.9	3.1.9.6 The system must [STARS-116] allow for the control of global system information.

3.2.1.1.14.1	7	STARS-SSD-01184	The capability shall[7] be provided to install software baselines and adaptation data sets from electronic media. (STARS LITE only)	3.1.9	3.1.9.6 The system must [STARS-116] allow for the control of global system information.
3.2.1.1.14.1	8	STARS-SSD-01185	The MCP shall[8] be capable of initiating diagnostics, to detect and localize to the LRU the source of hardware failures, for both subsystem computers and serial interface hardware.	3.1.9	3.1.9.6 The system must [STARS-116] allow for the control of global system information.
3.2.1.1.14.1	9	STARS-SSD-01186	The TBFM logical AIG interfaces, for both main and alternate paths, shall[9] be controlled by the FSL MCPs.	3.1.9	3.1.9.6 The system must [STARS-116] allow for the control of global system information.
3.2.1.1.14.1	10	STARS-SSD-01187	TCP input on EFSL shall[10] control the IDFT/AIG Out Switch to select EFSL or FSL, and put the following EFSL resources online or offline respectively: a. EFSL ETMS external interface main and alternate feeds b. EFSL IFDT systems external main and alternate feeds	3.1.9 3.2.1	3.1.9.6 The system must [STARS-116] allow for the control of global system information. 3.2.1.3 Independent Access: Each TCP must [STARS-213] have independent access to Full and Emergency Full Service levels.
3.2.1.1.14.2	1	STARS-SSD-01188	Allocation of specific software components or baselines for operational use shall[1] be controlled by MCP keyboard entry.	3.1.9	3.1.9.6 The system must [STARS-116] allow for the control of global system information.
3.2.1.1.14.2	2	STARS-SSD-01189	The MCP shall[2] be capable of a keyboard entry to initiate a Cold or Warm start of the entire subsystem or selected components of the subsystem.	3.1.9	3.1.9.6 The system must [STARS-116] allow for the control of global system information.
3.2.1.1.14.2	3	STARS-SSD-01190	The MCP shall[3] be capable of configuring any subsystem component to an On-line, Off-line or Standby, if capable, state.	3.1.9	3.1.9.6 The system must [STARS-116] allow for the control of global system informa¬tion.
3.2.1.1.14.2	4	STARS-SSD-01191	The MCP shall[4] be capable of a keyboard entry to partition the subsystem computers, initiate new versions of software in either partition and initiate separate instances of software in any partition.	3.1.9	3.1.9.6 The system must [STARS-116] allow for the control of global system information.
3.2.1.1.14.2	5	STARS-SSD-01192	Before allowing a cut-over to a new adaptation or software baseline the system shall[5] verify that the selected software and adaptation data files are compatible.	9.1.6	9.1.6.2 All adaptive, perfective, and corrective STARS software maintenance including site adaptation, must [STARS-622] be maintained under FAA management via maintenance personnel located at the SCSC as well as at the OSFs.

3.2.1.1.14.2	6	STARS-SSD-01193	Recovery from a system wide power failure shall[6] return the system to its pre-failure state with some minor exceptions.	3.1.11 3.2.2	3.1.11.6 The system must [STARS-176] continuously record all critical data required for recovery. 3.2.2.3 The system must [STARS-223] recover from power failure to the same operational state as before the failure.
3.2.1.1.14.2	7	STARS-SSD-01194	Recovery from a single resource failure of a redundant resource shall[7] occur automatically if enabled.	3.1.11 3.2.2	3.1.11.6 The system must [STARS-176] continuously record all critical data required for recovery. 3.2.2.3 The system must [STARS-223] recover from power failure to the same operational state as before the failure.
3.2.1.1.14.2	8	STARS-SSD-01195	Automatic subsystem restart shall[8] be enabled and disabled by MCP Input.	3.1.11 3.2.2	3.1.11.6 The system must [STARS-176] continuously record all critical data required for recovery. 3.2.2.3 The system must [STARS-223] recover from power failure to the same operational state as before the failure.
3.2.1.1.14.2	9	STARS-SSD-01196	Current adaptation data shall[9] be saved locally at each subsystem processor.	3.1.11	3.1.11.3 The system must [STARS-173] record all data necessary to recreate system status, performance, environment, and situation displays. 3.1.11.6 The system must [STARS-176] continuously record all critical data required for recovery.
3.2.1.1.14.3	1	STARS-SSD-01197	An MCP keyboard entry shall[1] be capable of initiating diagnostic tests on any external serial interface, enabling or disabling the flow of data from an external interface and enabling or disabling the weather presentation form any surveillance radar.	3.1.9	3.1.9.6 The system must [STARS-116] allow for the control of global system information.
3.2.1.1.14.3	2	STARS-SSD-01198	Diagnostic test results for On-line hardware will be used to update air traffic and MCP functions where test results for Off-line hardware shall[2] only be available at the MCP.	9.2.4	9.2.4.1 STARS must [STARS-661] continuously monitor, log, and record the health of STARS including telecommunications, components, external interfaces, and system services.

3.2.1.1.14.3	3	STARS-SSD-01199	Upon initiation the system shall[3] calculate registration correction factors for each radar pair identified in adaptation or use ADS-B data if available.	3.1.1	3.1.1.2 The system must [STARS-002] process digital primary inputs from the FAA and DoD air traffic surveillance systems, if available. 3.1.1.3 The system must [STARS-003] process secondary inputs from the FAA and DoD air traffic surveillance systems. 3.1.1.5 The system must [STARS-005] process ADS-B from the Surveillance Broadcast System (SBS).
3.2.1.1.14.3	4	STARS-SSD-01200	Adaptable parameters shall[4] specify the time interval, sample size and geographic area for RTQC correction factor calculations.	3.1.1	3.1.1.2 The system must [STARS-002] process digital primary inputs from the FAA and DoD air traffic surveillance systems, if available. 3.1.1.3 The system must [STARS-003] process secondary inputs from the FAA and DoD air traffic surveillance systems.
3.2.1.1.14.3	5	STARS-SSD-01201	MCP keyboard entries shall[5] be capable of initiating and selecting system derived registration correction factors as well as manually entered factors.	3.1.9	3.1.9.6 The system must [STARS-116] allow for the control of global system information.
3.2.1.1.14.3	6	STARS-SSD-01202	The system shall[6] accept and apply manual or system generated registration correction factors that are within an adaptable numerical interval to radar target data.	3.1.9	3.1.9.6 The system must [STARS-116] allow for the control of global system information.
3.2.1.1.14.3	7	STARS-SSD-01203	MCP keyboard entries shall[7] be available to perform the following: a. Discard selected registration correction factors b. Exclude radars from data collection and registration correction factor calculations c. Apply or discard registration correction factors to surveillance processing functions d. Enable/Disable ringaround beacon target suppression by radar and range e. Enable/Disable reflected beacon target suppression by radar and range-azimuth. f. Enable/Disable the reporting of the status of each adapted PARROT, PE, and RTQC	3.1.9	3.1.9.6 The system must [STARS-116] allow for the control of global system information.

3.2.1.1.14.3	8	STARS-SSD-01204	When the calculated registration correction factors are outside an adaptable numerical interval, the system shall[8] generate an alert, discard the calculated correction factors, and substitute the correction factor last used for this radar in place of the discarded factors.	3.1.10	3.1.10.25 The system must [STARS-155] generate visual alerts based upon the adaptation of each individual facility.
3.2.1.1.14.3	9	STARS-SSD-01205	If reporting is inhibited for a PARROT, PE or RTQC, its status shall[9] not contribute to the status of its associated radar.	3.1.1	3.1.1.2 The system must [STARS-002] process digital primary inputs from the FAA and DoD air traffic surveillance systems, if available. 3.1.1.3 The system must [STARS-003] process secondary inputs from the FAA and DoD air traffic surveillance systems.
3.2.1.1.14.3	10	STARS-SSD-01206	When Wide Area Multilateration surveillance data is available, the system shall[10] utilize the data to calculate radar range and azimuth registration correction factors.	3.1.1	3.1.1.2 The system must [STARS-002] process digital primary inputs from the FAA and DoD air traffic surveillance systems, if available. 3.1.1.3 The system must [STARS-003] process secondary inputs from the FAA and DoD air traffic surveillance systems.
3.2.1.1.14.4	1	STARS-SSD-01207	When enabled by a site adaptation parameter, MCP input shall[1] allow a user with administrator privilege to view and modify the following parameters: a. System Parameters 1. Primary Track Minimum & Maximum Speed 2. Primary Track Scan to Scan Speed Change Threshold 3. Slow Primary Track Drop Timeout 4. Display of ASR-9 or ASR-11 correlated radar-only targets b. Radar Parameters 1. Primary Track Initiation Minimum Reports 2. Primary Track Initiation Maximum Scans 3. Target Quality Filtering enable/disable and threshold 4. Tentative Track Delay 5. Track Establishment Minimum Distance	3.1.9 3.1.10	3.1.9.6 The system must [STARS-116] allow for the control of global system information. 3.1.10.2 The system must [STARS-132], based upon adaptation, display general information for the facility at each TCP.
3.2.1.1.14.4	2	STARS-SSD-01208	When a user attempts to modify the parameters in partition A, a dialog box and warning banner shall[2] appear on the MCP and require that the user provide additional MCP input before changing any parameter.	3.1.10	3.1.10.25 The system must [STARS-155] generate visual alerts based upon the adaptation of each individual facility.

3.2.1.1.14.5	1	STARS-SSD-01209	MCP input shall[1] enable/disable Dynamic Bias Correction per 3.2.1.1.2.4[2].	3.1.9	3.1.9.6 The system must [STARS-116] allow for the control of global system information.
3.2.1.1.15.1	1	STARS-SSD-01210	MCP input shall[1] initiate the following diagnostics on a subsystem computer or serial interface hardware when that hardware is in the Off-line state: a.CPU Status Check b.Hardware Configuration c. Hard Disk d. Virtual Memory Usage Check e. General SIO diagnostic (SIO only) f. Network Interface	3.1.9	3.1.9.6 The system must [STARS-116] allow for the control of global system information.
3.2.1.1.15.1	2	STARS-SSD-01211	Periodic On-line diagnostic tests shall[2] be performed, without human intervention, to verify that the following components are operating within acceptable ranges: a. CPU Status Check b. Hardware Configuration c. Hard Disk	9.2.4	9.2.4.1 STARS must [STARS-661] continuously monitor, log, and record the health of STARS including telecommunications, components, external interfaces, and system services.
3.2.1.1.15.1	3	STARS-SSD-01212	Periodic on-line tests shall[3] be performed, based on MCP selection, to verify that application and adaptation data files are for the same release level and have not been corrupted.	3.1.9	3.1.9.6 The system must [STARS-116] allow for the control of global system information.
3.2.1.1.15.1	4	STARS-SSD-01213	MCP input shall[4] initiate the following diagnostics, and prevent a second instance from being initiated, on a subsystem computer when that hardware is in the On-line state: a. CPU Status Check b. Hardware Configuration c. Hard Disk d. Network Interface e. DRD1 f. DRD2	3.1.9	3.1.9.6 The system must [STARS-116] allow for the control of global system information.
3.2.1.1.15.1	5	STARS-SSD-01214	Results of On-line, Off-line or periodic diagnostic tests shall[5] be displayed at the MCP and alert notification provided upon failure of any periodic test.	3.1.10	3.1.10.25 The system must [STARS-155] generate visual alerts based upon the adaptation of each individual facility.

3.2.1.1.15.2	1	STARS-SSD-01215	MCP input shall[1] initiate the following Resource Verification test, on either PRTA or B, when that hardware is in the On-line or Standby state: a. CPU Status Check b. Hardware Configuration c. Hard Disk d. Network Interface e. Application or Adaptation file corruption f. Application or Adaptation file version check	3.1.9	3.1.9.6 The system must [STARS-116] allow for the control of global system information.
3.2.1.1.15.2	2	STARS-SSD-01216	MCP input shall[2] prevent initiation of Resource Verification if it is already running, or on-line diagnostics or PV are running.	3.1.9	3.1.9.6 The system must [STARS-116] allow for the control of global system information.
3.2.1.1.15.2	3	STARS-SSD-01217	Once initiated, Resource Verification tests shall[3] run to completion or termination.	(Derived)	(Derived)
3.2.1.1.15.2	4	STARS-SSD-01218	Resource Verification test report shall[4] contain a summary of the test with time and date stamp along with status of what passed and failed, at the initiating MCP, with an option to print.	3.1.9	3.1.9.6 The system must [STARS-116] allow for the control of global system information. 3.1.10.3 The system must [STARS-133] based upon adaptation, display the general status of the system at each TCP.
3.2.1.1.15.3	1	STARS-SSD-01219	MCP input shall[1] initiate PV tests, with a user selectable scenario, at any time unless PV or Resource Verification or On-line diagnostics are already running.	3.1.9	3.1.9.6 The system must [STARS-116] allow for the control of global system information.
3.2.1.1.15.3	2	STARS-SSD-01220	Once initiated, Performance Verification tests shall[2] run to completion or termination.	(Derived)	(Derived)
3.2.1.1.15.3	3	STARS-SSD-01221	PV tests shall[3] be executed using simulated surveillance and flight data with results displayed on a designated TCW/TDW.	3.1.10	3.1.10.3 The system must [STARS-133] based upon adaptation, display the general status of the system at each TCP.

3.2.1.1.15.3	4	STARS-SSD-01222	PV shall[4] test the following FSL processing: a. Permanent Echo b. PARROT c. RTQC Test Targets d. Fixed Beacon Test Targets e. Non-radar Sensor Status f. Special Condition Code processing for radar sensors g. Special Condition Code processing for non-radar sensors h. Conflict Alert i. Minimum Safe Altitude Warning j. FMA, including PRM-A (where applicable)	7.1.1	7.1.1.4 STARS Test Program must [STARS-534] ensure that the functional and performance requirements have been met in an operational environment in accordance with FAA-E-2904 STARS System Specification Document (SSD).
3.2.1.1.15.3	5	STARS-SSD-01223	When in Normal mode, FSL shall[5] loop back the data from one of the radars in the PV scenario through the dedicated PV serial interface hardware.	(Derived)	(Derived)
3.2.1.1.15.3	6	STARS-SSD-01224	Performance Verification test report shall[6] contain a summary of the test with time and date stamp along with status of what passed, failed and any deviations at the initiating MCP.	3.1.10	3.1.10.3 The system must [STARS-133] based upon adaptation, display the general status of the system at each TCP.
3.2.1.1.16.1	1	STARS-SSD-01225	Data recording shall[1] be carried out on a continual basis if the equipment is available.	3.1.11	3.1.11.1 The system must [STARS-171] continuously record all input and output messages from internal sources. 3.1.11.2 The system must [STARS-172] continuously record all input and output messages from external sources.
3.2.1.1.16.2	2	STARS-SSD-01226	In a disk-based environment, data shall[2] be recorded to two independent disk-based recording devices that are, at a minimum, configured to a RAID level 5.	3.1.11	3.1.11.4 All operational data, including hardware configuration, must [STARS-174] be recorded on a removable, nonvolatile electronic medium.
3.2.1.1.16.2	3	STARS-SSD-01227	The System shall[3] provide the capability to copy recorded data to a removable media.	3.1.11	3.1.11.4 All operational data, including hardware configuration, must [STARS-174] be recorded on a removable, nonvolatile electronic medium.
3.2.1.1.16.3	1	STARS-SSD-01228	A minimum of twenty-four hours of system data shall[1] be recorded on one or more elements of the same recording medium without operator intervention while the system operates under the maximum workload and response.	3.1.11	3.1.11.4 All operational data, including hardware configuration, must [STARS-174] be recorded on a removable, nonvolatile electronic medium.

3.2.1.1.16.4	1	STARS-SSD-01229	Recording shall[1] continue without loss of data if only one of the recording devices is full or has failed.	3.1.11	3.1.11.1 The system must [STARS-171] continuously record all input and output messages from internal sources. 3.1.11.2 The system must [STARS-172] continuously record all input and output messages from external sources.
3.2.1.1.16.5	1	STARS-SSD-01230	Each data record shall[1] have a date and time stamp applied when the event occurs.	3.1.11	3.1.11.5 All recorded data must [STARS-175] be time stamped and synchronized to a calibrated national standard time source.
3.2.1.1.16.6	1	STARS-SSD-01231	CDR data shall[1] be recorded and retained for the current and previous 45 days with the recording device set to automatically overwrite data beginning on the 46th day.	3.1.11	3.1.11.4 All operational data, including hardware configuration, must [STARS-174] be recorded on a removable, nonvolatile electronic medium.
3.2.1.1.16.7	1	STARS-SSD-01232	With the exception of ADS-B non-test target reports that fall outside the adapted overall area of interest, all sensor target report data shall[1] be recorded.	3.1.11	3.1.11.2 The system must [STARS-172] continuously record all input and output messages from external sources.
3.2.1.1.16.7	2	STARS-SSD-01233	All flight plan, including Interfacility messages, tracking, TFMS, TBFM, ABPE and data that enters or leaves via the AIG shall[2] be recorded.	3.1.11	3.1.11.1 The system must [STARS-171] continuously record all input and output messages from internal sources. 3.1.11.2 The system must [STARS-172] continuously record all input and output messages from external sources.
3.2.1.1.16.7	3	STARS-SSD-01234	All data entry inputs from a TCW, TDW or MCP shall[3] be recorded.	3.1.11	3.1.11.3 The system must [STARS-173] record all data necessary to recreate system status, performance, environment, and situation displays.
3.2.1.1.16.7	4	STARS-SSD-01235	All Performance data, MCP notification data, error condition data, system configuration data, security audit data and data used to create a TCP display shall[4] be recorded.	3.1.11	3.1.11.3 The system must [STARS-173] record all data necessary to recreate system status, performance, environment, and situation displays.
3.2.1.1.16.7	5	STARS-SSD-01236	All alert and alarm data, including when the aural alarm is initiated and cancelled, shall[5] be recorded.	3.1.11	3.1.11.3 The system must [STARS-173] record all data necessary to recreate system status, performance, environment, and situation displays.
3.2.1.1.16.7	6	STARS-SSD-01237	Site identity, software version, adaptation version, and record start/end time shall[6] be recorded.	3.1.11	3.1.11.3 The system must [STARS-173] record all data necessary to recreate system status, performance, environment, and situation displays. 3.1.11.5 All recorded data must [STARS-175] be time stamped and synchronized to a calibrated national standard time source.

3.2.1.1.16.7	7	STARS-SSD-01238	Results of Periodic Background, Verification and Registration and Collimation testing and calculations shall[7] be recorded.	3.1.11	3.1.11.3 The system must [STARS-173] record all data necessary to recreate system status, performance, environment, and situation displays.
3.2.1.1.16.7	8	STARS-SSD-01239	All FDIO data received, Ghost data block information and TPA/ATPA cones, rings, warnings, alerts and In-trail separation minimum data shall[8] be recorded.	3.1.11	3.1.11.1 The system must [STARS-171] continuously record all input and output messages from internal sources. 3.1.11.2 The system must [STARS-172] continuously record all input and output messages from external sources.
3.2.1.1.16.8	1	STARS-SSD-01240	The CDR Subsystem shall[1] monitor and report storage capacity status when capacity reaches 90% and when 95% is reached begin to delete the oldest recorded data in order to allow current data to be recorded.	3.1.11	3.1.11.4 All operational data, including hardware configuration, must [STARS-174] be recorded on a removable, nonvolatile electronic medium.
3.2.1.1.17	1	STARS-SSD-01241	The system shall[1] permit record and replay activities to occur simultaneously.	3.1.12	3.1.12.3 The recorded data must [STARS-183] be played back without interference or interaction with the live operational system.
3.2.1.1.17	2	STARS-SSD-01242	Recorded data shall[2] be used to reconstitute a selected TCW/TDW display for a specified period of time at the recorded speed.	3.1.12	3.1.12.1 The system must [STARS-181] play back recorded data to one or more TCWs.
3.2.1.1.17	3	STARS-SSD-01243	MCP input shall[3] be capable of selecting start, stop and position to replay data to as well as initiating the replay.	3.1.12	3.1.12.1 The system must [STARS-181] play back recorded data to one or more TCWs.
3.2.1.1.17	4	STARS-SSD-01244	TCP input shall[4] be capable of freezing and reinitiating a replay.	3.1.12	3.1.12.1 The system must [STARS-181] play back recorded data to one or more TCWs.
3.2.1.1.18.1.1	1	STARS-SSD-01245	The system shall[1] provide the capability to activate the Identification and Authentication security service for ATC functions or if not activated provide ATC and non-ATC functions without either.	3.1.14	3.1.14.1 System security must [STARS-201] be in accordance with the FAA and DoD standards identified in Appendix 3.
3.2.1.1.18.1.1	2	STARS-SSD-01246	Maintenance access shall[2] be available only upon Identification and Authentication of the operator.	3.1.14	3.1.14.1 System security must [STARS-201] be in accordance with the FAA and DoD standards identified in Appendix 3.
3.2.1.1.18.1.1	3	STARS-SSD-01247	When the Identification and Authentication security service is active, the operator shall[3] be identified and authenticated by a user name of at least 6 characters with automatic lockout compliant with FAA Order 1372A.	3.1.14	3.1.14.1 System security must [STARS-201] be in accordance with the FAA and DoD standards identified in Appendix 3.
3.2.1.1.18.1.1	4	STARS-SSD-01248	The complexity and duration between changes in authentication information shall[4] be in compliance with FAA Order 1370.121, with an adaptable time parameter enforced between such changes.	3.1.14	3.1.14.1 System security must [STARS-201] be in accordance with the FAA and DoD standards identified in Appendix 3.

3.2.1.1.18.1.1	5	STARS-SSD-01249	Authentication information shall[5] be modifiable by operators.	3.1.14	3.1.14.1 System security must [STARS-201] be in accordance with the FAA and DoD standards identified in Appendix 3.
3.2.1.1.18.1.1	6	STARS-SSD-01250	Previously authenticated operators shall[6] be automatically authenticated upon completion of recovery from a warmstart or workstation failure with the exception of MCP and GPW positions.	3.1.14	3.1.14.1 System security must [STARS-201] be in accordance with the FAA and DoD standards identified in Appendix 3.
3.2.1.1.18.1.1	7	STARS-SSD-01251	The security warning banner shall[7] be presented, until acknowledged, always at an MCP and if activated at a TCW/TDW following successful authentication.	3.1.14	3.1.14.1 System security must [STARS-201] be in accordance with the FAA and DoD standards identified in Appendix 3.
3.2.1.1.18.1.1	8	STARS-SSD-01252	The security warning banner shall[8] be presented to an operator logging in to a TAS computer (other than TCW/TDW/MCP) or TAS network device that supports the capability.	3.1.14	3.1.14.1 System security must [STARS-201] be in accordance with the FAA and DoD standards identified in Appendix 3.
3.2.1.1.18.1.3	1	STARS-SSD-01253	External computer systems that interface to the STARS automation subsystem shall[1] identify and authenticate with the exception of the following interfaces: a. En Route Surveillance Radar/STARS ICD (NAS-IC-34132105) b. Airport Surveillance Radar Model 9 (ASR9)/Standard Terminal Automation Replacement System (STARS) ICD (NAS-IC-34032105) c. Airport Surveillance Radar Model 11 (ASR-11) to Standard Terminal Automation Replacement System (STARS) ICD (NAS-IC-34112105) d. Standard Terminal Automation Replacement System (STARS) / Traffic Flow Management System (TFMS) ICD (NAS-IC-21052414) e. STARS to ARTCC for IFDT ICD (NAS-IC-21058100) f. ABPE (Digital Altimeter Setting Indicator (DASI) To Terminal Automation Systems ICD (NAS-IC-82150001-01)) g. Airport Surface Detection Equipment - Model X (ASDE-X) Multilateration Surveillance Data To Air Traffic Control (ATC) User Subsystem (NAS-IC-34180001-01) h. FDIO Software ICD (NAS-MD-581) (STARS LITE only) i. ASR-11 Radar and the Data Translation Equipment ICD (G710561) j. Surveillance and Broadcast Services (SBS) Service Delivery Point (SDP) to ATC Automation and Service Monitoring User Subsystems ICD (NAS-IC-82530001-01) k. STARS to APEX for IFDT Outside the US ICD (H372347)	3.1.14	3.1.14.1 System security must [STARS-201] be in accordance with the FAA and DoD standards identified in Appendix 3.

3.2.1.1.18.1.3	2	STARS-SSD-01254	The system shall[2] provide the capability to change the external computer identification and authentication data.	3.1.14	3.1.14.1 System security must [STARS-201] be in accordance with the FAA and DoD standards identified in Appendix 3.
3.2.1.1.18.1.4	1	STARS-SSD-01255	All electronically stored passwords and PINs shall[STARS-SSD-01255] be protected using FAA-approved hardware or software tools that are FIPS 140-2 compliant, in accordance with FAA Order 1370.103 and protected from disclosure during network transmission.	3.1.14	3.1.14.1 System security must [STARS-201] be in accordance with the FAA and DoD standards identified in Appendix 3.
3.2.1.1.18.2.1	1	STARS-SSD-01256	Access shall[1] be controlled between each security subject and object.	3.1.14	3.1.14.1 System security must [STARS-201] be in accordance with the FAA and DoD standards identified in Appendix 3.
3.2.1.1.18.2.1	2	STARS-SSD-01257	The system shall[2] restrict maintenance of operator passwords and allowed functionality to an authorized operator.	3.1.14	3.1.14.1 System security must [STARS-201] be in accordance with the FAA and DoD standards identified in Appendix 3.
3.2.1.1.18.2.1	3	STARS-SSD-01258	The system shall[2] restrict maintenance of operator passwords and allowed functionality to an authorized operator.	3.1.14	3.1.14.1 System security must [STARS-201] be in accordance with the FAA and DoD standards identified in Appendix 3.
3.2.1.1.18.2.2	1	STARS-SSD-01259	The operator classes assigned to operators shall[1] provide the capability of controlling access to functionality for each user.	3.1.14	3.1.14.1 System security must [STARS-201] be in accordance with the FAA and DoD standards identified in Appendix 3.
3.2.1.1.18.2.2	2	STARS-SSD-01260	A minimum of nine operator classes, the name, and the functionality of each shall[2] be adaptable.	3.1.14	3.1.14.1 System security must [STARS-201] be in accordance with the FAA and DoD standards identified in Appendix 3.
3.2.1.1.18.2.2	3	STARS-SSD-01261	The system shall[3] be capable of assigning multiple operator classes to each operator.	3.1.14	3.1.14.1 System security must [STARS-201] be in accordance with the FAA and DoD standards identified in Appendix 3.

3.2.1.1.18.2.3	1	STARS-SSD-01262	The system shall[1] validate the source of external data on entry into the STARS automation subsystem with the exception of the following interfaces: a. En Route Surveillance Radar/STARS ICD (NAS-IC-34132105) b. Airport Surveillance Radar Model 9 (ASR9)/Standard Terminal Automation Replacement System (STARS) ICD (NAS-IC-34032105) c. Airport Surveillance Radar Model 11 (ASR-11) to Standard Terminal Automation Replacement System (STARS) ICD (NAS-IC-34112105) d. Standard Terminal Automation Replacement System (STARS) / Traffic Flow Management System (TFMS) ICD (NAS-IC-21052414) e. STARS to ARTCC for IFDT ICD (NAS-IC-21058100) f. ABPE (Digital Altimeter Setting Indicator (DASI) To Terminal Automation Systems ICD (NAS-IC-82150001-01)) g. Airport Surface Detection Equipment - Model X (ASDE-X) Multilateration Surveillance Data To Air Traffic Control (ATC) User Subsystem (NAS-IC-34180001-01) h. FDIO Software ICD (NAS-MD-581) (STARS LITE only) i. ASR-11 Radar and the Data Translation Equipment ICD (G710561) j. Surveillance and Broadcast Services (SBS) Service Delivery Point (SDP) to ATC Automation and Service Monitoring User Subsystems ICD (NAS-IC-82530001-01) k. STARS to APEX for IFDT Outside the US ICD (H372347)	3.1.14	3.1.14.1 System security must [STARS-201] be in accordance with the FAA and DoD standards identified in Appendix 3.
3.2.1.1.18.2.3	2	STARS-SSD-01263	Packet filtering shall[2] be performed for selectable external interfaces.	3.1.14	3.1.14.1 System security must [STARS-201] be in accordance with the FAA and DoD standards identified in Appendix 3.
3.2.1.1.18.2.3	3	STARS-SSD-01264	Packet validation shall[3] be performed on the following attributes: packet source, packet destination, protocol type, protocol service, communication line/port, time of day, and day of week.	3.1.14	3.1.14.1 System security must [STARS-201] be in accordance with the FAA and DoD standards identified in Appendix 3.
3.2.1.1.18.3	1	STARS-SSD-01265	The correct operation of system security elements shall[1] be validated.	3.1.14	3.1.14.1 System security must [STARS-201] be in accordance with the FAA and DoD standards identified in Appendix 3.
3.2.1.1.18.3	2	STARS-SSD-01266	Message integrity checking shall[2] be applied to verify security and mission critical objects with operators notified of anomalies.	3.1.14	3.1.14.1 System security must [STARS-201] be in accordance with the FAA and DoD standards identified in Appendix 3.

3.2.1.1.18.4	1	STARS-SSD-01267	A security audit trail shall[1] be created/maintained for all security audit events, show traceability to the operator on the STARS system or any external system, and protect the trail from unauthorized modifications/access or destruction.	3.1.14	3.1.14.1 System security must [STARS-201] be in accordance with the FAA and DoD standards identified in Appendix 3.
3.2.1.1.18.4	2	STARS-SSD-01268	The following security relevant events shall[2] be audited, with specific events selected per operator: a. Operator identification and authentication attempts b. External interface identification and authentication attempts c. Access attempts to security and mission critical objects d. External inter-process communications failures e. System administrator and security officer actions f. Security integrity anomalies	3.1.14	3.1.14.1 System security must [STARS-201] be in accordance with the FAA and DoD standards identified in Appendix 3.
3.2.1.1.18.4	3	STARS-SSD-01269	When connected to the FAA Telecommunications Infrastructure (FTI) NAS Operational (OPIP) Network, STARS shall[3] integrate with the NAS Cyber Management System (NCMS) to support the NAS Cyber Operations (NCO) enterprise security event monitoring and detection capability, in accordance with FAA Order 1370.114 and FAA Notice 1370.46.	3.1.14	3.1.14.1 System security must [STARS-201] be in accordance with the FAA and DoD standards identified in Appendix 3.
3.2.1.1.18.4	4	STARS-SSD-01270	The following security relevant audit events shall[4] always be audited: a. Unsuccessful operator and external interface identification and authentication attempts b. System administration and security officer actions c. Security integrity anomalies	3.1.14	3.1.14.1 System security must [STARS-201] be in accordance with the FAA and DoD standards identified in Appendix 3.
3.2.1.1.18.4	5	STARS-SSD-01271	The information to be recorded with each security and operator identification/authentication audit record shall[5] be: operator ID, operator class, date, time, event type, security object, success/failure status and workstation, if applicable.	3.1.14	3.1.14.1 System security must [STARS-201] be in accordance with the FAA and DoD standards identified in Appendix 3.
3.2.1.1.18.4	6	STARS-SSD-01272	Audit reports shall[6] be viewable at the MCP in electronic media capable of being printed.	3.1.12 3.1.14	3.1.12.4 The system must [STARS-184] provide ATC operational information, including graphical plots, in electronic printable form. 3.1.14.1 System security must [STARS-201] be in accordance with the FAA and DoD standards identified in Appendix 3.

3.2.1.1.18.4	7	STARS-SSD-01273	Data Reduction and Analysis (DR&A) Extraction software shall[7] provide a security data class filter on date and time in a spreadsheet format.	3.1.14	3.1.14.1 System security must [STARS-201] be in accordance with the FAA and DoD standards identified in Appendix 3.
3.2.1.1.18.4	8	STARS-SSD-01274	The system shall[8] notify the M&C operator and the NAS Cyber Monitoring System (NCMS) upon the occurrence of an adaptable subset or all, respectively, security audit events.	3.1.14	3.1.14.1 System security must [STARS-201] be in accordance with the FAA and DoD standards identified in Appendix 3.
3.2.1.1.18.4	9	STARS-SSD-01275	The system shall[9] retain security audit event records in online storage from a configurable amount of previous days up to the current day.	3.1.14	3.1.14.1 System security must [STARS-201] be in accordance with the FAA and DoD standards identified in Appendix 3.
3.2.1.1.18.4	10	STARS-SSD-01276	The system shall[10] provide the capability to copy selected security audit event records to removable, portable media.	3.1.14	3.1.14.1 System security must [STARS-201] be in accordance with the FAA and DoD standards identified in Appendix 3.
3.2.1.1.18.4	11	STARS-SSD-01277	The system shall[1] send security audit events generated by its edge network equipment to a configurable external address via the FTI OPIP network interface.	3.1.14	3.1.14.1 System security must [STARS-201] be in accordance with the FAA and DoD standards identified in Appendix 3.
3.2.1.1.18.5	1	STARS-SSD-01278	Security administration shall[1] include the management of operator accounts, selection of security events to be audited per operator, generation of security audit reports and controlling integrity validation.	3.1.14	3.1.14.1 System security must [STARS-201] be in accordance with the FAA and DoD standards identified in Appendix 3.
3.2.1.1.18.5	2	STARS-SSD-01279	Security administration shall[2] control access between each security subject and each security object by the management of operator access controls and operator classes.	3.1.14	3.1.14.1 System security must [STARS-201] be in accordance with the FAA and DoD standards identified in Appendix 3.
3.2.1.1.18.5	3	STARS-SSD-01280	An operating system or network equipment baseline configuration shall[3] be collected, a comparison performed and report generated of selected equipment upon operator request.	3.1.14	3.1.14.1 System security must [STARS-201] be in accordance with the FAA and DoD standards identified in Appendix 3.
3.2.1.1.19	1	STARS-SSD-01281	The STARS system shall[1] accept data from and be synchronized to a single Independent GPS Time Source in accordance with an approved ICD.	3.1.11	3.1.11.5 All recorded data must [STARS-175] be time stamped and synchronized to a calibrated national standard time source.
3.2.1.1.20	1	STARS-SSD-01282	The display of the service level indication of “unavailable” at TCPs shall[1] be enabled/disabled by MCP input.	3.1.10	3.1.10.3 The system must [STARS-133] based upon adaptation, display the general status of the system at each TCP.
3.2.1.1.20	2	STARS-SSD-01283	All monitor, control and support functions, and associated data, shall[2] be accepted at any MCP.	(Derived)	(Derived)

3.2.1.1.20	3	STARS-SSD-01284	The STARS system shall[3] provide the option to select the data sampling and summarization interval at an MCP where the data will be displayed or made available for printing.	3.1.9	3.1.9.6 The system must [STARS-116] allow for the control of global system information.
3.2.1.1.20	4	STARS-SSD-01285	MCP input shall[4] allow for the switch between Normal and Test modes independently for FSL and EFSL/ESL.	3.2.1	3.2.1.3 Independent Access: Each TCP must [STARS-213] have independent access to Full and Emergency Full Service levels.
3.2.1.1.21	1	STARS-SSD-01286	The system state and time of either FSL or EFSL service level shall[1] be displayed at all MCPs associated with that respective service level.	(Derived)	(Derived)
3.2.1.1.21	2	STARS-SSD-01287	The list of selectable MCP functions and their associated enable/disable selection as well as the status of resources for either FSL or EFSL shall[2] be displayed at their respective MCPs.	(Derived)	(Derived)
3.2.1.1.21	3	STARS-SSD-01288	A graphical view of resources monitored and an indication of progress for any requested function, updated at least every 5 seconds, shall[3] be presented at either the FSL or EFSL MCPs.	(Derived)	(Derived)
3.2.1.1.21	4	STARS-SSD-01289	All FSL or EFSL notifications shall[4] be displayed at the MCP, recorded in CDR and provide for the most recent 3000 to still viewable by their respective service level.	3.1.11	3.1.11.1 The system must [STARS-171] continuously record all input and output messages from internal sources.
3.2.1.1.21	5	STARS-SSD-01290	When requested, the MCP shall[5] display the input/output data associated with the system M&C and support functions for its respective service level.	(Derived)	(Derived)
3.2.1.1.21	6	STARS-SSD-01291	All IFDT messages, with the most recent 3000 still viewable, shall[6] be displayed at the MCP, with a text reason provided for any incoming rejected message and the ability to select and save specific messages.	(Derived)	(Derived)
3.2.1.1.21	7	STARS-SSD-01292	The STARS system, upon keyboard entry, shall[7] create a printable file for the following functions: a. System messages associated with resource status changes b. Performance Monitoring reports c. System messages associated with control actions d. Results of On or Off-line diagnostic tests e. Results of Resource and Performance Verification tests f. Security Audit logs	3.1.9 3.1.12	3.1.9.6 The system must [STARS-116] allow for the control of global system information. 3.1.12.4 The system must [STARS-184] provide ATC operational information, including graphical plots, in electronic printable form.

3.2.1.1.21	8	STARS-SSD-01293	Data associated with ATC operational events, including the enable/disable of functions for the entire system or a terminal area shall[8] be made available at the MCP for display or print.	3.1.12	3.1.12.4 The system must [STARS-184] provide ATC operational information, including graphical plots, in electronic printable form.
3.2.1.1.21	9	STARS-SSD-01294	Notification of each CRDA enable/disable action shall[9] be made available for display or print at the MCP, including the source and type of action.	3.1.12	3.1.12.4 The system must [STARS-184] provide ATC operational information, including graphical plots, in electronic printable form.
3.2.1.1.22	1	STARS-SSD-01295	The AIG shall[1] provide independent, communication pathways between the STARS automation subsystem and up to the number of external systems as specified in Table 3.2.1.1.23-1.	3.1.1	3.1.1.1 The system must [STARS-001] accept aircraft position and weather data simultaneously from multiple surveillance systems within geographic areas defined by site adaptable (SA) parameters. 3.1.1.2 The system must [STARS-002] process digital primary inputs from the FAA and DoD air traffic surveillance systems, if available. 3.1.1.3 The system must [STARS-003] process secondary inputs from the FAA and DoD air traffic surveillance systems. 3.1.1.5 The system must [STARS-005] process ADS-B from the Surveillance Broadcast System (SBS). 3.1.1.6 The system must [STARS-006] process Virtual Radar (VR) from the SBS, when available.

3.2.1.1.23.1	1	STARS-SSD-01296	The FS TAS shall[1] process the workload specified in the following tables: [TABLES EMBEDDED]	3.2.8	3.2.8.1 The system must [STARS-281] have the capacity to connect to at least 16 surveillance sensors. 3.2.8.2 The system must [STARS-282] have the capacity to provide a surveillance coverage area of 2048 square nautical miles. 3.2.8.3 The system must [STARS-283] have the capacity to track 3000 (1350 for ELITE) unique aircraft. 3.2.8.4 The system must [STARS-284] have the capacity to track 600 unique associated aircraft. 3.2.8.5 The system must [STARS-285] have the capacity to process 3900 target reports consisting of aircraft and false targets. 3.2.8.6 The system must [STARS-286] have the capacity to process 3100 target reports per second. 3.2.8.7 The system must [STARS-287] have the capacity to handle 1200 Flight Plans. 3.2.8.8 The system must [STARS-288] have the capacity to connect to at least 160 (38 for ELITE) displays. 3.2.8.9 The system must [STARS-289] provide for up to 68 displays to all towers connected to a single TRACON. 3.2.8.10 The system must [STARS-290] display input data in 150 milliseconds or less from the time the data was received. 3.2.8.11 The system must [STARS-291] display ATC data in 1 second or less from the time the data was received. 3.2.8.12 The system must [STARS-292] process operator input in 1.2 seconds or less from the time the input was received.

3.2.1.1.23.1	2	STARS-SSD-01297	The FS TAS shall[2] accommodate individual capacities as specified in Tables above. In most cases, workload equals capacity and a single number appears in the table; both workload and capacity are verified in the same test. Where an individual capacity is greater than the workload, the tables use the notation: Workload/Capacity. In these cases, the "Workload" value is used for the workload test, while separate tests verify that each capacity is supported. These tables do not include all capacities; others are specified in individual requirements throughout Section 3.	3.2.8	3.2.8.1 The system must [STARS-281] have the capacity to connect to at least 16 surveillance sensors. 3.2.8.2 The system must [STARS-282] have the capacity to provide a surveillance coverage area of 2048 square nautical miles. 3.2.8.3 The system must [STARS-283] have the capacity to track 3000 (1350 for ELITE) unique aircraft. 3.2.8.4 The system must [STARS-284] have the capacity to track 600 unique associated aircraft. 3.2.8.5 The system must [STARS-285] have the capacity to process 3900 target reports consisting of aircraft and false targets. 3.2.8.6 The system must [STARS-286] have the capacity to process 3100 target reports per second. 3.2.8.7 The system must [STARS-287] have the capacity to handle 1200 Flight Plans. 3.2.8.8 The system must [STARS-288] have the capacity to connect to at least 160 (38 for ELITE) displays. 3.2.8.9 The system must [STARS-289] provide for up to 68 displays to all towers connected to a single TRACON. 3.2.8.10 The system must [STARS-290] display input data in 150 milliseconds or less from the time the data was received. 3.2.8.11 The system must [STARS-291] display ATC data in 1 second or less from the time the data was received. 3.2.8.12 The system must [STARS-292] process operator input in 1.2 seconds or less from the time the input was received.
3.2.1.1.23.1	4	STARS-SSD-01298	Two MCWs for each service level shall[4] support a total of up to five MCP displays, up to two of which can be on their respective local displays and the remaining MCP displays can be remoted to other workstations (e.g. GPW, SSS, TCW).	(Derived)	(Derived)

3.2.1.1.23.2	1	STARS-SSD-01299	The TCW or TDW operating in FS mode shall[1] display the individual data workload specified in the following table. [TABLES EMBEDDED]	3.2.8	3.2.8.1 The system must [STARS-281] have the capacity to connect to at least 16 surveillance sensors. 3.2.8.2 The system must [STARS-282] have the capacity to provide a surveillance coverage area of 2048 square nautical miles. 3.2.8.3 The system must [STARS-283] have the capacity to track 3000 (1350 for ELITE) unique aircraft. 3.2.8.4 The system must [STARS-284] have the capacity to track 600 unique associated aircraft. 3.2.8.5 The system must [STARS-285] have the capacity to process 3900 target reports consisting of aircraft and false targets. 3.2.8.6 The system must [STARS-286] have the capacity to process 3100 target reports per second. 3.2.8.7 The system must [STARS-287] have the capacity to handle 1200 Flight Plans. 3.2.8.8 The system must [STARS-288] have the capacity to connect to at least 160 (38 for ELITE) displays. 3.2.8.9 The system must [STARS-289] provide for up to 68 displays to all towers connected to a single TRACON. 3.2.8.10 The system must [STARS-290] display input data in 150 milliseconds or less from the time the data was received. 3.2.8.11 The system must [STARS-291] display ATC data in 1 second or less from the time the data was received. 3.2.8.12 The system must [STARS-292] process operator input in 1.2 seconds or less from the time the input was received.

3.2.1.1.23.3	1	STARS-SSD-01300	The TCW or TDW operating in FS mode shall[1] display the simultaneous data workload specified in the following table: [TABLES EMBEDDED]	3.2.8	3.2.8.1 The system must [STARS-281] have the capacity to connect to at least 16 surveillance sensors. 3.2.8.2 The system must [STARS-282] have the capacity to provide a surveillance coverage area of 2048 square nautical miles. 3.2.8.3 The system must [STARS-283] have the capacity to track 3000 (1350 for ELITE) unique aircraft. 3.2.8.4 The system must [STARS-284] have the capacity to track 600 unique associated aircraft. 3.2.8.5 The system must [STARS-285] have the capacity to process 3900 target reports consisting of aircraft and false targets. 3.2.8.6 The system must [STARS-286] have the capacity to process 3100 target reports per second. 3.2.8.7 The system must [STARS-287] have the capacity to handle 1200 Flight Plans. 3.2.8.8 The system must [STARS-288] have the capacity to connect to at least 160 (38 for ELITE) displays. 3.2.8.9 The system must [STARS-289] provide for up to 68 displays to all towers connected to a single TRACON. 3.2.8.10 The system must [STARS-290] display input data in 150 milliseconds or less from the time the data was received. 3.2.8.11 The system must [STARS-291] display ATC data in 1 second or less from the time the data was received. 3.2.8.12 The system must [STARS-292] process operator input in 1.2 seconds or less from the time the input was received.
3.2.1.1.23.4.1	1	STARS-SSD-01301	All response time and update rate requirements shall[1] be defined as the values at the 95th percentile.	(Derived)	(Derived)
3.2.1.1.23.4.2	1	STARS-SSD-01302	At any workstation, the time from the input of a character to its display shall[1] be less than or equal to 150 milliseconds, while operating with the defined workload tables and maintaining the resource reserves specified in Computer Resources.	3.2.8	3.2.8.10 The system must [STARS-290] display input data in 150 milliseconds or less from the time the data was received.

3.2.1.1.23.4.3	1	STARS-SSD-01303	An indication that a pointing device was actuated or moved shall[1] be provided at displays in 150 milliseconds or less after the device is actuated, while operating with the defined workload tables and maintaining the resource reserves specified in Computer Resources.	3.2.8	3.2.8.10 The system must [STARS-290] display input data in 150 milliseconds or less from the time the data was received.
3.2.1.1.23.4.5	1	STARS-SSD-01304	While operating with the defined workload tables and maintaining the resource reserves specified in Computer Resources, and not in fused-track display presentation view, the elapsed time, between receipt of target data by the automation subsystem and the display of target position and data block information, shall[1] occur within: a. 1.0 second for local positions (STARS) b. 1.0 second, plus GFE communication delay, for remote positions c. 1.2 second (STARS LITE)	3.2.8	3.2.8.1.1 The system must [STARS-291] display ATC data in 1 second or less from the time the data was received.
3.2.1.1.23.4.7	1	STARS-SSD-01305	Local display at the MCP of single-site event notification shall[1] occur within 3 seconds of the occurrence of each event, while operating with the defined workload tables and maintaining the resource reserves specified in Computer Resources.	(Derived)	(Derived)
3.2.1.1.23.4.8	1	STARS-SSD-01306	Local display at the MCP of all verification result reports shall[1] occur within 5 minutes of the completion of any verification test, while operating with the defined workload tables and maintaining the resource reserves specified in Computer Resources.	(Derived)	(Derived)
3.2.1.1.23.4.9	1	STARS-SSD-01307	When a workstation replay is requested, it shall[1] be available for display within five minutes of the request, while operating with the defined workload tables and maintaining the resource reserves specified in Computer Resources.	3.1.12	3.1.12.2 The recorded data must [STARS-182] be capable of being played back within 5 minutes of the request for playback.

3.2.1.1.23.4.10	1	STARS-SSD-01308	The functions requested by TCP input from a workstation shall[1] be completed while operating with the defined workload tables and maintaining the resource reserves specified in Computer Resources and the results displayed as follows: a. 1.2 seconds or less for local positions b. 1.2 seconds or less, plus GFE communication delay, for remote positions	3.2.8	3.2.8.12 The system must [STARS-292] process operator input in 1.2 seconds or less from the time the input was received.
3.2.1.1.23.4.12	1	STARS-SSD-01309	Automatic and manually initiated and responses to interfacility messages shall[1] begin transmission within 1.2 seconds after the transmission request is initiated, while operating with the defined workload tables and maintaining the resource reserves specified in Computer Resources.	3.1.10	3.1.10.13 The system must [STARS-143] automatically initiate transfer of data block information to the receiving controller, either intra- or inter-facility, when site adaptable parameters are satisfied.
3.2.1.1.23.4.13	1	STARS-SSD-01310	Processing and display required for interfacility messages shall[1] be accomplished within 1.2 seconds of message receipt, while operating with the defined workload tables and maintaining the resource reserves specified in Computer Resources.	(Derived)	(Derived)
3.2.1.1.23.4.15	1	STARS-SSD-01311	PV shall[1] be completed within 45 minutes of initiation, while operating with the defined workload tables and maintaining the resource reserves specified in Computer Resources.	7.1.1.4	7.1.1.4 STARS Test Program must [STARS-534] ensure that the functional and performance requirements have been met in an operational environment in accordance with FAA-E-2904 STARS System Specification Document (SSD).
3.2.1.1.23.4.16	1	STARS-SSD-01312	The map data display update rate shall[1] be 1000 lines, 200 symbols, 75 arcs and 75 circles per second, while operating with the defined workload tables and maintaining the resource reserves specified in Computer Resources.	3.1.10	3.1.10.14 The system must [STARS-144] display geographic digital maps.
3.2.1.1.23.4.17	1	STARS-SSD-01313	Any change to the weather map shall[1] be displayed at the TCP in 30 seconds or less, while operating with the defined workload tables and maintaining the resource reserves specified in Computer Resources.	3.1.10	3.1.10.16 The system must [STARS-146] display weather data.
3.2.1.1.23.4.18	1	STARS-SSD-01314	The change of display between FS and ES shall[1] occur in 1 second or less after the change is initiated by a TCP, while operating with the defined workload tables and maintaining the resource reserves specified in Computer Resources.	3.2.2	3.2.2.4 The system must [STARS-224] switch from FSL to EFSL in no more than 1 second.

3.2.1.1.23.4.19	1	STARS-SSD-01315	Switching the resource state of redundant resources shall[1] be accomplished in 5 seconds or less, while operating with the defined workload tables.	3.3.2	3.3.2.1 The system design must [STARS-321] preclude single point failures, excluding TCWs, MCWs, and TDWs. 3.3.2.2 Full Service availability must [STARS-322] be no less than .999995. 3.3.2.3 Emergency Full Service availability must [STARS-323] be no less than .999995.
3.2.1.1.23.4.20	1	STARS-SSD-01316	Switching the execution of one version of automation application software to another version shall[1] take no more than 45 seconds, while operating with the defined workload tables.	3.3.2	3.3.2.1 The system design must [STARS-321] preclude single point failures, excluding TCWs, MCWs, and TDWs. 3.3.2.2 Full Service availability must [STARS-322] be no less than .999995. 3.3.2.3 Emergency Full Service availability must [STARS-323] be no less than .999995.
3.2.1.1.23.4.21	1	STARS-SSD-01317	Switching from one site adaptation set to another **shall[1]** take no more than 10 seconds, while operating with the defined workload tables.	3.3.2	3.3.2.1 The system design must [STARS-321] preclude single point failures, excluding TCWs, MCWs, and TDWs. 3.3.2.2 Full Service availability must [STARS-322] be no less than .999995. 3.3.2.3 Emergency Full Service availability must [STARS-323] be no less than .999995.
3.2.1.1.23.4.22	1	STARS-SSD-01318	Initialization or restore/recovery from power failure to FSL shall[1] be accomplished in 6 minutes or less, while operating with the defined workload tables.	3.2.1	3.2.2.1 The system must [STARS-221] recover from a power reset to Full Service in no more than 6 minutes.
3.2.1.1.23.4.24	1	STARS-SSD-01319	From the time a redundant system resource fails, recovery to the service level in use at the time of the failure shall[1] be accomplished in 5 seconds or less, while operating with the defined workload tables.	3.3.2	3.3.2.1 The system design must [STARS-321] preclude single point failures, excluding TCWs, MCWs, and TDWs. 3.3.2.2 Full Service availability must [STARS-322] be no less than .999995. 3.3.2.3 Emergency Full Service availability must [STARS-323] be no less than .999995.

3.2.1.1.23.4.25	1	STARS-SSD-01320	The transmission from STARS of System Track Data shall[1] begin within 2.0 seconds of Multi-Radar Tracker output.	(Derived)	(Derived)
3.2.1.1.23.4.25	2	STARS-SSD-01321	The transmission from STARS of a message containing a flight plan update shall[2] begin within 2.0 seconds of the following: a. Receipt of an external message causing a flight plan update b. Command causing a flight update from a local workstation c. Command causing a flight update from a remote workstation with the added GFE communication time taken into account.	3.1.7	3.1.7.1 The system must [STARS-081] receive and transmit NAS Flight Plan information between STARS and an Air Route Traffic Control Center (ARTCC).
3.2.1.1.23.4.25	3	STARS-SSD-01322	The system shall[3] make altimeter settings available to air traffic functions, verified by observation of the system status area or altimeter list, within 5 seconds of receipt at the ABPE interface.	3.1.2	3.1.2.6 The system must [STARS-016] provide for automatic entry of Altimeter data for the calculation of aircraft altitude information. 3.1.2.7 The system must [STARS-017] provide for manual override entry of Altimeter data for the calculation of aircraft altitude information.
3.2.1.1.23.4.26	1	STARS-SSD-01323	Processing and display required for FDIO messages shall[1] be accomplished within 1.2 seconds of message receipt, while operating with the defined workload tables. (STARS LITE only)	3.1.7	3.1.7.2 The system must [STARS-082] process Arrival, Departure, and Overflight Flight Plans generated internally by an adjacent Terminal facility. 3.1.7.3 The system must [STARS-083] process Arrival, Departure, and Overflight Flight Plans generated internally by an ARTCC. 3.1.7.4 The system must [STARS-084] initiate and accept manual handoffs of flights between itself and an ARTCC.
3.2.1.1.23.5.1	1	STARS-SSD-01324	Excluding external surveillance errors, the displayed relative target position accuracy of single sensor slant range presentation or fused-track display of non-maneuvering targets, including all surveillance processing and display errors shall[1] be within the greater of 0.125 nmi or 0.4% of range scale.	3.2.9	3.2.9.1 Portrayal of the relative position of aircraft on the display must [STARS-301] achieve an accuracy of less than or equal to 0.125 nautical miles or less than or equal to 0.4 percent of range scale.

3.2.1.1.23.5.1	2	STARS-SSD-01325	Positional quantization of displayed target position shall[2] be less than 32 feet.	3.2.9	3.2.9.1 Portrayal of the relative position of aircraft on the display must [STARS-301] achieve an accuracy of less than or equal to 0.125 nautical miles or less than or equal to 0.4 percent of range scale.
3.2.1.1.23.5.1	3	STARS-SSD-01326	In FMA mode with ground range view selected, target reports having the same coordinates as the FMA map elements, shall[3] be displayed such that the center of the displayed symbol is within 100 feet of the corresponding elements.	3.1.10	3.1.10.28 The system must [STARS-158] generate FMA visual alerts.
3.2.1.1.23.5.2	1	STARS-SSD-01327	Tracking performance shall[1] conform to the requirements and applicable Notes specified in the following tables: [TABLES EMBEDDED]	3.2.9	3.2.9.1 Portrayal of the relative position of aircraft on the display must [STARS-301] achieve an accuracy of less than or equal to 0.125 nautical miles or less than or equal to 0.4 percent of range scale.
3.2.1.1.23.5.3	1	STARS-SSD-01328	Conflict Alert performance shall[1] conform to the requirements specified in Table 3.2.1.1.23-22, with a nuisance alert rate of less than or equal to 6%, using surveillance sensor inputs with the characteristics specified in Table 3.2.1.1.23-9.	3.1.3	3.1.3.8 The system must [STARS-038] display and store messages for each CA alert.
3.2.1.1.23.5.3	2	STARS-SSD-01329	The system shall[2] meet CA performance requirements for up to 100 simultaneous conflict situations.	3.1.3	3.1.3.1 The system must [STARS-031] detect unsafe proximity between tracked aircraft pairs regardless of sensor origin.
3.2.1.1.23.5.4	1	STARS-SSD-01330	FMA mode shall[1] support simultaneous approach operations on two to four parallel runways in the selected AMZ.	3.1.4	3.1.4.1 The system must [STARS-051] detect unsafe proximity between tracked aircraft pairs while on simultaneous approaches when using FMA.
3.2.1.1.23.5.4.2	1	STARS-SSD-01331	FMA mode shall[1] support approach operations for up to 150 associated aircraft in the selected AMZ, subject to the limitation on unique associated tracked aircraft expressed in Table 3.2.1.1.23-3.	3.1.4	3.1.4.1 The system must [STARS-051] detect unsafe proximity between tracked aircraft pairs while on simultaneous approaches when using FMA.
3.2.1.1.23.5.4.3	1	STARS-SSD-01332	FMA mode shall[1] support detection of target deviations of 100 feet in range or in azimuth within 10.7 nmi of the selected radar, as determined by observation of displayed target position relative to the reference lines specified in 3.2.1.1.4.1.	3.1.4	3.1.4.1 The system must [STARS-051] detect unsafe proximity between tracked aircraft pairs while on simultaneous approaches when using FMA.
3.2.1.1.23.5.4.3	2	STARS-SSD-01333	FMA mode, when a multilateration sensor has been selected and in ground range view, shall[2] support detection of a change in target position of 100 feet within the specified sensor coverage volume, as determined by observation of displayed target position relative to a fixed location on the display.	3.1.4	3.1.4.1 The system must [STARS-051] detect unsafe proximity between tracked aircraft pairs while on simultaneous approaches when using FMA.

3.2.1.1.23.5.4.4	1	STARS-SSD-01334	The audio signal associated with FMA Voice Alerts driving the speaker at the TCW shall[1] occur within 200 milliseconds after the alert becomes active.	3.1.10	3.1.10.29 The system must [STARS-159] generate FMA aural alerts.
3.2.1.1.23.5.4.5	1	STARS-SSD-01335	A visual Caution or Warning alert resulting from a track entering an NTZ shall[1] be displayed within 100 milliseconds of the track display position update.	3.1.10	3.1.10.28 The system must [STARS-158] generate FMA visual alerts.
3.2.1.1.23.5.4.6	1	STARS-SSD-01336	The change of display to FMA mode shall[1] occur in one minute or less, while operating with the defined workload tables (excluding flight data) and maintaining the resource reserves specified in Computer Resources.	3.1.10	3.1.10.28 The system must [STARS-158] generate FMA visual alerts.
3.2.1.1.23.5.5	1	STARS-SSD-01337	Minimum Safe Altitude Warning performance shall[1] conform to the requirements specified in the following table with a nuisance alert rate of less than or equal to 4%, using surveillance sensor inputs with the characteristics specified in Table 3.2.1.1.23-9.	3.1.10	3.1.10.33 The system must [STARS-163] generate MSAW visual alerts. 3.1.10.34 The system must [STARS-164] generate MSAW aural alarms.
3.2.1.1.23.5.6	1	STARS-SSD-01338	CRDA shall[1] operate on a total of 32 applications for an airport.	3.1.5	3.1.5.2 The system must [STARS-062] enable and disable Converging Runway Display Aid (CRDA) processing for aircraft on approach to a pair of converging runways based on adaptation.
3.2.1.1.23.5.7	1	STARS-SSD-01339	The time associated with all recorded data shall[1] be synchronized to within 100 msec of the ITS time.	3.1.11	3.1.11.5 All recorded data must [STARS-175] be time stamped and synchronized to a calibrated national standard time source.
3.2.1.1.23.5.8	1	STARS-SSD-01340	TCP input to disable ATPA system-wide, disable ATPA Approach Volume system-wide, inhibit the display of ATPA Warning and Alert Cones for a display or a single track, inhibit the display of ATPA Monitor cones, or inhibit the display of In-Trail Distance shall[1] take effect without waiting for the track(s) to be updated.	3.1.2.10	3.1.2.10 The system must [STARS-020] provide tracking data for the Automatic Terminal Proximity Alert (ATPA).
3.2.1.2.1.1	1	STARS-SSD-01341	Aircraft position, weather, test, and status data shall[1] be accepted simultaneously from multiple surveillance systems.	3.1.1	3.1.1.1 The system must [STARS-001] accept aircraft position and weather data simultaneously from multiple surveillance systems within geographic areas defined by site adaptable (SA) parameters.
3.2.1.2.1.2	1	STARS-SSD-01342	Surveillance data shall[1] be accepted by both a primary interface and an identical backup automation system interface.	3.3.2	3.3.2.1 The system design must [STARS-321] preclude single point failures, excluding TCWs, MCWs, and TDWs.
3.2.1.2.1.2	2	STARS-SSD-01343	ESL Surveillance data shall[2] be automatically selected from either the primary interface or the identical backup interface for each surveillance system.	3.1.1	3.1.1.1 The system must [STARS-001] accept aircraft position and weather data simultaneously from multiple surveillance systems within geographic areas defined by site adaptable (SA) parameters.

3.2.1.2.1.3	1	STARS-SSD-01344	Beacon and search target data shall[1] be accepted.	3.1.1	3.1.1.2 The system must [STARS-002] process digital primary inputs from the FAA and DoD air traffic surveillance systems, if available. 3.1.1.3 The system must [STARS-003] process secondary inputs from the FAA and DoD air traffic surveillance systems.
3.2.1.2.1.4	1	STARS-SSD-01345	The corrected altitude (A) in units of 100 feet shall[1] be calculated using the formula [FORMULA EMBEDDED]	3.1.2	3.1.2.4 The system must [STARS-014] perform altitude tracking, using target reports from both single and multisensory surveillance systems.
3.2.1.2.1.4	2	STARS-SSD-01346	Validated Mode C altitude in beacon target reports below a transition altitude shall[2] be corrected for barometric variations from the standard mean sea level pressure of 29.92 inches of mercury.	3.1.2	3.1.2.4 The system must [STARS-014] perform altitude tracking, using target reports from both single and multisensory surveillance systems.
3.2.1.2.1.4	3	STARS-SSD-01347	The transition altitude shall[3] be determined using an adaptable reference transition altitude, the altimeter setting, and the following: [TABLE EMBEDDED]	3.1.2	3.1.2.4 The system must [STARS-014] perform altitude tracking, using target reports from both single and multisensory surveillance systems.
3.2.1.2.1.4	4	STARS-SSD-01348	If use of the transition altitude table is adapted, the transition altitude shall[4] be determined using an adaptable reference transition altitude, the altimeter setting, and the following: [TABLE EMBEDDED]	3.1.2	3.1.2.4 The system must [STARS-014] perform altitude tracking, using target reports from both single and multisensory surveillance systems.
3.2.1.2.1.4	5	STARS-SSD-01349	If use of the transition altitude formula is adapted, the transition altitude (At) in units of 100 feet shall[5] be calculated using an adaptable reference transition altitude (Aref), the altimeter setting, and the formula: [FORMULA EMBEDDED]	3.1.2	3.1.2.4 The system must [STARS-014] perform altitude tracking, using target reports from both single and multisensory surveillance systems.
3.2.1.2.1.5	1	STARS-SSD-01350	Weather data shall[1] be made available for display.	3.1.10	3.1.10.16 The system must [STARS-146] display weather data.
3.2.1.2.1.5	2	STARS-SSD-01351	The ASR and ARSR weather levels shall[2] be mapped to the displayable weather levels according to the following table: [TABLE EMBEDDED]	3.1.10	3.1.10.17 The system must [STARS-147] allow weather intensity to be selectable at the TCP for the 6 available processed weather levels.
3.2.1.2.1.5	3	STARS-SSD-01352	When adapted for high azimuth spacing, ARSR weather picture extraction processing shall[3] apply the angular values to radial reports listed in the following table: [TABLE EMBEDDED]	3.1.10	3.1.10.16 The system must [STARS-146] display weather data.
3.2.1.2.1.5	4	STARS-SSD-01353	When adapted for low azimuth spacing, ARSR weather picture extraction processing shall[4] apply the angular values to radial reports listed in the following table: [TABLE EMBEDDED]	3.1.10	3.1.10.16 The system must [STARS-146] display weather data.
3.2.1.2.1.5	5	STARS-SSD-01354	The system shall[5] apply an aging time to weather reports from ARSR radars.	3.1.10	3.1.10.16 The system must [STARS-146] display weather data.

3.2.1.2.1.6	1	STARS-SSD-01355	Beacon and search strobe data shall[1] be accepted and discarded.	3.1.1	3.1.1.2 The system must [STARS-002] process digital primary inputs from the FAA and DoD air traffic surveillance systems, if available. 3.1.1.3 The system must [STARS-003] process secondary inputs from the FAA and DoD air traffic surveillance systems.
3.2.1.2.1.7	1	STARS-SSD-01356	Beacon and search RTQC messages including sector marks, if available, from all surveillance systems, shall[1] be made available for system status monitoring at the MCP.	3.1.1 9.2.4	3.1.1.2 The system must [STARS-002] process digital primary inputs from the FAA and DoD air traffic surveillance systems, if available. 3.1.1.3 The system must [STARS-003] process secondary inputs from the FAA and DoD air traffic surveillance systems. 9.2.4.1 STARS must [STARS-661] continuously monitor, log, and record the health of STARS including telecommunications, components, external interfaces, and system services.
3.2.1.2.1.7	2	STARS-SSD-01357	Beacon and search RTQC messages excluding sector marks shall[2] be made available for display.	3.1.10 9.2.4	3.1.10.7 The system must [STARS-137] display a target indicator at the position of each surveillance target received in single sensor mode. 9.2.4.1 STARS must [STARS-661] continuously monitor, log, and record the health of STARS including telecommunications, components, external interfaces, and system services.
3.2.1.2.1.8	1	STARS-SSD-01358	Radar status messages and radar identification messages from all surveillance systems shall[1] be made available for system status monitoring at the MCP.	3.1.10 9.2.4	3.1.10.3 The system must [STARS-133] based upon adaptation, display the general status of the system at each TCP. 9.2.4.1 STARS must [STARS-661] continuously monitor, log, and record the health of STARS including telecommunications, components, external interfaces, and system services.

3.2.1.2.1.9	1	STARS-SSD-01359	Source data for pressure corrections shall[1] be the altimeter setting at the TCW/TDW.	3.1.2	3.1.2.6 The system must [STARS-016] provide for automatic entry of Altimeter data for the calculation of aircraft altitude information. 3.1.2.7 The system must [STARS-017] provide for manual override entry of Altimeter data for the calculation of aircraft altitude information.
3.2.1.2.1.10	1	STARS-SSD-01360	Uncorrelated search reports from an ASR-9 or an ASR-11 radar shall[1] be discarded if they do not exceed the quality filter threshold (if any) adapted for that radar.	3.1.1	3.1.1.2 The system must [STARS-002] process digital primary inputs from the FAA and DoD air traffic surveillance systems, if available.
3.2.1.2.1.11	1	STARS-SSD-01361	Uncorrelated search reports from an ASR-9 radar shall[1] be discarded if they match the confidence filter code (if adapted) for that radar.	3.1.1	3.1.1.2 The system must [STARS-002] process digital primary inputs from the FAA and DoD air traffic surveillance systems, if available.
3.2.1.2.1.12	1	STARS-SSD-01362	Permanent echo search targets shall[1] be detected and made available for display.	3.1.1 3.1.10	3.1.1.2 The system must [STARS-002] process digital primary inputs from the FAA and DoD air traffic surveillance systems, if available. 3.1.10.7 The system must [STARS-137] display a target indicator at the position of each surveillance target received in single sensor mode. 3.1.10.8 The system must [STARS-138] display a target indicator at the composite position of each surveillance target received in multi-sensor and Fusion modes.
3.2.1.2.1.13	1	STARS-SSD-01363	Fixed beacon transponder targets shall[1] be detected and made available for display.	3.1.1 3.1.10	3.1.1.3 The system must [STARS-003] process secondary inputs from the FAA and DoD air traffic surveillance systems. 3.1.10.7 The system must [STARS-137] display a target indicator at the position of each surveillance target received in single sensor mode. 3.1.10.8 The system must [STARS-138] display a target indicator at the composite position of each surveillance target received in multi-sensor and Fusion modes.

3.2.1.2.1.14	1	STARS-SSD-01364	Test targets from surveillance systems shall[1] be made available for display.	3.1.10	3.1.10.7 The system must [STARS-137] display a target indicator at the position of each surveillance target received in single sensor mode. 3.1.10.8 The system must [STARS-138] display a target indicator at the composite position of each surveillance target received in multi-sensor and Fusion modes.
3.2.1.2.1.15	1	STARS-SSD-01365	Reports from aircraft targets containing any valid Mode C value of -1000 ft or less shall[1] be processed as if they contained an invalid Mode C value.	3.1.2	3.1.2.4 The system must [STARS-014] perform altitude tracking, using target reports from both single and multisensory surveillance systems.
3.2.1.2.2.1	1	STARS-SSD-01366	TCP input shall[1] select the single radar source for display presentation at each local TDW from the digital surveillance interface.	3.1.10	3.1.10.21 Each TCW must [STARS-151] have selectable presentation modes. 3.1.10.22 Each TCW must [STARS-152] have a single sensor slant range display presentation mode. 3.1.10.23 Each TCW must [STARS-153] have a single sensor ground plane display presentation mode.
3.2.1.2.2.2	1	STARS-SSD-01367	TCP input at each remote TDW shall[1] select the single radar source from either a direct radar interface or from the ESL automation subsystem interface for display.	3.1.10	3.1.10.21 Each TCW must [STARS-151] have selectable presentation modes. 3.1.10.22 Each TCW must [STARS-152] have a single sensor slant range display presentation mode. 3.1.10.23 Each TCW must [STARS-153] have a single sensor ground plane display presentation mode.
3.2.1.2.2.3	1	STARS-SSD-01368	TCP input shall[1] select up to ten (10) beacon code blocks to be used at each TCW and TDW.	3.1.9 3.1.10	3.1.9.4 The system must [STARS-114] provide the controller with control over flight plan information. 3.1.10.11 The system must [STARS-141] display aircraft information in the form of data blocks.
3.2.1.2.2.3	2	STARS-SSD-01369	TCP input via keyboard command sequence [F7, B, code (00-77), Enter] or [M, F7, B, code (00-77), Enter] shall[2] enter or delete, respectively, the specified codes from the Select Code List.	3.1.9	3.1.9.4 The system must [STARS-114] provide the controller with control over flight plan information.
3.2.1.2.2.4	1	STARS-SSD-01370	TCP input shall[1] control the limits of the altitude filter at each TCW and TDW.	3.1.9	3.1.9.6 The system must [STARS-116] allow for the control of global system information.

3.2.1.2.2.4	2	STARS-SSD-01371	TCP input via keyboard command sequence [F7, F, unassociated track altitude limits (6 digits), {Space, associated track altitude limits (6 digits)}, Enter] shall[2] enter Altitude Filter Limits.	3.1.9	3.1.9.6 The system must [STARS-116] allow for the control of global system information.
3.2.1.2.2.4	3	STARS-SSD-01372	ESL shall[3] use the lowest of the low, and the highest of the high, altitude filter limits from the unassociated and associated limits.	3.1.2	3.1.2.4 The system must [STARS-014] perform altitude tracking, using target reports from both single and multisensory surveillance systems.
3.2.1.2.2.4	4	STARS-SSD-01373	TCP input via keyboard command sequence [F7, F, Enter] shall[4] display the altitude filter readout in the Preview Area.	3.1.9 3.1.10	3.1.9.6 The system must [STARS-116] allow for the control of global system information. 3.1.10.3 The system must [STARS-133] based upon adaptation, display the general status of the system at each TCP.
3.2.1.2.2.5	1	STARS-SSD-01374	TCP input shall[1] select a display range from 6 nmi to the maximum coverage area without modifying character size or line width.	3.1.9 3.1.10	3.1.9.1 The system must [STARS-111] change the range scale on a display via keyboard entry. 3.1.9.2 The system must [STARS-112] change the range scale on a display via a range knob. 3.1.10.15 The system must [STARS-145] display range marks.
3.2.1.2.2.6	1	STARS-SSD-01375	TCP input shall[1] specify the barometric setting for the TCW/TDW.	3.1.9 3.1.10	3.1.9.6 The system must [STARS-116] allow for the control of global system information. 3.1.10.3 The system must [STARS-133] based upon adaptation, display the general status of the system at each TCP.
3.2.1.2.2.7	1	STARS-SSD-01376	TCP input shall[1] select and inhibit the display of uncorrelated search targets.	3.1.9	3.1.9.5 The system must [STARS-115] provide a controller with the ability to manipulate the presentation of information on an individual situation display.
3.2.1.2.2.7	2	STARS-SSD-01377	TCP input shall[2] select and inhibit the display of mapped uncorrelated search targets.	3.1.9	3.1.9.5 The system must [STARS-115] provide a controller with the ability to manipulate the presentation of information on an individual situation display.
3.2.1.2.2.7	3	STARS-SSD-01378	Selection of either uncorrelated search target display presentation shall[3] cause deselection of the other.	3.1.9	3.1.9.5 The system must [STARS-115] provide a controller with the ability to manipulate the presentation of information on an individual situation display.

3.2.1.2.2.8	1	STARS-SSD-01379	TCP input via keyboard command sequence [F7, S, Slew, Enter] shall[1] position the upper left corner of the System Status Area anywhere within the Radar Window.	3.1.9 3.1.10	3.1.9.6 The system must [STARS-116] allow for the control of global system information. 3.1.10.3 The system must [STARS-133] based upon adaptation, display the general status of the system at each TCP.
3.2.1.2.2.9	1	STARS-SSD-01380	TCP input via keyboard command sequence [F7, P, Slew, Enter] shall[1] position the upper left corner of the Preview Area anywhere within the Radar Window.	3.1.9	3.1.9.5 The system must [STARS-115] provide a controller with the ability to manipulate the presentation of information on an individual situation display.
3.2.1.2.2.9	2	STARS-SSD-01381	At a minimum, four characters of any displayed preview area line shall[2] be visible when the preview area is positioned near the right edge of the radar window.	3.1.10	3.1.10.2 The system must [STARS-132], based upon adaptation, display general information for the facility at each TCP.
3.2.1.2.2.9	3	STARS-SSD-01382	At a minimum, three lines of any preview area data shall[3] be visible when the preview area is positioned near the bottom edge of the radar window.	3.1.10	3.1.10.2 The system must [STARS-132], based upon adaptation, display general information for the facility at each TCP.
3.2.1.2.2.10	1	STARS-SSD-01383	TCP input via keyboard command sequence [F7, S, altimeter setting (2700-3200), Enter] shall[1] enter altimeter setting, if inches of mercury pressure is adapted.	3.1.2	3.1.2.7 The system must [STARS-017] provide for manual override entry of Altimeter data for the calculation of aircraft altitude information.
3.2.1.2.2.10	2	STARS-SSD-01384	TCP input via keyboard command sequence [F7, S, altimeter setting (915-1083), Enter] shall[2] enter altimeter setting, if millibar pressure is adapted.	3.1.2	3.1.2.7 The system must [STARS-017] provide for manual override entry of Altimeter data for the calculation of aircraft altitude information.
3.2.1.2.2.11	1	STARS-SSD-01385	TCP input via keyboard command sequence [Slew, Enter] shall[1] override the code and altitude filters and display code and altitude of the selected target.	3.1.9	3.1.9.3 The system must [STARS-113] provide for controller manipulation of tracked aircraft status.
3.2.1.2.2.11	2	STARS-SSD-01386	The code and altitude of the selected target shall[2] remain displayed for an adapted time interval of 1-30 seconds (default 5 seconds).	3.1.9 3.1.10	3.1.9.3 The system must [STARS-113] provide for controller manipulation of tracked aircraft status. 3.1.10.11 The system must [STARS-141] display aircraft information in the form of data blocks.
3.2.1.2.2.12	1	STARS-SSD-01387	There shall[1] be one active cursor for each data entry set.	3.1.9	3.1.9.6 The system must [STARS-116] allow for the control of global system information. 3.1.9.7 The system must [STARS-117] allow for the use of context sensitive (implied) functions and user actions.

3.2.1.2.2.13	1	STARS-SSD-01388	TCP input via keyboard command sequence [ACID, Slew, Enter] or [ACID, space, beacon code, Enter] shall[1] associate an ACID with a discrete beacon code at the entering TCW/TDW. Code/call sign pairing information will not be transferred between workstations.	3.1.9	3.1.9.3 The system must [STARS-113] provide for controller manipulation of tracked aircraft status.
3.2.1.2.2.13	2	STARS-SSD-01389	If an attempt is made to associate an ACID with a non-discrete beacon code, an error message shall[2] be displayed in the Preview Area.	3.1.9 3.1.10	3.1.9.3 The system must [STARS-113] provide for controller manipulation of tracked aircraft status. 3.1.10.5 The system must [STARS-135] provide a message response area at each TCP.
3.2.1.2.2.13	3	STARS-SSD-01390	TCP input via keyboard command sequence [TRK DROP (F4), Slew, Enter] or [TRK DROP (F4), ACID, Enter] shall[3] delete the ACID from the data block.	3.1.9	3.1.9.3 The system must [STARS-113] provide for controller manipulation of tracked aircraft status.
3.2.1.2.2.13	4	STARS-SSD-01391	If the discrete code is not received for an adaptable period of time, the ACID shall[4] be deleted from storage.	3.1.9	3.1.9.3 The system must [STARS-113] provide for controller manipulation of tracked aircraft status.
3.2.1.2.2.13	5	STARS-SSD-01392	If the ACID is not associated with a discrete code for an adaptable period of time, the ACID shall[5] be deleted from storage. Code/call sign pairing information will not be transferred between workstations.	3.1.7	3.1.9.3 The system must [STARS-113] provide for controller manipulation of tracked aircraft status.
3.2.1.2.2.14	1	STARS-SSD-01393	TCP input via keyboard command sequence [F7, B, Slew, and Enter] shall[1] readout the beacon code in the Preview Area.	3.1.9 3.1.10	3.1.9.3 The system must [STARS-113] provide for controller manipulation of tracked aircraft status. 3.1.10.5 The system must [STARS-135] provide a message response area at each TCP. 3.1.10.9 The system must [STARS-139] display aircraft status at each TCP.
3.2.1.2.2.15	1	STARS-SSD-01394	TCP input via keyboard command sequence [F7, B, Enter] shall[1] toggle the beacon readout all function.	3.1.9	3.1.9.3 The system must [STARS-113] provide for controller manipulation of tracked aircraft status.
3.2.1.2.2.15	2	STARS-SSD-01395	TCP input via keyboard command sequence [F7, B, E, Enter] shall[2] display the beacon codes for all targets.	3.1.9	3.1.9.3 The system must [STARS-113] provide for controller manipulation of tracked aircraft status. 3.1.10.9 The system must [STARS-139] display aircraft status at each TCP.

3.2.1.2.2.15	3	STARS-SSD-01396	TCP input via keyboard command sequence [F7, B, 1, Enter] shall[3] disable the display of beacon codes for all targets.	3.1.9	3.1.9.3 The system must [STARS-113] provide for controller manipulation of tracked aircraft status. 3.1.10.9 The system must [STARS-139] display aircraft status at each TCP.
3.2.1.2.3.1	1	STARS-SSD-01397	The service levels available to be displayed at any TCP shall[1] be indicated on the corresponding TCW or TDW.	3.1.10	3.1.10.2 The system must [STARS-132], based upon adaptation, display general information for the facility at each TCP.
3.2.1.2.3.1	2	STARS-SSD-01398	Service Level Availability shall[2] be derived from FSL/ESL status.	3.1.10	3.1.10.3 The system must [STARS-133] based upon adaptation, display the general status of the system at each TCP.
3.2.1.2.3.2	1	STARS-SSD-01399	Radar presentation shall[1] be single sensor slant range.	3.1.10	3.1.10.22 Each TCW must [STARS-152] have a single sensor slant range display presentation mode.
3.2.1.2.3.3	1	STARS-SSD-01400	All target data and map data shall[1] be displayed in radar coordinates. This causes the target and map data to be scaled as a function of selected range.	3.1.10	3.1.10.7 The system must [STARS-137] display a target indicator at the position of each surveillance target received in single sensor mode. 3.1.10.8 The system must [STARS-138] display a target indicator at the composite position of each surveillance target received in multi-sensor and Fusion modes. 3.1.10.14 The system must [STARS-144] display geographic digital maps. 3.1.10.15 The system must [STARS-145] display range marks.
3.2.1.2.3.4	1	STARS-SSD-01401	The selected radar source shall[1] be identified in ESL display.	3.1.10	3.1.10.3 The system must [STARS-133] based upon adaptation, display the general status of the system at each TCP.
3.2.1.2.3.5	1	STARS-SSD-01402	The ACID shall[1] be displayed in place of the discrete beacon code in the first line of the data block independent of both the select code filter and the altitude filter limits	3.1.10	3.1.10.11 The system must [STARS-141] display aircraft information in the form of data blocks.
3.2.1.2.3.5	2	STARS-SSD-01403	The ACID shall[2] be displayed in the data block for all aircraft that are transponding the discrete code.	3.1.10	3.1.10.11 The system must [STARS-141] display aircraft information in the form of data blocks.
3.2.1.2.3.5	3	STARS-SSD-01404	If an ACID is displayed in place of a discrete code and the discrete code is changed to a special condition code, as defined in 3.2.1.2.3.17, the ACID shall[3] continue to be displayed.	3.1.10	3.1.10.11 The system must [STARS-141] display aircraft information in the form of data blocks.

3.2.1.2.3.5	4	STARS-SSD-01405	When the applicable filter criteria are satisfied, target beacon code or ACID and altitude, barometric pressure corrected when less than the transition altitude, shall[4] be displayed at the end of a target leader for targets reporting these values.	3.1.10	3.1.10.11 The system must [STARS-141] display aircraft information in the form of data blocks.
3.2.1.2.3.5	5	STARS-SSD-01406	If a discrete code is changed to a special condition code and the ACID continues to be displayed, a special condition indicator shall[5] be uniquely displayed above the ACID until the special condition code is no longer received from that aircraft.	3.1.10	3.1.10.11 The system must [STARS-141] display aircraft information in the form of data blocks.
3.2.1.2.3.6	1	STARS-SSD-01407	Aircraft information for targets with beacon codes that correspond to up to ten (10) beacon code blocks shall[1] be displayed.	3.1.10	3.1.10.11 The system must [STARS-141] display aircraft information in the form of data blocks.
3.2.1.2.3.7	1	STARS-SSD-01408	Aircraft information for beacon code-selected targets that are between altitude filter limits shall[1] be displayed.	3.1.10	3.1.10.11 The system must [STARS-141] display aircraft information in the form of data blocks.
3.2.1.2.3.8	1	STARS-SSD-01409	A minimum of 50 digital maps associated with the radar source shall[1] be displayed individually or simultaneously at the TCW and TDW as constrained by the geographic map capacities specified in the data display workload Table 3.2.1.2.10-7.	3.1.10	3.1.10.14 The system must [STARS-144] display geographic digital maps.
3.2.1.2.3.9	1	STARS-SSD-01410	All lists and tabular data shall[1] be displayed in display coordinates.	(Derived)	(Derived)
3.2.1.2.3.10	1	STARS-SSD-01411	In ESL, all data fields shall[1] be derived from ESL, including existing ESL time.	3.1.10	3.1.10.3 The system must [STARS-133] based upon adaptation, display the general status of the system at each TCP.
3.2.1.2.3.10	2	STARS-SSD-01412	When a TCW or TDW is in ESL Training mode, ESL simulator time shall[2] be displayed.	3.1.10	3.1.10.3 The system must [STARS-133] based upon adaptation, display the general status of the system at each TCP.
3.2.1.2.3.10	3	STARS-SSD-01413	General Information, OPS Level, and Other data fields do not exist in ESL and shall[3] be blank.	3.1.10	3.1.10.3 The system must [STARS-133] based upon adaptation, display the general status of the system at each TCP.
3.2.1.2.3.10	4	STARS-SSD-01414	In ESL, data for the Attention field shall[4] be derived from the selected radar.	3.1.10	3.1.10.3 The system must [STARS-133] based upon adaptation, display the general status of the system at each TCP.
3.2.1.2.3.10	5	STARS-SSD-01415	A single System Status Area shall[5] be displayed.	3.1.10	3.1.10.3 The system must [STARS-133] based upon adaptation, display the general status of the system at each TCP.
3.2.1.2.3.10	6	STARS-SSD-01416	The size of the System Status Area shall[6] be fixed for any given character size.	3.1.10	3.1.10.3 The system must [STARS-133] based upon adaptation, display the general status of the system at each TCP.

3.2.1.2.3.10	7	STARS-SSD-01417	The System Status Area size shall[7] automatically adjust if the character size is changed.	3.1.10	3.1.10.3 The system must [STARS-133] based upon adaptation, display the general status of the system at each TCP.
3.2.1.2.3.10	8	STARS-SSD-01418	Data for the weather level status shall[8] be derived from the radar currently selected at the TCW.	3.1.10	3.1.10.2 The system must [STARS-132], based upon adaptation, display general information for the facility at each TCP. 3.1.10.16 The system must [STARS-146] display weather data.
3.2.1.2.3.10	9	STARS-SSD-01419	The Weather Level Status field shall[9] display numbers in fixed horizontal positions corresponding to weather levels from which weather data is currently available and highlight with parentheses those letters that correspond to enabled weather levels.	3.1.10	3.1.10.2 The system must [STARS-132], based upon adaptation, display general information for the facility at each TCP. 3.1.10.16 The system must [STARS-146] display weather data.
3.2.1.2.3.10	10	STARS-SSD-01420	Data for the ASR-9 Mode status shall[10] be obtained from the radar currently selected at the TCW.	3.1.2	3.1.1.2 The system must [STARS-002] process digital primary inputs from the FAA and DoD air traffic surveillance systems, if available.
3.2.1.2.3.10	11	STARS-SSD-01421	The System Status Area shall[11] contain the following information fields: a. Service Level Availability b. ASR-9 mode ("Mode S" or "IBI") or blank per 3.2.1.2.3.10[12] c. Weather Level Status d. Time (hhmm/ss) e. Altimeter Setting (in millibars, if millibar pressure is adapted or in inches of mercury, if inches of mercury pressure is adapted) f. Beacon Filter Select Codes (maximum of 5 group codes per line; up to 2 lines) g. Attention (Special condition indication(s))	3.1.10	3.1.10.3 The system must [STARS-133] based upon adaptation, display the general status of the system at each TCP.
3.2.1.2.3.10	12	STARS-SSD-01422	The system data shall[12] display the ASR-9 Mode status only under all of the following conditions: a. An ASR-9 Mode S radar is selected for display b. Display of ASR-9 Mode status is enabled by adaptation for the terminal area.	3.1.10	3.1.10.3 The system must [STARS-133] based upon adaptation, display the general status of the system at each TCP.

3.2.1.2.3.10	13	STARS-SSD-01423	The format of the System Status Area shall[13] be as follows: RED CHECK SERV LVL AVL ASR-9 MODE WEATHER LVL STATUS TIME ALTIMETER BEACON FILTER CODES ATTENTION	3.1.10	3.1.10.3 The system must [STARS-133] based upon adaptation, display the general status of the system at each TCP.
3.2.1.2.3.10	14	STARS-SSD-01424	The system data shall[14] display a single Red Check symbol consisting of a solid red inverted delta centered within a green outline box. The Red Check symbol cannot be turned off; presence of the red inverted delta verifies that the red electron gun (or equivalent mechanism in LCD displays) is working. The Red Check symbol has the same brightness and font size as the remainder of the system status area.	3.1.10	3.1.10.3 The system must [STARS-133] based upon adaptation, display the general status of the system at each TCP.
3.2.1.2.3.11	1	STARS-SSD-01425	The LDR DIR toggle button shall[1] provide the capability to toggle the leader direction between North and Northeast directions.	3.1.9	3.1.9.5 The system must [STARS-115] provide a controller with the ability to manipulate the presentation of information on an individual situation display. 3.1.9.7 The system must [STARS-117] allow for the use of context sensitive (implied) functions and user actions.
3.2.1.2.3.12	1	STARS-SSD-01426	Upon TCP selection, the altitude filter limits shall[1] be displayed.	3.1.10	3.1.10.2 The system must [STARS-132], based upon adaptation, display general information for the facility at each TCP.
3.2.1.2.3.13	1	STARS-SSD-01427	Upon TCP selection, search targets reported as uncorrelated by the terminal radar shall[1] be displayed.	3.1.9 3.1.10	3.1.9.5 The system must [STARS-115] provide a controller with the ability to manipulate the presentation of information on an individual situation display. 3.1.10.7 The system must [STARS-137] display a target indicator at the position of each surveillance target received in single sensor mode. 3.1.10.8 The system must [STARS-138] display a target indicator at the composite position of each surveillance target received in multi-sensor and Fusion modes.

3.2.1.2.3.13	2	STARS-SSD-01428	No target histories shall[2] be displayed for search targets reported as uncorrelated by the terminal radar.	3.1.10	3.1.10.7 The system must [STARS-137] display a target indicator at the position of each surveillance target received in single sensor mode. 3.1.10.8 The system must [STARS-138] display a target indicator at the composite position of each surveillance target received in multi-sensor and Fusion modes.
3.2.1.2.3.14	1	STARS-SSD-01429	Upon TCP selection, search targets reported as uncorrelated by the terminal radar shall[1] be displayed only in adapted uncorrelated target map geographic areas.	3.1.9 3.1.10	3.1.9.5 The system must [STARS-115] provide a controller with the ability to manipulate the presentation of information on an individual situation display. 3.1.10.7 The system must [STARS-137] display a target indicator at the position of each surveillance target received in single sensor mode. 3.1.10.8 The system must [STARS-138] display a target indicator at the composite position of each surveillance target received in multi-sensor and Fusion modes.
3.2.1.2.3.15	1	STARS-SSD-01430	Correlated search target reports, if available from the radar, shall[1] be displayed in all display areas, irrespective of the Uncorrelated Search Target Display Selection.	3.1.10	3.1.10.7 The system must [STARS-137] display a target indicator at the position of each surveillance target received in single sensor mode. 3.1.10.8 The system must [STARS-138] display a target indicator at the composite position of each surveillance target received in multi-sensor and Fusion modes.
3.2.1.2.3.16	1	STARS-SSD-01431	Correlated search target reports, if available from the radar, shall[1] be displayed in all display areas, irrespective of the Uncorrelated Search Target Display Selection.	3.1.10	3.1.10.7 The system must [STARS-137] display a target indicator at the position of each surveillance target received in single sensor mode. 3.1.10.8 The system must [STARS-138] display a target indicator at the composite position of each surveillance target received in multi-sensor and Fusion modes.
3.2.1.2.3.17	1	STARS-SSD-01432	The TCW/TDW aural alarm shall[1] sound when viewing data from a sensor that is reporting a special condition (EM, HJ or RF).	3.1.10	3.1.10.25 The system must [STARS-155] generate visual alerts based upon the adaptation of each individual facility.

3.2.1.2.3.17	2	STARS-SSD-01433	The data block shall[2] uniquely indicate when an aircraft transponder is indicating the following conditions: a. emergency [EM 7700] b. hijack [HJ 7500] c. radio failure [RF 7600]	3.1.10	3.1.10.11 The system must [STARS-141] display aircraft information in the form of data blocks.
3.2.1.2.3.18	1	STARS-SSD-01434	TCP input shall[1] select and inhibit the display of parrots, permanent echoes, beacon and search RTQC targets, and surveillance systems search test targets on the entering TCW or TDW.	3.1.9	3.1.9.5 The system must [STARS-115] provide a controller with the ability to manipulate the presentation of information on an individual situation display.
3.2.1.2.3.19	1	STARS-SSD-01435	A separate Preview Area shall[1] be provided for each data entry set active at a workstation.	3.1.10	3.1.10.5 The system must [STARS-135] provide a message response area at each TCP.
3.2.1.2.3.19	2	STARS-SSD-01436	The Preview Area shall[2] display ESL data entry preview, readout, and feedback messages.	3.1.10	3.1.10.5 The system must [STARS-135] provide a message response area at each TCP.
3.2.1.2.3.19	3	STARS-SSD-01437	The size of the Preview Area shall[3] be fixed for any given character size.	3.1.10	3.1.10.5 The system must [STARS-135] provide a message response area at each TCP.
3.2.1.2.3.19	4	STARS-SSD-01438	The size of the Preview Area shall[4] automatically adjust if the character size is changed.	3.1.10	3.1.10.5 The system must [STARS-135] provide a message response area at each TCP.
3.2.1.2.3.19	5	STARS-SSD-01439	The Preview Area shall[5] consist of a Readout Area (RA) and a Preview Display Area (PDA).	3.1.10	3.1.10.5 The system must [STARS-135] provide a message response area at each TCP.
3.2.1.2.3.19	6	STARS-SSD-01440	The format of the Preview Area shall[6] be a two-line-readout area, followed by a data input area.	3.1.10	3.1.10.5 The system must [STARS-135] provide a message response area at each TCP.
3.2.1.2.3.19	7	STARS-SSD-01441	The Preview Area shall[7] contain the following associated with the ESL preview function: a. For the RA, data reflecting the results of a request from the keyboard or a trackball entry b. For the PDA, prompts for the following DCB functions when the DCB button is initiated: 1. Range 2. Range Ring 3. All brightness groups 4. Leader Length 5. Volume 6. History 7. Cursor Speed 8. Maps submenu 9. Character Size 10. Site	3.1.10	3.1.10.5 The system must [STARS-135] provide a message response area at each TCP.

3.2.1.2.3.20	1	STARS-SSD-01442	The data block shall[1] uniquely indicate when an aircraft transponder is received reporting one of the adapted transponder indicators, based upon a corresponding set of up to twelve adapted aircraft beacon codes, including suspect aircraft (beacon code 1236).	3.1.10	3.1.10.11 The system must [STARS-141] display aircraft information in the form of data blocks.
3.2.1.2.3.20	2	STARS-SSD-01443	The TCW and TDW aural alarm shall[2] sound when data from a sensor that is reporting an adapted transponder indicator is displayed and when the aural alarm is enabled by adaptation for that transponder indicator.	3.1.10	The system must [STARS-156] generate aural alarms based upon the adaptation of each individual TCP.
3.2.1.2.4.1.1	1	STARS-SSD-01444	When the ESL subsystem is in normal mode, and at least one CGW is On-line, hardware status information shall[1] be displayed at the MCP for each instance of ESL main and alternate SIO enclosures.	(Derived)	(Derived)
3.2.1.2.4.1.1	2	STARS-SSD-01445	Failure of any SIO module or associated serial channels shall[2] be detected automatically and result in visual and audible indications at the MCP.	3.1.10	3.1.10.25 The system must [STARS-155] generate visual alerts based upon the adaptation of each individual facility.
3.2.1.2.4.1.1	3	STARS-SSD-01446	When the ESL subsystem is in test mode, SIO enclosures shall[3] be excluded from monitoring.	3.1.1	3.1.1.2 The system must [STARS-002] process digital primary inputs from the FAA and DoD air traffic surveillance systems, if available. 3.1.1.3 The system must [STARS-003] process secondary inputs from the FAA and DoD air traffic surveillance systems.
3.2.1.2.4.1.2	1	STARS-SSD-01447	Status information shall[1] be displayed at the MCP for the hardware and application software associated with ESL CGWs.	(Derived)	(Derived)
3.2.1.2.4.1.2	2	STARS-SSD-01448	When a CGW has an On-line state, failure of any critical CGW hardware or software component shall[2] be detected automatically and result in visual and audible indications at the MCP.	3.1.10	3.1.10.25 The system must [STARS-155] generate visual alerts based upon the adaptation of each individual facility.
3.2.1.2.4.1.2	3	STARS-SSD-01449	Upon detection of a critical failure, a CGW shall[3] be automatically transitioned to an Off-line state.	3.3.2	3.3.2.1 The system design must [STARS-321] preclude single point failures, excluding TCWs, MCWs, and TDWs.
3.2.1.2.4.1.2	4	STARS-SSD-01450	CGW hardware and application software components shall[4] only be monitored when the CGW is in an On-line state.	(Derived)	(Derived)
3.2.1.2.4.1.3	1	STARS-SSD-01451	Status information shall[1] be displayed at the MCP for the hardware and application software associated with each ESL MCW.	(Derived)	(Derived)

3.2.1.2.4.1.3	2	STARS-SSD-01452	When an MCW has an On-line state, failure of any critical MCW hardware or application software component shall[2] be detected automatically and result in visual and audible indications at the MCP.	3.1.10	3.1.10.25 The system must [STARS-155] generate visual alerts based upon the adaptation of each individual facility.
3.2.1.2.4.1.3	3	STARS-SSD-01453	Upon detection of a critical failure, an MCW shall[3] be automatically transitioned to an Off-line state.	3.2.2	3.3.2.1 The system design must [STARS-321] preclude single point failures, excluding TCWs, MCWs, and TDWs.
3.2.1.2.4.1.3	4	STARS-SSD-01454	MCW hardware and application software components shall[4] only be monitored when the MCW is in an On-line state.	(Derived)	(Derived)
3.2.1.2.4.1.4	1	STARS-SSD-01455	Status information shall[1] be displayed at the MCP for the hardware and application software associated with each ESL TCW and TDW.	(Derived)	(Derived)
3.2.1.2.4.1.4	2	STARS-SSD-01456	When a TCW or TDW has an On-line state, failure of any critical TCW or TDW hardware or application software components shall[2] be detected automatically and result in visual and audible indications at the MCP.	3.1.10	3.1.10.25 The system must [STARS-155] generate visual alerts based upon the adaptation of each individual facility.
3.2.1.2.4.1.4	3	STARS-SSD-01457	TCW or TDW hardware and application software components shall[3] only be monitored when the TCW or TDW is in an On-line state.	(Derived)	(Derived)
3.2.1.2.4.1.4	4	STARS-SSD-01458	Upon detection of a critical failure, the TCW or TDW display shall[4] be frozen and display an informational message to the operator.	3.1.10	3.1.10.3 The system must [STARS-133] based upon adaptation, display the general status of the system at each TCP. 3.1.10.25 The system must [STARS-155] generate visual alerts based upon the adaptation of each individual facility.
3.2.1.2.4.1.4	5	STARS-SSD-01459	In the absence of a failure, when the ESL service level is unavailable, a TCW/TDW in Normal or Training mode shall[5] display a warning banner.	3.1.10	3.1.10.3 The system must [STARS-133] based upon adaptation, display the general status of the system at each TCP. 3.1.10.25 The system must [STARS-155] generate visual alerts based upon the adaptation of each individual facility.
3.2.1.2.4.1.5	1	STARS-SSD-01460	Status information shall[1] be displayed at the MCP for the hardware associated with the GPS time source interface into the ESL subsystem.	(Derived)	(Derived)

3.2.1.2.4.1.5	2	STARS-SSD-01461	When the GPS interface has an On-line state, failure of the GPS interface hardware shall[2] be detected automatically and result in visual and audible indications at the MCP.	3.1.10	3.1.10.25 The system must [STARS-155] generate visual alerts based upon the adaptation of each individual facility.
3.2.1.2.4.1.6.1	1	STARS-SSD-01462	When ESL is in normal mode, it shall[1] use the results of monitoring associated SIO serial channels to determine the feed status for each radar interface.	3.1.1	3.1.1.2 The system must [STARS-002] process digital primary inputs from the FAA and DoD air traffic surveillance systems, if available. 3.1.1.3 The system must [STARS-003] process secondary inputs from the FAA and DoD air traffic surveillance systems.
3.2.1.2.4.1.6.1	2	STARS-SSD-01463	When ESL is in normal mode and at least one CGW is On-line, status information shall[2] be displayed at the MCP for each radar interface.	(Derived)	(Derived)
3.2.1.2.4.1.6.1	3	STARS-SSD-01464	When ESL is in normal mode, for each radar interface, detailed status information shall[3] be displayed for radar feed status, and the results of monitoring PARROTs, permanent echoes, RTQC messages, Radar Status messages, and Radar Identification messages.	3.1.10	3.1.10.3 The system must [STARS-133] based upon adaptation, display the general status of the system at each TCP.
3.2.1.2.4.1.6.1	4	STARS-SSD-01465	When ESL is in test mode, it shall[4] monitor simulated radar interfaces.	3.1.1	3.1.1.2 The system must [STARS-002] process digital primary inputs from the FAA and DoD air traffic surveillance systems, if available. 3.1.1.3 The system must [STARS-003] process secondary inputs from the FAA and DoD air traffic surveillance systems.
3.2.1.2.4.1.6.1	5	STARS-SSD-01466	When ESL is in test mode, for each simulated radar interface, detailed status information shall[5] be displayed for the results of monitoring PARROTs, permanent echoes, and RTQC messages.	3.1.10	3.1.10.3 The system must [STARS-133] based upon adaptation, display the general status of the system at each TCP.
3.2.1.2.4.1.6.1	6	STARS-SSD-01467	When a radar interface has an On-line state, failure of any monitored components shall[6] be detected automatically and result in visual and audible indications at the MCP.	3.1.10	3.1.10.25 The system must [STARS-155] generate visual alerts based upon the adaptation of each individual facility.
3.2.1.2.4.1.6.1	7	STARS-SSD-01468	When all failures are resolved, the radar interface shall[7] automatically return to a Pass status.	3.1.1	3.1.1.2 The system must [STARS-002] process digital primary inputs from the FAA and DoD air traffic surveillance systems, if available. 3.1.1.3 The system must [STARS-003] process secondary inputs from the FAA and DoD air traffic surveillance systems.

3.2.1.2.4.1.6.2	1	STARS-SSD-01469	ESL shall[1] use the results of monitoring received status messages to determine the radar site resource status to be displayed at the MCP.	3.1.1	3.1.1.2 The system must [STARS-002] process digital primary inputs from the FAA and DoD air traffic surveillance systems, if available. 3.1.1.3 The system must [STARS-003] process secondary inputs from the FAA and DoD air traffic surveillance systems.
3.2.1.2.4.1.6.2	2	STARS-SSD-01470	Failure of any monitored radar site resource shall[2] be detected automatically and result in visual indications at the MCP.	3.1.1 3.1.10	3.1.1.2 The system must [STARS-002] process digital primary inputs from the FAA and DoD air traffic surveillance systems, if available. 3.1.1.3 The system must [STARS-003] process secondary inputs from the FAA and DoD air traffic surveillance systems. 3.1.10.25 The system must [STARS-155] generate visual alerts based upon the adaptation of each individual facility.
3.2.1.2.4.1.6.3	1	STARS-SSD-01471	Each radar interface shall[1] have an adapted radar interface identifier.	3.1.1	3.1.1.2 The system must [STARS-002] process digital primary inputs from the FAA and DoD air traffic surveillance systems, if available. 3.1.1.3 The system must [STARS-003] process secondary inputs from the FAA and DoD air traffic surveillance systems.
3.2.1.2.4.1.6.3	2	STARS-SSD-01472	ESL shall[2] use the results of monitoring received radar identification messages to determine the radar identification status to be displayed at the MCP.	3.1.1	3.1.1.2 The system must [STARS-002] process digital primary inputs from the FAA and DoD air traffic surveillance systems, if available. 3.1.1.3 The system must [STARS-003] process secondary inputs from the FAA and DoD air traffic surveillance systems.

3.2.1.2.4.1.6.3	3	STARS-SSD-01473	Failure of radar identification status shall[3] be detected automatically and result in visual and audible indications at the MCP.	3.1.1 3.1.10	3.1.1.2 The system must [STARS-002] process digital primary inputs from the FAA and DoD air traffic surveillance systems, if available. 3.1.1.3 The system must [STARS-003] process secondary inputs from the FAA and DoD air traffic surveillance systems. 3.1.10.25 The system must [STARS-155] generate visual alerts based upon the adaptation of each individual facility.
3.2.1.2.4.6.1.4	1	STARS-SSD-01474	ESL shall[1] monitor the presence and positional accuracy of beacon and search RTQC messages, including sector marks and test messages, in order to confirm the accuracy of received data.	3.1.1	3.1.1.2 The system must [STARS-002] process digital primary inputs from the FAA and DoD air traffic surveillance systems, if available. 3.1.1.3 The system must [STARS-003] process secondary inputs from the FAA and DoD air traffic surveillance systems.
3.2.1.2.4.6.1.4	2	STARS-SSD-01475	For each radar interface, adaptation shall[2] define the minimum and maximum number of beacon and search RTQC targets that can be received over an adaptable time period.	3.1.1	3.1.1.2 The system must [STARS-002] process digital primary inputs from the FAA and DoD air traffic surveillance systems, if available. 3.1.1.3 The system must [STARS-003] process secondary inputs from the FAA and DoD air traffic surveillance systems.
3.2.1.2.4.6.1.4	3	STARS-SSD-01476	For each radar interface, adaptation shall[3] define a range and azimuth location and positional tolerance for each search RTQC target.	3.1.1	3.1.1.2 The system must [STARS-002] process digital primary inputs from the FAA and DoD air traffic surveillance systems, if available. 3.1.1.3 The system must [STARS-003] process secondary inputs from the FAA and DoD air traffic surveillance systems.
3.2.1.2.4.6.1.4	4	STARS-SSD-01477	For each radar interface, adaptation shall[4] define a range and azimuth location and positional tolerance, Mode 3A code, and altitude for each beacon RTQC target.	3.1.1	3.1.1.2 The system must [STARS-002] process digital primary inputs from the FAA and DoD air traffic surveillance systems, if available. 3.1.1.3 The system must [STARS-003] process secondary inputs from the FAA and DoD air traffic surveillance systems.

3.2.1.2.4.6.1.4	5	STARS-SSD-01478	For each radar interface, adaptation shall[5] define the minimum and maximum number of beacon or search Sector Marks that can be received over an adaptable time period.	3.1.1	3.1.1.2 The system must [STARS-002] process digital primary inputs from the FAA and DoD air traffic surveillance systems, if available. 3.1.1.3 The system must [STARS-003] process secondary inputs from the FAA and DoD air traffic surveillance systems.
3.2.1.2.4.6.1.5	1	STARS-SSD-01479	ESL shall[1] monitor the presence and positional accuracy of PARROTs in order to confirm the accuracy of received data.	3.1.1	3.1.1.2 The system must [STARS-002] process digital primary inputs from the FAA and DoD air traffic surveillance systems, if available. 3.1.1.3 The system must [STARS-003] process secondary inputs from the FAA and DoD air traffic surveillance systems.
3.2.1.2.4.6.1.5	2	STARS-SSD-01480	For each radar interface, adaptation shall[2] define the number of PARROTs to be monitored, and for each PARROT the minimum and maximum number of PARROT targets that can be received over an adaptable time period.	3.1.1	3.1.1.2 The system must [STARS-002] process digital primary inputs from the FAA and DoD air traffic surveillance systems, if available. 3.1.1.3 The system must [STARS-003] process secondary inputs from the FAA and DoD air traffic surveillance systems.
3.2.1.2.4.6.1.5	3	STARS-SSD-01481	For each radar interface, adaptation shall[3] define for each PARROT, a range and azimuth location and positional tolerance.	3.1.1	3.1.1.2 The system must [STARS-002] process digital primary inputs from the FAA and DoD air traffic surveillance systems, if available. 3.1.1.3 The system must [STARS-003] process secondary inputs from the FAA and DoD air traffic surveillance systems.
3.2.1.2.4.6.1.5	4	STARS-SSD-01482	For each radar interface, adaptation shall[4] define for each PARROT, a valid Mode 3A code.	3.1.1	3.1.1.2 The system must [STARS-002] process digital primary inputs from the FAA and DoD air traffic surveillance systems, if available. 3.1.1.3 The system must [STARS-003] process secondary inputs from the FAA and DoD air traffic surveillance systems.

3.2.1.2.4.6.1.5	5	STARS-SSD-01483	For each radar interface, adaptation shall[5] define for each PARROT, the number of range and azimuth difference samples to be collected.	3.1.1	3.1.1.2 The system must [STARS-002] process digital primary inputs from the FAA and DoD air traffic surveillance systems, if available. 3.1.1.3 The system must [STARS-003] process secondary inputs from the FAA and DoD air traffic surveillance systems.
3.2.1.2.4.6.1.5	6	STARS-SSD-01484	For each radar interface, adaptation shall[6] define for each PARROT, a mean range and azimuth difference tolerance.	3.1.1	3.1.1.2 The system must [STARS-002] process digital primary inputs from the FAA and DoD air traffic surveillance systems, if available. 3.1.1.3 The system must [STARS-003] process secondary inputs from the FAA and DoD air traffic surveillance systems.
3.2.1.2.4.1.6.6	1	STARS-SSD-01485	When monitoring is enabled, ESL shall[1] monitor the presence and positional accuracy of permanent echoes in order to confirm the accuracy of received data.	3.2.9	3.2.9.1 Portrayal of the relative position of aircraft on the display must [STARS-301] achieve an accuracy of less than or equal to 0.125 nautical miles or less than or equal to 0.4 percent of range scale.
3.2.1.2.4.1.6.6	2	STARS-SSD-01486	For each radar interface, adaptation shall[2] define the number of permanent echoes to be monitored, and for each permanent echo the minimum and maximum number of permanent echo targets that can be received over an adaptable time period.	3.1.1	3.1.1.2 The system must [STARS-002] process digital primary inputs from the FAA and DoD air traffic surveillance systems, if available. 3.1.1.3 The system must [STARS-003] process secondary inputs from the FAA and DoD air traffic surveillance systems.
3.2.1.2.4.1.6.6	3	STARS-SSD-01487	For each radar interface, adaptation shall[3] define for each permanent echo, a range and azimuth positional tolerance.	3.1.1	3.1.1.2 The system must [STARS-002] process digital primary inputs from the FAA and DoD air traffic surveillance systems, if available. 3.1.1.3 The system must [STARS-003] process secondary inputs from the FAA and DoD air traffic surveillance systems.
3.2.1.2.4.1.6.6	4	STARS-SSD-01488	For each radar interface, adaptation shall[4] define for each permanent echo, the number of range and azimuth positional difference samples that will be collected.	3.1.1	3.1.1.2 The system must [STARS-002] process digital primary inputs from the FAA and DoD air traffic surveillance systems, if available. 3.1.1.3 The system must [STARS-003] process secondary inputs from the FAA and DoD air traffic surveillance systems.

3.2.1.2.4.1.6.6	5	STARS-SSD-01489	For each radar interface, adaptation shall[5] define for each permanent echo, a mean range and azimuth difference tolerance.	3.1.1	3.1.1.2 The system must [STARS-002] process digital primary inputs from the FAA and DoD air traffic surveillance systems, if available. 3.1.1.3 The system must [STARS-003] process secondary inputs from the FAA and DoD air traffic surveillance systems.
3.2.1.2.4.1.6.7	1	STARS-SSD-01490	State information shall[1] be displayed at the MCP for the Control State associated with the OSF and SCSC external system interfaces.	(Derived)	(Derived)
3.2.1.2.4.1.6.7	2	STARS-SSD-01491	When an OSF or SCSC external system interface has an On-line Control State, activity/inactivity of the connection shall[2] be detected automatically and result in the State being automatically set to an Active/Inactive state.	(Derived)	(Derived)
3.2.1.2.4.1.6.7	4	STARS-SSD-01492	Upon a change of Control of the OSF or SCSC external system interface, a visual indication shall[4] be provided at the MCP.	(Derived)	(Derived)
3.2.1.2.4.1.6.8	1	STARS-SSD-01493	Status information shall[1] be displayed at the MCP for the hardware status of each GPW, the Page Printer and the SSS within the Support Subsystem.	(Derived)	(Derived)
3.2.1.2.4.1.6.8	2	STARS-SSD-01494	Failure of the SSS, the Page Printer or any GPW shall[2] be detected automatically and result in visual and audible indications at the MCP.	3.1.10	3.1.10.25 The system must [STARS-155] generate visual alerts based upon the adaptation of each individual facility.
3.2.1.2.4.1.6.8	3	STARS-SSD-01495	When all failures are resolved, the SSS, the Page Printer or GPW shall[3] automatically transition to a Pass status.	(Derived)	(Derived)
3.2.1.2.4.1.6.9	1	STARS-SSD-01496	Status information shall[1] be displayed at the MCP for the hardware associated with each Hub, Router and Switch within the ESL and Support Subsystems.	(Derived)	(Derived)
3.2.1.2.4.1.6.9	2	STARS-SSD-01497	Failure of network hardware components shall[2] be detected automatically and result in visual and audible failure indications at the MCP.	3.1.10	3.1.10.25 The system must [STARS-155] generate visual alerts based upon the adaptation of each individual facility.
3.2.1.2.4.1.6.9	3	STARS-SSD-01498	When all failures are resolved, ESL or Support network equipment (Hubs, Routers or Switches) shall[3] automatically transition to a Pass status.	(Derived)	(Derived)
3.2.1.2.4.1.6.9	4	STARS-SSD-01499	The ESL MCP shall[4] display network switch status as "Degraded" if one or two switch ports are failed and "Fail" if three or more switch ports are failed.	3.1.10	3.1.10.25 The system must [STARS-155] generate visual alerts based upon the adaptation of each individual facility.

3.2.1.2.4.1.6.10	1	STARS-SSD-01500	Status information shall[1] be displayed at the MCP for the hardware associated with the Firewall and WAN Router.	(Derived)	(Derived)
3.2.1.2.4.1.6.10	2	STARS-SSD-01501	Failure of the Firewall or WAN Router hardware components shall[2] be detected automatically and result in visual and audible indications at the MCP.	3.1.10	3.1.10.25 The system must [STARS-155] generate visual alerts based upon the adaptation of each individual facility.
3.2.1.2.4.1.6.10	3	STARS-SSD-01502	When all failures are resolved, the Firewall and WAN Router shall[3] automatically transition to a Pass status.	(Derived)	(Derived)
3.2.1.2.4.2	1	STARS-SSD-01503	ESL shall[1] automatically provide status information at the MCP for each ESL resource (as included in 3.2.1.2.4.1).	(Derived)	(Derived)
3.2.1.2.4.3	1	STARS-SSD-01504	Failure of any resource monitored by ESL (as included in 3.2.1.2.4.1) shall[1] be detected automatically.	3.1.10	3.1.10.25 The system must [STARS-155] generate visual alerts based upon the adaptation of each individual facility.
3.2.1.2.4.4	1	STARS-SSD-01505	When possible, a visual indication of a ESL MCP failure shall[1] be displayed on the associated workstation.	3.1.10	3.1.10.3 The system must [STARS-133] based upon adaptation, display the general status of the system at each TCP. 3.1.10.25 The system must [STARS-155] generate visual alerts based upon the adaptation of each individual facility.
3.2.1.2.4.5	1	STARS-SSD-01506	In the event of MCP failure, the rest of the service level shall[1] continue operating autonomously, providing ATC Operational functionality.	3.3.2	3.3.2.1 The system design must [STARS-321] preclude single point failures, excluding TCWs, MCWs, and TDWs.
3.2.1.2.4.6	1	STARS-SSD-01507	The status of each ESL hardware components (as included in 3.2.1.2.4.1) shall[1] be monitored.	(Derived)	(Derived)
3.2.1.2.4.7	1	STARS-SSD-01508	ESL shall[1] monitor the status of the ESL software components (as included in 3.2.1.2.4.1).	(Derived)	(Derived)
3.2.1.2.4.8	1	STARS-SSD-01509	ESL shall[1] monitor the status of the ESL external system interfaces (as included in 3.2.1.2.4.1).	(Derived)	(Derived)
3.2.1.2.4.8	2	STARS-SSD-01510	The status of each external system interface (as included in 3.2.1.2.4.1) shall[2] be displayed.	3.1.10	3.1.10.3 The system must [STARS-133] based upon adaptation, display the general status of the system at each TCP.

3.2.1.2.4.9.1	1	STARS-SSD-01511	For a specified radar, MCP input shall[1] display and print the current search collimation correction factors being used by the ESL subsystem.	3.1.9	3.1.9.5 The system must [STARS-115] provide a controller with the ability to manipulate the pre-sentation of information on an individual situation display. 3.1.9.6 The system must [STARS-116] allow for the control of global system information. 3.1.9.7 The system must [STARS-117] allow for the use of context sensitive (implied) functions and user actions.
3.2.1.2.4.9.2	1	STARS-SSD-01512	For a specified radar, MCP input shall[1] enter and apply new search target range and azimuth collimation correction factors to be used by the ESL subsystem.	3.1.9	3.1.9.6 The system must [STARS-116] allow for the control of global system information. 3.1.9.7 The system must [STARS-117] allow for the use of context sensitive (implied) functions and user actions.
3.2.1.2.4.9.2	2	STARS-SSD-01513	Each entered search target range and azimuth correction factor shall[2] be compared against adaptable thresholds and rejected when not within the adapted range.	3.1.9	3.1.9.8 The system must [STARS-118] perform error checking on all input messages.
3.2.1.2.4.9.2	3	STARS-SSD-01514	Valid search target range and azimuth correction factor entries shall[3] be applied to all search radar messages received from the radar and used by each TCP.	3.1.1	3.1.1.2 The system must [STARS-002] process digital primary inputs from the FAA and DoD air traffic surveillance systems, if available. 3.1.1.3 The system must [STARS-003] process secondary inputs from the FAA and DoD air traffic surveillance systems.
3.2.1.2.4.9.2	4	STARS-SSD-01515	An informational system message shall[4] be displayed indicating that new collimation correction factors have been applied to the ESL subsystem for the radar.	3.1.10	3.1.10.3 The system must [STARS-133] based upon adaptation, display the general status of the system at each TCP.
3.2.1.2.4.9.3	1	STARS-SSD-01516	In ESL mode, each TCW and TDW shall[1] display PARROTs and permanent echoes for the currently selected radar.	3.1.10	3.1.10.7 The system must [STARS-137] display a target indicator at the position of each surveillance target received in single sensor mode. 3.1.10.8 The system must [STARS-138] display a target indicator at the composite position of each surveillance target received in multi-sensor and Fusion modes.

3.2.1.2.4.9.4	1	STARS-SSD-01517	In ESL mode, each TCW and TDW shall[1] allow for display of beacon and search RTQC targets excluding sector marks for the currently selected radar.	3.1.10	3.1.10.7 The system must [STARS-137] display a target indicator at the position of each surveillance target received in single sensor mode. 3.1.10.8 The system must [STARS-138] display a target indicator at the composite position of each surveillance target received in multi-sensor and Fusion modes.
3.2.1.2.4.9.4	2	STARS-SSD-01518	In ES workstation mode, each TCW and TDW shall[2] display search test targets for the currently selected radar.	3.1.10	3.1.10.7 The system must [STARS-137] display a target indicator at the position of each surveillance target received in single sensor mode. 3.1.10.8 The system must [STARS-138] display a target indicator at the composite position of each surveillance target received in multi-sensor and Fusion modes.
3.2.1.2.4.9.5	1	STARS-SSD-01519	The results of monitoring status and radar identification messages from surveillance systems shall[1] be displayed at the MCP.	(Derived)	(Derived)
3.2.1.2.4.9.6	1	STARS-SSD-01520	When a TCW or TDW is configured in ESL mode, TCP input shall[1] switch the workstation from a TCP to a monitoring MCP.	3.1.9	3.1.9.5 The system must [STARS-115] provide a controller with the ability to manipulate the pre-sentation of information on an individual situation display.
3.2.1.2.4.9.6	2	STARS-SSD-01521	When a TCW or TDW is configured as a monitoring MCP, MCP input shall[2] switch the workstation from an MCP to a TCP.	3.1.9	3.1.9.5 The system must [STARS-115] provide a controller with the ability to manipulate the pre-sentation of information on an individual situation display.
3.2.1.2.4.9.6	3	STARS-SSD-01522	The MCP shall[3] be prevented from switching to a TCP, if the MCP is currently logged on and therefore has control authorization.	3.1.9	3.1.9.5 The system must [STARS-115] provide a controller with the ability to manipulate the pre-sentation of information on an individual situation display.
3.2.1.2.4.9.7	1	STARS-SSD-01523	When no Parrots, PEs, or Radar Identification Messages are adapted for a radar, the MCW shall[1] inhibit display of the corresponding status line on that radar's detailed status screen.	(Derived)	(Derived)

3.2.1.2.4.10	1	STARS-SSD-01524	Notification data shall[1] include the associated ESL resource identification, date, and timestamp.	3.1.11	3.1.11.3 The system must [STARS-173] record all data necessary to recreate system status, performance, environment, and situation displays. 3.1.11.5 All recorded data must [STARS-175] be time stamped and synchronized to a calibrated national standard time source.
3.2.1.2.4.10	2	STARS-SSD-01525	Redundant or duplicate notifications shall[2] be filtered out.	3.1.10	3.1.10.3 The system must [STARS-133] based upon adaptation, display the general status of the system at each TCP.
3.2.1.2.4.10	3	STARS-SSD-01526	ESL shall[3] generate a notification when an alarm, alert, error, or state change occurs in the system for a monitored resource.	3.1.10	3.1.10.3 The system must [STARS-133] based upon adaptation, display the general status of the system at each TCP.
3.2.1.2.4.10	4	STARS-SSD-01527	When ESL generates an alarm status event, an audible alarm shall[4] also sound at all monitoring MCPs.	3.1.10	3.1.10.26 The system must [STARS-156] generate aural alarms based upon the adaptation of each individual TCP.
3.2.1.2.4.10	5	STARS-SSD-01528	Only the MCP with current control authority shall[5] be allowed to perform manual alarm acknowledgement.	(Derived)	(Derived)
3.2.1.2.4.10	6	STARS-SSD-01529	When the MCP with current control authority acknowledges the alarm, the audible alarm at all monitoring MCPs shall[6] by default also be acknowledged.	(Derived)	(Derived)
3.2.1.2.4.10	7	STARS-SSD-01530	MCP input shall[7] acknowledge selected alarm notifications which simultaneously silences any associated audible alarms.	(Derived)	(Derived)
3.2.1.2.4.10	8	STARS-SSD-01531	MCP input shall[8] silence all audible alarms without affecting the associated alarm notifications.	(Derived)	(Derived)
3.2.1.2.4.10	9	STARS-SSD-01532	For any resource, unacknowledged audible and visual alarms shall[9] be automatically acknowledged if the MCP performs a reconfiguration action to change its resource state (e.g., cold-start, warm-start, Off-line, Software switch).	(Derived)	(Derived)
3.2.1.2.4.10	10	STARS-SSD-01533	MCP input shall[10] control the volume of the ESL audible alarm over an adaptable range.	(Derived)	(Derived)
3.2.1.2.4.10	11	STARS-SSD-01534	The minimum and maximum values of the MCP selectable volume control shall[11] be adaptable between 0 and 100.	(Derived)	(Derived)
3.2.1.2.5.1.1	1	STARS-SSD-01535	MCP input shall[1] allow the user to log into the ESL MCP and obtain authorization to control ESL resources.	(Derived)	(Derived)

3.2.1.2.5.1.1	2	STARS-SSD-01536	During Login, the MCP shall[2] display a "*" in the password entry field for each entered character.	(Derived)	(Derived)
3.2.1.2.5.1.1	3	STARS-SSD-01537	The MCP shall[3] reject an invalid password and display an error message.	(Derived)	(Derived)
3.2.1.2.5.1.1	4	STARS-SSD-01538	If the log-in is successful, the MCP shall[4] be given control authorization for the ESL subsystem.	3.1.9	3.1.9.6 The system must [STARS-116] allow for the control of global system information.
3.2.1.2.5.1.1	5	STARS-SSD-01539	When successfully logged on, the MCP display shall[5] indicate that the current MCP has control authorization for the ESL subsystem.	(Derived)	(Derived)
3.2.1.2.5.1.1	6	STARS-SSD-01540	The MCP shall[6] use a single site-wide password.	(Derived)	(Derived)
3.2.1.2.5.1.1	7	STARS-SSD-01541	When more than one MCP is configured, each MCP shall[7] be provided with status monitoring capabilities, but only one can have control authorization for the ESL subsystem.	3.1.9	3.1.9.6 The system must [STARS-116] allow for the control of global system information.
3.2.1.2.5.1.1	8	STARS-SSD-01542	An indication of the current MCP authorization status shall[8] be provided at each MCP.	(Derived)	(Derived)
3.2.1.2.5.1.2	1	STARS-SSD-01543	MCP input shall[1] allow an MCP with control authorization to change the current site-wide password.	3.1.9	3.1.9.6 The system must [STARS-116] allow for the control of global system information.
3.2.1.2.5.1.2	2	STARS-SSD-01544	Changing the site-wide MCP password shall[2] include verification of the password being changed, plus entry of a new password twice.	(Derived)	(Derived)
3.2.1.2.5.1.2	3	STARS-SSD-01545	The password change shall[3] be rejected if the entry of the password being changed is not valid, or the second entry of the new password is not identical to the first.	(Derived)	(Derived)
3.2.1.2.5.1.2	4	STARS-SSD-01546	If the password change is rejected, an error notification shall[4] be displayed indicating that an invalid MCP password change was attempted.	(Derived)	(Derived)
3.2.1.2.5.2	1	STARS-SSD-01547	MCP input shall[1] allow the MCP with control authorization to manually relinquish control authority by logging out of the system.	3.1.9	3.1.9.6 The system must [STARS-116] allow for the control of global system information.
3.2.1.2.5.2	2	STARS-SSD-01548	Before control authority is relinquished, the MCP shall[2] display a confirmation message.	(Derived)	(Derived)
3.2.1.2.5.2	3	STARS-SSD-01549	Upon acceptance of the confirmation message via MCP input, the MCP shall[3] relinquish control authorization.	3.1.9	3.1.9.6 The system must [STARS-116] allow for the control of global system information.
3.2.1.2.5.2	4	STARS-SSD-01550	Following log-out, the current MCP display shall[4] indicate monitor-only authorization.	(Derived)	(Derived)
3.2.1.2.5.3	1	STARS-SSD-01551	The ESL Subsystem computers shall[1] be controlled by the ESL MCP.	3.1.9	3.1.9.6 The system must [STARS-116] allow for the control of global system information.

3.2.1.2.5.3	2	STARS-SSD-01552	The ESL Radar external interface main and alternate feeds shall[2] be controlled by the ESL MCP.	3.1.9	3.1.9.6 The system must [STARS-116] allow for the control of global system information.
3.2.1.2.5.3	3	STARS-SSD-01553	The ESL serial interface hardware (SIO) external interface shall[3] be controlled by the ESL MCP.	3.1.9	3.1.9.6 The system must [STARS-116] allow for the control of global system information.
3.2.1.2.5.3	4	STARS-SSD-01554	The OSF and SCSC external interface shall[4] be controlled by the ESL MCP.	3.1.9	3.1.9.6 The system must [STARS-116] allow for the control of global system information.
3.2.1.2.5.3	5	STARS-SSD-01555	The GPS Time Reference Source external interface shall[5] be controlled by the ESL MCP.	3.1.9	3.1.9.6 The system must [STARS-116] allow for the control of global system information.
3.2.1.2.5.4	1	STARS-SSD-01556	Operator input shall[1] control the transfer of software baselines and adaptation data sets to all ESL Subsystem computers.	3.1.9	3.1.9.6 The system must [STARS-116] allow for the control of global system information.
3.2.1.2.5.4	2	STARS-SSD-01557	Operator input shall[2] control the transfer of core dump and log files from all ESL Subsystem computers.	3.1.9	3.1.9.6 The system must [STARS-116] allow for the control of global system information.
3.2.1.2.5.5	1	STARS-SSD-01558	ESL shall[1] include MCP initiated CAS diagnostics for ESL Subsystem computers.	9.2.4	9.2.4.1 STARS must [STARS-661] continuously monitor, log, and record the health of STARS including telecommunications, components, external interfaces, and system services.
3.2.1.2.5.5	2	STARS-SSD-01559	ESL shall[2] include MCP initiated CAS diagnostics for ESL serial interface hardware (SIO) for radar external interfaces.	9.2.4	9.2.4.1 STARS must [STARS-661] continuously monitor, log, and record the health of STARS including telecommunications, components, external interfaces, and system services.
3.2.1.2.5.5	3	STARS-SSD-01560	ESL shall[3] include MCP initiated CAS diagnostics for Support Subsystem Computers (GPWs and the SSS).	9.2.4	9.2.4.1 STARS must [STARS-661] continuously monitor, log, and record the health of STARS including telecommunications, components, external interfaces, and system services.
3.2.1.2.5.6.1	1	STARS-SSD-01561	Allocation of specific software components or baselines for operational use shall[1] be controlled by MCP input.	3.1.9	3.1.9.6 The system must [STARS-116] allow for the control of global system information.
3.2.1.2.5.6.2	1	STARS-SSD-01562	MCP input shall[1] initiate a reset of all ESL Subsystem computers and restart of their associated operating systems and application software.	3.1.9	3.1.9.6 The system must [STARS-116] allow for the control of global system information.
3.2.1.2.5.6.3	1	STARS-SSD-01563	MCP input shall[1] initiate an application software reload and restart in all ESL Subsystem computers.	3.1.9	3.1.9.6 The system must [STARS-116] allow for the control of global system information.
3.2.1.2.5.6.4	1	STARS-SSD-01564	ESL shall[1] include MCP-initiated ESL restart.	3.1.9	3.1.9.6 The system must [STARS-116] allow for the control of global system information.
3.2.1.2.5.6.5	1	STARS-SSD-01565	MCP input shall[1] initiate a cold-start of a user-defined set of ESL Subsystem computers.	3.1.9	3.1.9.6 The system must [STARS-116] allow for the control of global system information.

3.2.1.2.5.6.5	2	STARS-SSD-01566	ESL System State including system parameters, data processing and presentation shall[2] revert to a default state after a cold-start of the entire ESL subsystem.	3.1.11 3.2.2	3.1.11.6 The system must [STARS-176] continuously record all critical data required for recovery. 3.2.2.3 The system must [STARS-223] recover from power failure to the same operational state as before the failure.
3.2.1.2.5.6.6	1	STARS-SSD-01567	MCP input shall[1] initiate a warm-start of a user-defined set of ESL Subsystem computers.	3.1.9	3.1.9.6 The system must [STARS-116] allow for the control of global system information.
3.2.1.2.5.6.6	2	STARS-SSD-01568	ESL System State including system parameters, data processing and presentation shall[2] be maintained after a warm-start of the entire ESL subsystem, or a specific workstation.	3.1.11 3.2.2	3.1.11.6 The system must [STARS-176] continuously record all critical data required for recovery. 3.2.2.3 The system must [STARS-223] recover from power failure to the same operational state as before the failure.
3.2.1.2.5.6.7	1	STARS-SSD-01569	Recovery from system wide power failures shall[1] return the ESL system to operational and training Air Traffic control processing activities including data processing and presentation in existence prior to the power failure, unless the operating system did not recover. The definition of operational and training Air Traffic control processing activities excludes the following: a. Resource and performance verification tests including On-line and Off-line diagnostics. b. Control and Monitor MCPs will recover from the power failure by coming up with Monitor Authorization with windows and menus in a default state. c. Temporary adjustments, for example, display center when a center adjustment is not active. TCWs and TDWs in training exercises will be returned to the training exercise but training data will not be automatically restarted.	3.1.11 3.2.2	3.1.11.6 The system must [STARS-176] continuously record all critical data required for recovery. 3.2.2.3 The system must [STARS-223] recover from power failure to the same operational state as before the failure.
3.2.1.2.5.6.8.1	1	STARS-SSD-01570	MCP input shall[1] configure the ESL Subsystem computers into the On-line or Off-line state.	3.1.9	3.1.9.6 The system must [STARS-116] allow for the control of global system information.
3.2.1.2.5.6.8.1	2	STARS-SSD-01571	MCP input shall[2] configure the ESL Radar external interfaces main and alternate feeds into the On-line or Off-line state.	3.1.9	3.1.9.6 The system must [STARS-116] allow for the control of global system information.

3.2.1.2.5.6.8.1	3	STARS-SSD-01572	MCP input shall[3] configure the ESL serial interface hardware (SIO) external interfaces into the On-line or Off-line state.	3.1.9	3.1.9.6 The system must [STARS-116] allow for the control of global system information.
3.2.1.2.5.6.8.1	4	STARS-SSD-01573	MCP input shall[4] configure the SCSC and OSF external interface into the On-line or Off-line state.	3.1.9	3.1.9.6 The system must [STARS-116] allow for the control of global system information.
3.2.1.2.5.6.8.1	5	STARS-SSD-01574	MCP input shall[5] configure the GPS Time Reference Source external interface into the On-line or Off-line state.	3.1.9	3.1.9.6 The system must [STARS-116] allow for the control of global system information.
3.2.1.2.5.6.8.1	6	STARS-SSD-01575	A single MCP command shall[6] configure multiple SIO modules within a single selected enclosure.	3.1.9	3.1.9.6 The system must [STARS-116] allow for the control of global system information.
3.2.1.2.5.6.8.2	1	STARS-SSD-01576	When the GPS interface has an Off-line state, the ESL subsystem time shall[1] be synchronized using the internal CAS workstation time.	3.1.11	3.1.11.5 All recorded data must [STARS-175] be time stamped and synchronized to a calibrated national standard time source.
3.2.1.2.5.6.8.2	2	STARS-SSD-01577	When the GPS interface has an Off-line state, MCP input shall[2] be able to change the ESL subsystem time.	3.1.9	3.1.9.6 The system must [STARS-116] allow for the control of global system information.
3.2.1.2.5.6.8.2	3	STARS-SSD-01578	When the GPS interface has an On-line state, the MCP shall[3] be prevented from changing the ESL subsystem time.	3.1.9	3.1.9.8 The system must [STARS-118] perform error checking on all input messages.
3.2.1.2.5.6.8.3	1	STARS-SSD-01579	The list of workstations eligible for Off-line selection shall[1] include workstations in an On-line state for which other MCP control actions are not currently in progress.	3.1.9	3.1.9.6 The system must [STARS-116] allow for the control of global system information.
3.2.1.2.5.6.8.3	2	STARS-SSD-01580	The MCP shall[2] be prevented from reconfiguring the local MCP Off-line.	3.1.9	3.1.9.8 The system must [STARS-118] perform error checking on all input messages.
3.2.1.2.5.6.8.3	3	STARS-SSD-01581	The list of workstations eligible for On-line selection shall[3] include workstations in an Off-line state for which other MCP control actions are not currently in progress.	3.1.9	3.1.9.6 The system must [STARS-116] allow for the control of global system information.
3.2.1.2.5.6.8.4	1	STARS-SSD-01582	When a radar feed is Off-line, the data being received by ESL for the radar feed shall[1] be excluded from display at TCWs and TDWs.	3.1.10	3.1.10.7 The system must [STARS-137] display a target indicator at the position of each surveillance target received in single sensor mode. 3.1.10.8 The system must [STARS-138] display a target indicator at the composite position of each surveillance target received in multi-sensor and Fusion modes.

3.2.1.2.5.6.8.4	2	STARS-SSD-01583	When a radar feed is Off-line, radar feed status shall[2] still be monitored in order to provide the MCP with the current condition of the serial channels associated with the feed.	3.1.1	3.1.1.2 The system must [STARS-002] process digital primary inputs from the FAA and DoD air traffic surveillance systems, if available. 3.1.1.3 The system must [STARS-003] process secondary inputs from the FAA and DoD air traffic surveillance systems.
3.2.1.2.5.6.8.4	3	STARS-SSD-01584	The MCP shall[3] be prevented from controlling the state of the radar feeds for multiple radar interfaces simultaneously.	3.1.9	3.1.9.6 The system must [STARS-116] allow for the control of global system information.
3.2.1.2.5.6.8.4	4	STARS-SSD-01585	When a live radar interface has an Off-line state, RTQC messages, Radar Status Messages, Radar identification messages, PARROTs, and permanent echoes shall[4] be excluded from monitoring.	3.1.10	3.1.10.7 The system must [STARS-137] display a target indicator at the position of each surveillance target received in single sensor mode. 3.1.10.8 The system must [STARS-138] display a target indicator at the composite position of each surveillance target received in multi-sensor and Fusion modes.
3.2.1.2.5.6.8.5	1	STARS-SSD-01586	MCP input shall[1] inhibit or enable the reporting of the status of each adapted PARROT and permanent echo.	3.1.9	3.1.9.6 The system must [STARS-116] allow for the control of global system information.
3.2.1.2.5.6.8.5	2	STARS-SSD-01587	If reporting is inhibited for a PARROT or permanent echo, its status shall[2] be displayed as Off-line at the MCP.	(Derived)	(Derived)
3.2.1.2.5.6.8.5	3	STARS-SSD-01588	If reporting is inhibited for a PARROT or permanent echo, its status shall[3] not contribute to the status of its associated radar.	(Derived)	(Derived)
3.2.1.2.5.6.9	1	STARS-SSD-01589	MCP input shall[1] initiate a shutdown of ESL Subsystem Computers.	3.1.9	3.1.9.6 The system must [STARS-116] allow for the control of global system information.
3.2.1.2.5.6.9	2	STARS-SSD-01590	ESL System State including system parameters, data processing and presentation shall[2] revert to a default state after a shutdown of the entire ESL subsystem.	3.1.11 3.2.2	3.1.11.6 The system must [STARS-176] continuously record all critical data required for recovery. 3.2.2.3 The system must [STARS-223] recover from power failure to the same operational state as before the failure.
3.2.1.2.6.1.1.1	1	STARS-SSD-01591	MCP input shall[1] initiate an Off-line SIO diagnostic test on a specified SIO module.	3.1.9	3.1.9.6 The system must [STARS-116] allow for the control of global system information.
3.2.1.2.6.1.1.1	2	STARS-SSD-01592	The MCP shall[2] be prevented from performing Off-line diagnostic tests on multiple SIO modules simultaneously.	3.1.9	3.1.9.6 The system must [STARS-116] allow for the control of global system information.

3.2.1.2.6.1.1.1	3	STARS-SSD-01593	Once initiated, an Off-line SIO diagnostic test shall[3] run to completion unless terminated by the MCP.	3.1.9	3.1.9.6 The system must [STARS-116] allow for the control of global system information.
3.2.1.2.6.1.1.1	4	STARS-SSD-01594	When an Off-line diagnostic test is running on a SIO, the MCP shall[4] be prevented from including the SIO in any MCP control action or diagnostic until the Off-line diagnostic test has completed or is terminated by the MCP.	3.1.9	3.1.9.6 The system must [STARS-116] allow for the control of global system information.
3.2.1.2.6.1.1.1	5	STARS-SSD-01595	At the completion of the Off-line SIO diagnostic test, a test report shall[5] automatically be generated.	(Derived)	(Derived)
3.2.1.2.6.1.1.1	6	STARS-SSD-01596	The MCP shall[6] be able to print the Off-line SIO diagnostic test report on the network printer.	3.1.12	3.1.12.4 The system must [STARS-184] provide ATC operational information, including graphical plots, in electronic printable form.
3.2.1.2.6.1.1.2	1	STARS-SSD-01597	MCP input shall[1] initiate an Off-line CAS diagnostic test on ESL Subsystem Computers.	3.1.9	3.1.9.6 The system must [STARS-116] allow for the control of global system information.
3.2.1.2.6.1.1.2	2	STARS-SSD-01598	Once initiated, an Off-line CAS diagnostic test shall[2] run to completion unless terminated by the MCP.	(Derived)	(Derived)
3.2.1.2.6.1.1.2	3	STARS-SSD-01599	When a workstation is involved in an Off-line CAS diagnostic test, the MCP shall[3] be prevented from including the workstation in any other MCP control action or diagnostic until the Off-line diagnostic test has completed or is terminated by the MCP.	3.1.9	3.1.9.6 The system must [STARS-116] allow for the control of global system information.
3.2.1.2.6.1.1.2	4	STARS-SSD-01600	At the completion of an Off-line CAS diagnostic test, a test report shall[4] be automatically generated.	(Derived)	(Derived)
3.2.1.2.6.1.1.2	5	STARS-SSD-01601	The Off-line CAS diagnostic test report shall[5] contain a matrix of the workstations involved in the test, the tests performed, and the results of the test.	(Derived)	(Derived)
3.2.1.2.6.1.1.2	6	STARS-SSD-01602	The MCP shall[6] be able to print the Off-line CAS diagnostic test report on the network printer.	3.1.12	3.1.12.4 The system must [STARS-184] provide ATC operational information, including graphical plots, in electronic printable form.
3.2.1.2.6.1.2.1	1	STARS-SSD-01603	A set of periodic background tests shall[1] automatically be performed on all On-line ESL Subsystem Computers as part of normal MCP status monitoring.	9.2.4	9.2.4.1 STARS must [STARS-661] continuously monitor, log, and record the health of STARS including telecommunications, components, external interfaces, and system services.
3.2.1.2.6.1.2.1	2	STARS-SSD-01604	Once initiated, periodic on-line hardware diagnostic tests shall[2] run without human intervention.	9.2.4	9.2.4.1 STARS must [STARS-661] continuously monitor, log, and record the health of STARS including telecommunications, components, external interfaces, and system services.
3.2.1.2.6.1.2.1	3	STARS-SSD-01605	Off-line ESL Subsystem Computers shall[3] be excluded from periodic background tests.	9.2.4	9.2.4.1 STARS must [STARS-661] continuously monitor, log, and record the health of STARS including telecommunications, components, external interfaces, and system services.

3.2.1.2.6.1.2.1	4	STARS-SSD-01606	The set of periodic background tests shall[4] include a processor test, a memory test, a disk test, and software checksum, software version, adaptation checksum, and adaptation version checks.	9.2.4	9.2.4.1 STARS must [STARS-661] continuously monitor, log, and record the health of STARS including telecommunications, components, external interfaces, and system services.
3.2.1.2.6.1.2.1	5	STARS-SSD-01607	The results of each periodic background test shall[5] be displayed for ESL Subsystem Computers.	9.2.4	9.2.4.1 STARS must [STARS-661] continuously monitor, log, and record the health of STARS including telecommunications, components, external interfaces, and system services.
3.2.1.2.6.1.2.1	6	STARS-SSD-01608	Failure of any periodic background test shall[6] be detected automatically and result in a visual and audible indication at any MCP.	9.2.4	9.2.4.1 STARS must [STARS-661] continuously monitor, log, and record the health of STARS including telecommunications, components, external interfaces, and system services.
3.2.1.2.6.1.2.1	7	STARS-SSD-01609	The detection of a software version, software checksum, adaptation version, or adaptation checksum test failure within a ESL Subsystem Computer shall[7] cause that computer to be declared to have a critical failure.	9.2.4	9.2.4.1 STARS must [STARS-661] continuously monitor, log, and record the health of STARS including telecommunications, components, external interfaces, and system services.
3.2.1.2.6.1.2.1	8	STARS-SSD-01610	Periodic background tests shall[8] be canceled on a workstation upon initiation of a resource verification test or On-line CAS diagnostic test that includes that workstation.	3.1.9	3.1.9.6 The system must [STARS-116] allow for the control of global system information.
3.2.1.2.6.1.2.2	1	STARS-SSD-01611	Periodic on-line tests shall[1] be performed to verify that corruption of application software has not occurred since loading.	9.2.4	9.2.4.1 STARS must [STARS-661] continuously monitor, log, and record the health of STARS including telecommunications, components, external interfaces, and system services.
3.2.1.2.6.1.2.3	1	STARS-SSD-01612	Periodic on-line tests shall[1] be performed to verify that all software components in the configuration have consistent release levels for the operational and backup software.	9.2.4	9.2.4.1 STARS must [STARS-661] continuously monitor, log, and record the health of STARS including telecommunications, components, external interfaces, and system services.
3.2.1.2.6.1.2.4	1	STARS-SSD-01613	MCP input shall[1] select the period at which the set of periodic background tests are to be performed for the ESL subsystem from a value within an adaptable range.	3.1.9 9.2.4	3.1.9.6 The system must [STARS-116] allow for the control of global system information. 9.2.4.1 STARS must [STARS-661] continuously monitor, log, and record the health of STARS including telecommunications, components, external interfaces, and system services.

3.2.1.2.6.1.2.4	2	STARS-SSD-01614	The adaptable range shall[2] be set such that the background tests can be turned off, and so that the minimum period will not affect the ESL subsystem computer reserve (section 3.10) requirements	3.1.9 9.2.4	3.1.9.6 The system must [STARS-116] allow for the control of global system information. 9.2.4.1 STARS must [STARS-661] continuously monitor, log, and record the health of STARS including telecommunications, components, external interfaces, and system services.
3.2.1.2.6.1.2.5	1	STARS-SSD-01615	MCP input shall[1] initiate a series of CAS diagnostic tests, for the following resources when in an On-line state: a. ESL subsystem computers. b. Support Subsystem Computers (SSS and GPWs).	3.1.9	3.1.9.6 The system must [STARS-116] allow for the control of global system information.
3.2.1.2.6.1.2.5	2	STARS-SSD-01616	The MCP shall[2] be prevented from initiating an On-line CAS diagnostic test if a resource or performance verification test is already in progress.	3.1.9	3.1.9.6 The system must [STARS-116] allow for the control of global system information.
3.2.1.2.6.1.2.5	3	STARS-SSD-01617	When a workstation is involved in an On-line CAS diagnostic test, the MCP shall[3] be prevented from including the workstation in any other MCP action or diagnostic test until the On-line diagnostic test has completed or is terminated by the MCP.	3.1.9	3.1.9.6 The system must [STARS-116] allow for the control of global system information.
3.2.1.2.6.1.2.5	4	STARS-SSD-01618	Once initiated, an On-line CAS diagnostic test function shall[4] run to completion unless terminated by the MCP.	3.1.9	3.1.9.6 The system must [STARS-116] allow for the control of global system information.
3.2.1.2.6.1.2.6	1	STARS-SSD-01619	Results of On-line diagnostic tests shall[1] be displayed at the initiating MCP.	(Derived)	(Derived)
3.2.1.2.6.1.2.6	2	STARS-SSD-01620	At the completion of an On-line CAS diagnostic test, a test report shall[2] automatically be generated.	(Derived)	(Derived)
3.2.1.2.6.1.2.6	3	STARS-SSD-01621	The On-line CAS diagnostic test report shall[3] contain a matrix of the workstations involved in the test, the tests performed and the results of the test.	(Derived)	(Derived)
3.2.1.2.6.1.2.6	4	STARS-SSD-01622	The MCP shall[4] be able to print the On-line CAS diagnostic test report on the network printer.	3.1.12	3.1.12.4 The system must [STARS-184] provide ATC operational information, including graphical plots, in electronic printable form.
3.2.1.2.6.2.1	1	STARS-SSD-01623	MCP input shall[1] initiate a resource verification test of ESL.	3.1.9	3.1.9.6 The system must [STARS-116] allow for the control of global system information.
3.2.1.2.6.2.2	1	STARS-SSD-01624	Verification tests for each resource (ESL subsystem computers, GPWs and the SSS) shall[1] be performed On-line when resource verification tests are initiated.	3.1.9	3.1.9.6 The system must [STARS-116] allow for the control of global system information.

3.2.1.2.6.2.2	2	STARS-SSD-01625	The MCP shall[2] be prevented from initiating a resource verification test if a resource verification, performance verification, or On-line CAS diagnostic test is already in progress.	3.1.9	3.1.9.6 The system must [STARS-116] allow for the control of global system information.
3.2.1.2.6.2.2	3	STARS-SSD-01626	Once initiated, a resource verification test shall[3] run to completion unless terminated by the MCP.	3.1.9	3.1.9.6 The system must [STARS-116] allow for the control of global system information.
3.2.1.2.6.2.2	4	STARS-SSD-01627	When a resource verification test is in progress, the MCP shall[4] be prevented from performing any of the following until the resource verification test has completed, or is terminated by the MCP: a. Initiating a performance verification or On-line diagnostic test. b. Initiating an MCP control action on the workstations involved in the current resource verification test (Resource Verification only includes On-line workstations).	3.1.9	3.1.9.6 The system must [STARS-116] allow for the control of global system information.
3.2.1.2.6.2.2	5	STARS-SSD-01628	MCP initiated resource verification tests shall[5] initiate CAS diagnostic tests (including CPU, memory, and interfaces), software corruption and version checks, and adaptation corruption and version checks, for all On-line ESL subsystem computers.	3.1.9	3.1.9.6 The system must [STARS-116] allow for the control of global system information.
3.2.1.2.6.2.2	6	STARS-SSD-01629	MCP initiated resource verification tests shall[6] initiate CAS diagnostic tests (including CPU, memory, and interfaces) on Support Subsystem computers (SSS and GPWs).	3.1.9	3.1.9.6 The system must [STARS-116] allow for the control of global system information.
3.2.1.2.6.2.3	1	STARS-SSD-01630	At the completion of a resource verification test, a test report shall[1] automatically be generated.	(Derived)	(Derived)
3.2.1.2.6.2.4	1	STARS-SSD-01631	The resource verification test report shall[1] contain a matrix of the resources used in the test, the tests performed and the results of the test.	(Derived)	(Derived)
3.2.1.2.6.2.5	1	STARS-SSD-01632	Results captured in the resource verification test report shall[1] be date and time stamped.	3.1.11	3.1.11.5 All recorded data must [STARS-175] be time stamped and synchronized to a calibrated national standard time source.
3.2.1.2.6.2.6	1	STARS-SSD-01633	The resource verification test report shall[1] be displayed at the initiating MCP.	(Derived)	(Derived)
3.2.1.2.6.2.6	2	STARS-SSD-01634	The MCP shall[2] be able to print the resource verification test report on the network printer.	3.1.12	3.1.12.4 The system must [STARS-184] provide ATC operational information, including graphical plots, in electronic printable form.
3.2.1.2.6.3.1	1	STARS-SSD-01635	MCP input shall[1] initiate performance verification tests concurrent with the air traffic operations.	3.1.9	3.1.9.6 The system must [STARS-116] allow for the control of global system information.

3.2.1.2.6.3.1	2	STARS-SSD-01636	The MCP shall[2] be prevented from initiating a performance verification test if a performance verification, resource verification, or On-line diagnostic test is already in progress.	3.1.9	3.1.9.6 The system must [STARS-116] allow for the control of global system information.
3.2.1.2.6.3.1	3	STARS-SSD-01637	Once initiated, a performance verification test shall[3] run to completion unless terminated by the MCP.	3.1.9	3.1.9.6 The system must [STARS-116] allow for the control of global system information.
3.2.1.2.6.3.1	4	STARS-SSD-01638	When a performance verification test is in progress, the MCP shall[4] be prevented from initiating any MCP actions, except for authorization control or workstation options (e.g., change cursor speed), until the performance verification test has completed or has been terminated by the MCP.	3.1.9	3.1.9.6 The system must [STARS-116] allow for the control of global system information.
3.2.1.2.6.3.1	5	STARS-SSD-01639	The MCP shall[5] be prevented from initiating performance verification at the TRACON or RAPCON and remote tower simultaneously.	3.1.9	3.1.9.6 The system must [STARS-116] allow for the control of global system information.
3.2.1.2.6.3.2	1	STARS-SSD-01640	MCP input shall[1] select a TCW or TDW and direct it to enter its performance verification mode.	3.1.9	3.1.9.6 The system must [STARS-116] allow for the control of global system information.
3.2.1.2.6.3.2	2	STARS-SSD-01641	Target data shall[2] be displayed for the test radar interface at the selected TCW or TDW.	3.1.10	3.1.10.7 The system must [STARS-137] display a target indicator at the position of each surveillance target received in single sensor mode. 3.1.10.8 The system must [STARS-138] display a target indicator at the composite position of each surveillance target received in multi-sensor and Fusion modes.
3.2.1.2.6.3.2	3	STARS-SSD-01642	An indication shall[3] be provided at the selected TCW or TDW to indicate that the workstation is being used for a performance verification test.	3.1.10	3.1.10.3 The system must [STARS-133] based upon adaptation, display the general status of the system at each TCP.
3.2.1.2.6.3.3	1	STARS-SSD-01643	During a performance verification test at the TRACON or RAPCON, scenario data shall[1] automatically be injected into ESL for up to sixteen radar interfaces.	(Derived)	(Derived)
3.2.1.2.6.3.3	2	STARS-SSD-01644	During a performance verification test at a remote tower, scenario data shall[2] automatically be injected into ESL for the local radar interface at the tower.	(Derived)	(Derived)
3.2.1.2.6.3.3	3	STARS-SSD-01645	For up to sixteen simulated radar interfaces, the ESL performance verification scenario shall[3] inject target data in order to verify ESL processing of simulated PARROTs, permanent echoes, special condition codes, and RTQC messages.	(Derived)	(Derived)

3.2.1.2.6.3.3	4	STARS-SSD-01646	Scenario data from the simulator for the test radar interface shall[4] be looped back, processed by the SIO, and received by each ESL CGW before being displayed at the selected TCW or TDW.	(Derived)	(Derived)
3.2.1.2.6.3.3	5	STARS-SSD-01647	At the TRACON or RAPCON, simulated data for a single radar shall[5] use the test radar interface during performance verification.	7.1.1	7.1.1.4 STARS Test Program must [STARS-534] ensure that the functional and performance requirements have been met in an operational environment in accordance with FAA-E-2904 STARS System Specification Document (SSD).
3.2.1.2.6.3.3	6	STARS-SSD-01648	At a remote tower, simulated data for the direct radar interface shall[6] use the test radar interface during performance verification.	7.1.1	7.1.1.4 STARS Test Program must [STARS-534] ensure that the functional and performance requirements have been met in an operational environment in accordance with FAA-E-2904 STARS System Specification Document (SSD).
3.2.1.2.6.3.3	7	STARS-SSD-01649	Dedicated SIO serial channels shall[7] be used to provide the test radar interface.	7.1.1	7.1.1.4 STARS Test Program must [STARS-534] ensure that the functional and performance requirements have been met in an operational environment in accordance with FAA-E-2904 STARS System Specification Document (SSD).
3.2.1.2.6.3.3	8	STARS-SSD-01650	At the TRACON or RAPCON, all performance verification simulated radars not using the test radar interface shall[8] be injected at the CGW.	7.1.1	7.1.1.4 STARS Test Program must [STARS-534] ensure that the functional and performance requirements have been met in an operational environment in accordance with FAA-E-2904 STARS System Specification Document (SSD).
3.2.1.2.6.3.3	9	STARS-SSD-01651	Performance verification shall[9] employ the same adaptation data set as that used during normal status monitoring of PARROTs, permanent echoes, and RTQC messages.	3.1.1	3.1.1.1 The system must [STARS-001] accept aircraft position and weather data simultaneously from multiple surveillance systems within geographic areas defined by site adaptable (SA) parameters.
3.2.1.2.6.3.4	1	STARS-SSD-01652	At the completion of a performance verification test, a test report shall[1] automatically be generated.	(Derived)	(Derived)
3.2.1.2.6.3.4	2	STARS-SSD-01653	The performance verification test report shall[2] include a summary of the results of the performance verification test.	(Derived)	(Derived)
3.2.1.2.6.3.5	1	STARS-SSD-01654	The performance verification test report shall[1] indicate the deviations from the predefined expected results.	(Derived)	(Derived)
3.2.1.2.6.3.6	1	STARS-SSD-01655	The performance verification test report shall[1] contain a status for each test performed indicating which tests have passed and which tests have failed.	(Derived)	(Derived)

3.2.1.2.6.3.7	1	STARS-SSD-01656	The performance verification test report shall[1] include a date and time stamp.	3.1.11	3.1.11.5 All recorded data must [STARS-175] be time stamped and synchronized to a calibrated national standard time source.
3.2.1.2.6.3.8	1	STARS-SSD-01657	The performance verification test report shall[1] be displayed at the initiating MCP.	(Derived)	(Derived)
3.2.1.2.6.3.8	2	STARS-SSD-01658	The MCP shall[2] be able to print the performance verification report on the network printer.	3.1.12	3.1.12.4 The system must [STARS-184] provide ATC operational information, including graphical plots, in electronic printable form.
3.2.1.2.7	1	STARS-SSD-01659	The ESL time shall[1] be synchronized to an independent GPS Time Source.	3.1.11	3.1.11.5 All recorded data must [STARS-175] be time stamped and synchronized to a calibrated national standard time source.
3.2.1.2.8.1	1	STARS-SSD-01660	All command and data input associated with the monitor and control functions specified in this section shall[1] be accepted at any MCP.	3.1.9	3.1.9.6 The system must [STARS-116] allow for the control of global system information.
3.2.1.2.8.2	1	STARS-SSD-01661	MCP input shall[1] switch ESL between Normal mode and Test Mode without regard to the FSL Test Mode after receiving confirmation from the MCP.	3.1.9	3.1.9.6 The system must [STARS-116] allow for the control of global system information.
3.2.1.2.9.1	1	STARS-SSD-01662	MCP input shall[1] display and print the current status of ESL at operational sites that support ESL.	3.1.12	3.1.12.4 The system must [STARS-184] provide ATC operational information, including graphical plots, in electronic printable form.
3.2.1.2.9.2.1	1	STARS-SSD-01663	The ESL system time shall[1] be displayed at all times on all ESL MCP displays.	(Derived)	(Derived)
3.2.1.2.9.2.2	1	STARS-SSD-01664	ESL shall[1] provide the MCP with a System Status message window that displays the following status monitoring and system control events: a. Notifications generated as a result of resource status monitoring events. b. Informational messages that are generated as a result of invalid system events. c. Informational ATC Operational events that have occurred at a TCP. d. Input events that have occurred at the MCP.	(Derived)	(Derived)
3.2.1.2.9.2.2	2	STARS-SSD-01665	The last 3000 messages or 24 hours worth if less than 3000 are available, shall[2] be displayed in the system status message window.	(Derived)	(Derived)

3.2.1.2.9.2.2	3	STARS-SSD-01666	MCP input shall[3] allow the operator to select all or a subset of system status messages to be printed to the network printer.	3.1.9 3.1.12	3.1.9.6 The system must [STARS-116] allow for the control of global system information. 3.1.12.4 The system must [STARS-184] provide ATC operational information, including graphical plots, in electronic printable form.
3.2.1.2.9.2.2	4	STARS-SSD-01667	Each configured MCP, irrespective of control authority, shall[4] automatically write all Notifications, Informational error messages, and Informational ATC operational events to a system message file on the workstation at which the MCP is configured.	3.1.11	3.1.11.1 The system must [STARS-171] continuously record all input and output messages from internal sources. 3.1.11.2 The system must [STARS-172] continuously record all input and output messages from external sources. 3.1.11.3 The system must [STARS-173] record all data necessary to recreate system status, performance, environment, and situation displays.
3.2.1.2.9.2.2	5	STARS-SSD-01668	A new file shall[5] be created when the MCP is initially configured, and then every twenty four hours at a set time.	3.1.11	3.1.11.1 The system must [STARS-171] continuously record all input and output messages from internal sources. 3.1.11.2 The system must [STARS-172] continuously record all input and output messages from external sources. 3.1.11.3 The system must [STARS-173] record all data necessary to recreate system status, performance, environment, and situation displays.
3.2.1.2.9.2.2	6	STARS-SSD-01669	When a user assumes control authority for ESL, this MCP shall[6] automatically write all MCP inputs to the system message file on all workstations at which the MCP is configured.	3.1.11	3.1.11.1 The system must [STARS-171] continuously record all input and output messages from internal sources.
3.2.1.2.9.2.3	1	STARS-SSD-01670	An indication of the progress of functions requested by MCP input shall[1] be displayed every 5 seconds or less until the function has completed.	(Derived)	(Derived)
3.2.1.2.9.2.4	1	STARS-SSD-01671	A graphic view of the ESL configuration shall[1] be displayed at the ESL MCP.	(Derived)	(Derived)

3.2.1.2.9.2.4	2	STARS-SSD-01672	MCP input shall[2] display and print an ESL System Status Report.	3.1.9 3.1.12	3.1.9.6 The system must [STARS-116] allow for the control of global system information. 3.1.12.4 The system must [STARS-184] provide ATC operational information, including graphical plots, in electronic printable form.
3.2.1.2.9.2.4	3	STARS-SSD-01673	The ESL System Status report shall[3] include an entry for each resource currently configured by ESL.	3.1.12	3.1.12.4 The system must [STARS-184] provide ATC operational information, including graphical plots, in electronic printable form.
3.2.1.2.9.2.5	1	STARS-SSD-01674	All ESL notifications shall[1] be displayed.	(Derived)	(Derived)
3.2.1.2.9.2.6	2	STARS-SSD-01675	All ESL notifications shall[1] be available for display for a period of 24 hours.	(Derived)	(Derived)
3.2.1.2.9.3	1	STARS-SSD-01676	Local MCPs shall[1] display the data associated with ATC operational events.	(Derived)	(Derived)
3.2.1.2.9.3	2	STARS-SSD-01677	Data associated with ATC operational events shall[2] be printed.	3.1.12	3.1.12.4 The system must [STARS-184] provide ATC operational information, including graphical plots, in electronic printable form.

3.2.1.2.10.1	1	STARS-SSD-01678	The ES TAS shall[1] process the workload specified in the following tables: [SEE TABLES]	3.2.8	3.2.8.1 The system must [STARS-281] have the capacity to connect to at least 16 surveillance sensors. 3.2.8.2 The system must [STARS-282] have the capacity to provide a surveillance coverage area of 2048 square nautical miles. 3.2.8.3 The system must [STARS-283] have the capacity to track 3000 (1350 for ELITE) unique aircraft. 3.2.8.4 The system must [STARS-284] have the capacity to track 600 unique associated aircraft. 3.2.8.5 The system must [STARS-285] have the capacity to process 3900 target reports consisting of aircraft and false targets. 3.2.8.6 The system must [STARS-286] have the capacity to process 3100 target reports per second. 3.2.8.7 The system must [STARS-287] have the capacity to handle 1200 Flight Plans. 3.2.8.8 The system must [STARS-288] have the capacity to connect to at least 160 (38 for ELITE) displays. 3.2.8.9 The system must [STARS-289] provide for up to 68 displays to all towers connected to a single TRACON.
3.2.1.2.10.1	2	STARS-SSD-01679	The ES TAS shall[2] accommodate individual capacities as specified in Tables 3.2.1.2.10-1 and 3.2.1.2.10-2.	3.2.8	3.2.8.1 The system must [STARS-281] have the capacity to connect to at least 16 surveillance sensors. 3.2.8.2 The system must [STARS-282] have the capacity to provide a surveillance coverage area of 2048 square nautical miles. 3.2.8.8 The system must [STARS-288] have the capacity to connect to at least 160 (38 for ELITE) displays. 3.2.8.9 The system must [STARS-289] provide for up to 68 displays to all towers connected to a single TRACON.

3.2.1.2.10.2	1	STARS-SSD-01680	The TCW or TDW operating in ES mode shall[1] display the individual data workload specified in the following table: [SEE TABLES]	3.1.10	3.1.10.2 The system must [STARS-132], based upon adaptation, display general information for the facility at each TCP.
3.2.1.2.10.3	1	STARS-SSD-01681	The TCW or TDW operating in ES mode shall[1] display the simultaneous data workload specified in the following table.	3.1.10	3.1.10.2 The system must [STARS-132], based upon adaptation, display general information for the facility at each TCP.
3.2.1.2.10.4.1	1	STARS-SSD-01682	All response time and update rate requirements shall[1] be defined as the values at the 95th percentile.	3.2.8	3.2.8.10 The system must [STARS-290] display input data in 150 milliseconds or less from the time the data was received.
3.2.1.2.10.4.2	1	STARS-SSD-01683	At any workstation, the time from the input of a character to its display shall[1] be less than or equal to 100 milliseconds, while operating with the defined workloads in 3.2.1.2.10.1 and 3.2.1.2.10.3 and maintaining the resource reserves specified in Computer Resources.	3.2.8	3.2.8.10 The system must [STARS-290] display input data in 150 milliseconds or less from the time the data was received.
3.2.1.2.10.4.3	1	STARS-SSD-01684	An indication that a pointing device was actuated shall[1] be provided at displays in 100 milliseconds or less after the device is actuated, while operating with the defined workloads in 3.2.1.2.10.1 and 3.2.1.2.10.3 and maintaining the resource reserves specified in Computer Resources..	3.2.8	3.2.8.10 The system must [STARS-290] display input data in 150 milliseconds or less from the time the data was received.
3.2.1.2.10.4.4	1	STARS-SSD-01685	An indication that a pointing device was moved shall[1] be provided at displays in 100 milliseconds or less after the device is moved, while operating with the defined workloads in 3.2.1.2.10.1 and 3.2.1.2.10.3 and maintaining the resource reserves specified in Computer Resources..	3.2.8	3.2.8.10 The system must [STARS-290] display input data in 150 milliseconds or less from the time the data was received.
3.2.1.2.10.4.5	1	STARS-SSD-01686	Excluding external surveillance errors, the displayed relative target position accuracy of single sensor slant range presentation, including all surveillance processing and display errors shall[1] be within the greater of 0.125 nmi or 0.4% of range scale.	3.2.9	3.2.9.1 Portrayal of the relative position of aircraft on the display must [STARS-301] achieve an accuracy of less than or equal to 0.125 nautical miles or less than or equal to 0.4 percent of range scale.
3.2.1.2.10.4.6	1	STARS-SSD-01687	Local display of target position and data block information shall[1] occur within 1.0 second of receipt of target data by the STARS automation subsystem, while operating with the defined workloads in 3.2.1.2.10.1 and 3.2.1.2.10.3 and maintaining the resource reserves specified in Computer Resources..	3.2.8	3.2.8.11 The system must [STARS-291] display ATC data in 1 second or less from the time the data was received.

3.2.1.2.10.4.7	1	STARS-SSD-01688	Remote display of target position and data block information shall[1] occur within 1.0 second of receipt of target data by the STARS automation subsystem, plus measured delay due to GFE communications devices, while operating with the defined workloads in 3.2.1.2.10.1 and 3.2.1.2.10.3 and maintaining the resource reserves specified in Computer Resources.	3.2.8	3.2.8.11 The system must [STARS-291] display ATC data in 1 second or less from the time the data was received.
3.2.1.2.10.4.8	1	STARS-SSD-01689	Local display at the MCP of single-site event notification shall[1] occur within 3 seconds of the occurrence of each event, while operating with the defined workloads in 3.2.1.2.10.1 and 3.2.1.2.10.3 and maintaining the resource reserves specified in Computer Resources.	(Derived)	(Derived)
3.2.1.2.10.4.9	1	STARS-SSD-01690	Local display at the MCP of all resource and performance verification result reports shall[1] occur within 5 minutes of the completion of any verification test, while operating with the defined workloads in 3.2.1.2.10.1 and 3.2.1.2.10.3 and maintaining the resource reserves specified in Computer Resources.	(Derived)	(Derived)
3.2.1.2.10.4.10	1	STARS-SSD-01691	The functions requested by TCP input from a local workstation shall[1] be completed and the results displayed in 1.2 seconds or less, while operating with the defined workloads in 3.2.1.2.10.1 and 3.2.1.2.10.3 and maintaining the resource reserves specified in Computer Resources.	3.2.8	3.2.8.12 The system must [STARS-292] process operator input in 1.2 seconds or less from the time the input was received.
3.2.1.2.10.4.11	1	STARS-SSD-01692	The functions requested by TCP input from a remote workstation shall[1] be completed and the results displayed in 1.2 seconds or less, plus measured delay due to GFE communication devices, while operating with the defined workloads in 3.2.1.2.10.1 and 3.2.1.2.10.3 and maintaining the resource reserves specified in Computer Resources.	3.2.8	3.2.8.12 The system must [STARS-292] process operator input in 1.2 seconds or less from the time the input was received.

3.2.1.2.10.4.12	1	STARS-SSD-01693	Performance verification shall[1] be completed within 45 minutes of initiation, while operating with the defined workloads in 3.2.1.2.10.1 and 3.2.1.2.10.3 and maintaining the resource reserves specified in Computer Resources.	3.2.8	3.2.8.1 The system must [STARS-281] have the capacity to connect to at least 16 surveillance sensors. 3.2.8.2 The system must [STARS-282] have the capacity to provide a surveillance coverage area of 2048 square nautical miles. 3.2.8.3 The system must [STARS-283] have the capacity to track 3000 (1350 for ELITE) unique aircraft. 3.2.8.4 The system must [STARS-284] have the capacity to track 600 unique associated aircraft. 3.2.8.5 The system must [STARS-285] have the capacity to process 3900 target reports consisting of aircraft and false targets. 3.2.8.6 The system must [STARS-286] have the capacity to process 3100 target reports per second. 3.2.8.7 The system must [STARS-287] have the capacity to handle 1200 Flight Plans. 3.2.8.8 The system must [STARS-288] have the capacity to connect to at least 160 (38 for ELITE) displays. 3.2.8.9 The system must [STARS-289] provide for up to 68 displays to all towers connected to a single TRACON.
3.2.1.2.10.4.13	1	STARS-SSD-01694	The map data display update rate shall[1] be 1000 lines, 200 symbols, 75 arcs and 75 circles per second, while operating with the defined workloads in 3.2.1.2.10.1 and 3.2.1.2.10.3 and maintaining the resource reserves specified in Computer Resources.	3.2.8	3.2.8.11 The system must [STARS-291] display ATC data in 1 second or less from the time the data was received.
3.2.1.2.10.4.14	1	STARS-SSD-01695	Any change to the weather map shall[1] be displayed at the TCW in 30 seconds or less, while operating with the defined workloads in 3.2.1.2.10.1 and 3.2.1.2.10.3 and maintaining the resource reserves specified in Computer Resources.	3.1.1 3.1.10 3.2.8	3.1.1.4 The system must [STARS-004] display digital weather inputs from FAA and DoD air traffic surveillance systems, when available. 3.1.10.16 The system must [STARS-146] display weather data. 3.2.8.10 The system must [STARS-290] display input data in 150 milliseconds or less from the time the data was received.

3.2.1.2.10.4.15	1	STARS-SSD-01696	The change of display between ESL and any other display mode (FSL) information (excluding flight data) shall[1] occur in 500 milliseconds or less after the change is initiated by a TCP, while operating with the defined workloads (excluding flight data) in 3.2.1.2.10.1 and 3.2.1.2.10.3 and maintaining the resource reserves specified in Computer Resources.	3.2.8	3.2.2.4 The system must [STARS-224] switch from FSL to EFSL in no more than 1 second.
3.2.1.2.10.4.16	1	STARS-SSD-01697	Switching the resource state of redundant resources shall[1] be accomplished in five (5) seconds or less, while operating with the defined workloads in 3.2.1.2.10.1 and 3.2.1.2.10.3.	3.3.1 3.3.2	3.3.1.2 The system Mean Time Between Critical Failures (MTBCF) (Full Service) must [STARS-312] be 100,000 hours (for ATC Operational and Monitor & Control (M&C) Functionality failures greater than 5 seconds). 3.3.2.1 The system design must [STARS-321] preclude single point failures, excluding TCWs, MCWs, and TDWs.
3.2.1.2.10.4.17	1	STARS-SSD-01698	Switching from execution of one version of ES automation application software to execution of another version of ES automation application software with restoration of the service level in effect prior to the switch shall[1] take no more than 45 seconds, while operating with the defined workloads in 3.2.1.2.10.1 (exclusive of manually entered messages per Table 3.2.1.2.10-4) and 3.2.1.2.10.3.	(Derived)	(Derived)
3.2.1.2.10.4.18	1	STARS-SSD-01699	Switching between two ESL site adaptation data sets shall[1] take no more than 45 seconds, while operating with the defined workloads in 3.2.1.2.10.1 (exclusive of manually-entered messages per Table 3.2.1.2.10-4) and 3.2.1.2.10.3.	(Derived)	(Derived)
3.2.1.2.10.4.19	1	STARS-SSD-01700	Initialization to ESL shall[1] be accomplished in the following times or less, while operating with the defined workloads in 3.2.1.2.10.1 (exclusive of manually-entered messages per Table 3.2.1.2.10-4) and 3.2.1.2.10.3, unless the operating system did not recover, excluding ESL M&C functionality: a. At TCWs and Local TDWs: sixty (60) seconds b. At Remote TDWs: eighty-four (84) seconds	3.2.2	3.2.2.1 The system must [STARS-221] recover from a power reset to Full Service in no more than 6 minutes. 3.2.2.1 The system must [STARS-221] recover from a power reset to Full Service in no more than 6 minutes.

3.2.1.2.10.4.20	1	STARS-SSD-01701	From the time power is restored, recovery to ESL shall[1] be accomplished in the following times or less, while operating with the defined workloads in 3.2.1.2.10.1 (exclusive of manually-entered messages per Table 3.2.1.2.10-4) and 3.2.1.2.10.3, unless the operating system did not recover, excluding ESL M&C functionality: a. At TCWs and Local TDWs: sixty (60) seconds b. At Remote TDWs: eighty-four (84) seconds	3.2.2	3.2.2.1 The system must [STARS-221] recover from a power reset to Full Service in no more than 6 minutes.
3.2.1.2.10.4.21	1	STARS-SSD-01702	From the time a redundant system resource fails, recovery to ESL level in use at the time of the failure shall[1] be accomplished in five (5) seconds or less, while operating with the defined workloads in 3.2.1.2.10.1 and 3.2.1.2.10.3.	3.3.1 3.3.2	3.3.1.2 The system Mean Time Between Critical Failures (MTBCF) (Full Service) must [STARS-312] be 100,000 hours (for ATC Operational and Monitor & Control (M&C) Functionality failures greater than 5 seconds). 3.3.2.1 The system design must [STARS-321] preclude single point failures, excluding TCWs, MCWs, and TDWs.
3.2.1.2.11.1.1.1	1	STARS-SSD-01703	Access to operating system services shall[1] be available after identification and authentication of the operator.	3.1.14	3.1.14.1 System security must [STARS-201] be in accordance with the FAA and DoD standards identified in Appendix 3.
3.2.1.2.11.1.1.1	2	STARS-SSD-01704	Maintenance access shall[2] be available only upon Identification and Authentication of the operator.	3.1.14	3.1.14.1 System security must [STARS-201] be in accordance with the FAA and DoD standards identified in Appendix 3.
3.2.1.2.11.1.1.2	1	STARS-SSD-01705	The system shall[1] identify and authenticate operators by a login operation for operating system services.	3.1.14	3.1.14.1 System security must [STARS-201] be in accordance with the FAA and DoD standards identified in Appendix 3.
3.2.1.2.11.1.1.2	2	STARS-SSD-01706	Usernames shall[2] have at least 6 characters.	3.1.14	3.1.14.1 System security must [STARS-201] be in accordance with the FAA and DoD standards identified in Appendix 3.
3.2.1.2.11.1.1.3	1	STARS-SSD-01707	The system shall[1] require operators to periodically change authentication information at the time of login.	3.1.14	3.1.14.1 System security must [STARS-201] be in accordance with the FAA and DoD standards identified in Appendix 3.
3.2.1.2.11.1.1.4	1	STARS-SSD-01708	Authentication information (e.g., passwords) shall[1] be modifiable by the operator.	3.1.14	3.1.14.1 System security must [STARS-201] be in accordance with the FAA and DoD standards identified in Appendix 3.
3.2.1.2.11.1.2	1	STARS-SSD-01709	Passwords, when required for access to hosts over the network, shall[1] be protected from disclosure during transmission.	3.1.14	3.1.14.1 System security must [STARS-201] be in accordance with the FAA and DoD standards identified in Appendix 3.

3.2.1.2.11.2.1	1	STARS-SSD-01710	An Audit trail shall[1] be created and maintained for identification and authentication (I&A) security events.	3.1.14	3.1.14.1 System security must [STARS-201] be in accordance with the FAA and DoD standards identified in Appendix 3.
3.2.1.2.11.2.2	1	STARS-SSD-01711	An audit trail shall[1] show traceability of an identification and authentication security event to the individual operator on the local system.	3.1.11 3.1.14	3.1.11.3 The system must [STARS-173] record all data necessary to recreate system status, performance, environment, and situation displays. 3.1.14.1 System security must [STARS-201] be in accordance with the FAA and DoD standards identified in Appendix 3.
3.2.1.2.11.2.3	1	STARS-SSD-01712	The security audit trail shall[1] be protected from unauthorized modification, access, or destruction.	3.1.11 3.1.14	3.1.11.3 The system must [STARS-173] record all data necessary to recreate system status, performance, environment, and situation displays. 3.1.14.1 System security must [STARS-201] be in accordance with the FAA and DoD standards identified in Appendix 3.
3.2.1.2.11.2.3	2	STARS-SSD-01713	The security audit trail records shall[2] be recorded on non-volatile media in real time on a centralized location within the site.	3.1.11 3.1.14	3.1.11.3 The system must [STARS-173] record all data necessary to recreate system status, performance, environment, and situation displays. 3.1.14.1 System security must [STARS-201] be in accordance with the FAA and DoD standards identified in Appendix 3.
3.2.1.2.11.2.4	1	STARS-SSD-01714	The information to be recorded for each operator identification and authentication event shall[1] be: operator ID, date, time, success/failure status, and workstation.	3.1.11 3.1.14	3.1.11.3 The system must [STARS-173] record all data necessary to recreate system status, performance, environment, and situation displays. 3.1.14.1 System security must [STARS-201] be in accordance with the FAA and DoD standards identified in Appendix 3.
3.2.1.2.11.3.1	1	STARS-SSD-01715	Upon operator request, an operating system software configuration baseline on selected equipment shall[1] be generated.	3.1.9	3.1.9.6 The system must [STARS-116] allow for the control of global system information.
3.2.1.2.11.3.1	2	STARS-SSD-01716	A mechanism shall[2] collect the configuration baselines from the selected equipment into the SSS.	3.1.11	3.1.11.3 The system must [STARS-173] record all data necessary to recreate system status, performance, environment, and situation displays.

3.2.1.2.11.3.1	3	STARS-SSD-01717	Upon operator request, a mechanism shall[3] perform a comparison of a collection of configuration baselines with a designated master collection to identify differences.	3.1.9	3.1.9.6 The system must [STARS-116] allow for the control of global system information.
3.2.1.2.11.3.2	1	STARS-SSD-01718	Upon operator request, a configuration baseline on selected network equipment shall[1] be generated.	3.1.9	3.1.9.6 The system must [STARS-116] allow for the control of global system information.
3.2.1.2.11.3.2	2	STARS-SSD-01719	A mechanism shall[2] collect the configuration baselines from the selected network equipment into the SSS.	3.1.11	3.1.11.3 The system must [STARS-173] record all data necessary to recreate system status, performance, environment, and situation displays.
3.2.1.2.11.3.2	3	STARS-SSD-01720	Upon operator request, a mechanism shall[3] perform a comparison of a collection of network configuration baselines with a designated master collection to identify differences.	3.1.9	3.1.9.6 The system must [STARS-116] allow for the control of global system information.
3.2.1.3.1	1	STARS-SSD-01721	The interfacility test function shall[1] generate and communicate messages with the Automation Subsystem in order to test its interfacility message processing functionality, test its interfacility interface operation, and measure interfacility message response times.	(Derived)	(Derived)
3.2.1.3.2.1	1	STARS-SSD-01722	The system shall[1] simulate sensor, multilateration and ADS-B inputs for the purpose of system testing and controller training for FSL in the Automation Subsystem.	(Derived)	(Derived)
3.2.1.3.2.1	2	STARS-SSD-01723	The simulation function shall[2] inject surveillance data at the radar interface of the FSL CGWs with the capability to simulate full or partial failures and provide notification of corresponding failures to TCPs in the training exercise.	(Derived)	(Derived)
3.2.1.3.2.1	3	STARS-SSD-01724	Primary radar and beacon target data with azimuth information and 6 levels of weather shall[3] be available for each simulated sensor.	(Derived)	(Derived)
3.2.1.3.2.1	4	STARS-SSD-01725	Blip/Scan Ratio and Sensor Noise data shall[4] be adjustable for each simulated sensor.	3.1.9	3.1.9.6 The system must [STARS-116] allow for the control of global system information.
3.2.1.3.2.1	5	STARS-SSD-01726	Wind conditions shall[5] be able to be turned on and off, adjustable in speed and direction and apply to all aircraft for all simulated sensors.	3.1.9	3.1.9.6 The system must [STARS-116] allow for the control of global system information.
3.2.1.3.2.1	6	STARS-SSD-01727	The ESL system shall[6] simulate sensor inputs, injected at the CGW, for the purpose of system testing and controller training.	(Derived)	(Derived)
3.2.1.3.2.2	1	STARS-SSD-01728	The simulation function shall[1] provide on-line scenario generation tools and training capability.	(Derived)	(Derived)

3.2.1.3.2.2	2	STARS-SSD-01729	TCWs/TDWs in training mode shall[2] display and manipulate only training data that will have an identical display as that of an operational position.	(Derived)	(Derived)
3.2.1.3.2.2	3	STARS-SSD-01730	The capability of generating system test scenarios shall[3] exist when either the system is undergoing a PV test on-line or is off-line and not accepting live system inputs.	(Derived)	(Derived)
3.2.1.3.2.2	4	STARS-SSD-01731	The simulator shall[4] be capable of executing up to 26 simultaneous scenarios, 24 training, 1 PV & 1 test mode.	(Derived)	(Derived)
3.2.1.3.2.2	5	STARS-SSD-01732	The simulator shall[5] be configurable to support up to 16 pilot roles per training scenario with a role being able to be assigned to either a TCW/TDW or a GPW.	(Derived)	(Derived)
3.2.1.3.2.3	1	STARS-SSD-01733	A specific simulation command shall[1] exist to perform the following functions: a. Initialize or change a targets beacon code b. Designate a target as beacon/radar only or radar/beacon reinforced c. Set criteria for a tracks update rate based on blip/scan ratio d. Simulate an Ident for a specific track e. Enable/disable target position noise in range and azimuth for a specific sensor f. Inhibit radar or beacon target reports for a specific target for a number of scans g. Specify the ARTS Quality field in a specific targets report h. Specify the Target Address or Identification for a Mode S or ADS-B target	3.1.9	3.1.9.6 The system must [STARS-116] allow for the control of global system information.
3.2.1.3.2.3	2	STARS-SSD-01734	Specific ADS-B simulation commands shall[2] exist for the following characteristics: a. Version Number b. Link Technology Indicator c. Integrity and Accuracy parameters d. Pressure Altitude e. Velocity f. Emitter Category g. Target Status	3.1.9	3.1.9.6 The system must [STARS-116] allow for the control of global system information.

3.2.1.3.2.3	3	STARS-SSD-01735	A simulation command shall[3] exist to define default and override default equipage for all targets in a scenario, multiple targets based on beacon codes and a single target.	3.1.9	3.1.9.6 The system must [STARS-116] allow for the control of global system information.
3.2.1.3.2.3	4	STARS-SSD-01736	Simulated targets shall[4] be established using range/azimuth, X/Y, latitude/longitude coordinates or a TCP selected point.	3.1.9	3.1.9.6 The system must [STARS-116] allow for the control of global system information.
3.2.1.3.2.3	5	STARS-SSD-01737	Simulated target commands shall[5] exist to perform the following functions: a. Create any number of duplicate target reports b. Terminate one or more specified simulated targets c. Inhibit a specified target for termination d. Specify a target for automatic final approach and termination with or without specific airport parameters e. Create a ring of symmetrically placed targets based in range and number of targets	3.1.9	3.1.9.6 The system must [STARS-116] allow for the control of global system information.
3.2.1.3.2.3	6	STARS-SSD-01738	Simulated movement commands shall[6] exist for the following purposes: a. Initialize or change a targets altitude/speed or altitude/speed change rate b. Cause targets in a hold pattern at a specified fix to descend an entered distance c. Initialize or change a targets heading, turn rate or direction d. Place a target in a hold pattern at a specified fix for a specified turn direction, rate and outbound leg time e. Place a target in a turn with a specified direction and rate until directed to stop f. Specify an aircraft proceed to one or multiple fixes, return to a specified flight plan route, proceed to a fix and hold or proceed past the last fix g. Cause an aircraft to intercept a specified radial from a NAVAID, then automatically change its heading to follow that radial towards or away from the NAVAID h. Select a target by specifying its call sign, beacon code or slew to its position.	3.1.9	3.1.9.6 The system must [STARS-116] allow for the control of global system information. 3.1.9.7 The system must [STARS-117] allow for the use of context sensitive (implied) functions and user actions.

3.2.1.3.2.3	7	STARS-SSD-01739	The simulation portion of the STARS system shall[7] be capable of the following: a. Accept an entry from any TCP in the simulation environment regardless of speed b. Provide entries to adjust the scenario execution speeds of 0,1,2,4,6,8 & 10 and return with 0 being freeze and 1 being normal scenario operations c. Provide entries to start/terminate a scenario or an aircraft within a scenario d. Provide entries to set training time without affecting operational time as well as backup a scenario to any time in that scenario e. Provide entries to enable/disable sensor, multilateration or ADS-B scenario input f. Executing multiple scenarios concurrently g. Provide an entry to process a student identity, scenario name, site data file, offset time and playback options simultaneously h. Provide a list of scenario file names at a TCP i. Provide an acceptance or rejection response to a simulation command at the TCP with rejection reason if applicable j. Provide a TCP command to display or remove a simulator pilot window at the TCW/TDW k. Provide a scenario command to display pre-defined text message at a pilot window or one or many TCPs.	3.1.9	3.1.9.6 The system must [STARS-116] allow for the control of global system information. 3.1.9.7 The system must [STARS-117] allow for the use of context sensitive (implied) functions and user actions.
3.2.1.3.2.3	8	STARS-SSD-01740	In training or test mode, all simulation commands and operational ATC entries shall[8] be accepted, capable of being stored in a scenario and capable of being entered manually while the scenario is executing.	3.1.9	3.1.9.6 The system must [STARS-116] allow for the control of global system information.
3.2.1.3.2.4	1	STARS-SSD-01741	The simulation function shall[1] execute scenario generation tools.	(Derived)	(Derived)
3.2.1.3.2.4	2	STARS-SSD-01742	The simulation function shall[2] store at least 100 scenarios with an average duration of 60 minutes and define at least 30 aircraft types with default values to model the turn, altitude change, ascent/descent, and speed change rates.	(Derived)	(Derived)
3.2.1.3.2.4	3	STARS-SSD-01743	When explicit target control values are entered for a target, the entered value shall[3] override default values that were assigned based upon the aircraft type.	3.1.9	3.1.9.6 The system must [STARS-116] allow for the control of global system information.

3.2.1.3.2.4	4	STARS-SSD-01744	Continuous Data Recording (CDR) shall[4] capture all events during the execution of a scenario including additional simulation and ATC entries, regardless of the scenario being executed in training or test mode.	3.1.11	3.1.11.1 The system must [STARS-171] continuously record all input and output messages from internal sources. 3.1.11.2 The system must [STARS-172] continuously record all input and output messages from external sources. 3.1.11.3 The system must [STARS-173] record all data necessary to recreate system status, performance, environment, and situation displays. 3.1.11.4 All operational data, including hardware configuration, must [STARS-174] be recorded on a removable, nonvolatile electronic medium. 3.1.11.5 All recorded data must [STARS-175] be time stamped and synchronized to a calibrated national standard time source.
3.2.1.3.2.4	5	STARS-SSD-01745	Playback of a recorded exercise shall[5] cause the entries to be executed at the appropriate time, at the originally entered position with the results displayed at the associated TCP	3.1.12	3.1.12.2 The recorded data must [STARS-182] be capable of being played back within 5 minutes of the request for playback. 3.1.12.3 The recorded data must [STARS-183] be played back without interference or interaction with the live operational system.
3.2.1.3.2.5	1	STARS-SSD-01746	The simulator shall[1] send and receive Interfacility commands with the STARS system as though it were an ARTCC or an adjacent TRACON attached via an Interfacility connection.	(Derived)	(Derived)
3.2.1.3.2.5	2	STARS-SSD-01747	Simulator commands shall[2] exist to perform all of the interaction associated with flight data between the ARTCC and the STARS system	3.1.9	3.1.9.4 The system must [STARS-114] provide the controller with control over flight plan information.
3.2.1.3.2.5	3	STARS-SSD-01748	While the simulator is acting as the ARTCC it shall[3] also provide a visual indication to the situation displays and tabular displays.	3.1.10	3.1.10.3 The system must [STARS-133] based upon adaptation, display the general status of the system at each TCP.
3.2.1.3.2.5	4	STARS-SSD-01749	Unless inhibited by scenario command, the simulator shall[4] automatically accept a pointout, as well as, recall a handoff or pointout if not accepted within a scenario defined period of time.	3.1.9	3.1.9.3 The system must [STARS-113] provide for controller manipulation of tracked aircraft status.

3.2.1.3.3.1	1	STARS-SSD-01750	Operator input shall[1] select previously recorded information for DR&A Data Class Extraction based on data extraction	3.1.9 3.1.11	3.1.9.6 The system must [STARS-116] allow for the control of global system information. 3.1.11.3 The system must [STARS-173] record all data necessary to recreate system status, performance, environment, and situation displays. 3.1.11.4 All operational data, including hardware configuration, must [STARS-174] be recorded on a removable, nonvolatile electronic medium. 3.1.11.5 All recorded data must [STARS-175] be time stamped and synchronized to a calibrated national standard time source.
3.2.1.3.3.1	2	STARS-SSD-01751	Operator input shall[2] allow the user to specify the data extracted with one or more of the following filter options: a. Time b. TCP (interchangeably referred to as CJI) c. Altitude d. ACID e. Mode 2 or 3/A Beacon Code f. Range g. Azimuth h. System Coordinates i. IF Message Types or Source j. MCW Message Types k. Exercise Number l. Sensor m. Target Type Filter n. AIG Message ID o. Aircraft Address p. Target Identification q. Altimeter Station r. ATPA Approach Volume ID or State Operator input shall[2] allow the user to specify the data extracted with one or more of the following filter options: a. Time b. TCP (interchangeably referred to as CJI) c. Altitude d. ACID e. Mode 2 or 3/A Beacon Code f. Range g. Azimuth h. System Coordinates i. IF Message Types or Source j. MCW Message Types k. Exercise Number l. Sensor m. Target Type Filter n. AIG Message ID o. Aircraft Address p. Target Identification q. Altimeter Station r. ATPA Approach Volume ID or State	3.1.9 3.1.11	3.1.9.6 The system must [STARS-116] allow for the control of global system information. 3.1.11.3 The system must [STARS-173] record all data necessary to recreate system status, performance, environment, and situation displays. 3.1.11.4 All operational data, including hardware configuration, must [STARS-174] be recorded on a removable, nonvolatile electronic medium. 3.1.11.5 All recorded data must [STARS-175] be time stamped and synchronized to a calibrated national standard time source.

3.2.1.3.3.1	3	STARS-SSD-01752	Operator input shall[3] select for DR&A Data Class Extraction information recorded from the current or previous two software builds.	3.1.9 3.1.11	3.1.9.6 The system must [STARS-116] allow for the control of global system information. 3.1.11.3 The system must [STARS-173] record all data necessary to recreate system status, performance, environment, and situation displays. 3.1.11.4 All operational data, including hardware configuration, must [STARS-174] be recorded on a removable, nonvolatile electronic medium. 3.1.11.5 All recorded data must [STARS-175] be time stamped and synchronized to a calibrated national standard time source.
3.2.1.3.3.2	1	STARS-SSD-01753	Operator input shall[1] direct a portion or all of CDR data to, as well as, perform DR&A Extraction from any local or networked disk storage device.	3.1.9 3.1.11	3.1.9.6 The system must [STARS-116] allow for the control of global system information. 3.1.11.3 The system must [STARS-173] record all data necessary to recreate system status, performance, environment, and situation displays. 3.1.11.4 All operational data, including hardware configuration, must [STARS-174] be recorded on a removable, nonvolatile electronic medium. 3.1.11.5 All recorded data must [STARS-175] be time stamped and synchronized to a calibrated national standard time source.
3.2.1.3.3.2	5	STARS-SSD-01754	The system shall[5] permit record and DR&A activities to occur simultaneously	3.1.11	3.1.11.3 The system must [STARS-173] record all data necessary to recreate system status, performance, environment, and situation displays. 3.1.11.4 All operational data, including hardware configuration, must [STARS-174] be recorded on a removable, nonvolatile electronic medium. 3.1.11.5 All recorded data must [STARS-175] be time stamped and synchronized to a calibrated national standard time source.

3.2.1.3.3.3	1	STARS-SSD-01755	The DR&A function shall[1] include CAS spreadsheet	3.1.11	3.1.11.3 The system must [STARS-173] record all data necessary to recreate system status, performance, environment, and situation displays. 3.1.11.5 All recorded data must [STARS-175] be time stamped and synchronized to a calibrated national standard time source.
3.2.1.3.3.3	2	STARS-SSD-01756	The DR&A data classes shall[2] include the following classes: 1 Report Header Data Class 1A Adaptation Header Data Class 1L FDIO Data Class 2 Keyboard Entries (track/flight plan related) Data Class 2X Response (track/flight plan related) Data Class 3 Keyboard Entries (display presentation change related) Data Class 3X Keyboard Responses (display presentation change related) Data Class 4 Automatic Functions Data Class 5 Raw Target Reports Data Class 5A Raw ADS-B Target Reports Data Class 5H Raw Target Reports Hex Dump Data Class 6 Corrected Target Reports for Display Data Class 6H Corrected Target Reports Hex Dump Data Class 7 Tracking Data Class 7H Tracking Hex Dump Data Class 7PA Proximity Alert Data Class 8 Flight Plan Data Class 9 Interfacility Data Class 10 TFMS Data Class 11 Registration and Collimation Correction Factors Data Class 12 Strobe Data Class 13 MSAW Data Class 14 CA/MCI Data Class 15 Weather Data Class 16 MCW Keyboard Entries Data Class 16X MCW Response Data Class 17 MCW System Status Message Data Class 18 Ghost Data Class 19 Security Data Class 20 AIG Data Class 21 Summarization Statistics Report Data Class 22 System Status Report Data Class 23 Verification Report Data Class 25 FMA Data Class 26 ABPE Data Class 27 ADS-B Statistics Data 28 Aural Alarm Data Class 30 Composite Weather Data Class 31 Target Report Summary Data Class 32 Sensor Status Report Data Class 33 Registration Report Data Class 34 RTQC Check Report Data Class 35 PARROT/PE Report Data Class	3.1.11	3.1.11.3 The system must [STARS-173] record all data necessary to recreate system status, performance, environment, and situation displays. 3.1.11.5 All recorded data must [STARS-175] be time stamped and synchronized to a calibrated national standard time source.

3.2.1.3.3.4	1	STARS-SSD-01757	The following data classes shall[1] each be written to separate files: a. Summarization Statistics Report Data Class b. System Status Report Data Class c. Verification Report Data Class d. Target Report Summary Data Class e. Sensor Status Report Data Class f. Registration Report Data Class g. RTQC Check Report Data Class h. PARROT/PE Report Data Class	3.1.11	3.1.11.3 The system must [STARS-173] record all data necessary to recreate system status, performance, environment, and situation displays. 3.1.11.4 All operational data, including hardware configuration, must [STARS-174] be recorded on a removable, nonvolatile electronic medium. 3.1.11.5 All recorded data must [STARS-175] be time stamped and synchronized to a calibrated national standard time source.
3.2.1.3.3.4	2	STARS-SSD-01758	All other data classes shall[2] be written to a single Data Class Extraction File with the following format: a. Each record will contain all the elements in the order defined for the data class b. All elements are ASCII text strings c. Each element in a record will be separated by ASCII “Tab” characters. d. Each Record will be terminated by an ASCII “Carriage Return” character.	3.1.11	3.1.11.3 The system must [STARS-173] record all data necessary to recreate system status, performance, environment, and situation displays. 3.1.11.4 All operational data, including hardware configuration, must [STARS-174] be recorded on a removable, nonvolatile electronic medium. 3.1.11.5 All recorded data must [STARS-175] be time stamped and synchronized to a calibrated national standard time source.

3.2.1.3.3.4	3	STARS-SSD-01759	The DR&A Function shall[3] output a report containing the Report Header Data Class information, the Adaptation Header Data Class information, and a tabular listing of the following data classes: a. FDIO Data Class 1L b. Keyboard Entries (track/flight plan related) Data Class 2 c. Response (track/flight plan related) Data Class 2X d. Keyboard Entries (display presentation change related) Data Class 3 e. Keyboard Responses (display presentation change related) Data Class 3X f. Automatic Functions Data Class 4 g. Raw Target Reports Data Class 5 h. Raw ADS-B Target Reports Data Class 5A i. Corrected Target Reports for Display Data Class 6 j. Tracking Data Class 7 k. Proximity Alert Data Class 7PA l. Flight Plan Data Class 8 m. Interfacility Data Class 9 n. TFMS Data Class 10 o. Registration and Collimation Correction Factors Data Class 11 p. Strobe Data Class 12 q. MSAW Data Class 13 r. CA/MCI Data Class 14 s. Weather Data Class 15 t. MCW Keyboard Entries Data Class 16 u. MCW Response Data Class 16X v. MCW System Status Message Data Class 17 w. Security Data Class 19 x. Ghost Data Class 18 y. AIG Data Class 20 z. FMA Data Class 25 aa. ABPE Data Class 26 bb. ADS-B Statistics Data Class 27 cc. Aural Alarm Data Class 28 dd. Composite Weather Data Class 30	3.1.11 3.1.12	3.1.11.3 The system must [STARS-173] record all data necessary to recreate system status, performance, environment, and situation displays. 3.1.11.4 All operational data, including hardware configuration, must [STARS-174] be recorded on a removable, nonvolatile electronic medium. 3.1.11.5 All recorded data must [STARS-175] be time stamped and synchronized to a calibrated national standard time source. 3.1.12.4 The system must [STARS-184] provide ATC operational information, including graphical plots, in electronic printable form.
3.2.1.3.3.5	1	STARS-SSD-01760	The DR&A Function shall[1] create a Plot File format file.	3.1.12	3.1.12.4 The system must [STARS-184] provide ATC operational information, including graphical plots, in electronic printable form.
3.2.1.3.3.5	2	STARS-SSD-01761	Each record in the Plot File shall[2] contain the following elements (type of record shown for reference only): - (table is listed in SSD) RAPTOR raw target records will include uncorrelated radar only, beacon only, and radar reinforced beacon reports, including PARROTs and PEs. RAPTOR track and plot records will include tracked targets and plots, and their flight plan, MSAW alert, CA/MCI alert, and system wide inhibit data. RAPTOR TAM (time alignment message) records will indicate end of scan for that sensor.	3.1.12	3.1.12.4 The system must [STARS-184] provide ATC operational information, including graphical plots, in electronic printable form.

3.2.1.3.3.5	4	STARS-SSD-01762	The DR&A function shall[4] present a list of radars and the point of tangency at the site that recorded the CDR data and require the user to select a reference point. This reference point will be used to define the origin position for the "x" and "y" position elements and for the range and azimuth filters.	3.1.9 3.1.11	3.1.9.6 The system must [STARS-116] allow for the control of global system information. 3.1.11.3 The system must [STARS-173] record all data necessary to recreate system status, performance, environment, and situation displays. 3.1.11.5 All recorded data must [STARS-175] be time stamped and synchronized to a calibrated national standard time source.
3.2.1.3.3.5	5	STARS-SSD-01763	The DR&A function shall[5] allow the user to specify the data extracted with one or more of the following filter options: a. Time b. ACID c. Mode 2 or 3/A Beacon Code d. Track File Number e. Exercise Number f. Sensor g. Raw Target h. Track and Plot i. Range j. Azimuth k. TCP l. Altitude m. System Area Code/System Identity Code n. Target Address o. Target Identification p. Emitter Category q. Integrity and Accuracy r. ADS-B Target Status	3.1.9	3.1.9.6 The system must [STARS-116] allow for the control of global system information.

3.2.1.3.3.5	6	STARS-SSD-01764	The DR&A function shall[6] include a Plot/Playback File Header record at the start of the extracted records containing the following information: a. Date and time of the Plot File creation. b. Input device. c. Site ID from Recorded Data. d. Software Build list from recorded data. e. Adaptation Build list from recorded data. f. System Mode from recorded data. g. System ID from recorded data. h. System Service Level from recorded data. i. UTC at start of recorded data. j. System Time at start of recorded data. k. User specified comments. l. Output file path name. m. Site adapted sensors with their positions in X, Y coordinates relative to the Selected reference Point. n. Selected reference point in Lat/Long coordinates. o. Filters selected	3.1.12	3.1.12.4 The system must [STARS-184] provide ATC operational information, including graphical plots, in electronic printable form.
3.2.1.3.3.6	1	STARS-SSD-01765	DR&A shall[1] cause specified CDR data to be copied to the SSS hard disk so that it can be used to reconstitute CDR data at a TCW/TDW.	3.1.11 3.1.12	3.1.11.4 All operational data, including hardware configuration, must [STARS-174] be recorded on a removable, nonvolatile electronic medium. 3.1.12.1 The system must [STARS-181] play back recorded data to one or more TCWs. 3.1.12.4 The system must [STARS-184] provide ATC operational information, including graphical plots, in electronic printable form.
3.2.1.3.3.7	1	STARS-SSD-01766	The DR&A Function shall[1] create a Tracking Performance File containing the following information with at least one of each of the headers present: a. Version Header b. System Parameter Header c. Radar Parameter Header d. Radar Data Message e. Radar Update Message f. Label Update Message	3.1.11	3.1.11.4 All operational data, including hardware configuration, must [STARS-174] be recorded on a removable, nonvolatile electronic medium.
3.2.1.3.3.7	3	STARS-SSD-01767	The Tracking Performance File shall[3] have a header defining its type and length and records written in binary data.	3.1.11	3.1.11.4 All operational data, including hardware configuration, must [STARS-174] be recorded on a removable, nonvolatile electronic medium.

3.2.1.3.3.7	4	STARS-SSD-01768	Version Header records shall[4] contain the following elements: a. Date and time of the Tracking Performance File creation. b. Input device. c. Site ID from recorded data. d. Software Build list(s) from recorded data. e. Adaptation Build list(s) and kick list from recorded data. f. System Mode from recorded data. g. System ID from recorded data. h. System Service Level from recorded data. i. UTC at start of recorded data. j. System Time at start of recorded data. k. User specified comments. l. Output file path name. m. Filters selected	3.1.11	3.1.11.3 The system must [STARS-173] record all data necessary to recreate system status, performance, environment, and situation displays. 3.1.11.4 All operational data, including hardware configuration, must [STARS-174] be recorded on a removable, nonvolatile electronic medium.
3.2.1.3.3.7	5	STARS-SSD-01769	System Parameter Header records shall[5] contain the following elements: a. Time Of Record (recorded) b. Time Of Record (origination) c. Point Of Tangency - x position d. Point Of Tangency - y position e. Point Of Tangency – Latitude f. Point Of Tangency – Longitude g. Earth Radius At Point Of Tangency h. Mosaic Tileset Origin - x position i. Mosaic Tileset Origin - y position	3.1.11	3.1.11.3 The system must [STARS-173] record all data necessary to recreate system status, performance, environment, and situation displays. 3.1.11.4 All operational data, including hardware configuration, must [STARS-174] be recorded on a removable, nonvolatile electronic medium.

3.2.1.3.3.7	6	STARS-SSD-01770	Radar Parameter Header records shall[6] contain the following elements: a. Time Of Record (recorded) b. Time Of Record (origination) c. NUNIO Port Mapping d. Number of Adapted Sensors For each adapted sensor: 1. Sensor Number 2. Sensor ID (name) 3. System Area Code/System Identity Code 4. High Update Rate 5. Low Update Rate 6. Sensor Type 7. Dynamic Bias Correction Processing Enable/Disable 8. Sensor - x position 9. Sensor - y position 10. Sensor - Height (amsl) 11. Beta Value 12. NorthMark Correction 13. Registration Range 14. Registration Azimuth 15. Collimation Range 16. Collimation Azimuth 17. Quality Filter Enabled 18. Confidence Filter Enabled 19. Quality Filter Threshold 20. Confidence Filter Value 21. PSR Range Accuracy 22. SSR Range Accuracy 23. PSR Azimuth Accuracy 24. SSR Azimuth Accuracy 25. PAM Enabled Indicator 26. Data Smoothed Indicator 27. Track Initiation Indicator 28. Search RTQC Range 29. Search RTQC Azimuth 30. Beacon RTQC Range 31. Beacon RTQC Azimuth 32. Beacon RTQC Mode 3/A 33. Beacon RTQC Mode C 34. PE #1 Range 35. PE #1 Azimuth 36. PE #2 Range 37. PE #2 Azimuth 38. PE #3 Range 39. PE #3 Azimuth 40. PARROT #1 Range 41. PARROT #1 Azimuth 42. PARROT #1 Mode 3/A 43. PARROT #1 Mode C 44. PARROT #2 Range 45. PARROT #2 Azimuth 46. PARROT #2 Mode 3/A 47. PARROT #2 Mode C	3.1.11	3.1.11.3 The system must [STARS-173] record all data necessary to recreate system status, performance, environment, and situation displays. 3.1.11.4 All operational data, including hardware configuration, must [STARS-174] be recorded on a removable, nonvolatile electronic medium.

3.2.1.3.3.7	7	STARS-SSD-01771	Radar Data Message records shall[7] contain the following elements: a. Time Of Record (recorded) b. Time Of Record (origination) c. Data Length d. Seconds e. Radar Data	3.1.11	3.1.11.2 The system must [STARS-172] continuously record all input and output messages from external sources. 3.1.11.3 The system must [STARS-173] record all data necessary to recreate system status, performance, environment, and situation displays. 3.1.11.4 All operational data, including hardware configuration, must [STARS-174] be recorded on a removable, nonvolatile electronic medium.
3.2.1.3.3.7	8	STARS-SSD-01772	Radar Update Message records shall[8] contain the following elements: a. Time Of Record (recorded) b. Time Of Record (origination) c. Coast State d. Confidence e. Double Coded f. Drop Track Flag g. Dynamic Bias Correction Altitude Bias h. Dynamic Bias Correction System X Coordinate Bias i. Dynamic Bias Correction System Y Coordinate Bias j. Eligibility k. Eligible Display Modes l. Exercise Number m. Flight ACID n. Flight Plan Associated o. PARROT Flag p. PSR Correlated q. PSR/SSR Combined r. PE Flag s. Plot/Track Flag t. Pressure Corrected filter-Checking Altitude u. RTQC Flag v. Radar Heading w. Radar Reference x. Radar Speed y. Registration Eligibility Flag z. Report State aa. Reported Mode 2 Code bb. Reported SSR Code cc. Reported Altitude dd. Reported Target Azimuth ee. Reported Target Range ff. Special Position Indicator gg. System Plane X Coordinate hh. System Plane Y Coordinate ii. System Track Number jj. Target Report Time Stamp kk. Tentative Track Flag ll. Test Target Flag mm. Track Not SSR Supported nn. Track Time oo. Tracking Eligibility pp. Uncorrected Altitude Report qq. Unreasonable Altitude Change Rate rr. X Velocity Smoothed ss. Y Velocity Smoothed	3.1.11	3.1.11.2 The system must [STARS-172] continuously record all input and output messages from external sources. 3.1.11.3 The system must [STARS-173] record all data necessary to recreate system status, performance, environment, and situation displays. 3.1.11.4 All operational data, including hardware configuration, must [STARS-174] be recorded on a removable, nonvolatile electronic medium.

			tt. Aircraft Address uu. Target Identification vv. Time of Day ww. System Area Code / System Identity Code xx. Emitter Category		

3.2.1.3.3.7	9	STARS-SSD-01773	Label Update Message records shall[9] contain the following elements: a. Time Of Record (recorded) b. Time Of Record (origination) c. CA Pair Inhibited d. CA Single Inhibited e. CA Assigned Altitude Conformance Alert Inhibited f. CJS g. Coast State h. Drop Track Flag i. Established Altitude j. Established SSR Code k. Exercise Number l. Filtered Speed m. Filtered Heading n. Flight ACID o. Flight Type p. Flight Plan Associated q. Local Sourced Track r. MSAW Inhibited s. MSAW/CA t. Radar Reference u. Report Message Timestamp v. SPC Code w. SPC State x. Smoothed X Coordinate y. Smoothed Y Coordinate z. Synthetic Track aa. System Track Number bb. Tag Update Request cc. Track Ambiguity dd. Track Time ee. Vertical Velocity ff. X Smoothed Velocity gg. Y Smoothed Velocity	3.1.11	3.1.11.3 The system must [STARS-173] record all data necessary to recreate system status, performance, environment, and situation displays. 3.1.11.4 All operational data, including hardware configuration, must [STARS-174] be recorded on a removable, nonvolatile electronic medium.
3.2.1.3.3.7	10	STARS-SSD-01774	The DR&A Tracking Performance File Generation function shall[10] allow the user to specify the data extracted by a specified range of time and/or specified exercise number(s).	3.1.9 3.1.12	3.1.9.6 The system must [STARS-116] allow for the control of global system information. 3.1.12.4 The system must [STARS-184] provide ATC operational information, including graphical plots, in electronic printable form.
3.2.1.3.3.8	1	STARS-SSD-01775	The DR&A Function shall[1] allow the user to transfer data between any storage media available to that system.	3.1.9 3.1.11	3.1.9.6 The system must [STARS-116] allow for the control of global system information. 3.1.11.4 All operational data, including hardware configuration, must [STARS-174] be recorded on a removable, nonvolatile electronic medium.
3.2.1.3.4.1	1	STARS-SSD-01776	Utilities and tools shall[1] execute to detect and localize software faults and failures.	(Derived)	(Derived)

3.2.1.3.4.1	2	STARS-SSD-01777	Diagnostics shall[2] execute to detect, and localize to the LRU, hardware faults and failures.	9.2.4	9.2.4.1 STARS must [STARS-661] continuously monitor, log, and record the health of STARS including telecommunications, components, external interfaces, and system services.
3.2.1.3.4.1	3	STARS-SSD-01778	Based on adaptation, utilities and tools shall[3] be capable of modifying the MSAW altitude data.	3.1.6	3.1.6.2 The system must [STARS-072] detect unsafe proximity between an associ¬ated tracked aircraft and the terrain map using valid altitude in¬formation from the altitude tracker, or from manu-ally-entered assigned altitude when Mode-C data from the aircraft is not available.
3.2.1.3.4.1	4	STARS-SSD-01779	Tools shall[4] provide the capability to restore the previous FSL or ESL software and adaptation version.	3.2.1	3.2.1.1 Full Service: All operational functionality and capacity must [STARS-211] be available at each local and remote TCP. 3.2.1.2 Emergency Full Service: All operational functionality and capacity must [STARS-212] be available at each local and remote TCP.
3.2.1.3.4.2	1	STARS-SSD-01780	Software run time errors shall[1] be detected, localized and reproduced in the environment in which the error occurred.	3.1.11 3.1.12	3.1.11.6 The system must [STARS-176] continuously record all critical data required for recovery. 3.1.13.3 The recorded data must [STARS-183] be played back without interference or interaction with the live operational system.
3.2.1.3.4.2	2	STARS-SSD-01781	Pertinent data necessary to analyze faults and failures shall[2] be saved after the occurrence of a run time error	3.1.11 3.1.12	3.1.11.6 The system must [STARS-176] continuously record all critical data required for recovery. 3.1.13.3 The recorded data must [STARS-183] be played back without interference or interaction with the live operational system.
3.2.1.3.4.2	3	STARS-SSD-01782	The STARS system shall[3] store up to three sets of software and adaptation as well as support the installation of any of these to the system.	3.3.2	3.3.2.1 The system design must [STARS-321] preclude single point failures, excluding TCWs, MCWs, and TDWs.

3.2.1.3.4.2	4	STARS-SSD-01783	The Site Support maintenance subsystem shall[4] be capable of performing the following: a. Transition processors from one System Archive version to another b. Download a new System Archive Release to the SSS and then to any subsystem computer c. Create a STARS System Image and switch subsystem computers to that image d. Generate a replacement processor from a non-operational subsystem computer e. Initialize the Site Support Server directly from electronic media f. Download new STARS Installation Data to the SSS and then to any subsystem computer.	(Derived)	(Derived)
3.2.1.3.4.3	1	STARS-SSD-01784	All diagnostic results shall[1] be saved for future evaluation.	3.1.11	3.1.11.3 The system must [STARS-173] record all data necessary to recreate system status, performance, environment, and situation displays. 3.1.11.4 All operational data, including hardware configuration, must [STARS-174] be recorded on a removable, nonvolatile electronic medium.
3.2.1.3.5	1	STARS-SSD-01785	The Operational Site Support time shall[1] be set using GPS time as the source.	(Derived)	(Derived)
3.2.1.3.6	1	STARS-SSD-01786	The simulation function shall[1] concurrently support Training and Test capabilities and support tracked aircraft and flight plans at the workload levels plus an additional 20% simulated aircraft.	(Derived)	(Derived)
3.2.2.1	1	STARS-SSD-01787	The SCSC shall[1] be located at the FAATC. The OSF Support System can be located anywhere but is usually near an OSF.	(Derived)	(Derived)
3.2.2.2	1	STARS-SSD-01788	The SCSC maintenance subsystem shall[1] simultaneously provide a Software Development Configuration (SDC) or Software Maintenance System (SMS) and a Field Support Configuration (FSC) or Terminal Automation System (TAS).	9.1.6	9.1.6.2 All adaptive, perfective, and corrective STARS software maintenance including site adaptation, must [STARS-622] be maintained under FAA management via maintenance personnel located at the SCSC as well as at the OSFs.
3.2.2.2	2	STARS-SSD-01789	The OSF maintenance subsystem shall[2] simultaneously provide a Software Maintenance Configuration (SMC) and a Software Test Configuration (STC).	9.1.6	9.1.6.2 All adaptive, perfective, and corrective STARS software maintenance including site adaptation, must [STARS-622] be maintained under FAA management via maintenance personnel located at the SCSC as well as at the OSFs.

3.2.2.2	3	STARS-SSD-01790	SCSC software development activities shall[3] be autonomous from SCSC field support activities.	9.1.6	9.1.6.2 All adaptive, perfective, and corrective STARS software maintenance including site adaptation, must [STARS-622] be maintained under FAA management via maintenance personnel located at the SCSC as well as at the OSFs.
3.2.2.3	1	STARS-SSD-01791	At least three complete versions of Tools Menu software shall[1] be stored on the remote maintenance subsystems non-volatile electronic media.	(Derived)	(Derived)
3.2.2.4	1	STARS-SSD-01792	The SCSC and OSF Support subsystems shall[1] be capable to support the loading and storage of both STARS adaptation and software data in normal, compressed, or encrypted format from approved media.	9.1.6	9.1.6.2 All adaptive, perfective, and corrective STARS software maintenance including site adaptation, must [STARS-622] be maintained under FAA management via maintenance personnel located at the SCSC as well as at the OSFs.
3.2.2.5	1	STARS-SSD-01793	The SDC shall[1] support all software maintenance activities necessary to develop and implement new software releases, perform system wide adaptation, perform software configuration management and develop and implement Software Change Proposals (SCPs).	9.1.6	9.1.6.2 All adaptive, perfective, and corrective STARS software maintenance including site adaptation, must [STARS-622] be maintained under FAA management via maintenance personnel located at the SCSC as well as at the OSFs.
3.2.2.5	2	STARS-SSD-01794	The SDC shall[2] support developmental software activities, including source code generation, editing, compiling, building, debugging, DR&A, and testing of new functions and releases.	9.1.6	9.1.6.3 The STARS program must [STARS-623] support the testing, verification, and validation of all software releases to ensure they meet the requirements for operational use. These capabilities apply to all aspects of the STARS system such as operations, training, maintenance, and other software functionality or programs.
3.2.2.5	3	STARS-SSD-01795	The SDC shall[3] support the development, testing, implementation and distribution of system-wide STARS adaptations, comprising STARS software and system-wide adaptation files.	9.1.6	9.1.6.3 The STARS program must [STARS-623] support the testing, verification, and validation of all software releases to ensure they meet the requirements for operational use. These capabilities apply to all aspects of the STARS system such as operations, training, maintenance, and other software functionality or programs.
3.2.2.5	4	STARS-SSD-01796	The SDC shall[4] support the validation and distribution of baseline or incremental software upgrades, and their related documentation, as well as defining and listing content of a package.	9.1.6	9.1.6.3 The STARS program must [STARS-623] support the testing, verification, and validation of all software releases to ensure they meet the requirements for operational use. These capabilities apply to all aspects of the STARS system such as operations, training, maintenance, and other software functionality or programs.

3.2.2.5	5	STARS-SSD-01797	The SDC shall[5] provide a means to archive, purge and restore a package as well as provide information on the package like user name, date/time and comments.	9.1.6	9.1.6.2 All adaptive, perfective, and corrective STARS software maintenance including site adaptation, must [STARS-622] be maintained under FAA management via maintenance personnel located at the SCSC as well as at the OSFs.
3.2.2.5	6	STARS-SSD-01798	The SDC shall[6] store at least 3 sets of application and maintenance utility source code, CAS component files and adaptation parameter source files on electronic medium.	9.1.6	9.1.6.2 All adaptive, perfective, and corrective STARS software maintenance including site adaptation, must [STARS-622] be maintained under FAA management via maintenance personnel located at the SCSC as well as at the OSFs.
3.2.2.5	7	STARS-SSD-01799	The SDC shall[7] provide Configuration Management of all software and adaptation with the ability to track, display and provide security on all changes.	9.1.6	9.1.6.3 The STARS program must [STARS-623] support the testing, verification, and validation of all software releases to ensure they meet the requirements for operational use. These capabilities apply to all aspects of the STARS system such as operations, training, maintenance, and other software functionality or programs.
3.2.2.5	8	STARS-SSD-01800	The SDC shall[8] support the identification, analysis, validation, design, development, testing and documentation of Software Change Proposal's (SCP).	9.1.6	9.1.6.3 The STARS program must [STARS-623] support the testing, verification, and validation of all software releases to ensure they meet the requirements for operational use. These capabilities apply to all aspects of the STARS system such as operations, training, maintenance, and other software functionality or programs.
3.2.2.5	9	STARS-SSD-01801	The SDC shall[9] support all system flash archive creation and maintenance activities necessary to develop and implement new system flash archive releases, perform system flash archive configuration management and develop and implement Software Change Proposals (SCPs).	9.1.6	9.1.6.2 All adaptive, perfective, and corrective STARS software maintenance including site adaptation, must [STARS-622] be maintained under FAA management via maintenance personnel located at the SCSC as well as at the OSFs.
3.2.2.6	1	STARS-SSD-01802	The FSC shall[1] support all maintenance activities necessary to complete software or hardware discrepancy identification, problem resolution, testing and configuration management, and PTR/HDR identification, resolution, and testing.	9.1.6	9.1.6.2 All adaptive, perfective, and corrective STARS software maintenance including site adaptation, must [STARS-622] be maintained under FAA management via maintenance personnel located at the SCSC as well as at the OSFs.
3.2.2.6	2	STARS-SSD-01803	The FSC shall[2] replicate the automation functionality of any site, as well as, collect, maintain, store and support the resolution of PTRs.	9.1.6	9.1.6.2 All adaptive, perfective, and corrective STARS software maintenance including site adaptation, must [STARS-622] be maintained under FAA management via maintenance personnel located at the SCSC as well as at the OSFs.

3.2.2.6	3	STARS-SSD-01804	An integrated computer-based tool shall[3] execute at the SCSC to trace system requirements from the functional/performance requirement level to the computer software unit level and vice versa.	9.1.6	9.1.6.2 All adaptive, perfective, and corrective STARS software maintenance including site adaptation, must [STARS-622] be maintained under FAA management via maintenance personnel located at the SCSC as well as at the OSFs.
3.2.2.6	4	STARS-SSD-01805	Each STARS automation subsystem shall[4] support installation of the site adapted software, contained in a package, on target equipment on the test automation subsystem at the SCSC.	9.1.6	9.1.6.2 All adaptive, perfective, and corrective STARS software maintenance including site adaptation, must [STARS-622] be maintained under FAA management via maintenance personnel located at the SCSC as well as at the OSFs.
3.2.2.7	1	STARS-SSD-01806	The SMC shall[1] support all OSF software maintenance activities necessary to maintain site adaptation, install new software releases, perform DR&A, and identify/verify PTRs.	9.1.6	9.1.6.2 All adaptive, perfective, and corrective STARS software maintenance including site adaptation, must [STARS-622] be maintained under FAA management via maintenance personnel located at the SCSC as well as at the OSFs.
3.2.2.8	1	STARS-SSD-01807	The STC shall[1] support all OSF software testing activities necessary to maintain site adaptation, install new software releases, identify & verify PTRs, and be capable of replicating automation functionality of any site.	9.1.6	9.1.6.2 All adaptive, perfective, and corrective STARS software maintenance including site adaptation, must [STARS-622] be maintained under FAA management via maintenance personnel located at the SCSC as well as at the OSFs.
3.2.2.8	2	STARS-SSD-01808	The STC shall[2] support testing, evaluation, validation, and configuration management of site-specific parameter adaptations, including parameter settings and software versions.	9.1.6	9.1.6.2 All adaptive, perfective, and corrective STARS software maintenance including site adaptation, must [STARS-622] be maintained under FAA management via maintenance personnel located at the SCSC as well as at the OSFs.
3.2.2.8	3	STARS-SSD-01809	The STC shall[3] support the capability to accept and release baseline software upgrades and their related documentation via electronic media.	9.1.6	9.1.6.2 All adaptive, perfective, and corrective STARS software maintenance including site adaptation, must [STARS-622] be maintained under FAA management via maintenance personnel located at the SCSC as well as at the OSFs.
3.2.2.8	4	STARS-SSD-01810	The STC shall[4] support the definition and distribution of baseline or incremental software upgrades, and their related documentation, as well as defining and listing content of a package.	9.1.6	9.1.6.2 All adaptive, perfective, and corrective STARS software maintenance including site adaptation, must [STARS-622] be maintained under FAA management via maintenance personnel located at the SCSC as well as at the OSFs.
3.2.2.8	5	STARS-SSD-01811	The STC shall[5] provide a means to archive, purge and restore a package as well as provide information on the package like user name, date/time and comments.	9.1.6	9.1.6.2 All adaptive, perfective, and corrective STARS software maintenance including site adaptation, must [STARS-622] be maintained under FAA management via maintenance personnel located at the SCSC as well as at the OSFs.

3.2.2.8	6	STARS-SSD-01812	The STC shall[6] support the testing of as well as store at least 3 sets of site adapted baseline or incremental software on electronic medium.	9.1.6	9.1.6.2 All adaptive, perfective, and corrective STARS software maintenance including site adaptation, must [STARS-622] be maintained under FAA management via maintenance personnel located at the SCSC as well as at the OSFs.
3.2.2.8	7	STARS-SSD-01813	The STC shall[7] support the verification, data collection, storage, and distribution of Program Trouble Reports (PTRs).	9.1.6	9.1.6.2 All adaptive, perfective, and corrective STARS software maintenance including site adaptation, must [STARS-622] be maintained under FAA management via maintenance personnel located at the SCSC as well as at the OSFs.
3.2.2.9	1	STARS-SSD-01814	The SCSC and OSF STARS development environment shall[1] support the integration of application software with CAS products and the editing, compiling, building, debugging, and testing of application software.	9.1.6	9.1.6.2 All adaptive, perfective, and corrective STARS software maintenance including site adaptation, must [STARS-622] be maintained under FAA management via maintenance personnel located at the SCSC as well as at the OSFs.
3.2.2.9	2	STARS-SSD-01815	Tools shall[2] execute on the SCSC and the OSF system to support the testing, evaluation, validation and release of application software and CAS.	9.1.6	9.1.6.2 All adaptive, perfective, and corrective STARS software maintenance including site adaptation, must [STARS-622] be maintained under FAA management via maintenance personnel located at the SCSC as well as at the OSFs.
3.2.2.9	3	STARS-SSD-01816	Each STARS automation system shall[3] support installation of the site adapted software, contained in a package at the SCSC.	9.1.6	9.1.6.2 All adaptive, perfective, and corrective STARS software maintenance including site adaptation, must [STARS-622] be maintained under FAA management via maintenance personnel located at the SCSC as well as at the OSFs.
3.2.2.9	4	STARS-SSD-01817	Tools shall[4] execute at the SCSC and OSF system to support to support the following: a. Configuration Management of the application software, CAS components and site adaptation b. Selecting an existing adaptation version in order to view the adaptation report for that version c. Selecting an existing adaptation version in order to compare it to another version d. Create a duplicate adaptation version from an existing one e. Deleting an adaptation database f. Storage and retention of simulation scenarios g. Configuration Management of PV scenarios by storing generated scenarios together with the software site adaptation.	9.1.6	9.1.6.2 All adaptive, perfective, and corrective STARS software maintenance including site adaptation, must [STARS-622] be maintained under FAA management via maintenance personnel located at the SCSC as well as at the OSFs.

3.2.2.9	5	STARS-SSD-01818	At least nine independent versions of adaptation management application software shall[5] be simultaneously available on both the SCSC and any OSF support system with a tool to ensure the version of software and adaptation are correct.	9.1.6	9.1.6.2 All adaptive, perfective, and corrective STARS software maintenance including site adaptation, must [STARS-622] be maintained under FAA management via maintenance personnel located at the SCSC as well as at the OSFs.
3.2.2.9	6	STARS-SSD-01819	The adaptation management application software on both the SCSC and the OSF systems shall[6] provide the following: a. Generation of all PV Scenarios from site adaptation parameters and specified PV test cases b. Storage and retrieval of specified PV test cases within a site adaptation database c. The capability to specify explicit scenario commands to be included with commands specified within the PV test cases.	9.1.6	9.1.6.2 All adaptive, perfective, and corrective STARS software maintenance including site adaptation, must [STARS-622] be maintained under FAA management via maintenance personnel located at the SCSC as well as at the OSFs.
3.2.2.9	7	STARS-SSD-01820	Utilities and tools shall[7] execute at the SCSC and the OSF Systems to back up system files.	9.1.6	9.1.6.2 All adaptive, perfective, and corrective STARS software maintenance including site adaptation, must [STARS-622] be maintained under FAA management via maintenance personnel located at the SCSC as well as at the OSFs.
3.2.2.10	1	STARS-SSD-01821	Utilities and tools shall[1] execute at the SCSC and the OSF Systems to perform the following: a. Detect and localize software run time errors and reproduce the environment in which they occurred b. Detect and isolate the source of software faults and failures c. Support the analysis and viewing of data d. Provide a STARS simulation capability per Section 3.2.1.3.2.	9.1.6	9.1.6.2 All adaptive, perfective, and corrective STARS software maintenance including site adaptation, must [STARS-622] be maintained under FAA management via maintenance personnel located at the SCSC as well as at the OSFs.
3.2.2.10	2	STARS-SSD-01822	Tools shall[2] execute at the SCSC and the OSF Systems to support the identification and resolution of PTRs and SCPs.	9.1.6	9.1.6.2 All adaptive, perfective, and corrective STARS software maintenance including site adaptation, must [STARS-622] be maintained under FAA management via maintenance personnel located at the SCSC as well as at the OSFs.

3.2.2.11	1	STARS-SSD-01823	Tools shall[1] execute at the SCSC and the OSF System to support the following activities: a. Creation of software site adaptations, including parameter settings and software versions b. Creation of new adaptation compatible with a specific version of the adaptation management application software c. Population of a new adaptation database with default values that are not system-wide and do not contain site-specific data d. Copying and pasting parameters within an adaptation database or between two databases.	9.1.6	9.1.6.2 All adaptive, perfective, and corrective STARS software maintenance including site adaptation, must [STARS-622] be maintained under FAA management via maintenance personnel located at the SCSC as well as at the OSFs.
3.2.2.11	2	STARS-SSD-01824	Utilities at the SCSC and the OSF Systems shall[2] support viewing and entry of adaptation parameters via a graphical user interface, with parameters grouped in accordance with the functional areas they affect.	9.1.6	9.1.6.2 All adaptive, perfective, and corrective STARS software maintenance including site adaptation, must [STARS-622] be maintained under FAA management via maintenance personnel located at the SCSC as well as at the OSFs.
3.2.2.11	3	STARS-SSD-01825	The screen containing Variable Site Parameters shall[3] include only those parameters that are capable of being modified online at the site and contain an initial value that is adaptable.	9.1.6	9.1.6.2 All adaptive, perfective, and corrective STARS software maintenance including site adaptation, must [STARS-622] be maintained under FAA management via maintenance personnel located at the SCSC as well as at the OSFs.
3.2.2.11	4	STARS-SSD-01826	Tools on the SCSC and the OSF Systems shall[4] support the following: a. Testing, evaluation and validation of software site adaptations, including parameter settings and software versions b. Searching for adaptation parameters by full or partial name, descriptive word or phrase and present a list of parameters that match the search with names and data entry screens for those parameters c. The presentation of lists of primary and secondary adaptation parameter database keys for selection.	9.1.6	9.1.6.2 All adaptive, perfective, and corrective STARS software maintenance including site adaptation, must [STARS-622] be maintained under FAA management via maintenance personnel located at the SCSC as well as at the OSFs.

3.2.2.11	5	STARS-SSD-01827	Utilities at the SCSC and the OSF Systems shall[5] support the following digital map capabilities: a. Interpreting maps in vector format as defined by the STARS Interchange Format Agreement (SIFA) b. Generation of a map report that includes counts of the map elements contained in each map and the totals for all maps c. Identification of a map element that exceeds capacity d. Entering and storing maps at resolutions down to .001 second of latitude and longitude.	9.1.6	9.1.6.2 All adaptive, perfective, and corrective STARS software maintenance including site adaptation, must [STARS-622] be maintained under FAA management via maintenance personnel located at the SCSC as well as at the OSFs.
3.2.2.11	6	STARS-SSD-01828	Utilities and tools at the SCSC and the OSF Systems shall[6] support the following with regard to adaptation reports: a. Generation of site adaptation reports, including tabular data and the date of changes for graphical data b. Generation of a report of the differences between two site adaptation reports c. A "Find" feature as well as the display of an adaptation report d. Generating a report of adaptation parameter history information for all parameters in an individual data entry screen and for an entire adaptation database.	9.1.6	9.1.6.2 All adaptive, perfective, and corrective STARS software maintenance including site adaptation, must [STARS-622] be maintained under FAA management via maintenance personnel located at the SCSC as well as at the OSFs.
3.2.2.11	7	STARS-SSD-01829	Utilities and tools at the SCSC and the OSF Systems shall[7] support retaining and viewing adaptation parameter history information for tabular and imported data, to include who and when change was made, change number, comments and parameter values before and after change.	9.1.6	9.1.6.2 All adaptive, perfective, and corrective STARS software maintenance including site adaptation, must [STARS-622] be maintained under FAA management via maintenance personnel located at the SCSC as well as at the OSFs.

3.2.2.11	8	STARS-SSD-01830	The adaptation management application software on the SCSC and the OSF Systems shall[8] support the following: a. Management of both system-wide and site-specific rules adaptation b. Replacing designated sections of system rules adaptation with site-specific rules adaptation c. Checking the merged system and site rules adaptation for syntactic and semantic correctness and reporting the results d. Comparing rules adaptation before and after merging system-wide and site-specific rules e. Identifying the origin of specific rules adaptation after merging system-wide and site-specific rules.	9.1.6	9.1.6.2 All adaptive, perfective, and corrective STARS software maintenance including site adaptation, must [STARS-622] be maintained under FAA management via maintenance personnel located at the SCSC as well as at the OSFs.
3.2.2.11	9	STARS-SSD-01831	Tools for the SCSC and the OSF Systems shall[9] support the following safety critical adaptation: a. Displaying geographic safety critical adaptation data graphically, using stereographic projection onto the system plane b. Displaying and printing combinations of geographic adaptation data in different colors c. Zooming and panning within the system plane while displaying a specified set of geographic site adaptation data d. Displaying plots of MSAW, CA and MCI alarms from textual reports of recorded data together with a specified set of geographic site adaptation data e. Displaying plots of geographic points and altitudes from an AVN Digital Obstacle File together with a specified set of geographic site adaptation data f. Displaying coordinates in latitude/longitude, terrain map bin, range/azimuth and X/Y range relative to operator selectable sensors and reference points g. Displaying and printing approach path monitor areas and AVN Digital Obstacle File data in a profile view that is perpendicular to the site system plane h. Displaying ranges of obstacles from the AVN Digital Obstacle File relative to approach path monitor boundaries, centerlines and origin points i. Labeling graphical objects with data values and identification from the site adaptation database j. Comparing two general terrain maps in the site adaptation database, highlighting the bins that are different, and identifying approach path monitor and MSAW/CA areas that overlap with new and modified bins k. Displaying plots of specific points from textual reports of recorded data together with a specified set of	9.1.6	9.1.6.2 All adaptive, perfective, and corrective STARS software maintenance including site adaptation, must [STARS-622] be maintained under FAA management via maintenance personnel located at the SCSC as well as at the OSFs.

			geographic site adaptation data l. Displaying a point, after defining its latitude and longitude, together with a specified set of geographic site adaptation data m. Displaying plots of geographic points from an AVN Airport Runway End data file together with a specified set of geographic site adaptation data.		

3.2.2.11	10	STARS-SSD-01832	Tools for the SCSC and the OSF Systems shall[10] support displaying graphically the geographic location, projected onto the system plane, of the following adaptation data: a. Maps b. Approach Monitor Volumes c. Filters d. MSAW/CA Areas e. Runway Pair Configurations f. Terminal Area Boundaries g. MSAW General Terrain Map, Radar, Magnetic Variation and Altimeter Tile sets h. Airports, Facilities, Hospitals and Significant Points i. Weather Area Boundary j. System Plane Origin and Point of Tangency k. Radars l. Radar PSR/SSR Max Range, PSR Range Filter, Sensor Coverage m. Test Target, Parrot, PE Locations and Tolerances n. Reflection Surfaces o. Uncorrelated Target Areas p. Target Data Filters q. Clutter and Blind Zones r. Range Rings, Display Center, Display Range s. SIM Runways, Approach Fixes t. FMA volumes	9.1.6	9.1.6.2 All adaptive, perfective, and corrective STARS software maintenance including site adaptation, must [STARS-622] be maintained under FAA management via maintenance personnel located at the SCSC as well as at the OSFs.
3.2.2.11	11	STARS-SSD-01833	Tools for the SCSC and the OSF Systems shall[11] support the entry of MSAW/CA Area, Filter, Display Map and Base Geographic Sector data in conjunction with the graphical display of geographic adaptation data, as selected by the user, and projected onto the system plane.	9.1.6	9.1.6.2 All adaptive, perfective, and corrective STARS software maintenance including site adaptation, must [STARS-622] be maintained under FAA management via maintenance personnel located at the SCSC as well as at the OSFs.

3.2.2.11	12	STARS-SSD-01834	Adaptation tools for the SCSC and the OSF Systems shall[12] support: a. Selecting a subset of adapted sensors b. Drawing and displaying one or more polygons associated with each adapted sensor's coverage, desired altimeter/airport regions, projected onto the system plane and overlaid on a background of adapted graphical objects, for example maps c. Automatically assigning up to eight sensors, associated with any polygons that overlap each surveillance/altimeter tile, to the adaptation for that tile d. Indicating that surveillance/altimeter tiles within polygons overlap more than eight sensors e. Indicating that surveillance/altimeter tiles within a polygon contain no sensors f. Assigning a system altimeter reporting station to TCPs via the logical TCP screen g. Assigning up to six regional altimeter reporting stations to TCPs via the logical TCP screen h. Assigning up to three adapted altimeter reporting stations and/or an airport to a region i. Automatically handling overlapping polygons by giving precedence to the polygon(s) with the highest sequence number(s) in the area of an overlap to produce the final output j. Indicating that one or more tiles within the tile set contain no assigned altimeter reporting station or airport.	9.1.6	9.1.6.2 All adaptive, perfective, and corrective STARS software maintenance including site adaptation, must [STARS-622] be maintained under FAA management via maintenance personnel located at the SCSC as well as at the OSFs.
3.2.2.12	1	STARS-SSD-01835	Tools at the SCSC shall[1] support the identification and resolution of HDR's.	9.1.6	9.1.6.2 All adaptive, perfective, and corrective STARS software maintenance including site adaptation, must [STARS-622] be maintained under FAA management via maintenance personnel located at the SCSC as well as at the OSFs.
3.2.2.12	2	STARS-SSD-01836	Diagnostics at the SCSC shall[2] detect and localize to the LRU, the source of hardware faults and failures.	9.1.6	9.1.6.2 All adaptive, perfective, and corrective STARS software maintenance including site adaptation, must [STARS-622] be maintained under FAA management via maintenance personnel located at the SCSC as well as at the OSFs.
3.2.2.12	3	STARS-SSD-01837	Tools at the SCSC shall[3] test, verify and support configuration management of COTS hardware.	9.1.6	9.1.6.2 All adaptive, perfective, and corrective STARS software maintenance including site adaptation, must [STARS-622] be maintained under FAA management via maintenance personnel located at the SCSC as well as at the OSFs.

3.2.2.13	1	STARS-SSD-01838	The SCSC and OSF systems shall[1] identify and authenticate operators by a log-on operation utilizing usernames of at least 6 characters.	9.1.6	9.1.6.2 All adaptive, perfective, and corrective STARS software maintenance including site adaptation, must [STARS-622] be maintained under FAA management via maintenance personnel located at the SCSC as well as at the OSFs.
3.2.2.13	2	STARS-SSD-01839	In accordance with FAA Order 1370.121 the system shall[2] automatically lockout an account after a configurable amount of failed log-on attempts over a configurable time period and periodically require operators to change authentication information.	3.1.14	3.1.14.1 System security must [STARS-201] be in accordance with the FAA and DoD standards identified in Appendix 3.
3.2.2.13	3	STARS-SSD-01840	All authentication information, either local or remote shall[3] be modifiable by operators.	3.1.14	3.1.14.1 System security must [STARS-201] be in accordance with the FAA and DoD standards identified in Appendix 3.
3.2.2.13	4	STARS-SSD-01841	All electronically stored passwords and PINs shall[4] be protected from disclosure during transmission by using FAA-approved hardware or software tools that are FIPS 140-2 compliant, in accordance with FAA Order 1370.121.	3.1.14	3.1.14.1 System security must [STARS-201] be in accordance with the FAA and DoD standards identified in Appendix 3.
3.2.2.13	6	STARS-SSD-01842	Access shall[6] be controlled between each security subject and each security object.	3.1.14	3.1.14.1 System security must [STARS-201] be in accordance with the FAA and DoD standards identified in Appendix 3.
3.2.2.13	7	STARS-SSD-01843	The system shall[7] restrict maintenance of operator passwords, allowed functionality and system control commands to an authorized operator.	3.1.14	3.1.14.1 System security must [STARS-201] be in accordance with the FAA and DoD standards identified in Appendix 3.
3.2.2.13	8	STARS-SSD-01844	The SCSC and OSF shall[8] be required to be in accordance with CIS Benchmarks where implementation does not impair usability of the system.	3.1.14	3.1.14.1 System security must [STARS-201] be in accordance with the FAA and DoD standards identified in Appendix 3.
3.2.2.13	9	STARS-SSD-01845	In accordance with FAA Order 1370.121 the system shall[9] display the official approved FAA System Use Notification Banner each time the user attempts to access an FAA system, and before allowing the user access to the system (including but not limited to all network devices (routers, switches, virtual private network (VPN), etc.), servers, workstations, laptops, tablets).	3.1.14	3.1.14.1 System security must [STARS-201] be in accordance with the FAA and DoD standards identified in Appendix 3.
3.2.2.13	10	STARS-SSD-01846	The system shall[10] prevent further changes to operator authentication information for a configurable period of time after the information is changed	3.1.14	3.1.14.1 System security must [STARS-201] be in accordance with the FAA and DoD standards identified in Appendix 3.
3.2.2.13	11	STARS-SSD-01847	The complexity of operator authentication information, including minimum length, shall[11] be configurable.	3.1.14	3.1.14.1 System security must [STARS-201] be in accordance with the FAA and DoD standards identified in Appendix 3.

3.2.2.13	12	STARS-SSD-01848	The system shall[12] display a screen saver image and require operator re-authentication after a configurable period of inactivity for a logged-in operator.	3.1.14	3.1.14.1 System security must [STARS-201] be in accordance with the FAA and DoD standards identified in Appendix 3.
3.2.2.14	1	STARS-SSD-01851	An audit trail shall[1] be created and maintained for all security audit events, with traceability to the individual operator and protect against unauthorized modification, access or destruction.	3.1.14	3.1.14.1 System security must [STARS-201] be in accordance with the FAA and DoD standards identified in Appendix 3.
3.2.2.14	2	STARS-SSD-01852	The following security relevant events shall[2] be audited: a. Successful or unsuccessful operator identification and authentication attempts b. Successful or unsuccessful external interface identification and authentication attempts c. Access attempts to security and mission critical objects d. External inter-process communications failures e. System administrator and security officer actions	3.1.14	3.1.14.1 System security must [STARS-201] be in accordance with the FAA and DoD standards identified in Appendix 3.
3.2.2.14	3	STARS-SSD-01853	When connected to the FAA Telecommunications Infrastructure (FTI) NAS Operational (OPIP) Network, STARS shall[3] integrate with the NAS Cyber Management System (NCMS) to support the NAS Cyber Operations (NCO) enterprise security event monitoring and detection capability, in accordance with FAA Order 1370.114 and FAA Notice 1370.46.	9.2.4	3.1.14.1 System security must [STARS-201] be in accordance with the FAA and DoD standards identified in Appendix 3. 4.1.5.2 STARS telecommunications requirements must [STARS-372] be in accordance with FAA-STD-039 NAS Open System and Protocols. 9.2.4.1 STARS must [STARS-661] continuously monitor, log, and record the health of STARS including telecommunications, components, external interfaces, and system services. 9.2.4.2 STARS must [STARS-662] report anomalous behavior and out-of-conformance conditions.
3.2.2.14	4	STARS-SSD-01854	The audit function shall[4] provide for the selection of security audit events to be audited for each operator.	9.2.4	9.2.4.1 STARS must [STARS-661] continuously monitor, log, and record the health of STARS including telecommunications, components, external interfaces, and system services. 9.2.4.2 STARS must [STARS-662] report anomalous behavior and out-of-conformance conditions.

3.2.2.14	5	STARS-SSD-01855	The information to be recorded with each security audit record shall[5] be: operator ID, operator class, date, time, event type, security object, success/failure status.	9.2.4	9.2.4.1 STARS must [STARS-661] continuously monitor, log, and record the health of STARS including telecommunications, components, external interfaces, and system services. 9.2.4.2 STARS must [STARS-662] report anomalous behavior and out-of-conformance conditions.
3.2.2.14	6	STARS-SSD-01856	The information to be recorded with each operator identification and authentication audit record shall[6] be: operator ID, date, time, event type, security object, success/failure status, and workstation.	9.2.4	9.2.4.1 STARS must [STARS-661] continuously monitor, log, and record the health of STARS including telecommunications, components, external interfaces, and system services.
3.2.2.14	7	STARS-SSD-01857	The audit logs shall[7] be viewable at the respective SCSC or OSF System in electronic media with the capability of being filtered by date, time, operator ID, operator class and workstation.	3.1.12 9.2.4	3.1.12.4 The system must [STARS-184] provide ATC operational information, including graphical plots, in electronic printable form. 9.2.4.1 STARS must [STARS-661] continuously monitor, log, and record the health of STARS including telecommunications, components, external interfaces, and system services.
3.2.2.14	8	STARS-SSD-01858	The system shall[8] provide a notification for the system administrator of an audit processing failure condition.	9.2.4	9.2.4.1 STARS must [STARS-661] continuously monitor, log, and record the health of STARS including telecommunications, components, external interfaces, and system services.
3.2.2.14	9	STARS-SSD-01859	The system shall[9] retain security audit event records in online storage from a configurable amount of previous days up to the current day.	9.2.4	9.2.4.1 STARS must [STARS-661] continuously monitor, log, and record the health of STARS including telecommunications, components, external interfaces, and system services.
3.2.2.14	10	STARS-SSD-01860	The system shall[10] provide the capability to copy selected security audit event records to removable, portable media.	3.1.11	3.1.11.4 All operational data, including hardware configuration, must [STARS-174] be recorded on a removable, nonvolatile elec¬tronic medium.
3.2.2.15	1	STARS-SSD-01861	Security administration of the SCSC and OSF Systems shall[1] include: a. The creation and deletion of operator account b. Selecting security audit events to be audited c. Generation of security audit reports d. Management of operator access controls and operator classes	3.1.14	3.1.14.1 System security must [STARS-201] be in accordance with the FAA and DoD standards identified in Appendix 3.
3.2.2.15	2	STARS-SSD-01862	Upon request, a configuration baseline on selected equipment for either the operating system or network equipment shall[2] be generated.	3.1.9	3.1.9.6 The system must [STARS-116] allow for the control of global system information.

3.2.2.15	3	STARS-SSD-01863	A mechanism shall[3] collect the operating system or network configuration baselines from the selected equipment into the Central Server and be capable of comparing this to a designated master collection to identify differences.	3.1.11	3.1.11.3 The system must [STARS-173] record all data necessary to recreate system status, performance, environment, and situation displays. 3.1.11.4 All operational data, including hardware configuration, must [STARS-174] be recorded on a removable, nonvolatile electronic medium.
3.2.2.15	4	STARS-SSD-01864	The system shall[4] automatically disable an operator, non-root account that has been inactive for a configurable time period.	3.1.14	3.1.14.1 System security must [STARS-201] be in accordance with the FAA and DoD standards identified in Appendix 3.
3.2.2.15	5	STARS-SSD-01865	The system shall[5] automatically delete an operator, non-root account that has been inactive for a configurable time period.	3.1.14	3.1.14.1 System security must [STARS-201] be in accordance with the FAA and DoD standards identified in Appendix 3.
3.2.2.16	1	STARS-SSD-01866	The SCSC and OSF Systems time shall[1] be set using GPS time as the source.	3.1.11	3.1.11.5 All recorded data must [STARS-175] be time stamped and synchronized to a calibrated national standard time source.
3.2.2.16	2	STARS-SSD-01867	The SCSC and OSF Systems shall[2] be sized for the implementation of 50 SCP resolutions per year at an average of 300 source lines of code (SLOC) per SCP resolution.	9.1.6	9.1.6.2 All adaptive, perfective, and corrective STARS software maintenance including site adaptation, must [STARS-622] be maintained under FAA management via maintenance personnel located at the SCSC as well as at the OSFs.
3.2.2.16	3	STARS-SSD-01868	The SCSC and OSF Systems shall[3] be sized for the implementation of 200 PTR resolutions per year at an average of 50 (SLOC) per PTR resolution.	9.1.6	9.1.6.2 All adaptive, perfective, and corrective STARS software maintenance including site adaptation, must [STARS-622] be maintained under FAA management via maintenance personnel located at the SCSC as well as at the OSFs.
3.2.2.16	4	STARS-SSD-01869	The SCSC and OSF Systems shall[4] be sized for the implementation and release of one baseline and 12 incremental site adapted software upgrade per year.	9.1.6	9.1.6.2 All adaptive, perfective, and corrective STARS software maintenance including site adaptation, must [STARS-622] be maintained under FAA management via maintenance personnel located at the SCSC as well as at the OSFs.
3.3.1	1	STARS-SSD-01870	With the exception of the independent time source, any data communications protocol used in vendor defined external system interfaces shall[1] comply with EIA, IEEE, ISO, ITU-T, or NIST standards.	4.2.1.1	4.1.5.2 STARS telecommunications requirements must [STARS-372] be in accordance with FAA-STD-039 NAS Open System and Protocols. 4.2.1.1 The STARS system must [STARS-381] support data exchange as indicated with the FAA systems identified below. Interface requirements are defined in separate specifications that are identified in Appendix 3, Reference Documents.

3.3.2.2	1	STARS-SSD-01871	The STARS surveillance interfaces shall[1] accept data from up to the number specified in Table 3.2.1.1.23-1 in any combination of terminal and En Route radars.	3.1.1 3.2.8	3.1.1.1 The system must [STARS-001] accept aircraft position and weather data simultaneously from multiple surveillance systems within geographic areas defined by site adaptable (SA) parameters. 3.2.8.1 The system must [STARS-281] have the capacity to connect to at least 16 surveillance sensors
3.3.2.2	2	STARS-SSD-01872	For STARS LITE only, the surveillance interfaces shall[2] accept data from up to one terminal and one En Route radar.	3.1.1	3.1.1.1 The system must [STARS-001] accept aircraft position and weather data simultaneously from multiple surveillance systems within geographic areas defined by site adaptable (SA) parameters.
3.3.2.2	3	STARS-SSD-01873	STARS ELITE TCW/TDWs in DSA mode shall[3] accept data from any terminal or En route sensors connected to the system, a single sensor at a time.	3.1.1	3.1.1.1 The system must [STARS-001] accept aircraft position and weather data simultaneously from multiple surveillance systems within geographic areas defined by site adaptable (SA) parameters.
3.3.2.2	4	STARS-SSD-01874	A remote location TCW/TDW adapted to support DSF shall[4] accept data from any combination of up to two terminal radars.	3.1.1	3.1.1.1 The system must [STARS-001] accept aircraft position and weather data simultaneously from multiple surveillance systems within geographic areas defined by site adaptable (SA) parameters.
3.3.2.2	5	STARS-SSD-01875	One primary and one independent backup interface shall[5] provide connectivity between each STARS subsystem and each digital surveillance system.	3.1.1	3.1.1.1 The system must [STARS-001] accept aircraft position and weather data simultaneously from multiple surveillance systems within geographic areas defined by site adaptable (SA) parameters.
3.3.2.2	6	STARS-SSD-01876	Each terminal surveillance system's interface configured for ASR-11 radar shall[6] comply with the modified CD-2 format in accordance with NAS-IC-34112105 Airport Surveillance Radar Model 11 (ASR-11) to Standard Terminal Automation Replacement System (STARS) and be adaptable to interpret the range fields in accordance with any one of the following encodings: a. FAA (MSB=32 nmi, LSB=1/64 nmi) b. DoD (MSB=64 nmi, LSB=1/32 nmi) c. Alternative DoD (MSB=128 nmi, LSB=1/16 nmi)	4.2.1	4.2.1.1 The STARS system must [STARS-381] support data exchange as indicated with the FAA systems identified below. Interface requirements are defined in separate specifications that are identified in Appendix 3, Reference Documents.
3.3.2.2	7	STARS-SSD-01877	Each terminal surveillance system's interface configured for either ASR-9, ASR-8/TDX-2000 or ASR-8/CTD digitized radar shall[7] be implemented in accordance with NAS-IC-34032105 Airport Surveillance Radar Model 9 (ASR-9) / Standard Terminal Automation Replacement System (STARS) ICD.	4.2.1	4.2.1.1 The STARS system must [STARS-381] support data exchange as indicated with the FAA systems identified below. Interface requirements are defined in separate specifications that are identified in Appendix 3, Reference Documents.

3.3.2.2	8	STARS-SSD-01878	Each terminal surveillance system's interface configured for ASR-8/TDX-2000 digitized radars shall[8] interpret the range fields for a maximum range of either 64 nmi or 128 nmi, as specified in adaptation.	3.1.1	3.1.1.2 The system must [STARS-002] process digital primary inputs from the FAA and DoD air traffic surveillance systems, if available.
3.3.2.2	9	STARS-SSD-01879	Each terminal surveillance system's interface configured for either a network connection to an ASR-11 radar or a WAM ASTERIX virtual radar shall[9] comply with the ASTERIX format in accordance with the ASR-11 Radar and the Data Translation Equipment ICD, G710561.	4.2.1	4.2.1.1 The STARS system must [STARS-381] support data exchange as indicated with the FAA systems identified below. Interface requirements are defined in separate specifications that are identified in Appendix 3, Reference Documents.
3.3.2.2	10	STARS-SSD-01880	Each En Route surveillance system's interface shall[10] be implemented in accordance with NAS-IC-34132105 En Route Surveillance Radar/STARS ICD.	4.2.1	4.2.1.1 The STARS system must [STARS-381] support data exchange as indicated with the FAA systems identified below. Interface requirements are defined in separate specifications that are identified in Appendix 3, Reference Documents.
3.3.2.2	11	STARS-SSD-01881	The STARS LITE FDIO interface shall[11] be implemented in accordance with NAS-MD-581 FDIO Software ICD via the Echo Port of the Remote Control Unit (RCU) for those messages defined below. All other messages will be accepted and discarded.	4.2.1	4.2.1.1 The STARS system must [STARS-381] support data exchange as indicated with the FAA systems identified below. Interface requirements are defined in separate specifications that are identified in Appendix 3, Reference Documents.
3.3.2.2	12	STARS-SSD-01882	Each terminal surveillance systems interface configured for Multilateration shall[12] be implemented in accordance with NAS-IC-34180001-01 Airport Surface Detection Equipment - Model X (ASDE-X) Multilateration Surveillance Data To Air Traffic Control (ATC) User Subsystem.	4.2.1	4.2.1.1 The STARS system must [STARS-381] support data exchange as indicated with the FAA systems identified below. Interface requirements are defined in separate specifications that are identified in Appendix 3, Reference Documents.
3.3.2.2	13	STARS-SSD-01883	Each terminal surveillance systems interface configured for ADS-B shall[13] be implemented in accordance with NAS-IC-82530001-01 Surveillance and Broadcast Services (SBS) Service Delivery Point (SDP) to ATC Automation and Service Monitoring User Subsystems.	4.2.1	4.2.1.1 The STARS system must [STARS-381] support data exchange as indicated with the FAA systems identified below. Interface requirements are defined in separate specifications that are identified in Appendix 3, Reference Documents.
3.3.2.2	14	STARS-SSD-01884	Each terminal surveillance systems interface configured for Wide Area Multilateration shall[14] be implemented in accordance with NAS-IC-82530001-01 Surveillance and Broadcast Services (SBS) Service Delivery Point (SDP) to ATC Automation and Service Monitoring User Subsystems.	4.2.1	4.2.1.1 The STARS system must [STARS-381] support data exchange as indicated with the FAA systems identified below. Interface requirements are defined in separate specifications that are identified in Appendix 3, Reference Documents.
3.3.2.3	1	STARS-SSD-01885	STARS shall[1] exchange data with NAS En Route systems via the number of ARTCC interfaces specified in Table 3.2.1.1.23-1.	3.1.7	3.1.7.1 The system must [STARS-081] receive and transmit NAS Flight Plan information between STARS and an Air Route Traffic Control Center (ARTCC).

3.3.2.3	2	STARS-SSD-01886	STARS shall[2] exchange handoff data with up to the number of adjacent TRACON/RAPCON and Host-Non-Host (HNH) facilities specified in Table 3.2.1.1.23-1 via an ARTCC interface.	3.1.7	3.1.7.1 The system must [STARS-081] receive and transmit NAS Flight Plan information between STARS and an Air Route Traffic Control Center (ARTCC).
3.3.2.3	4	STARS-SSD-01887	The IFDT interfaces shall[4] be defined in adaptation.	4.2.1	4.2.1.1 The STARS system must [STARS-381] support data exchange as indicated with the FAA systems identified below. Interface requirements are defined in separate specifications that are identified in Appendix 3, Reference Documents.
3.3.2.4	1	STARS-SSD-01888	When the STARS system is "not" adapted as an OCONUS site, the Interfacility interface shall[1] be implemented in accordance with NAS-IC-21058100 STARS to ARTCC for IFDT ICD.	4.2.1	4.2.1.1 The STARS system must [STARS-381] support data exchange as indicated with the FAA systems identified below. Interface requirements are defined in separate specifications that are identified in Appendix 3, Reference Documents.
3.3.2.4	2	STARS-SSD-01889	When the STARS system is adapted as an OCONUS site, the Interfacility interface shall[2] be implemented in accordance with the STARS to APEX for IFDT Outside the US ICD (H372347).	4.2.1	4.2.1.1 The STARS system must [STARS-381] support data exchange as indicated with the FAA systems identified below. Interface requirements are defined in separate specifications that are identified in Appendix 3, Reference Documents.
3.3.2.4	3	STARS-SSD-01890	An adaptable parameter shall[3] specify whether the interface uses the "Host" message format or the "ERAM" message format.	4.2.1	4.2.1.1 The STARS system must [STARS-381] support data exchange as indicated with the FAA systems identified below. Interface requirements are defined in separate specifications that are identified in Appendix 3, Reference Documents.
3.3.2.6	1	STARS-SSD-01891	The TFMS interface shall[1] be implemented in accordance with NAS-IC-21052414 STARS / TFMS ICD.	4.2.1	4.2.1.1 The STARS system must [STARS-381] support data exchange as indicated with the FAA systems identified below. Interface requirements are defined in separate specifications that are identified in Appendix 3, Reference Documents.
3.3.2.6	2	STARS-SSD-01892	The TFMS interface shall[2] be defined in adaptation and exchange data with only one Traffic Management Unit (TMU).	4.2.1	4.2.1.1 The STARS system must [STARS-381] support data exchange as indicated with the FAA systems identified below. Interface requirements are defined in separate specifications that are identified in Appendix 3, Reference Documents.
3.3.2.7	1	STARS-SSD-01893	The TDW interface shall[1] comply with any standard data communication protocol approved by EIA, IEEE, ISO, ITU-T, or NIST and be implemented in accordance with a vendor ICD.	4.2.1	4.2.1.1 The STARS system must [STARS-381] support data exchange as indicated with the FAA systems identified below. Interface requirements are defined in separate specifications that are identified in Appendix 3, Reference Documents.

3.3.2.8	1	STARS-SSD-01894	The FSL/EFSL subsystem shall[1] interface with up to the number of TCW/TDWs specified in Table 3.2.1.1.23-1 for local and remote towers.	3.2.8	3.2.8.8 The system must [STARS-288] have the capacity to connect to at least 160 (38 for ELITE) displays. 3.2.8.9 The system must [STARS-289] provide for up to 68 displays to all towers connected to a single TRACON.
3.3.2.8	2	STARS-SSD-01895	The ESL subsystem shall[2] interface with up to the number of TDWs specified in Table 3.2.1.2.10-1 for local and remote towers.	3.2.8	3.2.8.8 The system must [STARS-288] have the capacity to connect to at least 160 (38 for ELITE) displays. 3.2.8.9 The system must [STARS-289] provide for up to 68 displays to all towers connected to a single TRACON.
3.3.2.8	3	STARS-SSD-01896	The DSF interface to remote TCW/TDW displays shall[3] comply with either NAS-IC-34112105 for ASR-11 using CD-2 format or NAS-IC-34032105 for ASR-9.	4.2.1	4.2.1.1 The STARS system must [STARS-381] support data exchange as indicated with the FAA systems identified below. Interface requirements are defined in separate specifications that are identified in Appendix 3, Reference Documents.
3.3.2.8	4	STARS-SSD-01897	The DSF interface to remote TCW/TDW displays shall[4] be adaptable to interpret the range fields in accordance with any one of the following encodings: a. FAA (MSB=32 nmi, LSB=1/64 nmi) b. DoD (MSB=64 nmi, LSB=1/32 nmi) c. Alternative DoD (MSB=128 nmi, LSB=1/16 nmi)	3.1.1	3.1.1.2 The system must [STARS-002] process digital primary inputs from the FAA and DoD air traffic surveillance systems, if available. 3.1.1.3 The system must [STARS-003] process secondary inputs from the FAA and DoD air traffic surveillance systems.
3.3.2.10	1	STARS-SSD-01898	The one-way interface external physical path shall[1] be provided by the AIG.	4.2.1	4.2.1.1 The STARS system must [STARS-381] support data exchange as indicated with the FAA systems identified below. Interface requirements are defined in separate specifications that are identified in Appendix 3, Reference Documents.
3.3.2.10	2	STARS-SSD-01899	STARS training, performance verification, and test data shall[2] be excluded from the data transmitted across the AIG operational interfaces.	4.2.1	4.2.1.1 The STARS system must [STARS-381] support data exchange as indicated with the FAA systems identified below. Interface requirements are defined in separate specifications that are identified in Appendix 3, Reference Documents.

3.3.2.10	3	STARS-SSD-01900	The STARS AIG shall[3] provide the following external systems with an interface utilizing NAS-IC-21050001-01 STARS GeNUS ICD: a. Precision Runway Monitor b. Surface Movement Advisor c. Airport Movement Area Safety System d. National Offload Program e. CountOps System f. Airport Surface Detection Equipment - Model X g. Time Based Flow Management h. System Monitoring Report/Performance Data Report i. Airport Resource Management Tool j. Airport Surface Surveillance Capability k. Performance Data Analysis and Reporting System l. SWIM Terminal Data Distribution System	4.2.1	4.2.1.1 The STARS system must [STARS-381] support data exchange as indicated with the FAA systems identified below. Interface requirements are defined in separate specifications that are identified in Appendix 3, Reference Documents.
3.3.2.10	4	STARS-SSD-01901	Each AIG interface shall[4] be defined in adaptation and provide continuous connectivity to GFE communications devices.	4.2.1	4.2.1.1 The STARS system must [STARS-381] support data exchange as indicated with the FAA systems identified below. Interface requirements are defined in separate specifications that are identified in Appendix 3, Reference Documents.
3.3.2.10	5	STARS-SSD-01902	The security features for the AIG interfaces shall[5] be implemented in accordance with the requirements in the following sections: a. 3.2.1.1.18.2.3 External Systems b. 3.2.1.1.18.4 Security Audit c. 3.2.1.1.18.5 Security Administration	5.1.1	5.1.1.1 STARS security must [STARS-441] be implemented in accordance with FAA Order 1600.69, FAA Facility Security Management Program, at all sites where the STARS equipment is installed.
3.3.2.10	6	STARS-SSD-01903	The STARS system shall[6] receive data from external sources of barometric altimeter settings in accordance with NAS-IC-82150001-01 Digital Altimeter Setting Indicator (DASI) to Terminal Automation Systems.	4.2.1	4.2.1.1 The STARS system must [STARS-381] support data exchange as indicated with the FAA systems identified below. Interface requirements are defined in separate specifications that are identified in Appendix 3, Reference Documents.
3.3.2.10	7	STARS-SSD-01904	The STARS system shall[7] accommodate up to 16 DASI interfaces.	(Derived)	(Derived)
3.3.2.10	8	STARS-SSD-01905	The system shall[8] provide an interface to the FTI OPIP network.	4.2.1	4.2.1.1 The STARS system must [STARS-381] support data exchange as indicated with the FAA systems identified below. Interface requirements are defined in separate specifications that are identified in Appendix 3, Reference Documents.

3.3.2.10	9	STARS-SSD-01906	STARS operational data shall[9] be excluded from and only a single exercise will be used for the data transmitted across AIG simulation and training interfaces.	4.2.1	4.2.1.1 The STARS system must [STARS-381] support data exchange as indicated with the FAA systems identified below. Interface requirements are defined in separate specifications that are identified in Appendix 3, Reference Documents.
3.3.2.10	10	STARS-SSD-01907	The STARS interface to TBFM shall[10] also utilize the STARS To And From TBFM ICD, (NAS-IC-21058239)	4.2.1	4.2.1.1 The STARS system must [STARS-381] support data exchange as indicated with the FAA systems identified below. Interface requirements are defined in separate specifications that are identified in Appendix 3, Reference Documents.
3.4	1	STARS-SSD-01908	All internal interfaces shall[1] comply with any standard data communications protocol approved by EIA, IEEE, ISO, ITU-T, or NIST and be implemented in accordance with a vendor defined ICD.	4.2.1	4.2.1.1 The STARS system must [STARS-381] support data exchange as indicated with the FAA systems identified below. Interface requirements are defined in separate specifications that are identified in Appendix 3, Reference Documents.
3.5	1	STARS-SSD-01909	Software adaptation shall[1] be employed to set system-wide and site-specific operational parameters unless a parameter is inherently unique to a site.	9.1.6	9.1.6.2 All adaptive, perfective, and corrective STARS software maintenance including site adaptation, must [STARS-622] be maintained under FAA management via maintenance personnel located at the SCSC as well as at the OSFs.
3.5	2	STARS-SSD-01910	Access to change adaptation parameter data shall[2] be controlled.	5.1.1	5.1.1.1 STARS security must [STARS-441] be implemented in accordance with FAA Order 1600.69, FAA Facility Security Management Program, at all sites where the STARS equipment is installed.
3.5	3	STARS-SSD-01911	Unless a parameter is unique to a site all other adaptable parameters shall[3] be assigned a default value and an acceptable range of values.	(Derived)	(Derived)
3.5	4	STARS-SSD-01912	All adaptable parameter values shall[4] be validated against the acceptable range of values prior to acceptance and implementation with all errors reported to the operator.	3.1.9	3.1.9.8 The system must [STARS-118] perform error checking on all input messages.
3.5	5	STARS-SSD-01913	Site adaptation changes shall[5] be implemented, accepted and employed without the need for software recompilation or reload of the entire operational program.	(Derived)	(Derived)
3.5	6	STARS-SSD-01914	Parameter validation and data consistency checks performed during the data entry phase shall[6] be repeated during the adaptation generation phase.	3.1.9	3.1.9.8 The system must [STARS-118] perform error checking on all input messages.

3.5	7	STARS-SSD-01915	The Database Management Software (DMS) shall[7] support adapting Approach Monitor Zone (AMZ) volumes for Final Monitor Aid (FMA) processing.	3.1.4	3.1.4.3 The system must [STARS-053] detect unsafe proximity between a tracked aircraft and the protected airspace associated with the arrival runway when using FMA. 3.1.4.4 The system must [STARS-054] provide an audible alert for unsafe proximity between a tracked aircraft and the protected airspace associated with the arrival runway when using FMA.
3.5	8	STARS-SSD-01916	A maximum of 32 AMZ volumes each with 2 to 4 parallel runway approaches shall[8] be supported.	3.1.4	3.1.4.3 The system must [STARS-053] detect unsafe proximity between a tracked aircraft and the protected airspace associated with the arrival runway when using FMA. 3.1.4.4 The system must [STARS-054] provide an audible alert for unsafe proximity between a tracked aircraft and the protected airspace associated with the arrival runway when using FMA.
3.5	9	STARS-SSD-01917	Adaptation shall[9] specify whether each AMZ requires selection of a multilateration sensor and a required working CZ for each AMZ that requires selection of a multilateration sensor.	3.1.4	3.1.4.3 The system must [STARS-053] detect unsafe proximity between a tracked aircraft and the protected airspace associated with the arrival runway when using FMA. 3.1.4.4 The system must [STARS-054] provide an audible alert for unsafe proximity between a tracked aircraft and the protected airspace associated with the arrival runway when using FMA.
3.6.1	1	STARS-SSD-01918	The design of system equipment shall[1] contain safety features which comply with UL60950 or other appropriate UL standard where UL60950 is not applicable.	(Derived)	(Derived)
3.6.1	2	STARS-SSD-01919	The design of system equipment shall[2] comply with FAA-G-2100 paragraphs and area of consideration as specified below: a. 3.3.6.2 - Radio Frequency/Microware, X, and Laser Radiation Limits b. 3.3.7.1.1 - Noise in Operational Areas c. 3.3.7.1.2 - Noise in Equipment Areas	4.1.2	4.1.2.2 STARS must [STARS-342] comply with FAA-G-2100, Electronic Equipment, General Requirements.

3.6.2	1	STARS-SSD-01920	All system components, parts and material shall[1] conform to the following: a. Be free of toxic hazards as specified in MIL-STD-1472G, 5.7.9.4 b. Be free of Mercury and Cadmium in any measure c. Contain no Glass Fiber material which cause skin irritation on the outer surface.	(Derived)	(Derived)
3.6.2	2	STARS-SSD-01921	No materials installed in the equipment shall[2] emit the following: a. Gases which combine with the atmosphere to form an acid or corrosive alkali b. Toxic or corrosive fumes which would be detrimental to the performance of the equipment or health of personnel c. Gases which produce an explosive atmosphere.	4.4.1	4.4.1.1 STARS must [STARS-421] comply with relevant health and safety standards identified in Appendix 3, including:
3.6.3	1	STARS-SSD-01922	The system shall[1] comply with UL60950, Section 4 and associated subsections or other appropriate UL standard where UL60950 is not applicable.	(Derived)	(Derived)
3.6.3	2	STARS-SSD-01923	Enclosures installed in equipment areas shall[2] be either seismic zone 4 rated with mechanically latching doors or not seismic rated.	(Derived)	(Derived)
3.6.3	4	STARS-SSD-01924	Equipment installed in equipment areas within seismic zone 4 rated enclosures shall[4] be mounted in accordance with guidelines in Federal Emergency Management Agency (FEMA) document FEMA 74/September 1994, “Reducing the Risks of Nonstructural Earthquake Damage”.	(Derived)	(Derived)
3.6.3	5	STARS-SSD-01925	TDW articulated arms shall[5] be seismic zone 4 rated per Telcordia GR-63-CORE (Industry-wide Seismic Standard).	(Derived)	(Derived)
3.6.4	1	STARS-SSD-01926	Electrical systems shall[1] comply with UL60950, Section 2 or other appropriate UL standard where UL60950 is not applicable.	(Derived)	(Derived)
3.6.5	1	STARS-SSD-01927	All cabling and connections shall[1] be installed in such a manner so as not to impede daily operations.	4.1.2	4.1.2.6 Cabling must [STARS-346] be in accordance with NFPA 70, National Electrical Code; FAA-C-1217, Electrical Work, Interior; and FAA-G-2100, Electronics Equipment General Requirements.
3.6.6	1	STARS-SSD-01928	Cable installation shall[1] be in accordance with National Electrical Code, NFPA 70.	4.1.2	4.1.2.6 Cabling must [STARS-346] be in accordance with NFPA 70, National Electrical Code; FAA-C-1217, Electrical Work, Interior; and FAA-G-2100, Electronics Equipment General Requirements.

3.6.7	1	STARS-SSD-01929	The system shall[1] be fire resistant in accordance with UL60950, Section 4.7 or other appropriate UL standard where UL60950 is not applicable.	(Derived)	(Derived)
3.8	1	STARS-SSD-01930	Air filters shall[1] comply with FAA-G-2100F, 3.1.3.5.1.	4.1.2	4.1.2.2 STARS must [STARS-342] comply with FAA-G-2100, Electronic Equipment, General Requirements.
3.8	2	STARS-SSD-01931	System resources located in the TRACON operations and equipment areas shall[2] operate under the ambient conditions listed in FAA-G-2100F, Table III, Environment V, with the following exceptions: a. Temperature range of 10 degrees to 30 degrees Celsius for all resources. b. Altitude range of 0 meters to 2000 meters above sea level.	4.1.2	4.1.2.2 STARS must [STARS-342] comply with FAA-G-2100, Electronic Equipment, General Requirements.
3.8	3	STARS-SSD-01932	System resources located in the tower cab operations and equipment areas shall[3] operate under the ambient conditions listed in FAA-G-2100F, Table III, Environment I, with the following exceptions: a. Temperature range of 10 degrees to 30 degrees Celsius for all resources except the Tower Display Monitor. b. Temperature range of 10 degrees to 40 degrees Celsius for the Tower Display Monitor. c. Altitude range of 0 meters to 2000 meters above sea level.	4.1.2	4.1.2.2 STARS must [STARS-342] comply with FAA-G-2100, Electronic Equipment, General Requirements.
3.8	4	STARS-SSD-01933	No system failures or service interruptions shall[4] occur due to electrostatic discharge under the following conditions: a. While in a non-operating state, when subjected to either a voltage discharge of 12 kV, as stored in a 100 pF capacitor and discharged to the equipment case through a series impedance of 100 ohms, or a transient current with an energy content of 7.2 millijoules. b. During operation, when subjected to either a voltage discharge of 7 kV, as stored in a 100 pF capacitor and discharged to the equipment case through a series impedance of 500 ohms, or a transient current with an energy content of 2.45 millijoules.	4.1.2	4.1.2.2 STARS must [STARS-342] comply with FAA-G-2100, Electronic Equipment, General Requirements.
3.8	5	STARS-SSD-01934	The thermal design of the system shall[5] be in accordance with FAA-G-2100F, 3.1.3.5.2, 3.1.3.5.3.	4.1.2	4.1.2.2 STARS must [STARS-342] comply with FAA-G-2100, Electronic Equipment, General Requirements.

3.8	6	STARS-SSD-01935	The environmental values for non-operational system equipment shall[6] be in accordance with FAA-G-2100F, 3.2.1.2.4 with the following exceptions: a. Maximum non-operational temperature of 56 degrees Celsius. b. Minimum non-operational temperature of -30 degrees Celsius.	4.1.2	4.1.2.2 STARS must [STARS-342] comply with FAA-G-2100, Electronic Equipment, General Requirements.
3.9	1	STARS-SSD-01936	The average measured central processing unit idle time of each processing component shall[1] be greater than or equal to fifty percent (50%) when obtained by averaging measurements taken as follows: a. At 10 second intervals over a one hour period, while operating at the STARS workload and response times defined in Sections 3.2.1.1.23 FS Performance b. At 10 second intervals over a one hour period, while operating at the STARS workload and response times defined in Sections 3.2.1.2.10 ES Performance c. At 5 minute intervals over a one hour period, while operating at the STARS workload defined in Table 3.2.1.1.23-3A STARS LITE System Workload, System Data Capacity.	3.2.3 3.2.4	3.2.3.5 The system processors must [STARS-235] have a minimum 50-percent reserve capacity when initially fielded. 3.2.4.1 The system must [STARS-241] be scalable so as to provide the same capacity, functionality, and capability for a range of terminal ATC facilities.
3.9	2	STARS-SSD-01937	The average utilization of physical random access memory (RAM) for each processing component shall[2] be less than or equal to the following: a. Seventy-five percent while operating at the STARS workload and in compliance with response times defined in Sections 3.2.1.1.23 FS Performance b. Seventy-five percent while operating at the STARS workload and in compliance with response times defined in Sections 3.2.1.2.10 ES Performance c. Fifty percent while operating at the STARS workload defined in Table 3.2.1.1.23-3A STARS LITE System Workload, System Data Capacity.	3.2.3 3.2.4	3.2.3.6 The system memory must [STARS-236] have a minimum 50-percent reserve capacity when initially fielded. 3.2.4.1 The system must [STARS-241] be scalable so as to provide the same capacity, functionality, and capability for a range of terminal ATC facilities.
3.9	3	STARS-SSD-01938	The physical RAM for each processing component shall[3] be expandable by at least one hundred percent (100%) of the delivered level by adding plug-in modules.	3.2.3 3.2.4	3.2.3.6 The system memory must [STARS-236] have a minimum 50-percent reserve capacity when initially fielded. 3.2.4.1 The system must [STARS-241] be scalable so as to provide the same capacity, functionality, and capability for a range of terminal ATC facilities.

3.9	4	STARS-SSD-01939	On-line storage capacity used for all functionality except data recording shall[4] be less than or equal to fifty percent of maximum capacity, while operating under the workload and response times conditions defined in Sections 3.2.1.1.23 FS Performance and 3.2.1.2.10 ES Performance.	3.2.3 3.2.4	3.2.3.5 The system processors must [STARS-235] have a minimum 50-percent reserve capacity when initially fielded. 3.2.4.1 The system must [STARS-241] be scalable so as to provide the same capacity, functionality, and capability for a range of terminal ATC facilities.
3.9	5	STARS-SSD-01940	The average measured utilization as a percentage of total capacity of local area network(s)(LAN) shall[5] be less than or equal to fifty percent when obtained by averaging measurements taken at 60 second intervals over a one hour period based on the following: a. While operating at the STARS workload and response times defined in Sections 3.2.1.1.23 FS Performance b. While operating at the STARS workload and response times defined in Sections 3.2.1.2.10 ES Performance.	3.2.3 3.2.4	3.2.3.7 The system LAN must [STARS-237] have a minimum 50-percent reserve capacity when initially fielded. 3.2.4.1 The system must [STARS-241] be scalable so as to provide the same capacity, functionality, and capability for a range of terminal ATC facilities.
3.10	1	STARS-SSD-01941	Preventive maintenance on the STARS subsystems shall[1] not be required more often than one time every three months nor take more than 2 staff hours by a single individual.	9.1.2	9.1.2.1 Field Level Maintenance must [STARS-581] be conducted in accordance with FAA Order 6000.15, General Maintenance Handbook for Airway Facilities, and JO 6191.5 and 6191.6 Maintenance Handbooks.
3.10	2	STARS-SSD-01942	The mean time to repair (MTTR) for all components in the STARS system shall[2] be no greater than 0.5 hours with a maximum repair to not exceed 1.5 hours.	3.3.1	3.3.1.1 The system Mean Time to Repair (MTTR) must be [STARS-311] 0.5 hours.
3.10	3	STARS-SSD-01943	The STARS design shall[3] preclude any single point failures, excluding TCWs, TDWs or MCWs.	3.3.2	3.3.2.1 The system design must [STARS-321] preclude single point failures, excluding TCWs, MCWs, and TDWs.

3.10	4	STARS-SSD-01944	The following components shall[4] meet or exceed the specified failure rates: a. TCW/TDW/MCW - MTBF in hours of 500 for failures less than or equal to 6 minutes for the first Operational Site delivery b. TCW/TDW/MCW - MTBF in hours of 2,000 for failures less than or equal to 6 minutes for the twentieth Operational Site delivery c. TCW/TDW/MCW – MTBCF in hours of 7,500 for failures greater than 6 minutes d. All other components – MTBCF in hours of 5,000 for failures greater than 6 minutes e. TDW – MTBF of equal to or greater than 2,500 hours, for STARS LITE only.	3.2.2 3.3.1	3.2.2.1 The system must [STARS-221] recover from a power reset to Full Service in no more than 6 minutes. 3.2.2.2 The system must [STARS-222] recover from a full system reset to Full Service in no more than 6 minutes. 3.3.1.2 The system Mean Time Between Critical Failures (MTBCF) (Full Service) must be [STARS-312] 100,000 hours (for ATC Operational and Monitor & Control (M&C) Functionality failures greater than 5 seconds). 3.3.1.3 The system Mean Time Between Critical Failures (MTBCF) (Emergency Service) must be [STARS-313] 100,000 hours (for ATC Operational and M&C Functionality failures greater than 5 seconds), if applicable.
3.10	5	STARS-SSD-01945	The system configuration that provides ATC Operational and Monitor & Control Functionality or support shall[5] have an inherent hardware availability as follows: a. STARS FSL - greater than or equal to .999995 b. STARS ESL - greater than or equal to .999995 c. STARS LITE - greater than or equal to .9998 d. STARS FSL & ESL System Support Functionality – greater than or equal to .999 e. SCSC or OSF System – greater than or equal to .999.	3.3.2	3.3.2.2 Full Service availability must [STARS-322] be no less than .999995. 3.3.2.3 Emergency Full Service availability must [STARS-323] be no less than .999995.

3.10	6	STARS-SSD-01946	The system configuration that provides ATC Operational and Monitor & Control Functionality or support shall[6] have an inherent hardware reliability as follows: a. STARS FSL or ESL – MTBF in hours of 30 for failures less than or equal to 5 seconds for the first Operational Site delivery b. STARS FSL or ESL – MTBCF in hours of 10,000 for failures greater than 5 seconds for the first Operational Site delivery c. STARS FSL or ESL – MTBF in hours of 300 for failures less than or equal to 5 seconds for the twentieth Operational Site delivery d. STARS FSL or ESL – MTBCF in hours of 100,000 for failures greater than 5 seconds for the twentieth Operational Site delivery	3.3.1	3.3.1.2 The system Mean Time Between Critical Failures (MTBCF) (Full Service) must be [STARS-312] 100,000 hours (for ATC Operational and Monitor & Control (M&C) Functionality failures greater than 5 seconds). 3.3.1.3 The system Mean Time Between Critical Failures (MTBCF) (Emergency Service) must be [STARS-313] 100,000 hours (for ATC Operational and M&C Functionality failures greater than 5 seconds), if applicable.
3.10	7	STARS-SSD-01947	The availability of the STARS equipment that supports external interfaces shall[7] be as follows: a. For PRM - not less than 0.999 b. For SMA – not less than 0.99 c. For AMASS – not less than 0.999.	3.3.2	3.3.2.2 Full Service availability must [STARS-322] be no less than .999995. 3.3.2.3 Emergency Full Service availability must [STARS-323] be no less than .999995.
3.11.1	1	STARS-SSD-01948	The system shall[1] provide the capability to add, delete, and adapt hardware and software components to provide new and/or improved functionality, capacity and/or performance without change to the architecture.	3.2.3	3.2.3.1 The system must [STARS-231] permit improvements to hardware elements without requiring a change to the system architecture. 3.2.3.2 The system must [STARS-232] permit improvements to software elements without requiring a change to the system architecture.
3.11.1	2	STARS-SSD-01949	The system architecture shall[2] provide the capacity to add, delete, or adapt resources in order to implement a tailored terminal automation system with the capacity, functionality and performance required to provide air traffic control service under a specified air traffic load.	3.2.3	3.2.3.1 The system must [STARS-231] permit improvements to hardware elements without requiring a change to the system architecture. 3.2.3.2 The system must [STARS-232] permit improvements to software elements without requiring a change to the system architecture.
3.11.2.1	1	STARS-SSD-01950	External cable connections, excluding data entry sets and maintenance connections, shall[1] be on or accessible from the rear panel from any workstation.	(Derived)	(Derived)

3.11.2.1	2	STARS-SSD-01951	Connections for data entry sets on TCWs or TDWs and maintenance equipment for any workstation shall[2] be from the front.	(Derived)	(Derived)
3.11.2.1	3	STARS-SSD-01952	TCWs, TDWs and MCWs shall[3] be capable of generating aural signals as specified in Section 3.12.1.3.4.6, Auditory Coding.	3.1.10	3.1.10.26 The system must [STARS-156] generate aural alarms based upon the adaptation of each individual TCP. 3.1.10.27 The system must [STARS-157] enable and disable aural alarms at each TCP via manual entry.
3.11.2.1	4	STARS-SSD-01953	Replacement of any workstation data entry device shall[4] be accomplished without requiring a restart or reload of any non-workstation hardware or software component.	3.2.3	3.2.3.1 The system must [STARS-231] permit improvements to hardware elements without requiring a change to the system architecture.
3.11.2.1	5	STARS-SSD-01954	The graphics controller/generator shall[5] provide primitives to support the computer human interface requirements of Section 3.12.1, Computer Human Interface.	3.1.10	3.1.10.2 The system must [STARS-132], based upon adaptation, display general information for the facility at each TCP.
3.11.2.1	6	STARS-SSD-01955	All workstations shall[6] be capable of displaying a minimum of 256 colors.	(Derived)	(Derived)
3.11.2.2	1	STARS-SSD-01956	The key configuration and number keys shall[1] be of either the QWERTY (Figure 3.11.2.2-3) or ABC (Figures 3.11.2.2-1 and -2) layout with all keyboards connected to the same device being of the same layout.	(Derived)	(Derived)
3.11.2.2	2	STARS-SSD-01957	The Alpha-Numeric keyboards shall[2] conform to either MIL-HDBK-1280 Figure 2 or ANSI/HFES 100.	(Derived)	(Derived)
3.11.2.2	3	STARS-SSD-01958	The dimensions, resistance, displacement and separation of keys shall[3] be in accordance with Table VII of MIL-STD-1472G.	(Derived)	(Derived)
3.11.2.2	4	STARS-SSD-01959	The slope of keyboards not mounted in a shelf shall[4] be 0 to 25 degrees above horizontal, with the preferred slope 0 to 15 degrees.	(Derived)	(Derived)
3.11.2.2	5	STARS-SSD-01960	Shelf mounted keyboards shall[5] have a slope of 0 degrees.	(Derived)	(Derived)
3.11.2.2	6	STARS-SSD-01961	The alphanumeric entry device for TCWs/TDWs and GPWs shall[6] be available in either non-illuminated or self-illuminated and non-illuminated configurations respectively.	(Derived)	(Derived)
3.11.2.2	7	STARS-SSD-01962	The non-illuminated alphanumeric entry device shall[7] be readable under ambient light conditions of 5 foot-candles or greater so that each key is clearly visible.	(Derived)	(Derived)

3.11.2.2	8	STARS-SSD-01963	Alphanumeric entry device illumination shall[8] be such that each key is clearly visible in a dark room with the intensity variably controlled from off to full intensity.	(Derived)	(Derived)
3.11.2.2	9	STARS-SSD-01964	The keycap engraving and colors of the ABC keyboard shall[9] be in accordance with Figure 3.11.2.2-1 and -2 respectively.	(Derived)	(Derived)
3.11.2.2	10	STARS-SSD-01965	The ABC keyboard keycaps characters shall[10] be at least 0.12 inches high and those containing two lines have at least a 0.03 inch separation.	(Derived)	(Derived)
3.11.2.3	1	STARS-SSD-01966	A mouse shall[1] be capable of being used on any hard flat surface to generate x and y coordinate values which control the position of the cursor on the associated display.	3.1.9	3.1.9.5 The system must [STARS-115] provide a controller with the ability to manipulate the presentation of information on an individual situation display.
3.11.2.3	2	STARS-SSD-01967	A trackball shall[2] be used to generate x and y coordinate values which control the position of the cursor on the associated display.	3.1.9	3.1.9.5 The system must [STARS-115] provide a controller with the ability to manipulate the presentation of information on an individual situation display.
3.11.2.3	3	STARS-SSD-01968	The mouse/trackball maneuverability shall[3] be such that the user can consistently orient the cursor movement within 10 degrees of the desired direction without visual reference.	(Derived)	(Derived)
3.11.2.3	4	STARS-SSD-01969	The mouse/trackball movement shall[4] be such that the user can consistently move the mouse/trackball and the associated cursor movement generated will be to the desired location within 15% of the selected display range.	(Derived)	(Derived)
3.11.2.3	5	STARS-SSD-01970	The mouse/trackball shall[5] have one or more buttons that provide momentary closure and release inputs to the system.	(Derived)	(Derived)
3.11.2.3	6	STARS-SSD-01971	The mouse shall[6] be shaped to allow the user to grasp it using either hand.	(Derived)	(Derived)
3.11.2.4	1	STARS-SSD-01972	Special tools shall[1] be in accordance with FAA-G-2100F, 3.3.1.3.5.5 and its associated subsections.	(Derived)	(Derived)
3.11.2.5	1	STARS-SSD-01973	Two versions of the three button trackball shall[1] be provided, one that fits into the TCW shelf assembly and the other a free-standing unit both containing trackball buttons of a different color than the surrounding surface.	(Derived)	(Derived)

3.11.2.5	2	STARS-SSD-01974	The left and middle mouse button shall[2] be interpreted as the ENTER and Slew/ENTER keys respectively.	(Derived)	(Derived)
3.11.2.5	3	STARS-SSD-01975	A data entry set shall[3] contain, at a minimum, a keyboard with "QWERTY" layout per Figure 3.11.2.2-3 or ABC layout per Figure 3.11.2.2-1 and Figure 3.11.2.2-2, and a pointer device.	(Derived)	(Derived)
3.11.2.5	4	STARS-SSD-01976	The TCW shall[4] allow for the interface of up to three data entry sets.	(Derived)	(Derived)
3.11.2.5	5	STARS-SSD-01977	A data entry device failure shall[5] have no effect on the operation of any other device in the associated data entry set nor on other data entry sets.	3.3.2	3.3.2.1 The system design must [STARS-321] preclude single point failures, excluding TCWs, MCWs, and TDWs.
3.11.2.5	6	STARS-SSD-01978	The TCW display shall[6] have one of the following display resolutions: a. Minimum of 1280 dots horizontal by 1024 lines vertical with a minimum viewable area of 19 inches diagonally (STARS ELITE only) b. Minimum of 2048 dots horizontal by 2048 lines vertical with a minimum viewable area of 19.6 inches square.	3.2.8	3.2.8.2 The system must [STARS-282] have the capacity to provide a surveillance coverage area of 2048 square nautical miles.
3.11.2.5	7	STARS-SSD-01979	The TCW shall[7] be a self-contained unit with the maximum outline dimensions which allows installation in the TRACON/RAPCON Modular Console specified in FAA-E-2312a, 6.1, having an overall height of less than 48.63 inches with the center line of the monitor to be at 35.35 ± .12 inches. (Exclude for Dismounted TCW)	(Derived)	(Derived)
3.11.2.5	8	STARS-SSD-01980	The TCW display mounting angle shall[8] be fixed between 15 and 24 degrees measured with respect to a vertical plane. (Exclude for Dismounted TCW)	(Derived)	(Derived)

3.11.2.5	9	STARS-SSD-01981	The TCW shall[9] be designed as follows (Exclude for Dismounted TCW): a. Mounted on casters or other means to facilitate movement by no more than two people b. Capable of a swivel movement with a turn radius of less than 60 inches c. Capability to lock the device in place without facility modification d. Exhaust air to the rear away from the operator e. Contain a shelf that is removable with a height adjustment to ensure flush installation with the top of the separator post shelf specified in FAA-E-2312a, SPS-1 and SPS-2 f. Provide a writing surface that is covered with a replaceable, non-glare, non-slip material sufficient to accommodate one data entry set and sufficient space for one 8.5" x 11" and one 6” x 9” pad of paper without overhanging the shelf.	(Derived)	(Derived)
3.11.2.5	10	STARS-SSD-01982	TCW installation shall[10] allow the operation of TCWs up to 500 physical feet from the TRACON equipment room.	(Derived)	(Derived)
3.11.2.6	1	STARS-SSD-01983	DCPs are optional, but when installed shall[1] be in either the TCW or TDW DCP configuration.	(Derived)	(Derived)
3.11.2.6	2	STARS-SSD-01984	The TDW DCPs are optional, but when installed shall[2] permit free standing shelf mounting with tilt capability, console mounting with tilt capability, or fixed flush console mounting with either horizontal or vertical labeling configurations, in a single panel configuration no larger than 4 by 16 inches, as shown in Figure 3.11.2.6-3.	(Derived)	(Derived)
3.11.2.6	3	STARS-SSD-01985	DCP switches shall[3] be designed as follows: a. With variable illumination b. An on/off state indicated by intensity change c. White caps d. Illuminated in a white/yellow color.	(Derived)	(Derived)
3.11.2.6	4	STARS-SSD-01986	Backlighted labels on the DCP shall[4] be in accordance with Figure 3.11.2.6-2 for TCWs and Figure 3.11.2.6-3 for TDWs.	(Derived)	(Derived)

3.11.2.6	5	STARS-SSD-01987	The DCP shall[5] be designed as follows: a. The label backlighting will use a green-yellow color b. The knobs will be made a matte finish with a gray outer and black inner color c. All mounting hardware will be matte black d. The knobs will have 32 ± 3 detents per revolution and permit continuous rotation e. There will be at least 1.25 inch clearance between outer DCP knobs f. A single function knob will be concentric and have the inner and outer knobs locked together g. A dual function knob will be concentric with a .5 inch nominal inner and .7 inch nominal outer diameter	(Derived)	(Derived)
3.11.2.6	6	STARS-SSD-01988	Each DCP shall[6] be removable as a subassembly.	3.2.4	3.2.4.1 The system must [STARS-241] be scalable so as to provide the same capacity, functionality, and capability for a range of terminal ATC facilities. 9.1.2.4 A credentialed ATSS must [STARS-584] perform system certification, preventative and corrective maintenance, equipment and software modifications, security, remote maintenance monitoring and control, maintenance logging, and technical documentation tasks.
3.11.2.6	7	STARS-SSD-01989	The TCW DCPs shall[7] include knobs and switches arranged into two panels, one on each side of the display, in accordance with Figures 3.11.2.5-1 and 3.11.2.6-1.	(Derived)	(Derived)

3.11.2.6	8	STARS-SSD-01990	The left TCW DCP (See Figure 3.11.2.5-1 and 3.11.2.6-1) shall[8] contain the following with functions in parentheses where included: a. Mode Select Switches: • One (1) FS • One (1) ES b. Concentric Knob: • Outer Knob - Panel Illumination (Label backlighting brightness control) • Inner Knob - Select Illumination (Switch brightness control) c. Concentric Knob: • Outer Knob - History Brightness • Inner Knob - History Length d. Concentric Knob: • Outer Knob - Full Data Block Brightness • Inner Knob - Tabular List Brightness e. Concentric Knob: • Outer Knob - Limited Data Block Brightness • Inner Knob - Weather Brightness f. Concentric Knob: • Outer Knob - Position Symbol Brightness • Inner Knob - Primary Brightness g. Concentric Knob: • Outer Knob - Other - Unowned FDB Brightness • Inner Knob - Range Ring Brightness h. Concentric Knob: • Outer Knob -Map A • Inner Knob -Map B	3.1.9	3.1.9.2 The system must [STARS-112] change the range scale on a display via a range knob.

3.11.2.6	9	STARS-SSD-01991	The right TCW DCP (See Figure 3.11.2.5-1 and 3.11.2.6-1) shall[9] contain the following with functions in parentheses where included: a. Radar Data Select Switches: • One (1) MAP UNCOR • One (1) UNCOR b. Six (6) Map Select Switches c. Concentric Knob: • Outer Knob - Spare 1 • Inner Knob - Spare 2 d. Concentric Knob: • Outer Knob - Leader Length • Inner Knob - Leader Direction e. Concentric Knob: • Outer Knob - South/North De-Centering • Inner Knob - East/West De-Centering f. Concentric Knob: • Outer Knob - Character Size (all data blocks) • Inner Knob - Character Size(position symbols) g. Concentric Knob: • Outer Knob – Range • Inner Knob - Range Ring Interval	3.1.9	3.1.9.2 The system must [STARS-112] change the range scale on a display via a range knob.

3.11.2.6	10	STARS-SSD-01992	The tower Display Control Panel shall[10] contain the following controls (labels are as shown in Figure 3.11.2.6-3): a. Switches (located on left side of horizontal panel or top of vertical panel): 1. Mode Select Switches • One (1) FS • One (1) ES 2. Radar Data Select Switches • One (1) MAP UNCOR • One (1) UNCOR 3. Six (6) Map Select Switches b. Controls 1. Display Backlight Control (potentiometer or slider) - DISPLAY BRIGHTNESS c. Concentric Encoders (located in bottom row of horizontal panel or left column of vertical panel): 1. Concentric Encoder • Outer Knob – History Brightness • Inner Knob – History Length 2. Concentric Encoder • Outer Knob – Full Data Block Brightness • Inner Knob – Tabular List Brightness 3. Concentric Encoder • Outer Knob – Limited Data Block Brightness • Inner Knob – Weather Brightness 4. Concentric Encoder • Outer Knob – Position Symbol Brightness • Inner Knob – Primary Brightness 5. Concentric Encoder • Outer Knob – Other – Unowned FDB Brightness • Inner Knob – Range Ring Brightness 6. Concentric Encoder • MAP A • MAP B d. Concentric Encoders (located in top row of horizontal panel or right column of vertical panel): 1. Concentric Encoder • Outer Knob – Panel Illumination (Label backlighting brightness control) • Inner Knob – Switch Illumination (Switch brightness control) 2. Concentric Encoder • Outer Knob – Spare 1 • Inner Knob – Spare 2 3. Concentric Encoder • Outer Knob – Leader Length • Inner Knob – Leader Direction 4. Concentric Encoder • Outer Knob – South/North De-Centering • Inner Knob – East/West De-Centering 5. Concentric Encoder • Outer Knob – Character Size (all data blocks) • Inner Knob – Character Size (position symbols) 6. Concentric Encoder • Outer Knob – Range • Inner Knob – Range Ring Interval	3.1.9	3.1.9.2 The system must [STARS-112] change the range scale on a display via a range knob.

3.11.2.7	1	STARS-SSD-01993	Interfaces for the digital control knobs (pulse generators) and switches shall[1] use a standard serial interface.	(Derived)	(Derived)
3.11.2.7	2	STARS-SSD-01994	A message shall[2] be sent whenever there is a change in a knob setting or a switch is depressed.	3.1.11	3.1.11.1 The system must [STARS-171] continuously record all input and output messages from internal sources.
3.11.2.7	3	STARS-SSD-01995	The panel control electronics shall[3] be integrated with the display control panels.	(Derived)	(Derived)
3.11.2.7	4	STARS-SSD-01996	The display bezel for TCWs shall[4] fit closely such that foam gasket material is not needed with the top display bezel beveled down.	(Derived)	(Derived)
3.11.2.8	1	STARS-SSD-01997	The MCW shall[1] at a minimum contain a keyboard with standard "QWERTY" layout, a pointer device, a display resolution of 1920 x 1200 and a usable display area of 18.65 by 11.65 inches.	(Derived)	(Derived)
3.11.2.8	2	STARS-SSD-01998	The MCW display and data entry devices shall[2] have provisions to enable mounting in a desk top or mobile position, with the capability to be installed up to 500 feet from the TRACON or tower equipment room.	(Derived)	(Derived)
3.11.2.8	3	STARS-SSD-01999	All qualified MCW displays shall[3] be interchangeable with respect to replacement.	3.2.3	3.2.3.4 The system components must [STARS-234] be compatible with respect to form, fit, and function.
3.11.2.9	1	STARS-SSD-02000	The TDW ABC keyboard and trackball layout and functionality shall[1] be identical to that of the TCW with mounting options of either free standing enclosure or flush mounted.	3.1.8	3.1.8.1 All ATCT display functions, whether performed manually or automatically, must [STARS-101] result in the same or equivalent computer-human interface (CHI) as that of the TRACON TCW.
3.11.2.9	2	STARS-SSD-02001	Two versions of the three button trackball shall[2] be provided, one that permits mounting in the tower console shelf, the other that is a free-standing unit with both interpreting the left button as the ENTER key.	3.1.8	3.1.8.2 Each tower display suite must [STARS-102] process controller entries.
3.11.2.9	3	STARS-SSD-02002	An option shall[3] be provided to attach the free-standing trackball to either side of the keyboard.	(Derived)	(Derived)
3.11.2.9	4	STARS-SSD-02003	The trackball buttons shall[4] be a different color than the surrounding surface.	(Derived)	(Derived)
3.11.2.9	5	STARS-SSD-02004	A data entry set shall[5] contain, at a minimum, a keyboard with "QWERTY" layout per Figure 3.11.2.2-3 or ABC layout per Figure 3.11.2.2-1 and -2, and a pointer device.	3.1.8	3.1.8.2 Each tower display suite must [STARS-102] process controller entries.
3.11.2.9	6	STARS-SSD-02005	A data entry set shall[6] contain, at a minimum, a keyboard with standard COTS "QWERTY" layout and a pointer device. (STARS LITE only)	3.1.8	3.1.8.2 Each tower display suite must [STARS-102] process controller entries.

3.11.2.9	7	STARS-SSD-02006	The TDW shall[7] allow for the interface of up to three data entry sets with a single set being capable of fitting on the shelf of a typical tower cab console as presented in FAA Order 6480.7C, Appendix 3, figure 18.	3.1.8	3.1.8.2 Each tower display suite must [STARS-102] process controller entries.
3.11.2.9	8	STARS-SSD-02007	An articulated ceiling mount shall[8] be available that provides vertical adjustment of at least 18 inches, a lateral adjustment anywhere within a minimum of a 40 inch radius, 180 degree arc about the center post, a monitor tilt range between 0 and at least 30 degrees and swivel capability of +/- 90 degrees minimum for the flat panel display.	(Derived)	(Derived)
3.11.2.9	9	STARS-SSD-02008	It shall[9] be possible to mount the flat panel display to an existing DBRITE ceiling track or post, a freestanding table top mount with at least 30 degree tilt and +/- 90 degree swivel or a console mount with a variable tilt up to 30 degrees where 0 degrees is the angle of the console.	(Derived)	(Derived)
3.11.2.9	10	STARS-SSD-02009	An on/off switch for the flat panel display shall[10] be accessible when mounted in the existing console.	(Derived)	(Derived)
3.11.2.10	4	STARS-SSD-02010	The TDW shall[4] have a minimum display resolution of 1280 by 1024, with a minimum usable display area of 192 square inches, utilizing a flat panel, containing an on/off switch on the monitor and covering any other maintenance controls located on the front panel.	(Derived)	(Derived)
3.11.2.10	5	STARS-SSD-02011	The display on axis video Contrast Ratio (CR) shall[5] be greater than 6:1 for all ambient brightness conditions up to and including 6000 foot-candles incident illumination, normal to the screen, when video output is a flat white field using the following equation. CR = 100 * (Video Output + Background Brightness) Background Brightness	(Derived)	(Derived)
3.11.2.10	6	STARS-SSD-02012	Outer surface reflectivity through 400nm-700nm range (VIS) shall(6) be less than 0.25%.	(Derived)	(Derived)
3.11.2.10	7	STARS-SSD-02013	The monitor brightness shall[7] be at least 600 nits measured at screen center with a white background.	(Derived)	(Derived)
3.11.2.11	1	STARS-SSD-02014	The TDW shall[1] have the capability to interface with a supplemental display for the purpose of displaying the entered data and tabular data.	3.1.10	3.1.10.4 The system must [STARS-134] provide a message composition area at the TCPs.
3.11.2.11	2	STARS-SSD-02015	The supplemental display shall[2] have a minimum usable display area of 8 inches by 6 inches.	(Derived)	(Derived)

3.11.2.11	3	STARS-SSD-02016	All qualified TDW supplemental display monitors shall[3] be interchangeable with respect to replacement.	3.2.3	3.2.3.4 The system components must [STARS-234] be compatible with respect to form, fit, and function.
3.11.2.11	4	STARS-SSD-02017	The supplemental display shall[4] include a freestanding table top mount and also be capable of console mounting.	(Derived)	(Derived)
3.11.2.12	1	STARS-SSD-02018	Collocated tower installation shall[1] allow the placement of TDW(s) up to 5000 feet from the TRACON equipment room.	(Derived)	(Derived)
3.11.2.12	2	STARS-SSD-02019	Collocated tower installation shall[2] allow the placement of TDW(s) up to 15,000 feet from the TRACON equipment room (STARS ELITE only).	(Derived)	(Derived)
3.11.2.12	3	STARS-SSD-02020	TDW installation shall[3] allow the placement of display and data entry devices up to 500 feet from the associated TDW's processing equipment.	(Derived)	(Derived)
3.11.2.12	4	STARS-SSD-02021	A 4-way distribution amplifier/splitter shall[4] be available to permit putting the same image on up to four display monitors, where each display is within 25 cable feet of the splitter, including Supplemental Displays for systems with the exception of STARS LITEs.	(Derived)	(Derived)
3.11.2.13	1	STARS-SSD-02022	A General Purpose Workstation (GPW) data entry set shall[1] contain, at a minimum, a keyboard with standard “QWERTY” layout and a pointer device.	(Derived)	(Derived)
3.11.2.13	2	STARS-SSD-02023	The GPW display shall[2] have a minimum display resolution of 1280 by 1024, with a minimum usable display area of 14.375 by 11.5 inches.	(Derived)	(Derived)
3.11.2.13	3	STARS-SSD-02024	All qualified GPW displays shall[3] be interchangeable with respect to replacement.	3.2.3	3.2.3.4 The system components must [STARS-234] be compatible with respect to form, fit, and function.
3.11.2.13	4	STARS-SSD-02025	If a page printing device is provided, it shall[4] be controllable according to the conventions identified in the Adobe Systems PostScript (TM) standard, ASCII capable, interchangeable with any other qualified device and capable of supplying a notification for paper refill to the MCP.	3.1.12 3.2.3	3.1.12.4 The system must [STARS-184] provide ATC operational information, including graphical plots, in electronic printable form. 3.2.3.4 The system components must [STARS-234] be compatible with respect to form, fit, and function.
3.11.2.13	5	STARS-SSD-02026	If a plotter is provided, it shall[5] be supported and capable of producing E-size documents.	3.1.12	3.1.12.4 The system must [STARS-184] provide ATC operational information, including graphical plots, in electronic printable form.

3.11.2.13	6	STARS-SSD-02027	The independent calibrated national standard time source shall[6] have an accuracy relative to Coordinated Universal Time (UTC), as received from the Navstar GPS constellation, of within 1 msec.	3.1.11	3.1.11.5 All recorded data must [STARS-175] be time stamped and synchronized to a calibrated national standard time source.
3.11.2.13	7	STARS-SSD-02028	Hardware component configurations and equipment layout shall[7] permit LRU replacement without interruption of FSL or ESL, provide clear and unrestricted access for service, replacement, adjustments, test points, terminals and wiring.	3.3.2	3.3.2.2 Full Service availability must [STARS-322] be no less than .999995. 3.3.2.3 Emergency Full Service availability must [STARS-323] be no less than .999995.
3.11.3	1	STARS-SSD-02029	Data dictionary/directory implementations shall[1] comply with FIPS 156, Information Resource Dictionary Systems.	(Derived)	(Derived)
3.11.3	2	STARS-SSD-02030	SQL processors shall[2] comply with FIPS 127-2, Database Language SQL.	3.2.5	3.2.5.2 All applications must [STARS-252] be implemented in a Higher-Order Language (HOL).
3.11.3	3	STARS-SSD-02031	Client-server operations shall[3] be based on x-windows.	3.2.5	3.2.5.2 All applications must [STARS-252] be implemented in a Higher-Order Language (HOL).
3.11.3	4	STARS-SSD-02032	Computer network services shall[4] comply with FIPS 146-2, Profiles for Open Systems Internetworking Technologies (POSIT).	3.2.7	3.2.7.1 All LANs and wide area networks (WANs) must [STARS-271] be in accordance with Government approved standards identified in Appendix 3.
3.11.3	5	STARS-SSD-02033	Operating System shall[5] comply with the Portable Operating System Interface (POSIX) and/or Linux Standard Base (LSB) specifications per: a. IEEE 1003.1 Portable Operating System Interface (POSIX) b. ISO/IEC 9945 Portable Operating System Interface (POSIX) Base Specifications c. ISO/IEC 23360 Linux Standard Base (LSB) Core Specification	3.2.5	3.2.5.1 The operational software must [STARS-251] be platform transportable.
3.11.3	6	STARS-SSD-02034	C language processors shall[6] comply with FIPS 160C.	3.2.5	3.2.5.2 All applications must [STARS-252] be implemented in a Higher-Order Language (HOL).
3.11.3	7	STARS-SSD-02035	All modifications or additions to automation application software, as well as, all newly developed utilities, tools and diagnostics shall[7] be written in the HOL that is predominant in the majority of the existing automation application software code and complies with the FIPS standards as specified above.	3.2.5	3.2.5.2 All applications must [STARS-252] be implemented in a Higher-Order Language (HOL).
3.11.3	8	STARS-SSD-02036	Commercially Available Software (CAS) shall[8] be used without modification to the source code.	3.2.5	3.2.5.3 There must [STARS-253] be no modification to COTS software products without formal approval of the Government.

3.11.3	9	STARS-SSD-02037	The method of entry, usage and acceptable values for all parameters used to configure a CAS component shall[9] be documented.	3.2.5	3.2.5.4 COTS software modification documentation must [STARS-254] be of sufficient detail for software maintenance and transportability requirements.
3.11.4	1	STARS-SSD-02038	Any non-volatile storage device used for STARS application code storage shall[1] be reprogrammable and not require the device be removed to reprogram.	3.1.11	3.1.11.4 All operational data, including hardware configuration, must [STARS-174] be recorded on a removable, nonvolatile electronic medium.
3.11.5	1	STARS-SSD-02039	Electrical wiring used in the system shall[1] be in accordance with FAA-G-2100F, 3.1.2.1.	4.1.2	4.1.2.2 STARS must [STARS-342] comply with FAA-G-2100, Electronic Equipment, General Requirements.
3.11.5	2	STARS-SSD-02040	All AC supply line circuits and parts shall[2] be in accordance with FAA-G-2100F, 3.1.2.2 and its associated subsections. As an alternative to FAA-G-2100F 3.1.2.2.5, equipment connected by cord and plug to line power may be disconnected by means of the plug.	4.1.2	4.1.2.2 STARS must [STARS-342] comply with FAA-G-2100, Electronic Equipment, General Requirements.
3.11.5	3	STARS-SSD-02041	All system circuit protection shall[3] be in accordance with FAA-G-2100F, 3.1.2.3.	4.1.2	4.1.2.2 STARS must [STARS-342] comply with FAA-G-2100, Electronic Equipment, General Requirements.
3.11.5	4	STARS-SSD-02042	STARS equipment shall[4] accept power from a power source designed in accordance with FAA-G-2100F, 3.1.2.4 and its associated subsections.	4.1.2	4.1.2.2 STARS must [STARS-342] comply with FAA-G-2100, Electronic Equipment, General Requirements.
3.11.5	5	STARS-SSD-02043	Lightning protection, grounding, bonding, shielding, transient protection, and personnel protection shall[5] be in accordance with FAA-STD-19E, sections 4.3.4.1 and 4.3.5.2 with the exception of pre-existing equipment not equipped with grounding capability and all new equipment will be equipped with grounding capability with the following exceptions: a. Any commercial product enclosed in a plastic case for which there are no readily available alternatives b. Circuit/component cards within a grounded chassis c. Components powered by DC, USB or other low voltage device.	4.1.2	4.1.2.1 STARS must [STARS-341] comply with FAA-STD-019, Lighting and Surge Protection, Grounding, Bonding, and Shield Requirements for Facilities and Equipment.
3.11.5	6	STARS-SSD-02044	Primary power for equipment, except for the tower cab area, shall[6] be facility input power of 120 VAC or 208 VAC with voltage and frequency ranges as specified in FAA-G-2100F, 3.2.1.3, Table IV.	4.1.2	4.1.2.2 STARS must [STARS-342] comply with FAA-G-2100, Electronic Equipment, General Requirements.
3.11.5	7	STARS-SSD-02045	Primary Power for equipment in the tower cab shall[7] be facility input power of 120 VAC with voltage and frequency ranges as specified in FAA-G-2100F, 3.2.1.3, Table IV.	4.1.2	4.1.2.2 STARS must [STARS-342] comply with FAA-G-2100, Electronic Equipment, General Requirements.

3.11.5	8	STARS-SSD-02046	All electrical equipment shall[8] be in accordance with Federal Communications Commission 47CFR Part 15, Class A.	(Derived)	(Derived)
3.11.6	1	STARS-SSD-02047	Supports shall[1] be provided to keep cables organized, relieve stress, prevent sagging and cable access will either be from the top of the enclosure or below the floor, internal to the enclosure.	4.1.2	4.1.2.2 STARS must [STARS-342] comply with FAA-G-2100, Electronic Equipment, General Requirements.
3.11.6	2	STARS-SSD-02048	Electrical connectors external to LRUs and fastener hardware not provided as part of COTS equipment shall[2] conform to ANSI/EIA standards.	4.1.2	4.1.2.5 STARS must [STARS-345] comply with American National Standards Institute/Institute of Electrical and Electronics Engineers (ANSI/IEEE) Standard 1100-2005, Recommended Practice for Powering and Grounding Electrical Equipment, when selecting new components.
3.11.6	3	STARS-SSD-02049	All equipment, except workstation related equipment, shall[3] be mounted in enclosures which conform to ANSI/EIA 310-D.	(Derived)	(Derived)
3.11.6	4	STARS-SSD-02050	Front and rear access shall[4] be provided for all STARS enclosures.	4.1.2	4.1.2.2 STARS must [STARS-342] comply with FAA-G-2100, Electronic Equipment, General Requirements.
3.11.6	5	STARS-SSD-02051	All STARS equipment enclosure finishing shall[5] be in accordance with FAA-G-2100F, 3.3.1.2.6 and its associated subsections.	4.1.2	4.1.2.2 STARS must [STARS-342] comply with FAA-G-2100, Electronic Equipment, General Requirements.
3.11.6	6	STARS-SSD-02052	The physical footprint of the operational STARS TRACON equipment installed in the equipment room, excluding workstations, printers, and tower equipment shall[6] be no more than 260 square feet including front and rear access to equipment enclosures.	(Derived)	(Derived)
3.11.6	7	STARS-SSD-02053	The physical footprint of the operational STARS equipment installed in a tower equipment room, excluding workstations, printers, and TRACON equipment and including front and rear access to the equipment enclosures shall[7] be no more than: a. For 1-2 TDWs: 34 square feet b. For 3-5 TDWs: 51 square feet c. For more than 5 TDWs: 119 square feet.	(Derived)	(Derived)
3.11.6	8	STARS-SSD-02054	An additional 17 square feet of space shall[8] be allowed if Direct Sensor Feed is required for any tower.	(Derived)	(Derived)
3.11.6	9	STARS-SSD-02055	No unique storage space shall[9] be required by the STARS automation subsystem.	(Derived)	(Derived)

3.11.6	10	STARS-SSD-02056	Structural strength and rigidity of the STARS equipment enclosures, with access doors open or closed, shall[10] be such that normal handling in loading, shipping, unloading, and setting into position for installation, including normal operational and non-operational installation, will not result in any permanent set or deformation sufficient to impair the appearance or operation of the equipment nor to interfere with ease of maintenance, removal of units or components, ventilation, and operation of access doors.	(Derived)	(Derived)
3.11.6	11	STARS-SSD-02057	The floor loading conditions for each completed enclosure, cabinet, rack, workstation, and any supporting maintenance devices shall[11] be 125 pounds or less per square foot.	(Derived)	(Derived)
3.11.6	12	STARS-SSD-02058	No removable component of the STARS system shall[12] exceed the weight lifting requirements of FAA-G-2100F, 3.3.7.3, for male and female handling, unless the system provides mechanical devices for all necessary handling.	4.1.2	4.1.2.2 STARS must [STARS-342] comply with FAA-G-2100, Electronic Equipment, General Requirements.
3.11.6	13	STARS-SSD-02059	The maximum weight of the STARS ATC workstation equipment shall[13] be as follows: a. A completed TCW – no more than 800 pounds. (Exclude for Dismounted TCW) b. A TDW display – no more than 100 pounds.	(Derived)	(Derived)
3.12.1	1	STARS-SSD-02060	All requirements stated in 3.12.1 through 3.12.3 shall[1] apply to the CHI for all STARS operational users, including monitor and control operators.	3.1.8	3.1.8.1 All ATCT display functions, whether performed manually or automatically, must [STARS-101] result in the same or equivalent computer-human interface (CHI) as that of the TRACON TCW.
3.12.1	2	STARS-SSD-02061	All local and remote tower ATC operational data entry and display functions shall[2] have the same CHI, unless otherwise specified, as that of the TRACON TCW.	3.1.8	3.1.8.1 All ATCT display functions, whether performed manually or automatically, must [STARS-101] result in the same or equivalent computer-human interface (CHI) as that of the TRACON TCW.
3.12.2	1	STARS-SSD-02062	Any update to a data field shall[1] be propagated by the system to all affected views.	3.1.9	3.1.9.4 The system must [STARS-114] provide the controller with control over flight plan information.
3.12.2	2	STARS-SSD-02063	Tactile or audible feedback shall[2] be provided in response to all keystrokes and data entry actions with the exception of DCP actions and CAS data entry software that does not support keystroke feedback.	(Derived)	(Derived)

3.12.2	3	STARS-SSD-02064	Operator input from a TCP shall[3] continue to be displayed until there is a TCP action which causes its activation or removal.	3.1.10	3.1.10.4 The system must [STARS-134] provide a message composition area at the TCPs.
3.12.2	4	STARS-SSD-02065	Upper and lower case input at a TCP shall[4] be accepted as equivalent.	3.1.9	3.1.9.8 The system must [STARS-118] perform error checking on all input messages.
3.12.2	5	STARS-SSD-02066	Manually entered data, except for DCP actions, shall[5] be displayed for operator confirmation prior to system acceptance and processing.	3.1.10	3.1.10.4 The system must [STARS-134] provide a message composition area at the TCPs.
3.12.2	6	STARS-SSD-02067	A command which is under composition shall[6] be clearable and modifiable by the operator.	3.1.10	3.1.10.4 The system must [STARS-134] provide a message composition area at the TCPs.
3.12.2	7	STARS-SSD-02068	Data entry feedback for a command including execution of a function key at a TCP shall[7] be cleared automatically when the command is accepted.	3.1.10	3.1.10.4 The system must [STARS-134] provide a message composition area at the TCPs.
3.12.2	8	STARS-SSD-02069	All MCP data entry fields shall[8] initially be cleared or set to a default value when a window is opened.	(Derived)	(Derived)
3.12.2	9	STARS-SSD-02070	The pointer device at a TCP shall[9] be used as a cursor control and provide a method for selection of one or more displayed objects as command parameters.	3.1.9	3.1.9.7 The system must [STARS-117] allow for the use of context sensitive (im¬plied) functions and user actions.
3.12.2	10	STARS-SSD-02071	When the cursor rests on a selectable icon or button, feedback shall[10] be provided to indicate which object would be selected if the pointer device is used to make a selection.	3.1.9	3.1.9.7 The system must [STARS-117] allow for the use of context sensitive (im¬plied) functions and user actions.
3.12.2	11	STARS-SSD-02072	The ratio of pointer device to cursor movement (cursor speed) shall[11] be operator-selectable and proportional to device movement at the TCP and MCW with the cursor moving in the same direction as the pointer device.	3.1.9	3.1.9.9 The system must [STARS-119] provide for controller retrieval and use of preference sets.
3.12.2	12	STARS-SSD-02073	TCP input shall[12] relocate the cursor to an adapted location on the TCW or TDW.	3.1.9	3.1.9.5 The system must [STARS-115] provide a controller with the ability to manipulate the pre-sentation of information on an individual situation display. 3.1.9.9 The system must [STARS-119] provide for controller retrieval and use of preference sets.
3.12.2	13	STARS-SSD-02074	MCP input at an MCW shall[13] enable either the left or right mouse Enter button with the left button being the default.	3.1.9	3.1.9.9 The system must [STARS-119] provide for controller retrieval and use of preference sets.
3.12.2	14	STARS-SSD-02075	For QWERTY keyboards, a set of numeric keys shall[14] be separate from the alphanumeric keys and arranged in accordance with ANSI/HFES 100.	(Derived)	(Derived)

3.12.2	15	STARS-SSD-02076	The Enter Key shall[15] be located in a position that allows a fifth percentile female to use the numeric pad and activate the Initiate Function device without moving her hand.	(Derived)	(Derived)
3.12.2	16	STARS-SSD-02077	Function keys which are programmable through adaptation shall[16] be labeled.	3.1.9	3.1.9.9 The system must [STARS-119] provide for controller retrieval and use of preference sets.
3.12.3	1	STARS-SSD-02078	Data shall[1] be presented in a form that can be used immediately, with no further calculations, extrapolation, or references to extraneous sources.	3.1.10	3.1.10.2 The system must [STARS-132], based upon adaptation, display general information for the facility at each TCP.
3.12.3	2	STARS-SSD-02079	An indication shall[2] be provided to the operator whenever information is not displayed due to insufficient space in a view.	3.1.10	3.1.10.3 The system must [STARS-133] based upon adaptation, display the general status of the system at each TCP.
3.12.3	3	STARS-SSD-02080	All text shall[3] be presented in upper case, lower case, or mixed case.	3.1.10	3.1.10.2 The system must [STARS-132], based upon adaptation, display general information for the facility at each TCP.
3.12.3	4	STARS-SSD-02081	Resizing any view shall[4] maintain character and symbol sizes at discrete font sizes available in standard COTS/CAS products employed, whether the resizing is automatic or manually initiated.	3.1.10	3.1.10.2 The system must [STARS-132], based upon adaptation, display general information for the facility at each TCP.
3.12.3	5	STARS-SSD-02082	All TCP lists shall[5] follow these guidelines: a. The first character of each line is left justified and aligned vertically b. Each item is on a new line c. Blank areas are used to separate logical groups of information d. The current position of data that may be paged or scrolled is displayed at all times.	3.1.10	3.1.10.2 The system must [STARS-132], based upon adaptation, display general information for the facility at each TCP.
3.12.3	6	STARS-SSD-02083	In multiple page views, each page shall[6] be fully labeled.	3.1.10	3.1.10.2 The system must [STARS-132], based upon adaptation, display general information for the facility at each TCP.
3.12.3	7	STARS-SSD-02084	Information coding techniques and conventions shall[7] be used to discriminate among different classes of data and consistently applies respectively with redundant coding techniques used for all alert and cautionary information.	(Derived)	(Derived)
3.12.3	8	STARS-SSD-02085	All MCW views and TCW/TDW data items shall[8] have adaptable color coding schemes respectively applied.	3.1.10	3.1.10.2 The system must [STARS-132], based upon adaptation, display general information for the facility at each TCP.

3.12.3	9	STARS-SSD-02086	A geometric shape code shall[9] have a consistent meaning for all information displayed at TCPs, unless the symbol has been provided in vectorized form by the Government.	3.1.10	3.1.10.2 The system must [STARS-132], based upon adaptation, display general information for the facility at each TCP.
3.12.3	10	STARS-SSD-02087	All auditory signals shall[10] follow these guidelines: a. Be present when used with redundant visual display information b. Indicate the same information c. Have an adaptable duration of at least 0.5 seconds d. Have a unique meaning e. Be adaptable between 400 and 3000 Hz f. Modulate at an adaptable rate from one to eight cycles per second g. Have an alert volume in accordance with FAA-G-2100F, Section 3.3.6.5.5.1.	3.1.10 4.4.1	3.1.10.26 The system must [STARS-156] generate aural alarms based upon the adaptation of each individual TCP. 4.4.1.1 STARS must [STARS-421] comply with relevant health and safety standards identified in Appendix 3, including:
3.12.3	11	STARS-SSD-02088	The use of blinking or flashing shall[11] use the following guidelines: a. Be limited to search and identification tasks and to draw attention to time-critical events b. Operate at a duty cycle of 50 ± 10 percent c. Blink using an 'on' and 'off' states, where the 'on' state is set to the current intensity level of the corresponding brightness group, and the 'off' state is 50 ± 10 percent of the current intensity level d. Apply an adaptable rate between one and three cycles per second with a default of one e. Terminate blinking as a function of acknowledgment.	3.1.10 4.4.1	3.1.10.25 The system must [STARS-155] generate visual alerts based upon the adaptation of each individual facility. 4.4.1.1 STARS must [STARS-421] comply with relevant health and safety standards identified in Appendix 3, including:
3.12.3	12	STARS-SSD-02089	Temporary unavailability of a menu option shall[12] be indicated through information coding.	3.1.10	3.1.10.2 The system must [STARS-132], based upon adaptation, display general information for the facility at each TCP.
3.12.3	13	STARS-SSD-02090	The order of menu items shall[13] be adaptable.	3.1.10	3.1.10.2 The system must [STARS-132], based upon adaptation, display general information for the facility at each TCP.
3.12.4	1	STARS-SSD-02091	The requirements in 3.12.4 shall[1] be applicable to the MCP only.	(Derived)	(Derived)

3.12.4	2	STARS-SSD-02092	MCP control authority shall[2] operate as follows: a. Automatically log off if failure is detected b. Display a warning message and generate a momentary audible sound if inactivity is detected for a selectable period of time c. Log out the MCP if the inactivity warning is not acknowledged within an adaptable period of time d. Allow a third MCP to acquire control if two MCPs are already active.	3.1.10 3.1.14	3.1.9.6 The system must [STARS-116] allow for the control of global system information. 3.1.10.25 The system must [STARS-155] generate visual alerts based upon the adaptation of each individual facility. 3.1.14.1 System security must [STARS-201] be in accordance with the FAA and DoD standards identified in Appendix 3.
3.12.4	3	STARS-SSD-02093	The system shall[3] support either one or two MCWs, each capable of supporting both FSL/ESL or FSL/EFSL.	(Derived)	(Derived)
3.12.4	4	STARS-SSD-02094	The MCP shall[4] inform the user of the consequences and require a positive confirmation of a data destructive command/control action prior to its execution.	(Derived)	(Derived)
3.12.4	5	STARS-SSD-02095	The need for a confirmation prompt on non-data destructive MCP commands shall[5] be configurable in adaptation data.	(Derived)	(Derived)
3.12.4	6	STARS-SSD-02096	The capability shall[6] exist to reset both an aural & visual alarm via a single action or an aural alarm independent from its associated visual alarm.	3.1.10	3.1.10.27 The system must [STARS-157] enable and disable aural alarms at each TCP via manual entry.
3.12.4	7	STARS-SSD-02097	Based on pointer device selection, a set of context-sensitive menus shall[7] be displayed.	3.1.9 3.1.10	3.1.9.7 The system must [STARS-117] allow for the use of context sensitive (implied) functions and user actions. 3.1.10.2 The system must [STARS-132], based upon adaptation, display general information for the facility at each TCP.
3.12.4	8	STARS-SSD-02098	The ratio of pointer device to cursor movement (cursor speed) shall[8] be operator-selectable and proportional to device movement with the default setting at mid-range.	3.1.9	3.1.9.9 The system must [STARS-119] provide for controller retrieval and use of preference sets.
3.12.4	9	STARS-SSD-02099	Lists of data shall[9] be aligned vertically and presented as follows: a. If all numeric - right justified b. If alphabetic or alphanumeric - left justified or centered.	3.1.10	3.1.10.2 The system must [STARS-132], based upon adaptation, display general information for the facility at each TCP.

3.12.4	10	STARS-SSD-02100	All M&C data shall[10] be presented in the form of movable, resizable, opaque views displayed simultaneously with no restrictions as to view type or location.	(Derived)	(Derived)
3.12.4	11	STARS-SSD-02101	The MCP shall[11] use the following rules to determine the color of the top level "TCW" button: a. If at least one TCW is blinking Red and all other Online TCWs are Red - The top level "TCW" button will be blinking Red. b. If all Online TCWs are Red - The top level "TCW" button will be Red. c. If all Online TCWs are Green - The top level "TCW" button will be Green. d. If all TCWs are Gray - The top level "TCW" button will be Gray. e. If at least one, but not all, Online TCWs is Green - The top level "TCW" button will be yellow. f. If at least one Online TCW is Yellow - The top level "TCW" button will be Yellow.	(Derived)	(Derived)

3.12.4	12	STARS-SSD-02102	The MCP shall[12] use the following hierarchical rules to determine the color of the top level "TOWERS" button: a. If all TDWs are Gray - The top level "TOWERS" button will be Gray. b. If at least one TDW is blinking Red and all other Online TDWs are Red - The top level "TOWERS" button will be blinking Red. c. If at least one Tower Network Equipment Button is blinking Red and all other Tower Network Equipment Buttons are Red - The top level "TOWERS" button will be blinking Red. d. If all Online TDWs are Red - The top level "TOWERS" button will be Red. e. If all Tower Network Equipment is Red - The top level "TOWERS" button will be Red. f. If all online TDWs are Green and all Tower Network equipment is Green - The top level "TOWERS" button will be Green. g. If at least one, but not all, of the Online TDWs and the Tower Network Equipment buttons are Green - The "TOWERS" button will be Yellow. h. If at least one Online TDW is yellow - The "TOWERS" button will be Yellow.	(Derived)	(Derived)
3.12.5	1	STARS-SSD-02103	The Display Control Bar (DCB) shall[1] be located on the outside edge of the display screen on the top, bottom, left or right of the display.	3.1.10	3.1.10.2 The system must [STARS-132], based upon adaptation, display general information for the facility at each TCP.
3.12.5	2	STARS-SSD-02104	The DCB shall[2] function as follows: a. Can be enabled/disabled via keyboard sequence b.When enabled, the DCB will be transparent to targets and associated data c. When disabled, the DCB will be removed and that portion will be incorporated into the radar portion of the display.	3.1.9 3.1.10	3.1.9.5 The system must [STARS-115] provide a controller with the ability to manipulate the presentation of information on an individual situation display. 3.1.10.2 The system must [STARS-132], based upon adaptation, display general information for the facility at each TCP.

3.12.5	3	STARS-SSD-02105	When selected, an Auxiliary DCB shall[3] replace the main DCB and provide additional menu functions, have no further submenus, except confirmation submenus, have a means to return to the main menu and allow access to only one menu at a time.	3.1.9 3.1.10	3.1.9.5 The system must [STARS-115] provide a controller with the ability to manipulate the presentation of information on an individual situation display. 3.1.10.2 The system must [STARS-132], based upon adaptation, display general information for the facility at each TCP.
3.12.5	4	STARS-SSD-02106	The overall size of the DCB shall[4] be fixed with a nominal overall size of 75 ± 6 pixels by the height or width of the Radar Window.	3.1.10	3.1.10.2 The system must [STARS-132], based upon adaptation, display general information for the facility at each TCP.
3.12.5	5	STARS-SSD-02107	DCB buttons shall[5] be as follows: a. Standard - 75 ± 6 pixels wide by 75 ± 6 pixels high b. Narrow - 50 ± 4 pixels wide by 75 ± 6 pixels high horizontal or 75 ± 6 pixels wide by 50 ± 4 pixels high vertical c. Half high - 75 ± 6 pixels wide by 37 ± 3 pixels high.	3.1.10	3.1.10.2 The system must [STARS-132], based upon adaptation, display general information for the facility at each TCP.
3.12.5	6	STARS-SSD-02108	DCB overall focus shall[6] be displayed whenever the cursor is positioned over any portion of the DCB indicated by the cursor changing to the DCB cursor symbol and removed upon any of the following: a. Movement of the cursor outside the DCB when no action has been initiated b. Movement of the cursor outside the DCB when a DCB function has been completed c. Use of the CLEAR key when no DCB function is in progress d. An entry that causes an implied clear if the entry does not initiate a DCB function.	3.1.9 3.1.10	3.1.9.5 The system must [STARS-115] provide a controller with the ability to manipulate the presentation of information on an individual situation display. 3.1.10.2 The system must [STARS-132], based upon adaptation, display general information for the facility at each TCP.
3.12.5	7	STARS-SSD-02109	DCB button focus shall[7] be indicated whenever the cursor enters the button and will change the text color to highlight the button.	3.1.10	3.1.10.2 The system must [STARS-132], based upon adaptation, display general information for the facility at each TCP.
3.12.5	8	STARS-SSD-02110	Only a single DCB button at a time shall[8] be selectable by either the trackball or keyboard ENTER.	3.1.9	3.1.9.8 The system must [STARS-118] perform error checking on all input messages.

3.12.5	9	STARS-SSD-02111	DCB button focus, updated in response to the navigation within the DCB shall[9] be active prior to command initiation by either trackball movement or use of the keyboard.	3.1.9 3.1.10	3.1.9.5 The system must [STARS-115] provide a controller with the ability to manipulate the presentation of information on an individual situation display. 3.1.10.2 The system must [STARS-132], based upon adaptation, display general information for the facility at each TCP.
3.12.5	10	STARS-SSD-02112	DCB navigation, regardless of horizontal or vertical menu, shall[10] be provided by the cursor or the use of the "space" or "back space" keys on the keyboard.	3.1.9	3.1.9.5 The system must [STARS-115] provide a controller with the ability to manipulate the presentation of information on an individual situation display.
3.12.5	11	STARS-SSD-02113	The cursor shall[11] function as follows within the DCB: a. Displayed during navigation b. Locked within the submenu when displayed c. Displayed within the button at a fixed location after enter is executed.	3.1.9 3.1.10	3.1.9.8 The system must [STARS-118] perform error checking on all input messages. 3.1.10.2 The system must [STARS-132], based upon adaptation, display general information for the facility at each TCP.
3.12.5	12	STARS-SSD-02114	When the DCB is disabled or in use by another keyboard, certain menu keys shall[12] initiate their respective function, all others result in an error indication unless in ES mode or the DCB is re-enabled via the DCB menu key.	3.1.9	3.1.9.8 The system must [STARS-118] perform error checking on all input messages.
3.12.5	13	STARS-SSD-02115	DCB buttons shall[13] be organized into functional groups and the nominal size will be the same regardless of DCB orientation.	3.1.10	3.1.10.2 The system must [STARS-132], based upon adaptation, display general information for the facility at each TCP.
3.12.5	14	STARS-SSD-02116	The DCB button labels shall[14] conform as follows: a. Not change the size of the DCB or any DCB button irregardless of character size b. Permit up to 7 characters per line on a nominal size button c. All DCB button labels are upper case and adaptable d. The label of the preference set, map and radar site buttons will be assigned or adapted.	3.1.9 3.1.10	3.1.9.9 The system must [STARS-119] provide for controller retrieval and use of preference sets. 3.1.10.2 The system must [STARS-132], based upon adaptation, display general information for the facility at each TCP.

3.12.5	15	STARS-SSD-02117	DCB button types and characteristics shall[15] be defined as follows: a. Toggle buttons to provide ON/OFF functional capability 1. Button coloring and border shadowing will simulate button depression 2. The depressed state of the button will indicate the function is ON 3. Selection of a button not part of an exclusive group, will toggle it either from OFF to On or ON to OFF. b. Adjustment buttons to permit parameter adjustment for the corresponding function 1. Button coloring and border shadowing will simulate button depression 2. With the exception of PLACE CNTR, adjustment button selection will cause the increase or decrease of the value until it arrives at its minimum or maximum 3. While the adjustment is active the cursor will not be displayed and the adjustment value will be displayed 4. Specific parameter values may be entered via keyboard with depressing the ENTER key completing the adjustment 5. Implementation of the newly entered value will be presented either on the display or by aural feedback. c. Submenu selection buttons to select submenus. 1. Selection of a submenu button will display the submenu adjacent to the selected function, space permitting 2. Upon completion of the submenu function the submenu will be removed and the cursor returned to the Main Menu function button previously selected 3. Feedback to indicate the active function, except preference sets, will be via the display submenu.	3.1.9 3.1.10	3.1.9.5 The system must [STARS-115] provide a controller with the ability to manipulate the presentation of information on an individual situation display. 3.1.9.7 The system must [STARS-117] allow for the use of context sensitive (implied) functions and user actions.

3.12.5	16	STARS-SSD-02118	Entering the CLEAR key during the specified time shall[16] cause the specified event: a. When no parameter adjustment is in process and no submenu or Auxiliary DCB is selected the cursor will return to Home, regardless of Cursor Home/No Home selection b. When the Auxiliary DCB has focus and no parameter adjustment is in process and no submenu is selected, the Main DCB will be displayed with the cursor on the SHIFT button unless in FMA mode, in which case the cursor will return to home and the Auxiliary DCB remain displayed c. When a parameter adjustment is in process, the parameter will be reset to the value it had when the adjustment button was selected and the cursor returned to the adjustment button d. When a submenu is displayed and no parameter adjustment is in process, the submenu will be removed and the cursor returned to the parent submenu selection button.	3.1.9	3.1.9.5 The system must [STARS-115] provide a controller with the ability to manipulate the presentation of information on an individual situation display.
3.12.5	17	STARS-SSD-02119	An implied clear during the specified time shall[17] cause the specified event: a. The Menu function selected will initiate b. When the result of a function key selection and occurs while the DCB has focus, the cursor returns to Home, regardless of cursor Home/No Home selection c. Focus will be removed from the DCB when initiating an implied clear if the implied clear is not the result of a Menu key selection d. When the result of a Menu key selection, the cursor remains within the DCB button that corresponds to the selected Menu key e. When a parameter adjustment is in process, the parameter is reset to the value it had when the adjustment button was selected.	3.1.9	3.1.9.7 The system must [STARS-117] allow for the use of context sensitive (implied) functions and user actions.

3.12.5	18	STARS-SSD-02120	Execution of a keyboard command sequence shall[18] result in the clearing of any command under composition at any data entry set attached to the TCW/TDW and removal of any readout messages in all preview areas at the TCW/TDW.	3.1.9 3.1.10	3.1.9.5 The system must [STARS-115] provide a controller with the ability to manipulate the presentation of information on an individual situation display. 3.1.10.4 The system must [STARS-134] provide a message composition area at the TCPs.
3.12.6	1	STARS-SSD-02121	The RANGE adjustment button shall[1] provide the capability to change the radar window display range from a minimum of 6 nautical miles to a maximum of up to 256 with a default of 64 nautical miles.	3.1.9	3.1.9.1 The system must [STARS-111] change the range scale on a display via keyboard entry.
3.12.6	2	STARS-SSD-02122	Keyboard input shall[2] provide any integer range value up to the maximum adapted value in increments shown in Table 3.12.6-1.	3.1.9	3.1.9.1 The system must [STARS-111] change the range scale on a display via keyboard entry.
3.12.6	3	STARS-SSD-02123	The OFF-CNTR toggle button on the DCP and the CNTR key on the keyboard shall[3] cause the display to switch between the Center and Off-Center positions with the default radar center adapted per terminal area.	3.1.9	3.1.9.5 The system must [STARS-115] provide a controller with the ability to manipulate the presentation of information on an individual situation display.
3.12.6	4	STARS-SSD-02124	The PLACE CNTR button is used to redefine the Off-Center position and it shall[4] remove the cursor from the display and enable use of the trackball to move (“pan”) the radar display to the desired off-center position with selecting ENTER during this function having the following results: a. Define the stored off-center position as the current display center b. Return the cursor to the PLACE CNTR button c. Deselect the PLACE CNTR function d. Toggle the OFF CNTR button ON to indicate that the display is off-centered.	3.1.9	3.1.9.5 The system must [STARS-115] provide a controller with the ability to manipulate the presentation of information on an individual situation display. 3.1.9.7 The system must [STARS-117] allow for the use of context sensitive (implied) functions and user actions.
3.12.6	5	STARS-SSD-02125	DCP knobs (S-N and E-W) shall[5] cause the following: a. Offset the display in the South-North/East-West directions b. Toggle the OFF CNTR button ON to indicate that the display is off-centered c. Redefine the stored off-center position only when the PLACE CNTR function is active.	3.1.9	3.1.9.5 The system must [STARS-115] provide a controller with the ability to manipulate the presentation of information on an individual situation display.

3.12.6	6	STARS-SSD-02126	The offset sensitivity in the cardinal directions shall[6] be based on the current display range and the default radar window Off-Center and OFF-CNTR toggle position to be the center of the display.	3.1.9	3.1.9.5 The system must [STARS-115] provide a controller with the ability to manipulate the presentation of information on an individual situation display.
3.12.6	7	STARS-SSD-02127	TCP input and RR CNTR on the DCP shall[7] respectively enable/disable the display of range rings and toggle between range ring center/off center with the default range ring origin being adaptable per terminal area.	3.1.9	3.1.9.5 The system must [STARS-115] provide a controller with the ability to manipulate the presentation of information on an individual situation display.
3.12.6	8	STARS-SSD-02128	The PLACE RR button and RR button on the DCB shall[8] respectively enable redefining the range ring Off-center origin and permit the adjustment of the range ring interval to 2,5,10 or 20 nautical miles.	3.1.9	3.1.9.5 The system must [STARS-115] provide a controller with the ability to manipulate the presentation of information on an individual situation display.
3.12.6	9	STARS-SSD-02129	The selection of the PLACE RR button shall[9] move the cursor to the display center and in the case of ESL only, change the cursor to the special symbol.	3.1.9	3.1.9.5 The system must [STARS-115] provide a controller with the ability to manipulate the presentation of information on an individual situation display.
3.12.6	10	STARS-SSD-02130	The selection of the ENTER key while in the PLACE RR function shall[10] have the following results: a. Move the range ring origin to the current cursor position b. Return the cursor to the PLACE RR button c. Deselect the PLACE RR function d. In ESL only, remove the special cursor symbol.	3.1.9	3.1.9.5 The system must [STARS-115] provide a controller with the ability to manipulate the presentation of information on an individual situation display.
3.12.6	11	STARS-SSD-02131	All range rings shall[11] be drawn as single-pixel-width solid lines with the exception of the 20 nautical mile ring which if adapted will be highlighted.	3.1.10	3.1.10.15 The system must [STARS-145] display range marks.
3.12.6	12	STARS-SSD-02132	Up to 6 levels of weather in any combinations shall[12] be selectable via DCP or keyboard input with weather levels being received from selected radars being uniquely indicated by text labeling and background color change on the corresponding WX toggle in either single sensor or multisensory views.	3.1.9 3.1.10	3.1.9.5 The system must [STARS-115] provide a controller with the ability to manipulate the presentation of information on an individual situation display. 3.1.10.17 The system must [STARS-147] allow weather intensity to be selectable at the TCP for the 6 available processed weather levels.

3.12.6	13	STARS-SSD-02133	Individual brightness adjustment shall[13] be provided and the current brightness displayed for the following groups of data: a. Maps (Category A) b. Maps (Category B), including Geographic Restriction areas and associated text c. Data blocks, including Preview Area and cursor d. Position symbols (includes TCP and unassociated track symbols) e. Lists, including System Status Area f. Tools (Range/Bearing and Predicted Track lines, Minimum Separation and TPA J-Ring or Cone) (except ESL) g. Range rings h. Compass rose i. Primary targets, and fused-track target symbols j. Beacon targets k. Target histories l. Weather m. Weather contrast (stipples) n. Display control bar (tool bar), including all elements o. Background (except ESL) p. FMA mode only - AMZ map (except ESL) q. FMA mode only - NTZ map (except ESL) r. FMA mode only - Runway and course line map (except ESL) s. FMA mode only - Reference Lines map (except ESL) t. TPA Tools u. ATPA Tools	3.1.9	3.1.9.5 The system must [STARS-115] provide a controller with the ability to manipulate the presentation of information on an individual situation display.
3.12.6	14	STARS-SSD-02134	The Weather Contrast and Brightness controls shall[14] adjust the ratio of stipple brightness relative to background weather color brightness and the overall brightness of weather, including stippling respectively.	3.1.9	3.1.9.5 The system must [STARS-115] provide a controller with the ability to manipulate the presentation of information on an individual situation display.
3.12.6	15	STARS-SSD-02135	Brightness setting adjustment shall[15] be in steps of 5 with range as shown in Tables 3.12.6-2 and 3.12.6-3.	3.1.9	3.1.9.5 The system must [STARS-115] provide a controller with the ability to manipulate the presentation of information on an individual situation display.
3.12.6	16	STARS-SSD-02136	For the TDW in ESL mode, the brightness adjustment buttons will constitute a separate submenu that is enabled by the BRITE DCB button or keyboard key and the cursor placement when the submenu is opened shall[16] be in the upper leftmost button of the selected BRITE submenu.	3.1.9	3.1.9.5 The system must [STARS-115] provide a controller with the ability to manipulate the presentation of information on an individual situation display.

3.12.6	17	STARS-SSD-02137	The SITE submenu selection button shall[17] display the following based on identified condition: a. Current radar becomes unavailable – text and background color indicate failure b. Non-current radar unavailable – text (NA) and background color indicate failure c. Contain a toggle for each sensor site available for selection d. DONE button present to indicate completion of site selection e. Include a select DSF for those towers having that capability.	3.1.10	3.1.10.3 The system must [STARS-133] based upon adaptation, display the general status of the system at each TCP.
3.12.6	18	STARS-SSD-02138	The maximum number of radar sites shall[18] be as specified in Table 3.2.1.1.23-1 for FSL and E-FSL, including DSA mode for STARS ELITE and Table 3.2.1.2.10-1 for ESL.	3.2.8	3.2.8.1 The system must [STARS-281] have the capacity to connect to at least 16 surveillance sensors.
3.12.6	19	STARS-SSD-02139	Selection of a new site shall[19] cause the following to occur: a. Radar not available – retain the current selected radar b. Radar is available – automatic deselection of current site c. Radar not available – display an error message in the Preview Area (ESL mode only).	3.1.10	3.1.10.3 The system must [STARS-133] based upon adaptation, display the general status of the system at each TCP.
3.12.6	20	STARS-SSD-02140	Radar site selection shall[20] be available via the keyboard using the SITE menu button and entering adapted character(s) associated with the radar site and in ESL mode indicated by the depressed state of the toggle button.	3.1.9	3.1.9.6 The system must [STARS-116] allow for the control of global system information.
3.12.6	21	STARS-SSD-02141	Cursor placement when the submenu is opened shall[21] be in the button for the currently selected site or on the DONE button if no site is selected in ESL mode.	3.1.10	3.1.10.2 The system must [STARS-132], based upon adaptation, display general information for the facility at each TCP.
3.12.6	22	STARS-SSD-02142	The SITE button shall[22] contain the designator of the current radar selected.	3.1.10	3.1.10.2 The system must [STARS-132], based upon adaptation, display general information for the facility at each TCP.

3.12.6	23	STARS-SSD-02143	Map on/off indications shall[23] be consistently displayed across the DCP switches, the Main DCB Menu and the MAPS submenu, regardless of entry method, with the DCP and Main DCB Menu having six adaptation maps, with the MAPS submenu having either 32 buttons for a TCW or 2 sets of 16 for a TDW, a completion button, a CLR ALL button and the cursor located in the upper left most button.	3.1.10	3.1.10.2 The system must [STARS-132], based upon adaptation, display general information for the facility at each TCP.
3.12.6	24	STARS-SSD-02144	The following shall[24] be adaptable with regard to maps: a. Up to 31 toggle button assigned to the MAPS submenu b. Up to a design parameter of either map or category buttons per terminal area.	3.1.10	3.1.10.14 The system must [STARS-144] display geographic digital maps.
3.12.6	25	STARS-SSD-02145	Each entry in the displayed map list (including current and category) shall[25] contain at least the following data: a. An indication if the map is currently displayed b. The map number c. The map mnemonic d. The map description.	3.1.10	3.1.10.14 The system must [STARS-144] display geographic digital maps.
3.12.6	26	STARS-SSD-02146	The CHAR submenu shall[26] consist of the following: a. Be composed of adjustment type buttons b. Include a DONE button c. Upon selection place the cursor in the Data Blocks submenu.	3.1.9 3.1.10	3.1.9.5 The system must [STARS-115] provide a controller with the ability to manipulate the presentation of information on an individual situation display. 3.1.10.2 The system must [STARS-132], based upon adaptation, display general information for the facility at each TCP.
3.12.6	27	STARS-SSD-02147	The following character sizes per system shall[27] be available: a. 6 sizes for Data Blocks, Tools and Lists for FSL and E-FSL b. 3 sizes for DCB, a sub set of “a” for FSL and E-FSL c. 5 sizes for Data Blocks and Lists for ESL.	3.1.9 3.1.10	3.1.9.5 The system must [STARS-115] provide a controller with the ability to manipulate the presentation of information on an individual situation display. 3.1.10.2 The system must [STARS-132], based upon adaptation, display general information for the facility at each TCP.

3.12.6	28	STARS-SSD-02148	The CHAR submenu shall[28] individually control the character size for the following groups of data: a. Display control bar, FSL and E-FSL only b. Data blocks, including cursors and Preview Area c. Lists, including System Status Area d. Controller tools, FSL and E-FSL only e. Position symbols	3.1.9	3.1.9.5 The system must [STARS-115] provide a controller with the ability to manipulate the presentation of information on an individual situation display.
3.12.6	29	STARS-SSD-02149	Aural Alarm shall[29] have the following capabilities: a. A TCP input to test the audible alert volume b. A VOL button to adjust the volume from Off to 10 c. Adaptable duration of at least 0.5 seconds.	3.1.9 3.1.10	3.1.9.6 The system must [STARS-116] allow for the control of global system information. 3.1.10.26 The system must [STARS-156] generate aural alarms based upon the adaptation of each individual TCP.
3.12.6	30	STARS-SSD-02150	The DCB location selection between top, bottom, right or left shall[30] be provided using one of the four DCB location buttons (DCB TOP, DCB BOTTOM, DCB RIGHT, DCB LEFT).	3.1.9	3.1.9.5 The system must [STARS-115] provide a controller with the ability to manipulate the presentation of information on an individual situation display.
3.12.6	31	STARS-SSD-02151	Number of sensor history symbols adjustment between one and five shall[31] be provided using the HISTORY button.	3.1.9	3.1.9.5 The system must [STARS-115] provide a controller with the ability to manipulate the presentation of information on an individual situation display.
3.12.6	32	STARS-SSD-02152	The leader length and direction using the LDR and LDR DIR buttons shall[32] be displayed as selected with the leader length adjustable from 0 to 1.5 inches in eight steps and the leader direction being any of the 8 cardinal positions of N,NE,E,SE,S,SW,W and NW.	3.1.9	3.1.9.5 The system must [STARS-115] provide a controller with the ability to manipulate the presentation of information on an individual situation display.
3.12.6	33	STARS-SSD-02153	The Cursor control shall[33] be provided as follows: a. CURSOR HOME button toggles the mode On to return the cursor to the home position or Off leaving the cursor at its last location upon command completion b. CURSOR SPEED button will adjust speed from 1 to 10 c. Movement of the cursor will be anywhere within the Radar Window including the DCB d. Menu key action will be accepted independent of cursor position.	3.1.9	3.1.9.5 The system must [STARS-115] provide a controller with the ability to manipulate the presentation of information on an individual situation display.

3.12.6	34	STARS-SSD-02154	The MODE submenu shall[34] provide selection of TCW/TDW mode with the following capabilities: a. In FS workstation mode to then select FS, EFS or ES, FS Training or FMA b. In FS workstation mode indicate if ES is unavailable with NA in corresponding button c. In ES workstation mode to then select ES or ES Training d. In ES Workstation mode indicate if FS is unavailable with NA in corresponding button e. In EFS workstation mode to then select FS, EFS, EFS Training, FMA or DSF f. In FS workstation mode for STARS ELITE to then select FS, FS Training, FMA or DSA g. In any mode indicate the current state in the MODE button and by the depressed state of the selected submenu button h. In any mode place the cursor in the currently selected button i. In any mode provide confirmation of the accepted mode selection.	3.1.10	3.1.10.21 Each TCW must [STARS-151] have selectable presentation modes.
3.12.6	35	STARS-SSD-02155	The compass rose, oriented toward magnetic north, shall[35] be displayed in a rectangular format bounded by the edges of the screen and the inside edge of the DCB (if displayed) marked with a tic every 5 degrees and a degree label every ten.	3.1.10	3.1.10.2 The system must [STARS-132], based upon adaptation, display general information for the facility at each TCP.
3.12.6	36	STARS-SSD-02156	In FMA mode, an adjustment for selection of a specific FMA function shall[36] be performed using the following: a. Active Monitored Zone (AMZ) from the adapted AMZ's using the AMZ button b. Magnification ratio using the MAG button c. Voice alert volume using the VOICE button d. Track prediction vector length using the PTL LNTH button e. Disable all alerts using the NTZ ALL button f. Test of voice alert speaking capability using the VOICE CHECK button g. Enable/Disable for individual NTZs using the NTZ 1, NTZ 2 and NTZ 3 buttons.	3.1.9	3.1.9.5 The system must [STARS-115] provide a controller with the ability to manipulate the presentation of information on an individual situation display.

3.12.6	37	STARS-SSD-02157	In FMA mode, an independent selection of data block leader line direction shall[37] be provided for each runway adapted to the AMZ and DCB buttons will be labeled with the adapted runway designations.	3.1.9	3.1.9.7 The system must [STARS-117] allow for the use of context sensitive (implied) functions and user actions.
3.12.6	38	STARS-SSD-02158	Functions unique to TSAS will be accessible via DCB buttons only when TSAS is adapted for the site. The following TSAS functions shall[38] be selectable via a DCB button: a. Mode regarding non-Timeline tools On/Off b. Slot Marker size c. Slot Marker and Timeline for flight and non-flight data brightness, excluding "Off" d. Display of Early / Late indication e. Air Speed presentations of None, Track Only, Slot Only, Track and Slot f. Advised Air Speed threshold g. Runway Sequence numbers h. Trajectory brightness i. Character size for flight and non-flight data j. Individual pre-adapted and currently selected Timeline displays per TCP On/Off k. Selection of Timelines per TCP via DCB or keyboard entry	3.1.9	3.1.9.5 The system must [STARS-115] provide a controller with the ability to manipulate the presentation of information on an individual situation display.
3.12.7	1	STARS-SSD-02159	The Preview Area shall[1] display the following: a. Operator prompts b. Mnemonics for function entries including DCB functions c. Error messages d. Nothing upon command initiation or the CLEAR key selected.	3.1.10	3.1.10.3 The system must [STARS-133] based upon adaptation, display the general status of the system at each TCP. 3.1.10.6 The system must [STARS-136] display data entry error messages at each TCP.
3.12.7	2	STARS-SSD-02160	Automatic message clearing of the Preview Area shall[2] operate as follows: a. When enabled, informational and error messages will be removed after an adapted duration b. TCP input will enable or inhibit the function c. Initial setting of the function will be enabled.	3.1.10	3.1.10.3 The system must [STARS-133] based upon adaptation, display the general status of the system at each TCP. 3.1.10.6 The system must [STARS-136] display data entry error messages at each TCP.

3.12.7	3	STARS-SSD-02161	In ES workstation mode, Data Entry Sets shall[3] function as follows: a. Interaction with the DCB will only be from the “core” set b. The cursor symbol for “non-core” sets will remain unchanged when within the DCB c. The use of menu keys, with the exception of the core menu key, from “non-core” sets will leave the DCB function selection unchanged and cause an error message to be displayed in the Preview Area d. The “non-core” sets will continue to provide commands regardless of whether the set has focus in the DCB e. When the cursor corresponding to the “core” set is not in the DCB, any set will be able to become the core by selecting the CORE menu key.	3.1.9 3.1.10	3.1.9.7 The system must [STARS-117] allow for the use of context sensitive (implied) functions and user actions. 3.1.10.6 The system must [STARS-136] display data entry error messages at each TCP.
3.12.7	4	STARS-SSD-02162	When enabled the following shall[4] be displayed in single sensor slant range view: a. A Search Target Extent, for search-only track reports b. A Beacon Target Extent, for beacon-only track reports c. A Beacon-Reinforced Target, for a track with both search and beacon track reports.	3.1.10	3.1.10.22 Each TCW must [STARS-152] have a single sensor slant range display presentation mode.
3.12.7	5	STARS-SSD-02163	Per Figure 3.12.7-1, the Search and Beacon Target Extent shall[5] be displayed for search centered at the reported target position and be oriented with dimension A perpendicular to a radial from the reporting radar origin through the target position and for beacon at an adaptable distance E beyond the reported target position and oriented with dimension C perpendicular to a radial from the reporting radar origin through the target position.	3.1.10	3.1.10.7 The system must [STARS-137] display a target indicator at the position of each surveillance target received in single sensor mode. 3.1.10.22 Each TCW must [STARS-152] have a single sensor slant range display presentation mode.

3.12.7	6	STARS-SSD-02164	In accordance with Table 3.12.7-1, the following shall[6] apply: a. The target symbol for correlated targets are adaptable as a function of target slant range b. The value of parameter “A” for correlated targets is the linear interpolation of the dimensions derived for the two ranges that bracket the target range c. Correlated/uncorrelated targets beyond the maximum slant range are displayed via a fixed-size symbol of a target located at the maximum range d. The correlated search target azimuth extent is the larger of 0.125 nmi and the extent calculated using parameter “G”.	3.1.10	3.1.10.7 The system must [STARS-137] display a target indicator at the position of each surveillance target received in single sensor mode. 3.1.10.22 Each TCW must [STARS-152] have a single sensor slant range display presentation mode.
3.12.7	7	STARS-SSD-02165	The dimensions of the target symbol for correlated targets in single senor slant range view shall[7] be determined using either: a. PAM adaptation parameters or b. Standard adaptation parameters of Table 3.12.7-1 or c. Standard adaptation parameters of Table 3.12.7-1 as selected per 3.2.1.1.10.9.15.	3.1.10	3.1.10.7 The system must [STARS-137] display a target indicator at the position of each surveillance target received in single sensor mode. 3.1.10.22 Each TCW must [STARS-152] have a single sensor slant range display presentation mode.
3.12.7	8	STARS-SSD-02166	The search target azimuth extent shall[8] be half that of dimension "A" of an equivalent correlated radar target, but not less than an adaptable value, if all of the following are true: a. It is either an uncorrelated radar target, or it is a correlated radar target whose track position symbol has been inhibited from display b. It is not reported as correlated by an ASR-9 or ASR-11 radar c. Its slant range from the radar is not beyond the maximum specified in Table 3.12.7-1.	3.1.10	3.1.10.7 The system must [STARS-137] display a target indicator at the position of each surveillance target received in single sensor mode. 3.1.10.22 Each TCW must [STARS-152] have a single sensor slant range display presentation mode.
3.12.7	9	STARS-SSD-02167	Target Extent components shall[9] be displayed as filled rectangles without borders.	3.1.10	3.1.10.7 The system must [STARS-137] display a target indicator at the position of each surveillance target received in single sensor mode. 3.1.10.22 Each TCW must [STARS-152] have a single sensor slant range display presentation mode.

3.12.7	10	STARS-SSD-02168	Target Symbol in Single and Multi-sensor reported ground range views shall[10] be as follows: a. A rectangular symbol oriented with the long side perpendicular to the track heading will be used for a tracked target b. The target symbol size will be fixed with respect to target and display range c. The target symbol will be filled for correlated targets within an adapted range or outlined if beyond that range d. The target symbol for uncorrelated or correlated by an ASR-9 or 11 will be a filled square.	3.1.10	3.1.10.7 The system must [STARS-137] display a target indicator at the position of each surveillance target received in single sensor mode. 3.1.10.8 The system must [STARS-138] display a target indicator at the composite position of each surveillance target received in multi-sensor and Fusion modes. 3.1.10.23 Each TCW must [STARS-153] have a single sensor ground plane display presentation mode.
3.12.7	11	STARS-SSD-02169	In FMA mode a target symbol shall[11] be displayed as a circle of fixed adaptable radius, with an adaptable line thickness, centered on the target reported or coasted position.	3.1.4 3.1.10	3.1.4.5 The system must [STARS-055] provide for the adaptability of the FMA display mode. 3.1.10.7 The system must [STARS-137] display a target indicator at the position of each surveillance target received in single sensor mode. 3.1.10.8 The system must [STARS-138] display a target indicator at the composite position of each surveillance target received in multi-sensor and Fusion modes.
3.12.7	12	STARS-SSD-02170	The non-radar target symbol in slant range view shall[12] be displayed as a filled circle of fixed adaptable radius.	3.1.10	3.1.10.22 Each TCW must [STARS-152] have a single sensor slant range display presentation mode.
3.12.7	13	STARS-SSD-02171	The Fused target location symbol shall[13] be displayed with the center of the system track's extrapolated position at the time of display updated as a filled non-directional symbol whose size is derived from a set of adaptable parameters, and from the most recent system track data as follows: a. Using the target report, the tracker will compute a positional uncertainty value as described in Table 3.12.7-2. b. That value and the associated sensor support, the eligibility of the symbol for display as determined and described in Table 3.12.7-5. c. Using the adaptable parameters defined in shall[18], the size of the displayed symbol will be determined per Table 3.12.7-5.	3.1.10	3.1.10.8 The system must [STARS-138] display a target indicator at the composite position of each surveillance target received in multi-sensor and Fusion modes.

3.12.7	14	STARS-SSD-02172	A system-wide adaptable parameter shall[14] define the level of opacity for the displayed Fused Terminal Separation and Intermediate Separation target location symbols.	3.1.10	3.1.10.8 The system must [STARS-138] display a target indicator at the composite position of each surveillance target received in multi-sensor and Fusion modes.
3.12.7	15	STARS-SSD-02173	If the Fused target location symbol for an associated track is inhibited from display due to excessive positional uncertainty then an adaptable Non-Radar Separation (Default = "TRK") indication shall[15] be displayed in the track's full or partial data block.	3.1.10	3.1.10.8 The system must [STARS-138] display a target indicator at the composite position of each surveillance target received in multi-sensor and Fusion modes.
3.12.7	16	STARS-SSD-02174	The Fused target location symbol shall[16] maintain the following characteristics: a. For Unassociated tracks, inhibit from display if the track is laterally coasting b. For Associated tracks, inhibit from display due to lateral coasting then display an adaptable coast indication in the data block c. For Associated tracks, that meet the requirements for Increased Separation display an indication (Default = "ISR") in the data block d. For non-established primary tracks, uncorrelated target reports (plots) and test target reports display the low confidence primary target location symbol.	3.1.10	3.1.10.8 The system must [STARS-138] display a target indicator at the composite position of each surveillance target received in multi-sensor and Fusion modes.
3.12.7	17	STARS-SSD-02175	In fused display view, the TCW/TDW shall[17] display a target location symbol for non-established primary tracks and uncorrelated target reports (plots) from only the adapted preferred sensor within the adapted surveillance/altimeter data tile.	3.1.10	3.1.10.8 The system must [STARS-138] display a target indicator at the composite position of each surveillance target received in multi-sensor and Fusion modes. 3.1.10.24 Each TCW must [STARS-154] have an integrated multiple sensor display presentation mode (FUSION).

3.12.7	18	STARS-SSD-02176	Adaptable parameters for Fused Track Symbol size and separation eligibility shall[18] be defined as follows: a. Minimum Pixel Dimension is the minimum dimension of the target location symbol, measured in pixels b. Fused Symbol Distance Dimension is the nominal dimension of the target location symbol used for displays that do not have parallel approach monitor mode selected, measured in distance c. Reduced Fused Symbol Distance Dimension is the nominal dimension of the reduced size target location symbol used for displays that have parallel approach monitor mode selected, measured in distance d. Confidence Level is a desired level of statistical probability that the target position is contained within the displayed symbol e. Terminal Separation Threshold is the maximum allowable horizontal positional uncertainty below which a track is eligible for Standard Terminal separation procedures f. Intermediate Separation Threshold is the maximum allowable horizontal positional uncertainty below which a track is eligible for Increased Separation procedures g. Low Confidence Primary Symbol Ratio is the dimension of the target location symbol that is displayed for unassociated primary tracks whose computed positional uncertainty diameter exceeds the adapted Intermediate Separation Threshold h. Primary Symbol Maximum Pixel Dimension is the maximum dimension of the low confidence primary target location symbol, measured in pixels i. Aircraft Wingspan is the additional uncertainty that is applied to allow for the size of the largest aircraft.	3.1.10	3.1.10.8 The system must [STARS-138] display a target indicator at the composite position of each surveillance target received in multi-sensor and Fusion modes.

3.12.7	19	STARS-SSD-02177	A Fused track shall[19] become eligible for Standard Terminal Separation if it is supported for a site-adapted sensor-specific eligibility interval by at least one of the following: a. Reports from a radar whose slant range is less than the system adapted value for that type of radar and if applicable, radar mode and type of report per Table 3.12.7-3 b. Reports from a multilateration sensor c. ADS-B reports that meet all of the following criteria: 1. The elapsed time since the last target report for this track from this sensor is less than the adapted high update rate for the sensor 2. Link Version # is greater than 1 3. NIC is present 4. NIC is not less than the system adapted threshold 5. NACp is present 6. NACp is not less than the system adapted threshold d. ADS-B reports that meet all of the following criteria: 1. that the elapsed time since the last target report for this track from this sensor is less than the adapted high update rate for the sensor 2. Link Version # is greater than 1 3. NACp is not present 4. NIC is present 5. NIC is not less than the system adapted threshold 6. NIC is not less than the system adapted threshold.	3.1.3	3.1.3.1 The system must [STARS-031] detect unsafe proximity between tracked aircraft pairs regardless of sensor origin.
3.12.7	20	STARS-SSD-02178	A Fused track's eligibility for Standard Terminal Separation shall[20] cease if reports of the required type specified above are not received for an adapted interval and will remain ineligible for at least an adapted period of time.	3.1.3	3.1.3.1 The system must [STARS-031] detect unsafe proximity between tracked aircraft pairs regardless of sensor origin.

3.12.7	21	STARS-SSD-02179	A Fused track shall[21]become eligible for Increased Separation if it is supported for an adapted eligibility interval by at least one of the following: a. Reports from a radar b. Reports from a multilateration sensor c. ADS-B reports that meet all of the following criteria: 1. Link Version # is greater than 1 2. NIC is present 3. NIC is not less than the system adapted threshold 4. NACp is present 5. NACp is not less than the system adapted threshold d. ADS-B reports that meet all of the following criteria: 1. Link Version # is greater than 1 2. NACp is not present 3. NIC is present 4. NIC is not less than the system adapted threshold 5. NIC is not less than the system adapted threshold	3.1.3	3.1.3.1 The system must [STARS-031] detect unsafe proximity between tracked aircraft pairs regardless of sensor origin.
3.12.7	22	STARS-SSD-02180	A Fused track's eligibility for Increased Separation shall[22] cease if reports of the required type specified above are not received for an adapted eligibility interval.	3.1.3	3.1.3.1 The system must [STARS-031] detect unsafe proximity between tracked aircraft pairs regardless of sensor origin.
3.12.7	23	STARS-SSD-02181	The software shall[23] use the Fused track's eligibility for Standard Terminal Separation, Increased Separation, and its computed positional uncertainty, to determine whether a symbol is displayable per Table 3.12.7-5.	3.1.3	3.1.3.1 The system must [STARS-031] detect unsafe proximity between tracked aircraft pairs regardless of sensor origin.
3.12.7	24	STARS-SSD-02182	The track Position Symbol shall[24] be the same color as the data block, include a black outline around each character and displaced from the reported target position by adaptable parameter "F" along the radial from the radar origin as illustrated in Figure 3.12.7-1 except in ES workstation mode or when a track is not displayed with a target extent symbol, in which case it is centered on the target reported position.	3.1.10	3.1.10.7 The system must [STARS-137] display a target indicator at the position of each surveillance target received in single sensor mode. 3.1.10.8 The system must [STARS-138] display a target indicator at the composite position of each surveillance target received in multi-sensor and Fusion modes.

3.12.7	25	STARS-SSD-02183	The following symbols shall[25] be used for the Position Symbol for the condition indicated: [TABLE] Position Symbol Specified Condition Open Diamond Primary Track (except ESL) Open Square Select Code with Mode C Open Triangle Select Code without Mode C Asterisk Non-Select Code with Mode C Plus Non-Select Code without Mode C	3.1.10	3.1.10.7 The system must [STARS-137] display a target indicator at the position of each surveillance target received in single sensor mode. 3.1.10.8 The system must [STARS-138] display a target indicator at the composite position of each surveillance target received in multi-sensor and Fusion modes.
3.12.7	26	STARS-SSD-02184	The display of the position symbol shall[26] be as follows per the condition specified: a. If an unassociated track is squawking a matching site adapted beacon code, it will be superseded by an adapted single character position symbol b. If an unassociated primary track is coasting, it will have the position symbol inhibited c. If unassociated primary tracks are inhibited at a position, it will have the position symbol inhibited d. If an unassociated primary track has not reached the adapted Firmness Threshold, it will have the position symbol inhibited.	3.1.10	3.1.10.7 The system must [STARS-137] display a target indicator at the position of each surveillance target received in single sensor mode. 3.1.10.8 The system must [STARS-138] display a target indicator at the composite position of each surveillance target received in multi-sensor and Fusion modes.
3.12.7	27	STARS-SSD-02185	Following track establishment, a Firmness Count shall[27] be maintained for each update of a primary track until it reaches an adaptable Firmness Threshold which will be selected as follows: a. If the track is not currently in any Target Processing Volume then the system-wide adapted Firmness Threshold will be used; b. If the track is currently in one or more Target Processing Volumes then the Firmness Threshold will be the largest of any value adapted for the volumes or the system-wide value.	3.1.2	3.1.2.1 The system must [STARS-011] automatically track all primary surveillance targets within a geographic area defined by SA parameters.
3.12.7	28	STARS-SSD-02186	For any given position report, one target history symbol, consisting of a single, filled circle 7 pixels in diameter, shall[28] be displayed.	3.1.10	3.1.10.7 The system must [STARS-137] display a target indicator at the position of each surveillance target received in single sensor mode. 3.1.10.8 The system must [STARS-138] display a target indicator at the composite position of each surveillance target received in multi-sensor and Fusion modes.

3.12.7	29	STARS-SSD-02187	A track's position history shall[29] be displayed if display of histories is enabled, the minimum TCP-selected display history interval has elapsed, and any of the following conditions apply: a. The display is in single-sensor view, the track is an established non-primary track, and the update to the track's position was sourced by the selected sensor. (See note 1 below). b. The display is in single-sensor view, the track is an established primary track, the track is displaying a track position symbol and the update to the track's position was sourced by the selected sensor. (See note 2 below). c. The display is in multi-sensor, or fused-track view, and the track is an established non-primary track. (See note 1 below). d. The display is in multi-sensor or fused-track view, and the track is an established primary track, and the track is displaying a track position symbol. (See note 2 below). Notes: 1. Target position histories are not displayed for a non-established track, but upon establishment of a non-primary track, the history positions prior to establishment will be displayed. 2. Target position histories are not displayed for a primary track whose track position symbol has been inhibited from display. 3. Target position histories are not displayed for a pseudo track or a coasting track.	3.1.10	3.1.10.7 The system must [STARS-137] display a target indicator at the position of each surveillance target received in single sensor mode. 3.1.10.8 The system must [STARS-138] display a target indicator at the composite position of each surveillance target received in multi-sensor and Fusion modes.
3.12.7	30	STARS-SSD-02188	History Symbols shall[30] be displayed as follows: a. Each history symbol is centered on the corresponding previous target position b. The apparent brightness of history data deceases once per scan to emulate phosphor decay c. A missed report for a target, which will not have its history notation displayed, will be included in the count of displayed history notations for that target.	3.1.10	3.1.10.7 The system must [STARS-137] display a target indicator at the position of each surveillance target received in single sensor mode. 3.1.10.8 The system must [STARS-138] display a target indicator at the composite position of each surveillance target received in multi-sensor and Fusion modes.
3.12.7	31	STARS-SSD-02189	If the target's altitude is outside the altitude filter limits, then the associated history trail shall[31] be inhibited from display for the following: a. ES and ES training workstation modes b. FS workstation mode and the target does not display a data block.	3.1.2	3.1.2.4 The system must [STARS-014] perform altitude tracking, using target reports from both single and multisensory surveillance systems.

3.12.7	32	STARS-SSD-02190	Weather level data shall[32] be displayed as follows: a. Filled background aras with or without stipple patterns with color coding to discriminate weather intensity levels b. Weather levels will be isolated and determinable based on the use of stipple and color coding c. Aircraft data blocks, radar target and position symbols, history trails, lists and map data will be visible through any weather data.	3.1.10	3.1.10.17 The system must [STARS-147] allow weather intensity to be selectable at the TCP for the 6 available processed weather levels. 3.1.10.18 The system must [STARS-148] display all targets through the selected levels of weather intensity.
3.12.7	33	STARS-SSD-02191	The following cursor symbols shall[33] be used: Symbol Purpose + Main keyboard cursor symbol Second (handoff) keyboard cursor symbol (circle with 4 interior tic marks) × Third keyboard cursor symbol (letter "X") ╬ Special cursor symbols for range ring center selection in ES ↖ DCB active cursor symbol – Used to indicate Display Control Bar focus	3.1.9	3.1.9.5 The system must [STARS-115] provide a controller with the ability to manipulate the presentation of information on an individual situation display.
3.12.7	34	STARS-SSD-02192	All lists, including Preview and System Status Area shall[34] maintain the following transparency and positioning capabilities: a. Be transparent and without borders b. Be able to use the trackball to select a data block behind them c. Be able to show and relocate all lists and windows d. Be able to hide all lists except, System Status Area, Coast/Suspend, Coordination and LA/CA/MCI lists e. Ensure that no two lists or windows overlap, if so adapted.	3.1.9 3.1.10	3.1.9.3 The system must [STARS-113] provide for controller manipulation of tracked aircraft status. 3.1.9.4 The system must [STARS-114] provide the controller with control over flight plan information. 3.1.9.5 The system must [STARS-115] provide a controller with the ability to manipulate the presentation of information on an individual situation display. 3.1.10.3 The system must [STARS-133] based upon adaptation, display the general status of the system at each TCP.

3.12.7	35	STARS-SSD-02193	Displayed brightness of all members of a control group shall[35] be the control setting, with percentage range as specified in Table 3.12.6-2, multiplied by the maximum values of the RGB color coordinates as defined in Table 3.12.7-7 with the items listed in Table 3.12.7-6 displayed in individually adaptable unique colors and those colors defined by RGB coordinates that are adaptable and defined for development purposes in Table 3.12.7-7.	3.1.9	3.1.9.5 The system must [STARS-115] provide a controller with the ability to manipulate the presentation of information on an individual situation display.
3.12.7	36	STARS-SSD-02194	The Ident indication in a data block shall[36] be displayed as follows: a. When the special position indicator on an aircraft indicates an Ident condition b. The data block of an unassociated target will blink when that aircraft indicates an Ident condition c. Ident indication is displayed for targets within the altitude filter independent of the reported beacon code.	3.1.10	3.1.10.11 The system must [STARS-141] display aircraft information in the form of data blocks.

3.13.1.1	1	STARS-SSD-02195	Two-way interfaces shall[1] supply data to and receive data from external systems.	3.1.1 3.1.7	3.1.1.1 The system must [STARS-001] accept aircraft position and weather data simultaneously from multiple surveillance systems within geographic areas defined by site adaptable (SA) parameters. 3.1.7.1 The system must [STARS-081] receive and transmit NAS Flight Plan information between STARS and an Air Route Traffic Control Center (ARTCC). 3.1.7.2 The system must [STARS-082] process Arrival, Departure, and Overflight Flight Plans generated internally by an adjacent Terminal facility. 3.1.7.3 The system must [STARS-083] process Arrival, Departure, and Overflight Flight Plans generated internally by an ARTCC. 3.1.7.5 The system must [STARS-085] initiate and accept automatic handoffs of flights, based upon adaptation criteria, between itself and an ARTCC. 3.1.7.7 The system must [STARS-087] initiate and accept automatic handoffs of flights, based upon adaptation criteria, between itself and an adjacent Terminal facility.
3.13.1.1	2	STARS-SSD-02196	A separate primary and backup communications path shall[2] be implemented for each two-way interface.	3.3.2	3.3.2.1 The system design must [STARS-321] preclude single point failures, excluding TCWs, MCWs, and TDWs.

3.13.1.1	3	STARS-SSD-02197	Two-way interfaces shall[3] be established via the AIG.	3.1.1 3.1.7	3.1.1.1 The system must [STARS-001] accept aircraft position and weather data simultaneously from multiple surveillance systems within geographic areas defined by site adaptable (SA) parameters. 3.1.7.1 The system must [STARS-081] receive and transmit NAS Flight Plan information between STARS and an Air Route Traffic Control Center (ARTCC). 3.1.7.2 The system must [STARS-082] process Arrival, Departure, and Overflight Flight Plans generated internally by an adjacent Terminal facility. 3.1.7.3 The system must [STARS-083] process Arrival, Departure, and Overflight Flight Plans generated internally by an ARTCC. 3.1.7.5 The system must [STARS-085] initiate and accept automatic handoffs of flights, based upon adaptation criteria, between itself and an ARTCC. 3.1.7.7 The system must [STARS-087] initiate and accept automatic handoffs of flights, based upon adaptation criteria, between itself and an adjacent Terminal facility.
3.13.1.1	4	STARS-SSD-02198	Each two-way interface shall[4] be implemented in accordance with an ICD.	4.2.1	4.2.1.1 The STARS system must [STARS-381] support data exchange as indicated with the FAA systems identified below. Interface requirements are defined in separate specifications that are identified in Appendix 3, Reference Documents.
3.13.1.1	5	STARS-SSD-02199	Failure of a two-way interface shall[5] be detected automatically and initiate a reconfiguration to the backup path.	3.3.2	3.3.2.1 The system design must [STARS-321] preclude single point failures, excluding TCWs, MCWs, and TDWs.
3.13.1.1	6	STARS-SSD-02200	Two-way interfaces shall[6] employ security features in accordance with Section 3.2.1.1.18.2.3, External Systems.	3.1.14	3.1.14.1 System security must [STARS-201] be in accordance with the FAA and DoD standards identified in Appendix 3.
3.13.1.2.1	1	STARS-SSD-02201	STARS shall[1] accept and process surveillance message data in other formats as specified in IRDs to be supplied by the Government.	4.2.1	4.2.1.1 The STARS system must [STARS-381] support data exchange as indicated with the FAA systems identified below. Interface requirements are defined in separate specifications that are identified in Appendix 3, Reference Documents.

3.13.1.2.2	1	STARS-SSD-02202	STARS shall[1] interface to ITWS in accordance with two-way interface requirements.	3.1.1	3.1.1.1 The system must [STARS-001] accept aircraft position and weather data simultaneously from multiple surveillance systems within geographic areas defined by site adaptable (SA) parameters.
3.13.1.2.2	2	STARS-SSD-02203	The ITWS interface shall[2] support weather messages in accordance with an IRD to be supplied by the Government.	4.2.1	4.2.1.1 The STARS system must [STARS-381] support data exchange as indicated with the FAA systems identified below. Interface requirements are defined in separate specifications that are identified in Appendix 3, Reference Documents.
3.13.1.2.2	3	STARS-SSD-02204	STARS shall[3] perform ITWS support functional processing in accordance with functional specifications to be supplied by the Government.	3.1.1	3.1.1.1 The system must [STARS-001] accept aircraft position and weather data simultaneously from multiple surveillance systems within geographic areas defined by site adaptable (SA) parameters.
3.13.1.2.3	1	STARS-SSD-02205	STARS shall[1] interface to the ASR-9 Wind Shear Processor in accordance with an IRD to be provided by the Government.	4.2.1	4.2.1.1 The STARS system must [STARS-381] support data exchange as indicated with the FAA systems identified below. Interface requirements are defined in separate specifications that are identified in Appendix 3, Reference Documents.
3.13.1.2.3	2	STARS-SSD-02206	STARS shall[2] process and display ASR-9 Wind Shear Processor data in accordance with functional specifications to be provided by the Government.	3.1.1 4.2.1	3.1.1.3 The system must [STARS-003] process secondary inputs from the FAA and DoD air traffic surveillance systems. 3.1.1.4 The system must [STARS-004] display digital weather inputs from FAA and DoD air traffic surveillance systems, when available. 4.2.1.1 The STARS system must [STARS-381] support data exchange as indicated with the FAA systems identified below. Interface requirements are defined in separate specifications that are identified in Appendix 3, Reference Documents.
3.13.1.2.4	1	STARS-SSD-02207	STARS shall[1] interface to the TDWR in accordance with an IRD to be supplied by the Government.	4.2.1	4.2.1.1 The STARS system must [STARS-381] support data exchange as indicated with the FAA systems identified below. Interface requirements are defined in separate specifications that are identified in Appendix 3, Reference Documents.

3.13.1.2.4	2	STARS-SSD-02208	STARS shall[2] process and display TDWR data in accordance with functional specifications to be supplied by the Government.	3.1.1	3.1.1.3 The system must [STARS-003] process secondary inputs from the FAA and DoD air traffic surveillance systems. 3.1.1.4 The system must [STARS-004] display digital weather inputs from FAA and DoD air traffic surveillance systems, when available.
3.13.1.2.5	1	STARS-SSD-02209	STARS shall[1] interface to Data Link in accordance with two-way interface requirements.	4.2.1	4.2.1.1 The STARS system must [STARS-381] support data exchange as indicated with the FAA systems identified below. Interface requirements are defined in separate specifications that are identified in Appendix 3, Reference Documents.
3.13.1.2.5	2	STARS-SSD-02210	The Data Link interface shall[2] support messages in accordance with an IRD to be supplied by the Government.	4.2.1	4.2.1.1 The STARS system must [STARS-381] support data exchange as indicated with the FAA systems identified below. Interface requirements are defined in separate specifications that are identified in Appendix 3, Reference Documents.
3.13.1.2.5	3	STARS-SSD-02211	STARS shall[3] perform Data Link support functional processing in accordance with functional specifications to be supplied by the Government.	(Derived)	(Derived)
3.13.1.2.6	1	STARS-SSD-02212	CA and MCI algorithms shall[1] be enhanced to improve the probability of detection of aircraft conflicts.	3.1.3 3.2.3	3.1.3.1 The system must [STARS-031] detect unsafe proximity between tracked aircraft pairs regardless of sensor origin. 3.2.3.2 The system must [STARS-232] permit improvements to software elements without requiring a change to the system architecture.
3.13.1.2.6	2	STARS-SSD-02213	CA and MCI algorithms shall[2] be enhanced to reduce the probability of false alarms.	3.1.3	3.1.3.1 The system must [STARS-031] detect unsafe proximity between tracked aircraft pairs regardless of sensor origin.
3.13.1.2.6	3	STARS-SSD-02214	CA and MCI algorithms shall[3] be enhanced to employ the multi-sensor tracking features of the surveillance system enhancements.	3.1.3	3.1.3.1 The system must [STARS-031] detect unsafe proximity between tracked aircraft pairs regardless of sensor origin.
3.13.1.2.7	1	STARS-SSD-02215	STARS shall[1] interface to Traffic Management Enhancements in accordance with two-way interface requirements.	4.2.1	4.2.1.1 The STARS system must [STARS-381] support data exchange as indicated with the FAA systems identified below. Interface requirements are defined in separate specifications that are identified in Appendix 3, Reference Documents.

3.13.1.2.7	2	STARS-SSD-02216	The Traffic Management Enhancements interface shall[2] support messages in accordance with an IRD to be supplied by the Government.	4.2.1	4.2.1.1 The STARS system must [STARS-381] support data exchange as indicated with the FAA systems identified below. Interface requirements are defined in separate specifications that are identified in Appendix 3, Reference Documents.
3.13.1.2.7	3	STARS-SSD-02217	STARS shall[3] perform Traffic Management Enhancements support functional processing in accordance with functional specifications to be supplied by the Government.	3.2.3	3.2.3.2 The system must [STARS-232] permit improvements to software elements without requiring a change to the system architecture.
3.13.1.2.8	1	STARS-SSD-02218	FDIO Replacement Alpha Numeric Keyboard (RANK) functions shall[1] be performed at the TCW.	(Derived)	(Derived)
3.13.1.2.8	2	STARS-SSD-02219	FDIO Cathode Ray Tube (CRT) functions shall[2] be provided at the TCW.	(Derived)	(Derived)
3.13.1.2.8	3	STARS-SSD-02220	STARS equipment shall[3] perform the functions of the FDIO Replacement Flight Strip Printer (RFSP).	3.1.12	3.1.12.4 The system must [STARS-184] provide ATC operational information, including graphical plots, in electronic printable form.
3.13.1.2.8	4	STARS-SSD-02221	The interface to the Central Control Unit (CCU) of the FDIO system shall[4] meet the characteristics specified in the Flight Data Input/Output Program Software Interface Control Document (NAS-MD-581).	4.2.1	4.2.1.1 The STARS system must [STARS-381] support data exchange as indicated with the FAA systems identified below. Interface requirements are defined in separate specifications that are identified in Appendix 3, Reference Documents.
3.13.1.2.8	5	STARS-SSD-02222	FDP functions shall[5] be in accordance with a functional specification to be provided by the Government.	4.2.1	4.2.1.1 The STARS system must [STARS-381] support data exchange as indicated with the FAA systems identified below. Interface requirements are defined in separate specifications that are identified in Appendix 3, Reference Documents.
3.13.1.2.8	6	STARS-SSD-02223	Electronic display and manipulation of flight data shall[6] be in accordance with functional specifications to be provided by the Government.	3.1.9	3.1.9.3 The system must [STARS-113] provide for controller manipulation of tracked aircraft status. 3.1.9.4 The system must [STARS-114] provide the controller with control over flight plan information. 3.1.10.9 The system must [STARS-139] display aircraft status at each TCP. 3.1.10.10 The system must [STARS-140] display flight plan information at each TCP.
3.13.1.2.8	7	STARS-SSD-02224	The STARS/STARS interfacility interface shall[7] exchange data directly with up to seven other STARS facilities.	(Derived)	(Derived)

3.13.1.2.8	8	STARS-SSD-02225	The STARS/STARS interfacility interface shall[8] be in accordance with a vendor defined ICD.	4.2.1	4.2.1.1 The STARS system must [STARS-381] support data exchange as indicated with the FAA systems identified below. Interface requirements are defined in separate specifications that are identified in Appendix 3, Reference Documents.
3.13.1.2.8	9	STARS-SSD-02226	The STARS/STARS interfacility interface messages shall[9] be in accordance with the STARS to ARTCC for IFDT ICD (NAS-IC-21058100).	4.2.1	4.2.1.1 The STARS system must [STARS-381] support data exchange as indicated with the FAA systems identified below. Interface requirements are defined in separate specifications that are identified in Appendix 3, Reference Documents.
3.13.1.2.9	1	STARS-SSD-02227	TCP-defined airspace shall[1] be displayed on the TCWs.	3.1.10	3.1.10.2 The system must [STARS-132], based upon adaptation, display general information for the facility at each TCP.
3.13.1.2.10	1	STARS-SSD-02228	A data field shall[1] define aircraft equipment.	3.1.10	3.1.10.11 The system must [STARS-141] display aircraft information in the form of data blocks.
3.13.1.2.10	2	STARS-SSD-02229	A data field shall[2] define adaptable special equipment indicators to include TCAS, GPS, and Data Link at a minimum.	3.1.10	3.1.10.12 The system must [STARS-142] allow each site to define the content of data blocks in site adaptation.