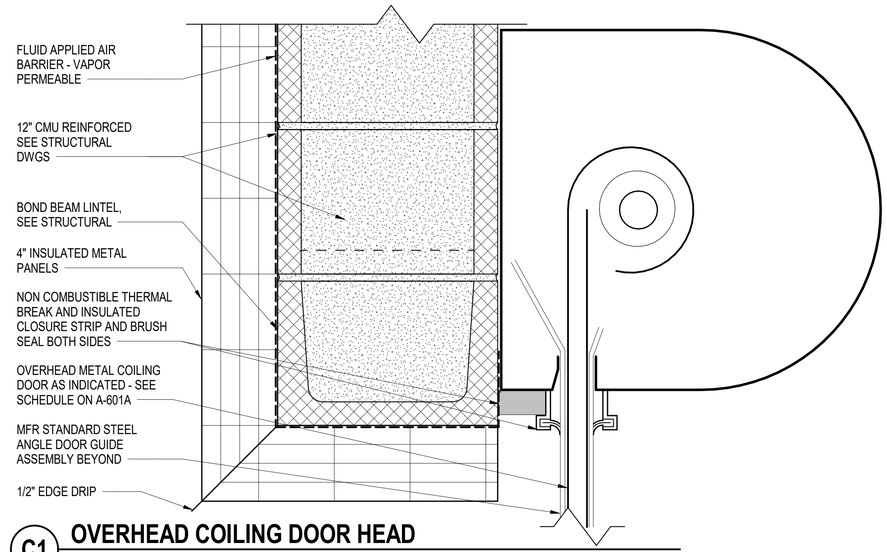

C1 OVERHEAD COILING DOOR HEAD

SCALE: 3" = 1'-0"

DOOR AND FRAME SCHEDULE

DOOR NO.	DOOR TYPE	DOOR SIZE WIDTH	DOOR SIZE HEIGHT	DOOR SIZE THICKNESS	DOOR MATERIAL	FRAME TYPE	FRAME MATERIAL	FRAME DETAILS HEAD	FRAME DETAILS JAMB	FRAME DETAILS SILL	FIRE RATING	HARDWARE SET NO.	REMARKS
COURSING AT SOUTH ELEVATION WALL													
101A	D1	3'-0"	7'-4"	1 3/4"	HM	F1	HM	B3	B2		- -	1	
101B	D1	3'-0"	7'-4"	1 3/4"	HM	F1	HM	B3	B2		- -	1	
101C	D2	10'-0"	10'-0"	1"	SS	- -	STL	C1	B1	A1	- -	2	
101D	D2	10'-0"	10'-0"	1"	SS	- -	STL	C1	B1	A1	- -	2	
101E	D2	10'-0"	10'-0"	1"	SS	- -	STL	C1	B1	A1	- -	2	

DOOR AND FRAME SCHEDULE REMARKS

HM = HOLLOW METAL

SS = STAINLESS STEEL

STL = STRUCTURAL STEEL

GENERAL DOOR NOTES:

A. HOLLOW METAL FRAMES INCLUDE HOLLOW METAL CASED OPENINGS, WINDOW, DOOR FRAMES.

B. FIELD VERIFY ALL OPENING DIMENSIONS FOR FRAMES PRIOR TO FABRICATION.

C. PROVIDE JAMB ANCHORS AT ALL DOORS. PROVIDE A MINIMUM OF ONE ANCHOR FOR EACH 2'-0" OF FRAME OPENING HEIGHT - MINIMUM (3) PER JAMB.

D. PROVIDE A CONTINUOUS BEAD OF SEALANT AT BOTH SIDES OF ALL FRAMES WHERE FRAME ABUTS THE PARTITION.

E. AT STANDARD MASONRY WALLS, FILL DOOR FRAME SOLID WITH MORTAR, UNLESS OTHERWISE NOTED.

F. REFERENCE STRUCTURAL DRAWINGS FOR CMU BOND BEAM LINTELS.

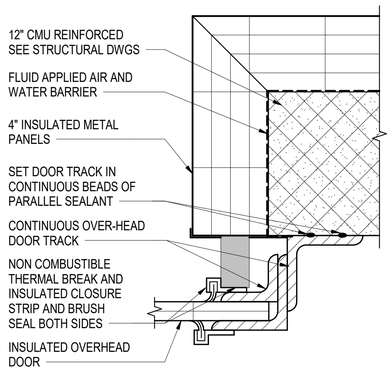

B1 OVERHEAD COILING DOOR JAMB

SCALE: 3" = 1'-0"

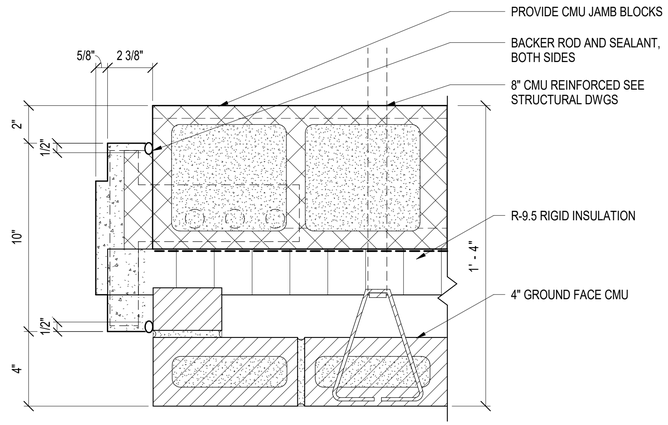

B2 MASONRY CAVITY WALL JAMB DETAIL

SCALE: 3" = 1'-0"

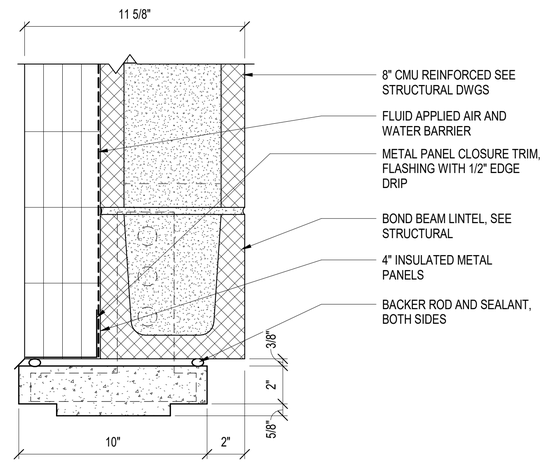

B3 METAL PANEL AND MASONRY HM HEAD

SCALE: 3" = 1'-0"

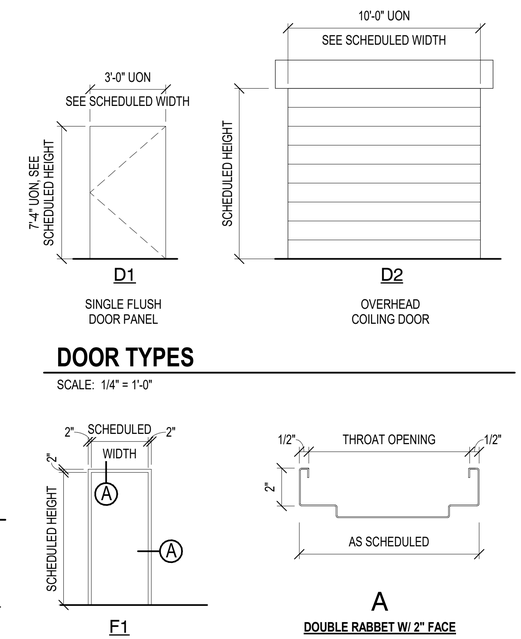

DOOR TYPES

SCALE: 1/4" = 1'-0"

FRAME TYPES

SCALE: 1/4" = 1'-0"

HOLLOW METAL FRAME PROFILE

SCALE: 3" = 1'-0"

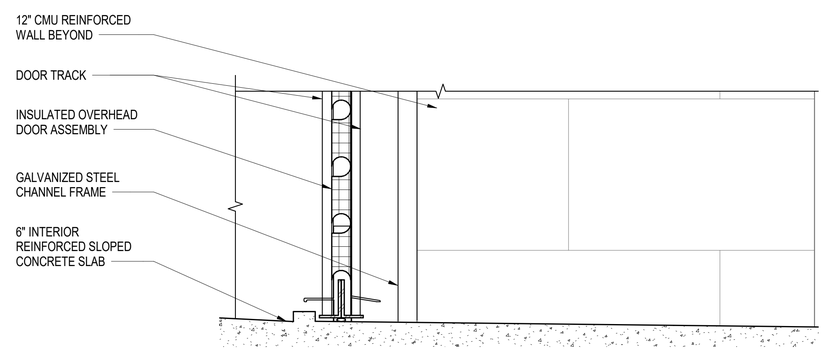

A1 OVERHEAD COILING DOOR SILL

SCALE: 3" = 1'-0"

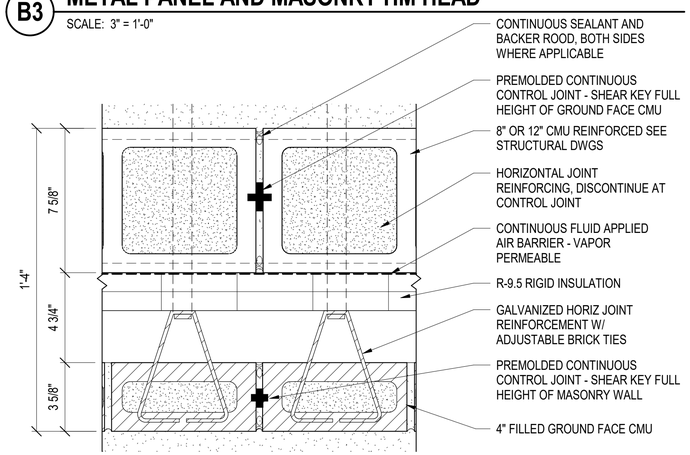

A3 MASONRY CONTROL JOINT (CJ) DETAIL

SCALE: 3" = 1'-0"

GRAPHIC SCALE(S)

3" = 1' - 0": 0, 3", 6", 1'

1/4" = 1' - 0": 0, 1', 5', 10', 15'

SYM	DESCRIPTION	DATE	APPR
A	DOOR AND FRAME SCHEDULE UPDATE	6/12/2026	

NAVFAC

SEAL

A/E INFO

APPROVED

FOR COMMANDER NAVFAC 6/16/2026

ACTIVITY: Approved by LCDR VINCE DEL GRECO, ROICC with PWD YORKTOWN, via Email.

SATISFACTORY TO DATE 03/26/2026

DES GJR | DRW GJR | CHK JEL

PM/DM MME/WJW

BRANCH MANAGER DJD

CHIEF ENG/ARCH JWJ

FIRE PROTECTION HPN

DEPARTMENT OF THE NAVY
NAVAL FACILITIES ENGINEERING SYSTEMS COMMAND
MIDLANT DC CORE

NAVAL FACILITIES ENGINEERING SYSTEMS COMMAND - MID-ATLANTIC
NAVAL STATION - NORFOLK, VA

NAVAL WEAPONS STATION YORKTOWN, VIRGINIA

P171 WEAPON MAGAZINES
FORKLIFT CHARGING STATION

DOOR AND FRAME SCHEDULE TYPES AND DETAILS

SCALE: AS NOTED

EPROJECT NO.: 1737010

CONSTR. CONTR. NO.

NAVFAC DRAWING NO. 12942170

SHEET 484 OF 499

A-601B

DRAWFORM REVISION: 25 AUGUST 2020

6/11/2026 8:54:34 AM A-601B
C:\Revit Local Files\P171-1737010-A-R21-FORKLIFT_gareth.rattb.rvt