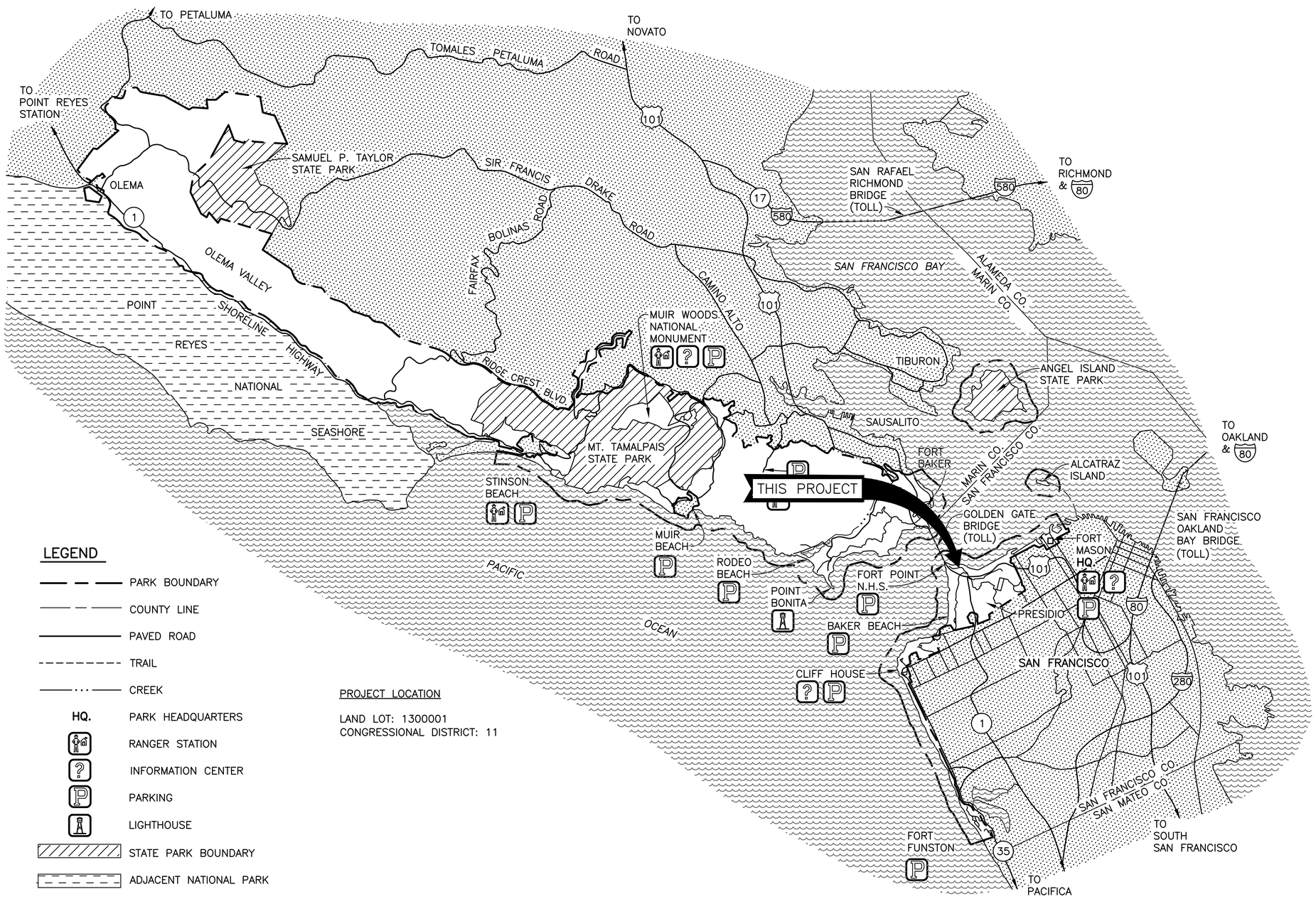

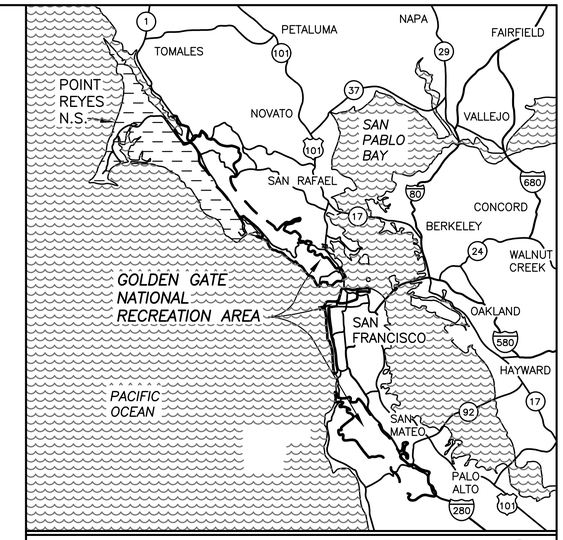

LEGEND

- PARK BOUNDARY
- COUNTY LINE
- PAVED ROAD
- TRAIL
- CREEK
- HQ. PARK HEADQUARTERS
- RANGER STATION
- INFORMATION CENTER
- PARKING
- LIGHTHOUSE
- STATE PARK BOUNDARY
- ADJACENT NATIONAL PARK

PROJECT LOCATION

LAND LOT: 1300001
CONGRESSIONAL DISTRICT: 11

GOLDEN GATE NATIONAL RECREATION AREA

SCALE OF MILES
1 0 1 2 3
1 0 1 2 3 4
SCALE OF KILOMETERS

SHEET	SUB SHEET	SHEET TITLE
1	G0	COVER SHEET
2	G1	SITE OVERVIEW
3	G2	EXISTING CONDITIONS I
4	G3	EXISTING CONDITIONS II
5	G4	EXISTING CONDITIONS III
6	G5	STAGING PLAN
7	G6	TESC & DEMOLITION PLAN I
8	G7	TESC & DEMOLITION PLAN II
9	G8	TESC & DEMOLITION PLAN III
10	C1	SITE PLAN I
11	C2	SITE PLAN II
12	C3	SITE PLAN III
13	C4	ALIGNMENT & PROFILE I
14	C5	ALIGNMENT & PROFILE II
15	C6	UILITY PLAN
16	C7	GRADING & DRAINAGE PLAN I
17	C8	GRADING & DRAINAGE PLAN II
18	C9	GRADING & DRAINAGE PLAN III
19	C10	GRADING POINTS I
20	C11	GRADING POINTS II
21	SX1	TYPICAL SECTIONS
22	CH1	STRIPING PLAN I
23	CH2	STRIPING PLAN II
24	CH3	STRIPING PLAN III
25	D1	DETAILS I
26	D2	DETAILS II
27	D3	DETAILS III
28	D4	DETAILS IIII

Know what's below. Call 811 before you dig.

FINAL CONSTRUCTION DOCUMENTS

UNITED STATES
DEPARTMENT OF THE INTERIOR

NATIONAL PARK SERVICE
DENVER SERVICE CENTER

TITLE OF DRAWING
IMPROVEMENTS TO WEST BLUFF TRAIL/ARRIVAL AREA
LOCATION WITHIN PARK
PRESIDIO OF SAN FRANCISCO
NAME OF PARK
GOLDEN GATE NATIONAL RECREATION AREA

REGION	COUNTY	STATE
PACIFIC	SAN FRANCISCO	CALIFORNIA

DRAWING NO. 641 187495

PKG. NO. GOGA 244 458

SHEET 1 OF 28

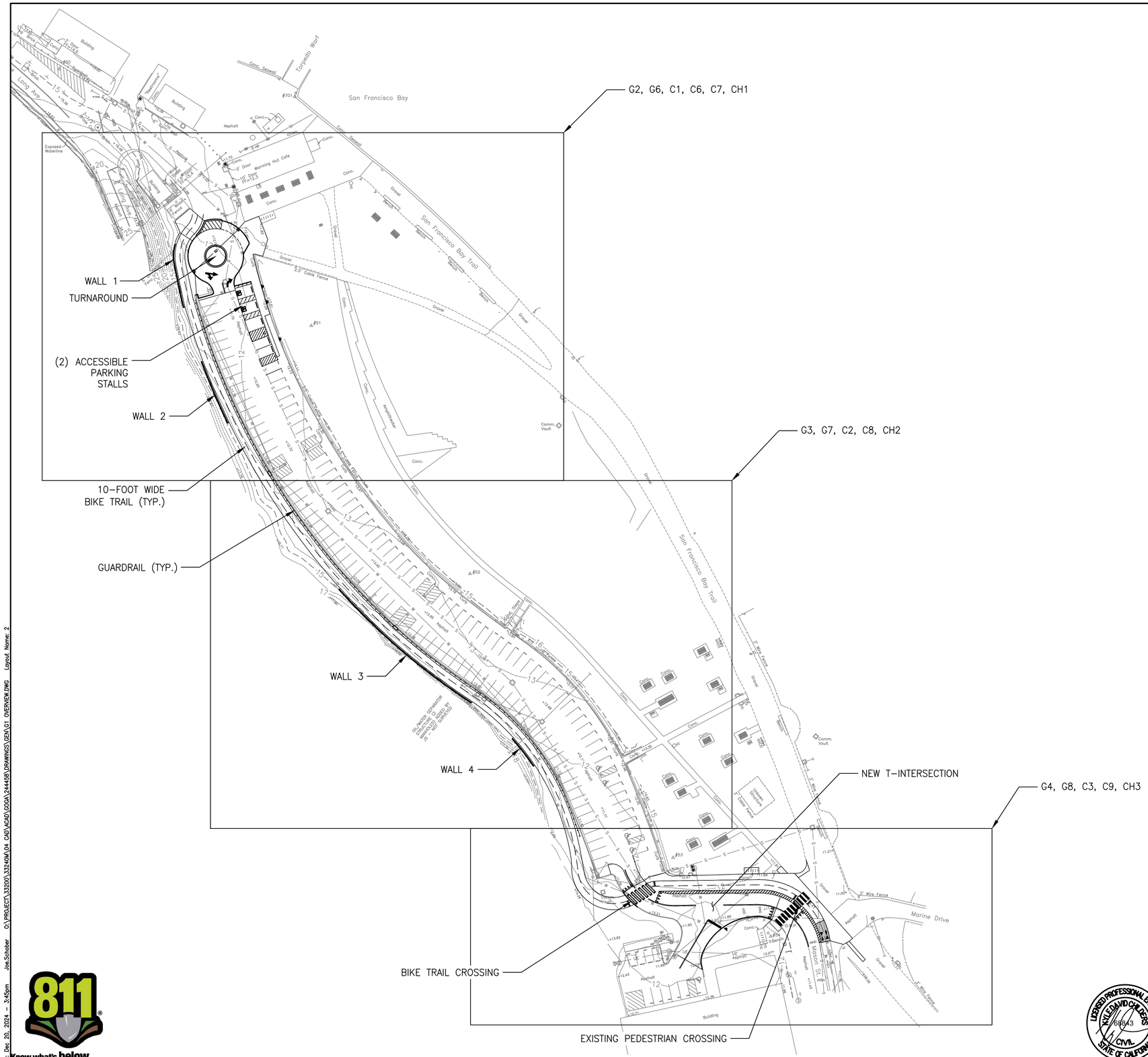
G2, G6, C1, C6, C7, CH1
G3, G7, C2, C8, CH2
G4, G8, C3, C9, CH3
WALL 1
TURNAROUND
(2) ACCESSIBLE PARKING STALLS
WALL 2
10-FOOT WIDE BIKE TRAIL (TYP.)
GUARDRAIL (TYP.)
WALL 3
WALL 4
NEW T-INTERSECTION
BIKE TRAIL CROSSING
EXISTING PEDESTRIAN CROSSING
San Francisco Bay
San Francisco Bay Trail
Marine Drive
Torpedo Wharf
Long Ave.
Building
Warming Hut Cafe
Comm. Vault
Aboveground Tank
Asphalt
Conc.
Gravel
Wire Fence
Chain Link Fence
Exposed Waterline
Midway St.
Bike Rack
Bench
Picnic Table
Trash Receptacle
Lighting
Utility Pole
Fire Hydrant
Sign
Tree
Curb Inlet
Area Drain
Cleanout
Manhole
Valve
Meter
Gate
Bollard
Guardrail
Crosswalk
Striping
Pavement Stripe
Parking Stripe
Curb
Edge of Pavement
Edge of Concrete
Flow Line
Face of Curb
Grade Break
Grade Change
Top Back of Curb
Top of Concrete
Top of Wall
Point of Curvature
Point of Compound Curve
Point of Reverse Curve
Point of Vertical Intersection
Point of Tangency
Point of Beginning
Point of Ending
Point of Intersection
Point of Control
Point of Connection
Point of Contact
Point of Interest
Point of Reference
Point of Origin
Point of Terminal
Point of Tangent
Point of Curve
Point of Vertical Curve
Point of Vertical Intersection
Point of Vertical Tangent

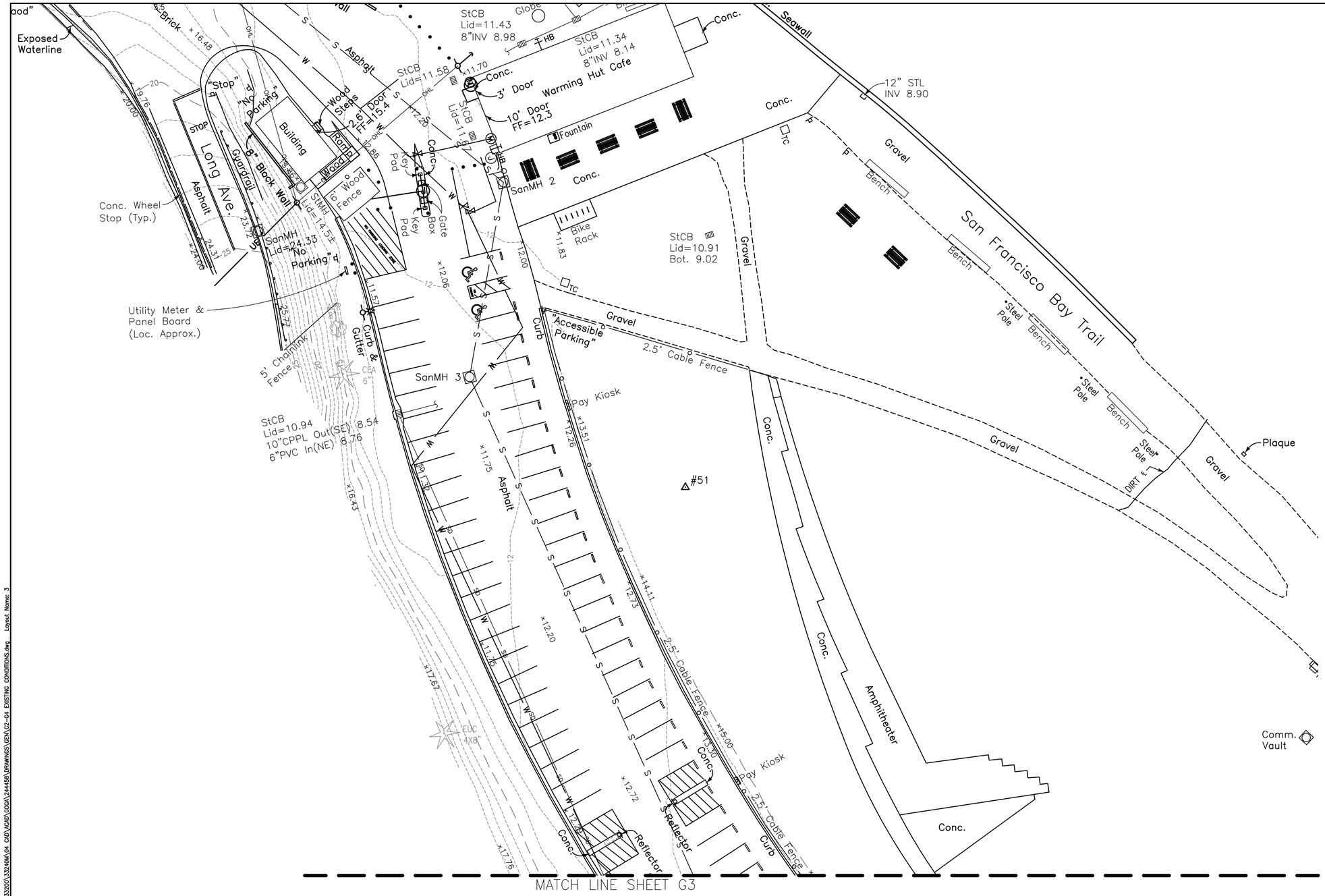

- SURVEY CONTROL POINT
- FOUND EXISTING MONUMENT
- SEWER MANHOLE
- SEWER CLEAN OUT
- STORM MANHOLE
- CATCH BASIN
- LINE CONTINUES
- FIRE HYDRANT
- WATER VALVE
- WATER METER
- HOSE BIB
- IRRIGATION CONTROL VALVE
- UTILITY POLE
- LIGHT POLE
- GUY ANCHOR
- ELECTRIC METER
- ELECTRIC JUNCTION BOX
- COMMUNICATION MANHOLE
- COMMUNICATION JUNCTION BOX
- SIGN
- BOLLARD
- TRASH CAN
- COOKING GRILL
- PICNIC TABLE
- HANDICAPPED PARKING
- BIKE LANE
- PEDESTRIAN LANE
- DECIDUOUS TREE
- EVERGREEN TREE
- × 1976.50 SPOT ELEVATION
- S — S — UNDERGROUND SEWER LINE
- SD — UNDERGROUND STORM LINE
- W — UNDERGROUND WATER LINE
- UE — UNDERGROUND ELECTRIC LINE
- o — FENCE LINE
- OHL — OVERHEAD UTILITY LINE
- 50 — MAJOR (5') CONTOUR LINE
- 51 — MINOR (1') CONTOUR LINE

Conc. = Concrete
D.W.P. = Detectable Warning Pad
CPPL = Corregated Plastic Pipe Lined
FF = Finish Floor
DEC = Deciduous
TOY = Toyon
CEA = Ceanothus
APP = Apple
EUC = Eucalyptus
Typ = Typical
Unk = Unknown

SURVEY CONTROL POINTS

#51
Set Plastic Hub.
N=2,122,619.760
E=5,992,432.199
EL=26.24

SANITARY MANHOLES

SanMH 2
Lid=11.83
8"PVC Out(SW) 8.98
8"PVC In(NW) 9.08

SanMH 3
Lid=11.77
8"PVC Out(NE) 8.37
8"PVC In(SE) 8.67

20' 0' 20' 40'
SCALE OF FEET

Know what's below. Call 811 before you dig.

HORIZONTAL DATUM: CALIFORNIA STATE PLAN, ZONE 3, NAD83(2011) EPOCH2010.00

VERTICAL DATUM: NAVD88

DESIGNED: DP, JS	SUB SHEET NO.	EXISTING CONDITIONS I	DRAWING NO. 641 187495
CADD JS, AK	G2	GOLDEN GATE NATIONAL RECREATION AREA	PMIS/PKG NO. GOGA 244458
TECH. REVIEW: KK, KB, KC		PRESIDIO OF SAN FRANCISCO | WEST BLUFF	SHEET 3 OF 28
DATE: DEC 2024			

Plotted: Dec 20, 2024 - 3:45pm Joe.Schober O:\PROJECT\33200\33240W\04 CAD\ACAD\GOGA\244458\DRAWINGS\GEN\G2-G4 EXISTING CONDITIONS.dwg Layout Name: 3

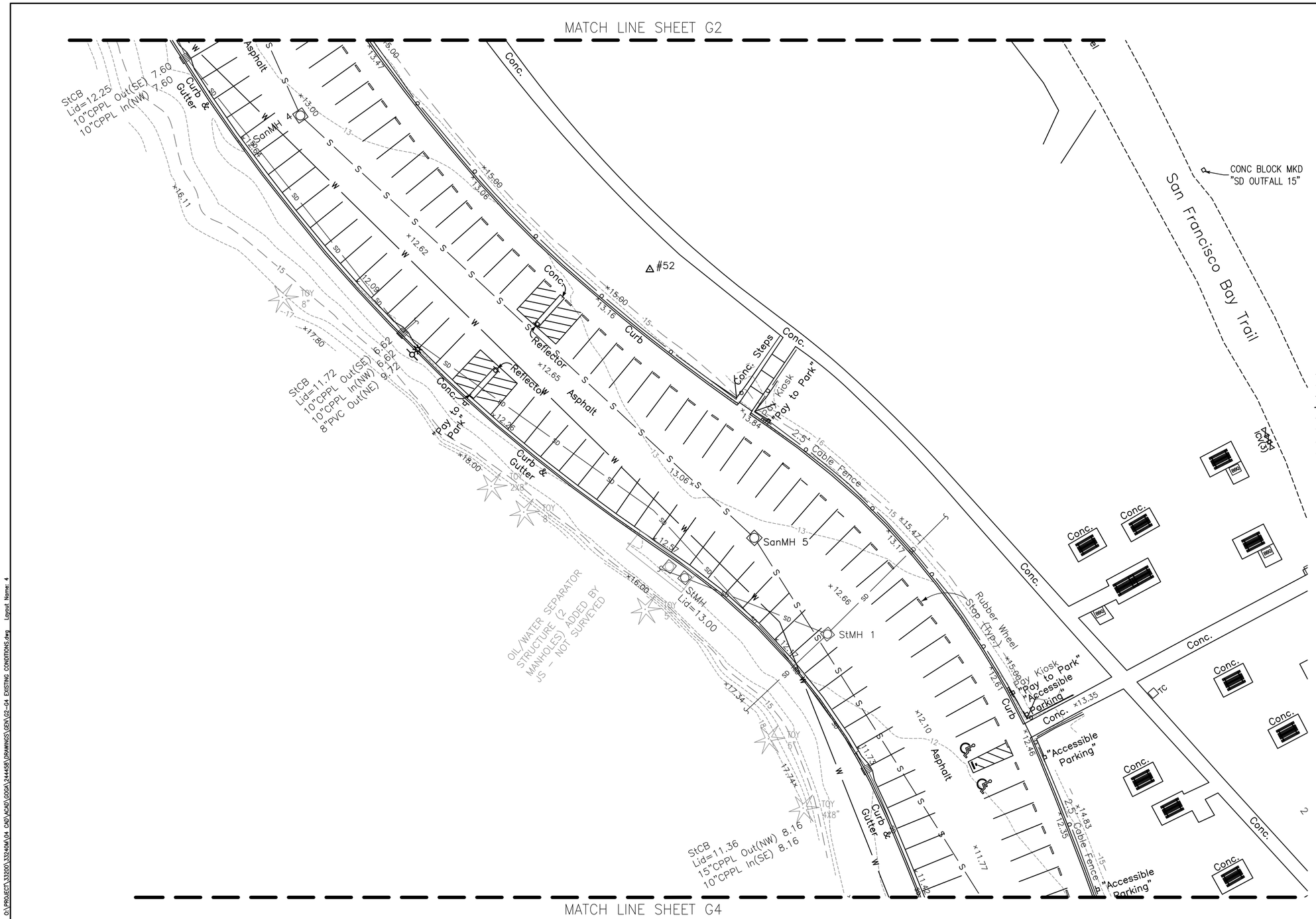

- SURVEY CONTROL POINT
- FOUND EXISTING MONUMENT
- SEWER MANHOLE
- SEWER CLEAN OUT
- STORM MANHOLE
- CATCH BASIN
- LINE CONTINUES
- FIRE HYDRANT
- WATER VALVE
- WATER METER
- HOSE BIB
- IRRIGATION CONTROL VALVE
- UTILITY POLE
- LIGHT POLE
- GUY ANCHOR
- ELECTRIC METER
- ELECTRIC JUNCTION BOX
- COMMUNICATION MANHOLE
- COMMUNICATION JUNCTION BOX
- SIGN
- BOLLARD
- TRASH CAN
- COOKING GRILL
- PICNIC TABLE
- HANDICAPPED PARKING
- BIKE LANE
- PEDESTRIAN LANE
- DECIDUOUS TREE
- EVERGREEN TREE
- × 1976.50 SPOT ELEVATION
- UNDERGROUND SEWER LINE
- UNDERGROUND STORM LINE
- UNDERGROUND WATER LINE
- UNDERGROUND ELECTRIC LINE
- FENCE LINE
- OVERHEAD UTILITY LINE
- MAJOR (5') CONTOUR LINE
- MINOR (1') CONTOUR LINE

Conc. = Concrete
D.W.P. = Detectable Warning Pad
CPPL = Corregated Plastic Pipe Lined
FF = Finish Floor
DEC = Deciduous
TOY = Toyon
CEA = Ceanothus
APP = Apple
EUC = Eucalyptus
Typ = Typical
Unk = Unknown

SURVEY CONTROL POINTS

#52
Set Plastic Hub.
N=2,122,376.510
E=5,992,587.929
EL=21.94

SANITARY MANHOLE

SanMH 4
Lid=12.89
8"PVC Out(SE) 4.49
8"PVC In(NW) 4.59

SanMH 5
Lid=12.81
8"PVC Out(SE) 5.71
8"PVC In(NW) 5.81

STORM MANHOLE

StMH 1
Lid=12.34
48"Conc. Out(NE) 3.64
48"Conc. In(SW) 3.64
12"PVC In(NW) 4.84
15"PVC Runs Thru Top 6.54

20' 0' 20' 40'
SCALE OF FEET

Know what's below. Call 811 before you dig.

HORIZONTAL DATUM: CALIFORNIA STATE PLAN, ZONE 3, NAD83(2011) EPOCH2010.00

VERTICAL DATUM: NAVD88

DESIGNED: DP, JS	SUB SHEET NO.	EXISTING CONDITIONS II	DRAWING NO. 641 187495
DADP JS, AK	G3	GOLDEN GATE NATIONAL RECREATION AREA PRESIDIO OF SAN FRANCISCO | WEST BLUFF	PMIS/PKG NO. GOGA 244458
TECH. REVIEW: KK, KB, KC			SHEET 4 OF 28
DATE: DEC 2024			

Plotted: Dec 20, 2024 – 3:45pm Joe.Schober G:\PROJECT\3200\32404\04 CAD\ACAD\GOGA\244458\DRAWINGS\GEN\G2-G4 EXISTING CONDITIONS.dwg Layout Name: 4

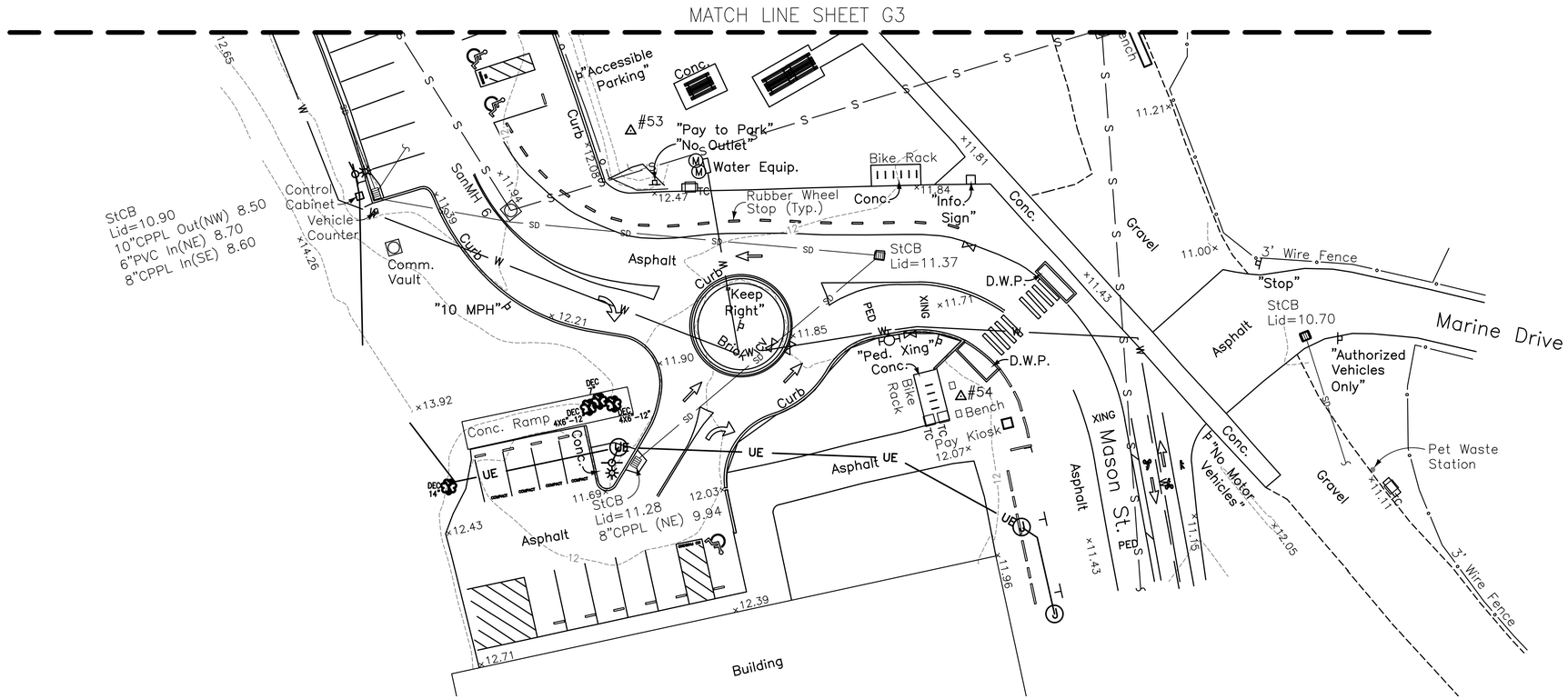

SURVEY CONTROL POINT
FOUND EXISTING MONUMENT
SEWER MANHOLE
SEWER CLEAN OUT
STORM MANHOLE
CATCH BASIN
LINE CONTINUES
FIRE HYDRANT
WATER VALVE
WATER METER
HOSE BIB
IRRIGATION CONTROL VALVE
UTILITY POLE
LIGHT POLE
GUY ANCHOR
ELECTRIC METER
ELECTRIC JUNCTION BOX
COMMUNICATION MANHOLE
COMMUNICATION JUNCTION BOX
SIGN
BOLLARD
TRASH CAN
COOKING GRILL
PICNIC TABLE
HANDICAPPED PARKING
BIKE LANE
PEDESTRIAN LANE
DECIDUOUS TREE
EVERGREEN TREE
× 1976.50 SPOT ELEVATION
S — UNDERGROUND SEWER LINE
SD — UNDERGROUND STORM LINE
W — UNDERGROUND WATER LINE
UE — UNDERGROUND ELECTRIC LINE
FENCE LINE
OHL — OVERHEAD UTILITY LINE
50 — MAJOR (5') CONTOUR LINE
51 — MINOR (1') CONTOUR LINE

Conc. = Concrete
D.W.P. = Detectable Warning Pad
CPPL = Corregated Plastic Pipe Lined
FF = Finish Floor
DEC = Deciduous
TOY = Toyon
CEA = Ceanothus
APP = Apple
EUC = Eucalyptus
Typ = Typical
Unk = Unknown

SURVEY CONTROL POINTS

#53
Set Plastic Hub.
N=2,122,098.043
E=5,992,787.255
EL=15.96

#54
Set 1" Copper disk
stamped "OTAK CONTROL".
N=2,122,020.919
E=5,992,883.080
EL=12.07

SANITARY MANHOLE

SanMH 6
Lid=12.06
8"PVC Out(NE) 5.46
8"PVC In(NW) 5.56

20' 0' 20' 40'
SCALE OF FEET

Know what's below. Call 811 before you dig.

HORIZONTAL DATUM: CALIFORNIA STATE PLAN, ZONE 3, NAD83(2011) EPOCH2010.00

VERTICAL DATUM: NAVD88

DESIGNED: DP, JS	SUB SHEET NO.	EXISTING CONDITIONS III	DRAWING NO. 641 187495
CADD: JS, AK	G4	GOLDEN GATE NATIONAL RECREATION AREA	PMIS/PKG NO. GOGA 244458
TECH. REVIEW: KK, KB, KC		PRESIDIO OF SAN FRANCISCO | WEST BLUFF	SHEET 5 OF 28
DATE: DEC 2024			

Plotted: Dec 20, 2024 - 3:46pm Joe.Schober O:\PROJECT\33200\33240W\04 CAD\ACAD\GOGA\244458\DRAWINGS\GEN\G2-G4 EXISTING CONDITIONS.dwg Layout Name: 5

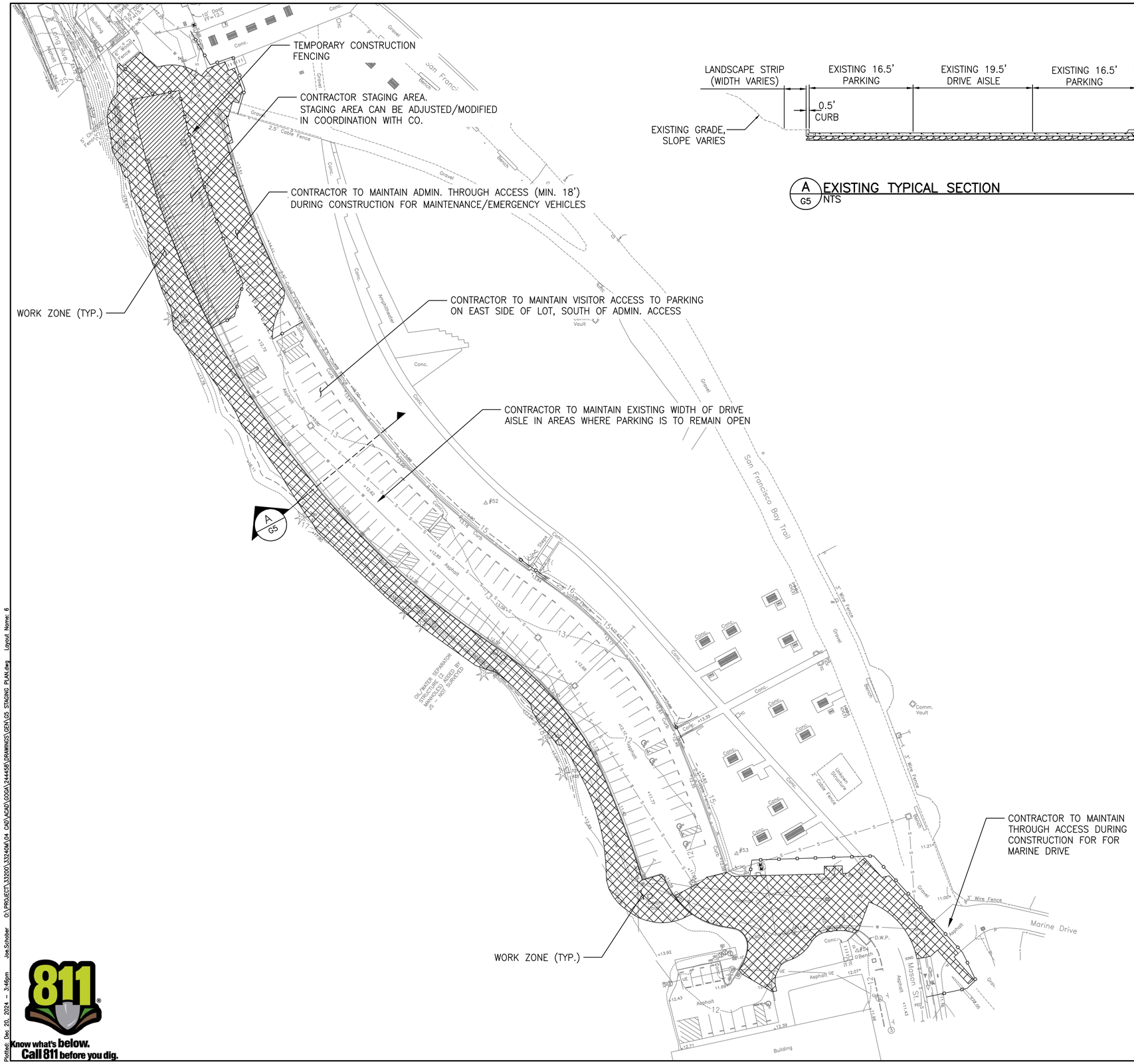

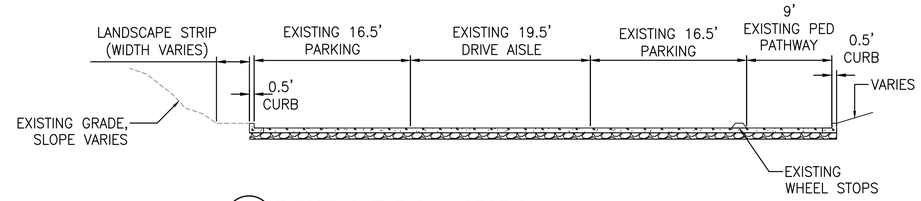

A G5 EXISTING TYPICAL SECTION
NTS

LEGEND

STAGING AREA

WORK AREA

CONSTRUCTION FENCE

NOTES:

1. FINAL LOCATION OF THE STAGING AREAS SHALL BE DETERMINED IN THE FIELD WITH THE CO.
2. SITE SECURITY IS THE RESPONSIBILITY OF THE CONTRACTOR. FENCING LOCATIONS AND EXTENTS ARE APPROXIMATE. REFER TO SPECS FOR DETAILED INFORMATION REGARDING SITE SECURITY.
3. PROVIDE TEMPORARY FREE-STANDING 8' HIGH BY 12' LONG CHAIN LINK FENCING PANELS AT THE PERIMETER OF THE CONSTRUCTION PROJECT AS DETERMINED WITH THE CO.
4. PLACE PORTABLE TOILETS WITHIN THE STAGING FENCE ENCLOSURE.
5. SERVICING OF THE PORTABLE TOILETS SHALL BE PROVIDED BY THE GENERAL CONTRACTOR/PORTABLE TOILET PROVIDER.
6. MAINTAIN ACCESS THROUGH SITE DURING CONSTRUCTION FOR EMERGENCY AND MAINTENANCE VEHICLE ACCESS.
7. STAGING AREAS SHALL BE RESTORED TO PRE-CONSTRUCTION CONDITIONS FOLLOWING COMPLETION OF THE PROJECT.
8. SITE ELEMENTS OUTSIDE THE AREAS OF WORK SHALL BE PROTECTED DURING CONSTRUCTION. SEE SHEETS G6-G8 FOR REMOVALS.

40' 0' 40' 80'
SCALE OF FEET

Know what's below. Call 811 before you dig.

DESIGNED: DP, JS	SUB SHEET NO.	STAGING PLAN	DRAWING NO. 641 / 187495
CADD JS, AK	G5		PMIS/PKG NO. GOGA 244458
TECH. REVIEW: KK, KB, KC		GOLDEN GATE NATIONAL RECREATION AREA PRESIDIO OF SAN FRANCISCO | WEST BLUFF	SHEET 6 OF 28
DATE: DEC 2024			

Plotted: Dec 20, 2024 - 3:46pm Joe.Schober O:\PROJECT\33200\33240M\04 CAD\ACAD\GOGA\244458\DRAWINGS\GEN\G5 STAGING PLAN.dwg Layout Name: 6

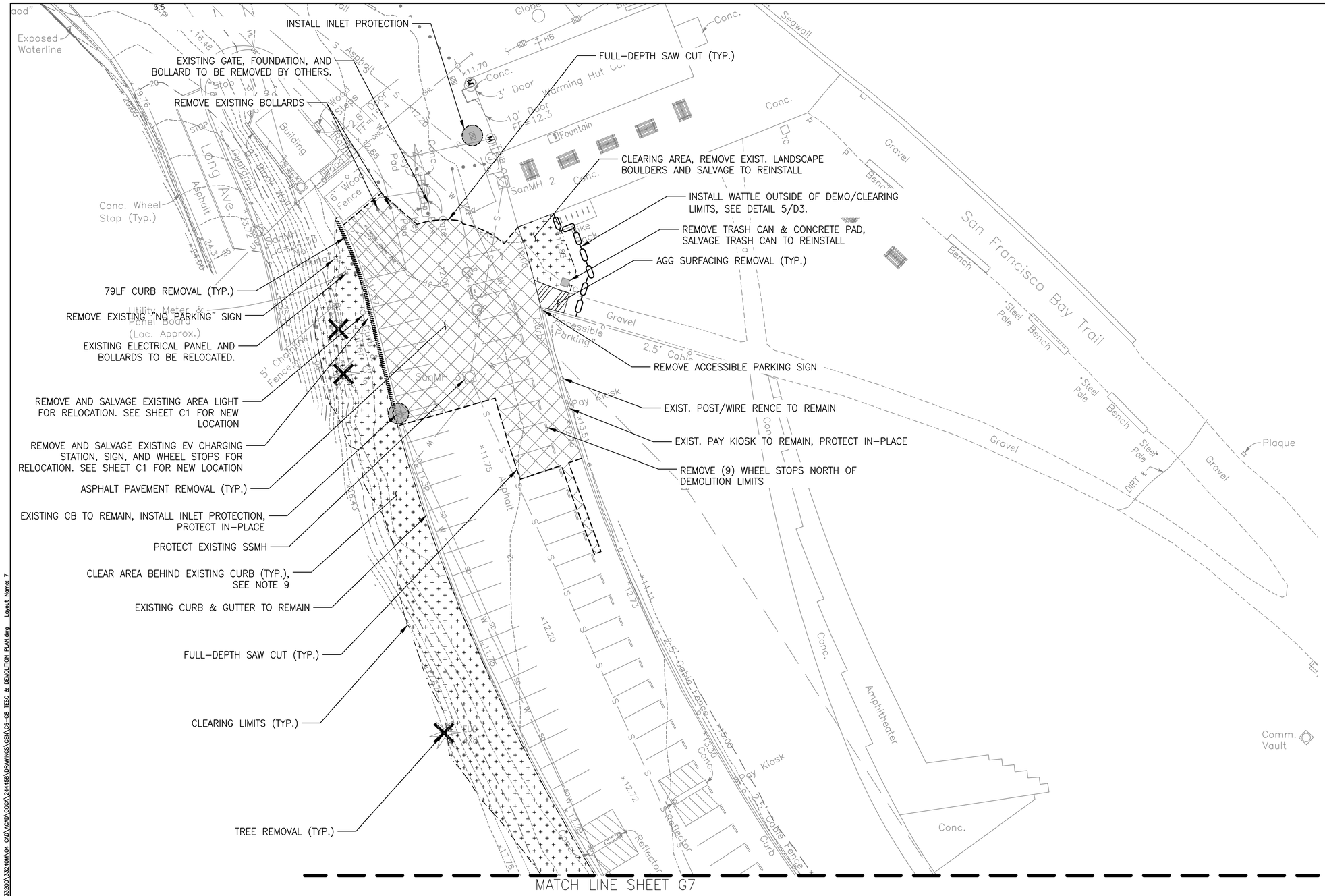

LEGEND

- CLEARING LIMITS
- ASPHALT PAVEMENT REMOVAL
- CONCRETE PAVEMENT REMOVAL
- AGG SURFACING REMOVAL
- CONCRETE CURB REMOVAL
- FULL DEPTH SAW CUT
- INLET PROTECTION
- TREE PROTECTION
- TREE REMOVAL
- WATTLE

NOTES:

1. SEE SHEETS C10–C11 FOR LAYOUT CONTROL POINTS THAT DEFINE LIMITS OF DEMOLITION.
2. CONTRACTOR IS RESPONSIBLE FOR VERIFYING LOCATION OF UNDERGROUND UTILITIES.
3. SALVAGED MATERIALS TO BE SAFELY STORED ON–SITE FOR FUTURE USE OR AS DIRECTED BY FIELD REPRESENTATIVE.
4. CONTRACTOR SHALL BE RESPONSIBLE FOR MAINTAINING EXISTING DRAINAGE THROUGH THE SITE DURING CONSTRUCTION.
5. PROTECT EXISTING UTILITIES, SIGNAGE, AND FEATURES IN PLACE NOT CALLED OUT FOR REMOVAL OR RELOCATION.
6. TESC MEASURES SHOWN ARE APPROXIMATE AND SHALL BE FIELD LOCATED AND APPROVED TO ACCOMMODATE SITE CONDITIONS AND WORK SCHEDULE.
7. CONTRACTOR SHALL PROVIDE EROSION CONTROL MAINTENANCE DURING CONSTRUCTION AND SHALL REMOVE EROSION CONTROL MEASURES AFTER CONSTRUCTION.
8. SOIL MANAGEMENT PLAN SHALL BE SUBMITTED AND APPROVED PER SPECIFICATIONS PRIOR TO ANY GROUND DISTURBING ACTIVITIES.
9. CLEAR VEGETATION AND SALVAGE TOPSOIL FOR REUSE IN SOIL PREP AREAS. STRIP TOPSOIL UP TO A DEPTH OF 6 INCHES. DEPTH OF TOPSOIL MAY VARY DUE TO EXISTING UTILITIES AND/OR PREVIOUS DISTURBANCE.

20' 0' 20' 40'
SCALE OF FEET

811 Know what's below. Call 811 before you dig.

LICENSED PROFESSIONAL ENGINEER KYLLE DAVID CHILDERS 68843 CIVIL STATE OF CALIFORNIA
12/20/24

DESIGNED: DP, JS	SUB SHEET NO.	TESC & DEMOLITION PLAN I
CADD JS, AK	G6	GOLDEN GATE NATIONAL RECREATION AREA
TECH. REVIEW: KK, KB, KC		PRESIDIO OF SAN FRANCISCO | WEST BLUFF
DATE: DEC 2024		

DRAWING NO. 641 187495
PMIS/PKG NO. GOGA 244458
SHEET 7 OF 28

Plotted: Dec 20, 2024 – 3:47pm Joe.Schober O:\PROJECT\33200\33240W\04 CAD\ACAD\GOGA\244458\DRAWINGS\GEN\G6-G8 TESC & DEMOLITION PLAN.dwg Layout Name: 7

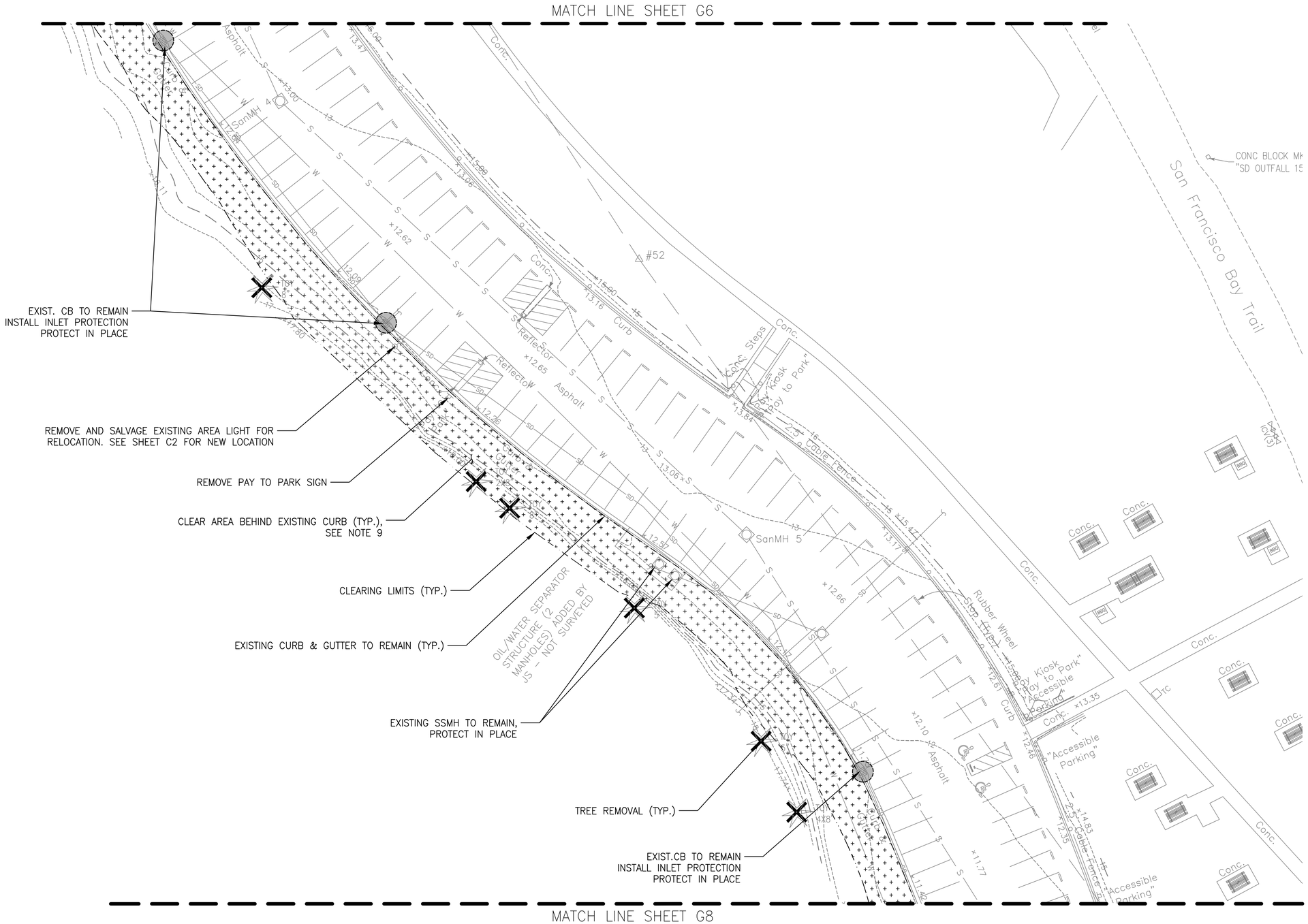

LEGEND

- CLEARING LIMITS
- ASPHALT PAVEMENT REMOVAL
- CONCRETE PAVEMENT REMOVAL
- AGG SURFACING REMOVAL
- CONCRETE CURB REMOVAL
- FULL DEPTH SAW CUT
- INLET PROTECTION
- TREE PROTECTION
- TREE REMOVAL
- WATTLE

NOTES:

1. SEE SHEETS C10–C11 FOR LAYOUT CONTROL POINTS THAT DEFINE LIMITS OF DEMOLITION.
2. CONTRACTOR IS RESPONSIBLE FOR VERIFYING LOCATION OF UNDERGROUND UTILITIES.
3. SALVAGED MATERIALS TO BE SAFELY STORED ON–SITE FOR FUTURE USE OR AS DIRECTED BY FIELD REPRESENTATIVE.
4. CONTRACTOR SHALL BE RESPONSIBLE FOR MAINTAINING EXISTING DRAINAGE THROUGH THE SITE DURING CONSTRUCTION.
5. PROTECT EXISTING UTILITIES, SIGNAGE, AND FEATURES IN PLACE NOT CALLED OUT FOR REMOVAL OR RELOCATION.
6. TESC MEASURES SHOWN ARE APPROXIMATE AND SHALL BE FIELD LOCATED AND APPROVED TO ACCOMMODATE SITE CONDITIONS AND WORK SCHEDULE.
7. CONTRACTOR SHALL PROVIDE EROSION CONTROL MAINTENANCE DURING CONSTRUCTION AND SHALL REMOVE EROSION CONTROL MEASURES AFTER CONSTRUCTION.
8. SOIL MANAGEMENT PLAN SHALL BE SUBMITTED AND APPROVED PER SPECIFICATIONS PRIOR TO ANY GROUND DISTURBING ACTIVITIES.
9. CLEAR VEGETATION AND SALVAGE TOPSOIL FOR REUSE IN SOIL PREP AREAS. STRIP TOPSOIL UP TO A DEPTH OF 6 INCHES. DEPTH OF TOPSOIL MAY VARY DUE TO EXISTING UTILITIES AND/OR PREVIOUS DISTURBANCE.

20' 0' 20' 40'
SCALE OF FEET

Know what's below. Call 811 before you dig.

LICENSED PROFESSIONAL ENGINEER KYLE DAVID CHILDERS 58843 CIVIL STATE OF CALIFORNIA
12/20/24

DESIGNED: DP, JS	SUB SHEET NO. G7	TESC & DEMOLITION PLAN II
CADD: JS, AK		GOLDEN GATE NATIONAL RECREATION AREA
TECH. REVIEW: KK, KB, KC		PRESIDIO OF SAN FRANCISCO | WEST BLUFF
DATE: DEC 2024		

DRAWING NO. 641 187495
PMIS/PKG NO. GOGA 244458
SHEET 8 OF 28

Plotted: Dec. 20, 2024 – 3:47pm Joe.Schober G:\PROJECT\33200\33240\A\04 CAD\ACAD\GOGA\244458\DRAWINGS\GEA\G6-G8 TESC & DEMOLITION PLAN.dwg Layout Name: 8

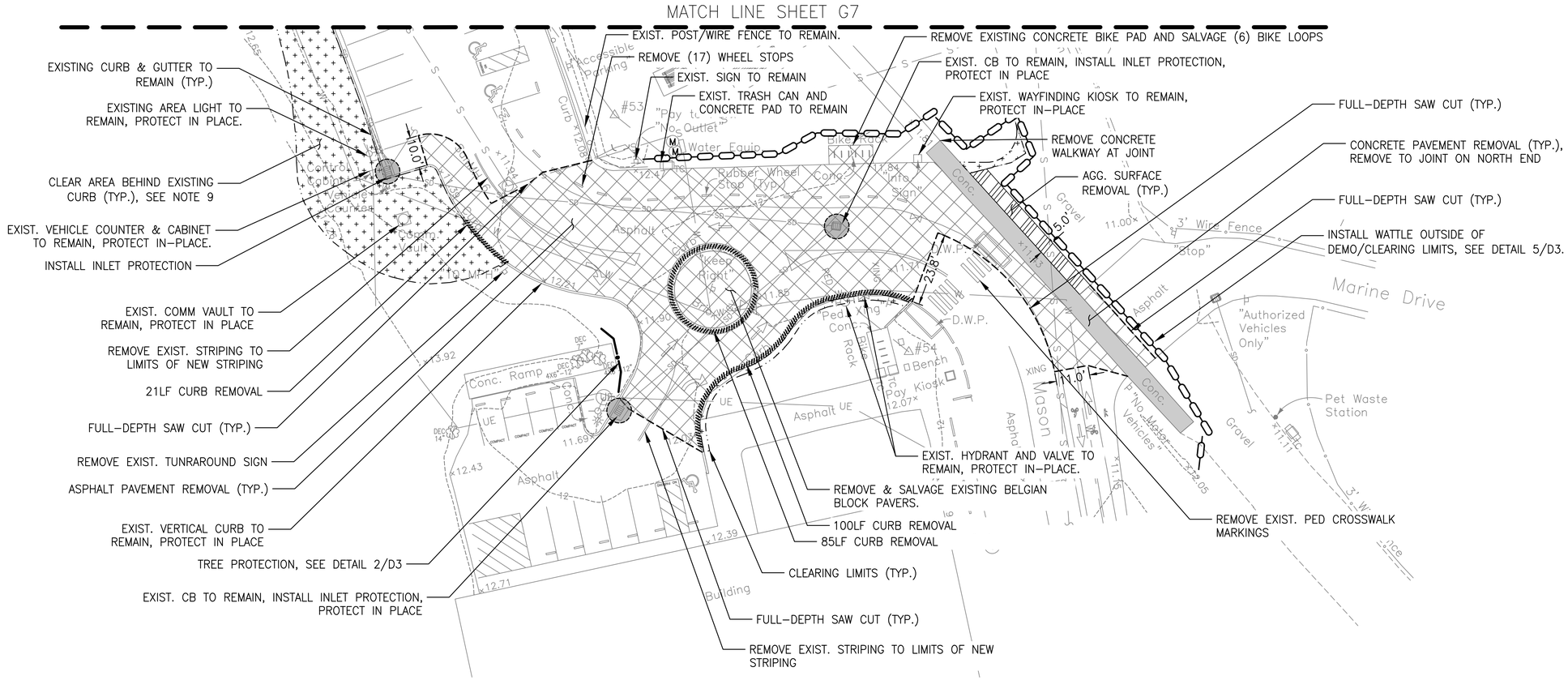

LEGEND

- CLEARING LIMITS
- ASPHALT PAVEMENT REMOVAL
- CONCRETE PAVEMENT REMOVAL
- AGG SURFACING REMOVAL
- CONCRETE CURB REMOVAL
- FULL DEPTH SAW CUT
- INLET PROTECTION
- TREE PROTECTION
- TREE REMOVAL
- WATTLE

NOTES:

1. SEE SHEETS C10–C11 FOR LAYOUT CONTROL POINTS THAT DEFINE LIMITS OF DEMOLITION.
2. CONTRACTOR IS RESPONSIBLE FOR VERIFYING LOCATION OF UNDERGROUND UTILITIES.
3. SALVAGED MATERIALS TO BE SAFELY STORED ON–SITE FOR FUTURE USE OR AS DIRECTED BY FIELD REPRESENTATIVE.
4. CONTRACTOR SHALL BE RESPONSIBLE FOR MAINTAINING EXISTING DRAINAGE THROUGH THE SITE DURING CONSTRUCTION.
5. PROTECT EXISTING UTILITIES, SIGNAGE, AND FEATURES IN PLACE NOT CALLED OUT FOR REMOVAL OR RELOCATION.
6. TESC MEASURES SHOWN ARE APPROXIMATE AND SHALL BE FIELD LOCATED AND APPROVED TO ACCOMMODATE SITE CONDITIONS AND WORK SCHEDULE.
7. CONTRACTOR SHALL PROVIDE EROSION CONTROL MAINTENANCE DURING CONSTRUCTION AND SHALL REMOVE EROSION CONTROL MEASURES AFTER CONSTRUCTION.
8. SOIL MANAGEMENT PLAN SHALL BE SUBMITTED AND APPROVED PER SPECIFICATIONS PRIOR TO ANY GROUND DISTURBING ACTIVITIES.
9. CLEAR VEGETATION AND SALVAGE TOPSOIL FOR REUSE IN SOIL PREP AREAS. STRIP TOPSOIL UP TO A DEPTH OF 6 INCHES. DEPTH OF TOPSOIL MAY VARY DUE TO EXISTING UTILITIES AND/OR PREVIOUS DISTURBANCE.

20' 0' 20' 40'
SCALE OF FEET

Know what's below. Call 811 before you dig.

LICENSED PROFESSIONAL ENGINEER KYLE DAVID CALDERS 66643 CIVIL STATE OF CALIFORNIA
12/20/24

DESIGNED: DP, JS	SUB SHEET NO.	TESC & DEMOLITION PLAN III
CADD: JS, AK	G8	GOLDEN GATE NATIONAL RECREATION AREA
TECH. REVIEW: KK, KB, KC		PRESIDIO OF SAN FRANCISCO | WEST BLUFF
DATE: DEC 2024		

DRAWING NO. 641 187495
PMIS/PKG NO. GOGA 244458
SHEET 9 OF 28

Plotted: Dec 20, 2024 – 3:48pm Joe.Schober O:\PROJECT\33200\33240W\04 CAD\ACAD\GOGA\244458\DRAWINGS\GEN\G6-G8 TESC & DEMOLITION PLAN.dwg Layout Name: 9

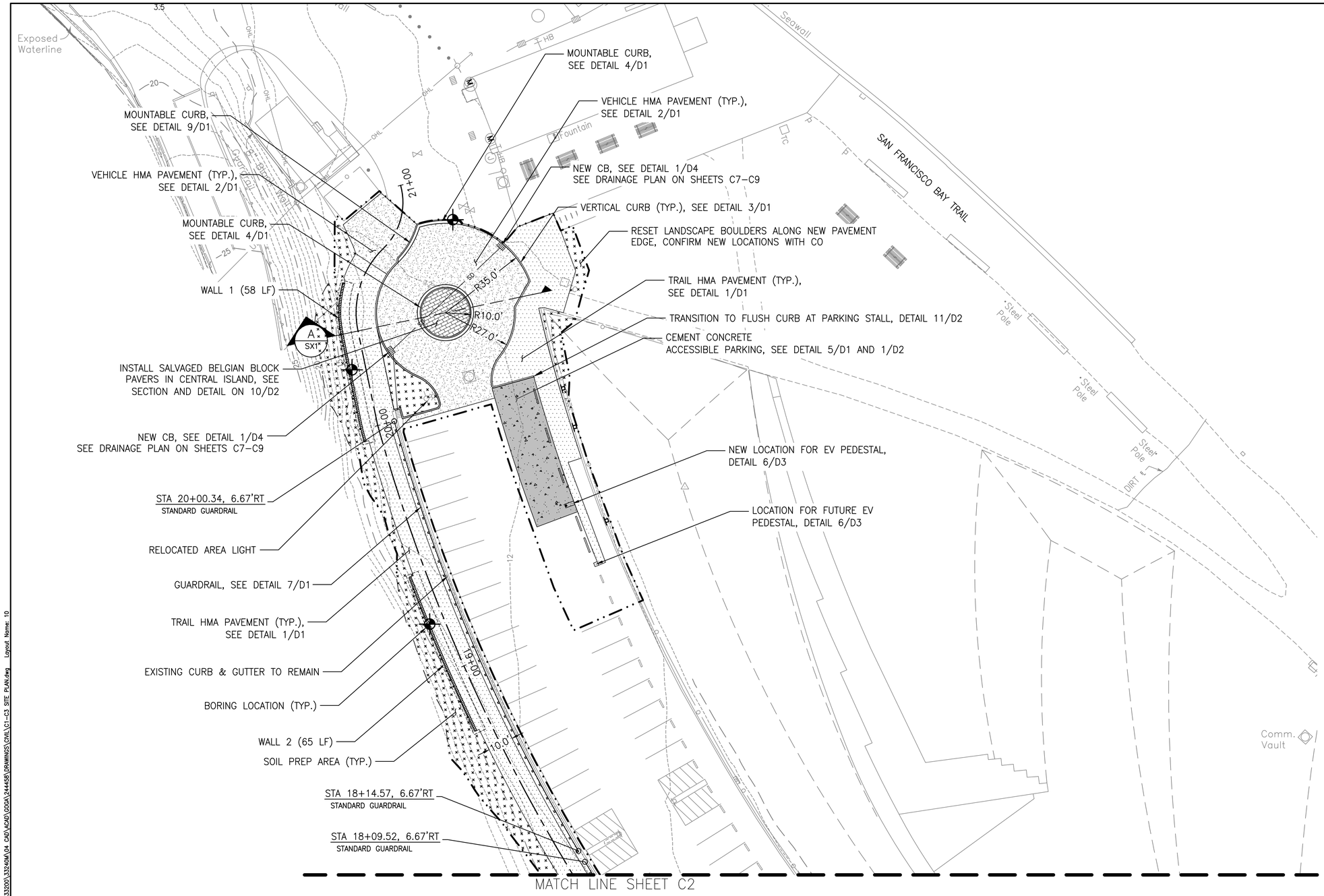

LEGEND

- TRAIL HMA PAVEMENT
- VEHICLE HMA PAVEMENT
- CEMENT CONCRETE PAVEMENT
- STABILIZED AGG SURFACING
- SOIL PREP AREA
- VERTICAL CURB
- CUT RETAINING WALL
- GUARDRAIL
- APPROXIMATE LIMITS OF WORK
- BORING LOCATION

NOTES:

1. SEE SHEETS C4–C5 FOR NEW BIKE PATH HORIZONTAL CONTROL, PLAN, AND PROFILE.
2. SEE SHEETS C10–C11 FOR LAYOUT CONTROL POINTS FOR CURB, SIDEWALK, ROADWAY, AND ELEVATIONS.
3. SEE SHEETS CH1–CH3 FOR STRIPING LAYOUT.
4. SEE SHEETS C7–C9 FOR DRAINAGE PLAN AND WALL HEIGHTS. SHEET D1 FOR WALL DETAIL.
5. SALVAGED TOPSOIL SHALL BE PLACED IN SOIL PREP AREAS. SEE DETAIL 3/D4.
6. LOCATIONS SHOWN FOR AREA LIGHTS ARE APPROXIMATE. FINAL LOCATION TO BE COORDINATED WITH CO PRIOR TO RELOCATION.

20' 0' 20' 40'
SCALE OF FEET

Know what's below. Call 811 before you dig.

LICENSED PROFESSIONAL ENGINEER KYLE DAVID CALDERS 68843 CIVIL STATE OF CALIFORNIA
12/20/24

DESIGNED:	SUB SHEET NO.	SITE PLAN I	DRAWING NO.
DP, JS	C1		641
DADD: JS, AK			187495
TECH. REVIEW: KK, KB, KC			PMIS/PKG NO. GOGA 244458
DATE: DEC 2024		GOLDEN GATE NATIONAL RECREATION AREA PRESIDIO OF SAN FRANCISCO | WEST BLUFF	SHEET 10 OF 28

Plotted: Dec 20, 2024 – 3:49pm Joe.Schober G:\PROJECT\32020\32240A\04 CAD\ACAD\GOGA\244458\DRAWINGS\CIVIL\C1-C3 SITE PLAN.dwg Layout Name: 10

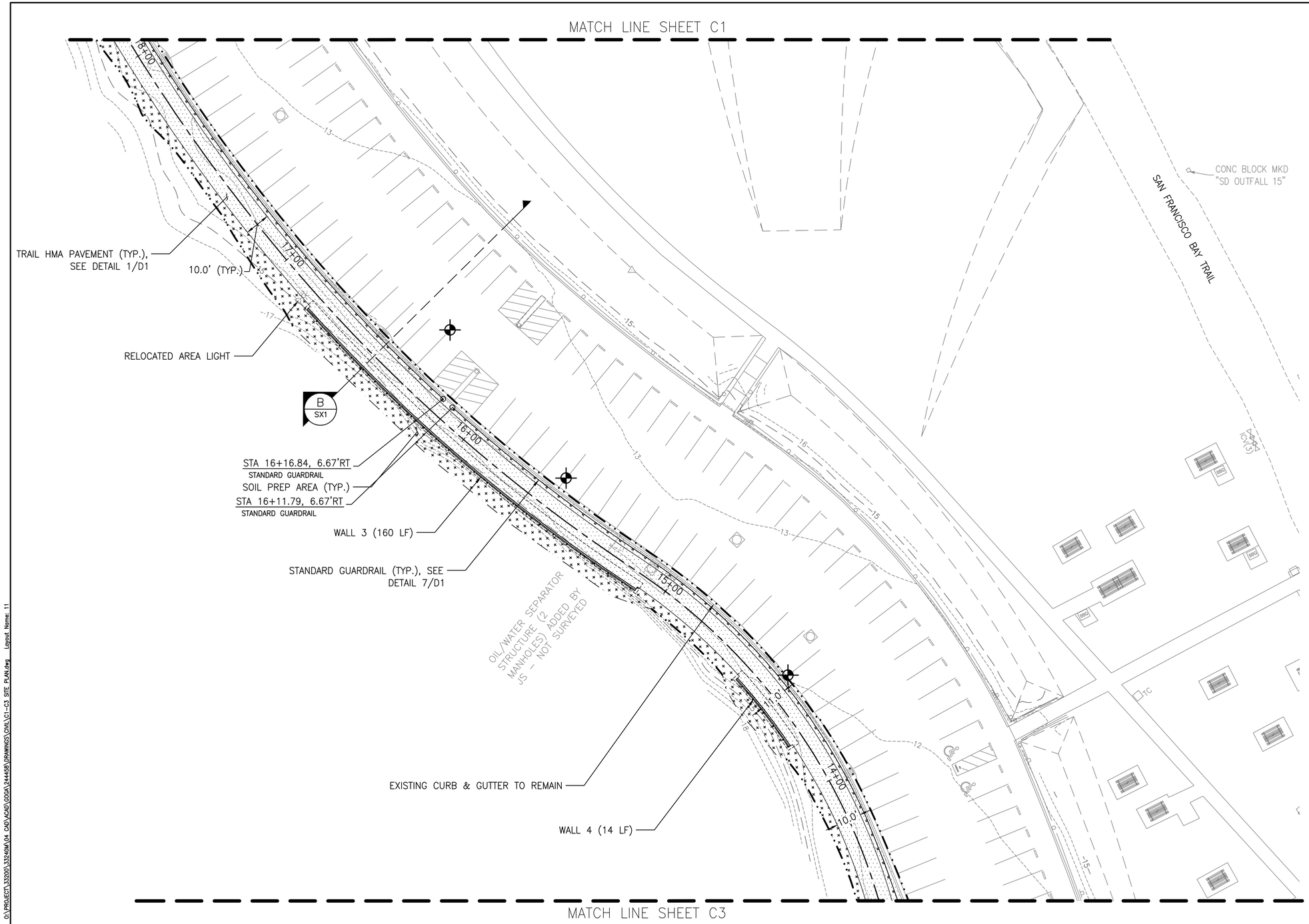

LEGEND

- TRAIL HMA PAVEMENT
- VEHICLE HMA PAVEMENT
- CEMENT CONCRETE PAVEMENT
- STABILIZED AGG SURFACING
- SOIL PREP AREA
- VERTICAL CURB
- CUT RETAINING WALL
- GUARDRAIL
- APPROXIMATE LIMITS OF WORK
- BORING LOCATION

NOTES:

1. SEE SHEETS C4–C5 FOR NEW BIKE PATH HORIZONTAL CONTROL, PLAN, AND PROFILE.
2. SEE SHEETS C10–C11 FOR LAYOUT CONTROL POINTS FOR CURB, SIDEWALK, ROADWAY, AND ELEVATIONS.
3. SEE SHEETS CH1–CH3 FOR STRIPING LAYOUT.
4. SEE SHEETS C7–C9 FOR DRAINAGE PLAN AND WALL HEIGHTS. SHEET D1 FOR WALL DETAIL.
5. SALVAGED TOPSOIL SHALL BE PLACED IN SOIL PREP AREAS. SEE DETAIL 3/D4.
6. LOCATIONS SHOWN FOR AREA LIGHTS ARE APPROXIMATE. FINAL LOCATION TO BE COORDINATED WITH CO PRIOR TO RELOCATION.

20' 0' 20' 40'
SCALE OF FEET

Know what's below. Call 811 before you dig.

LICENSED PROFESSIONAL ENGINEER KYLE DAVID CALDERS 68643 CIVIL STATE OF CALIFORNIA
12/20/24

DESIGNED: DP, JS	SUB SHEET NO.	SITE PLAN II	DRAWING NO. 641 187495
DRAFTED: JS, AK	C2	GOLDEN GATE NATIONAL RECREATION AREA PRESIDIO OF SAN FRANCISCO | WEST BLUFF	PMIS/PKG NO. GOGA 244458
TECH. REVIEW: KK, KB, KC			SHEET 11 OF 28
DATE: DEC 2024			

Plotted: Dec 20, 2024 – 3:49pm Joe.Schober O:\PROJECT\33200\33240M\04 CAD\ACAD\GOGA\244458\DRAWINGS\CIVIL\C1-C3 SITE PLAN.dwg Layout Name: 11

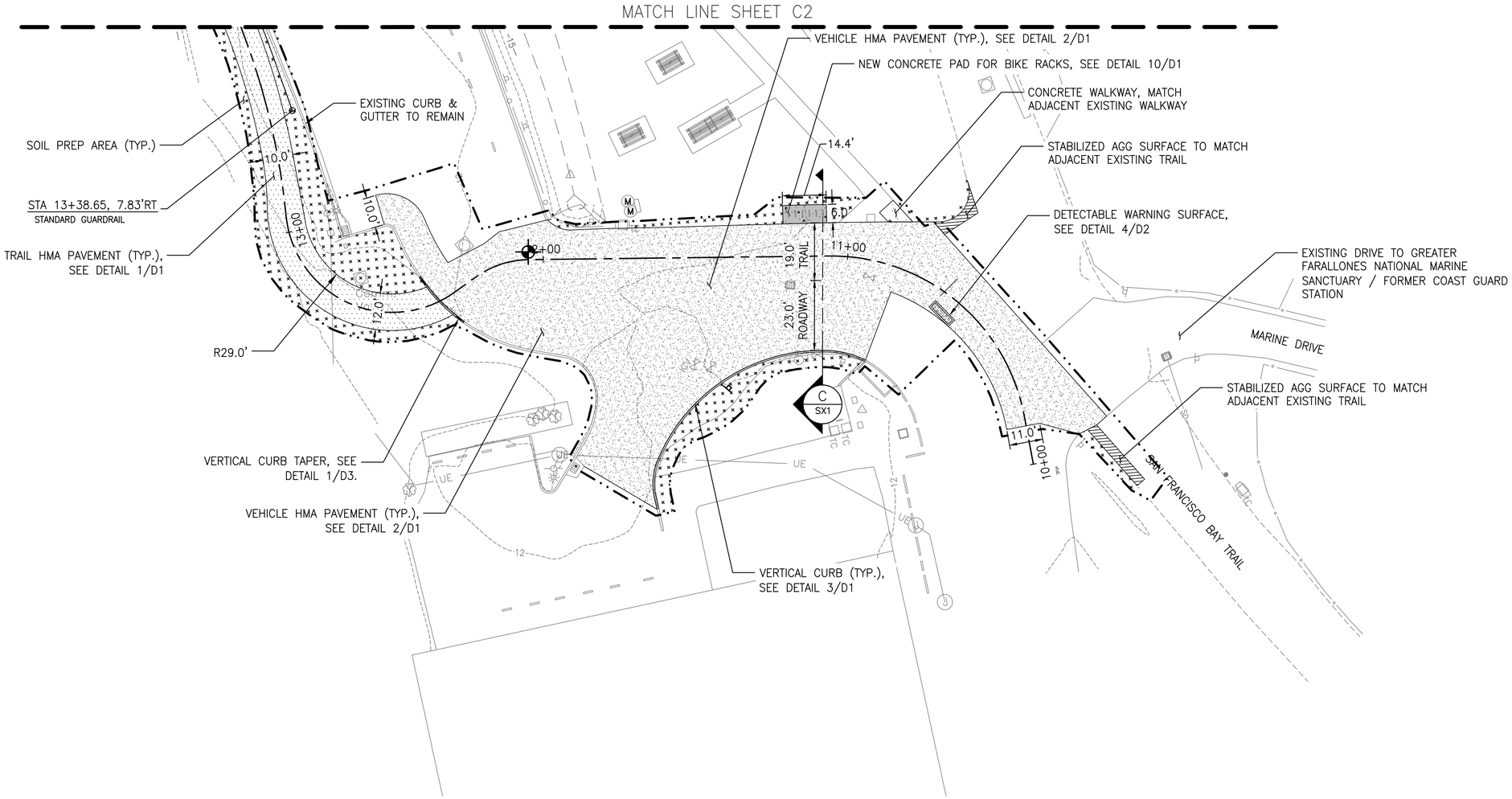

LEGEND

- TRAIL HMA PAVEMENT
- VEHICLE HMA PAVEMENT
- CEMENT CONCRETE PAVEMENT
- STABILIZED AGG SURFACING
- SOIL PREP AREA
- VERTICAL CURB
- CUT RETAINING WALL
- GUARDRAIL
- APPROXIMATE LIMITS OF WORK
- BORING LOCATION

NOTES:

1. SEE SHEETS C4–C5 FOR NEW BIKE PATH HORIZONTAL CONTROL, PLAN, AND PROFILE.
2. SEE SHEETS C10–C11 FOR LAYOUT CONTROL POINTS FOR CURB, SIDEWALK, ROADWAY, AND ELEVATIONS.
3. SEE SHEETS CH1–CH3 FOR STRIPING LAYOUT.
4. SEE SHEETS C7–C9 FOR DRAINAGE PLAN AND WALL HEIGHTS. SHEET D1 FOR WALL DETAIL.
5. SALVAGED TOPSOIL SHALL BE PLACED IN SOIL PREP AREAS. SEE DETAIL 3/D4.
6. LOCATIONS SHOWN FOR AREA LIGHTS ARE APPROXIMATE. FINAL LOCATION TO BE COORDINATED WITH CO PRIOR TO RELOCATION.

20' 0' 20' 40'
SCALE OF FEET

Know what's below. Call 811 before you dig.

LICENSED PROFESSIONAL ENGINEER KYLE DAVID CHILDERS 68643 CIVIL STATE OF CALIFORNIA
12/20/24

DESIGNED: DP, JS	SUB SHEET NO.	SITE PLAN III	DRAWING NO. 641 187495
DRAFTED: JS, AK	C3		PMIS/PKG NO. GOGA 244458
TECH. REVIEW: KK, KB, KC		GOLDEN GATE NATIONAL RECREATION AREA PRESIDIO OF SAN FRANCISCO | WEST BLUFF	SHEET 12 OF 28
DATE: DEC 2024			

Plotted: Dec 20, 2024 – 3:50pm Joe.Schober G:\PROJECT\3200\32420M\04 CAD\ACAD\GOGA\244458\DRAWINGS\CIVIL\C1-C3 SITE PLAN.dwg Layout Name: 12

CONSTRUCTION C/L ALIGNMENT TABLE					
NUMBER	STATION	LENGTH	RADIUS	BEARING	DELTA
L1	10+00.00	16.02'		N10°36'22"W	
C1	10+16.02	90.16'	64.50'	N50°39'02"W	80°05'20"
L2	11+06.18	98.71'		S89°18'18"W	
C2	12+04.88	18.23'	30.00'	S71°53'32"W	34°49'32"
L3	12+23.12	8.99'		S54°28'46"W	
C3	12+32.11	73.26'	35.00'	N65°33'35"W	119°55'18"
C4	13+05.36	74.46'	233.00'	N14°45'12"W	18°18'32"
C5	13+79.82	134.94'	237.00'	N40°13'08"W	32°37'19"
C6	15+14.76	187.55'	647.50'	N48°13'55"W	16°35'45"
C7	17+02.31	297.81'	702.00'	N27°46'51"W	24°18'23"
L4	20+00.11	37.71'		N11°48'16"W	
C8	20+37.82	35.33'	35.00'	N17°07'01"E	57°50'33"
C9	20+73.16	26.84'	25.00'	N15°16'45"E	61°31'05"

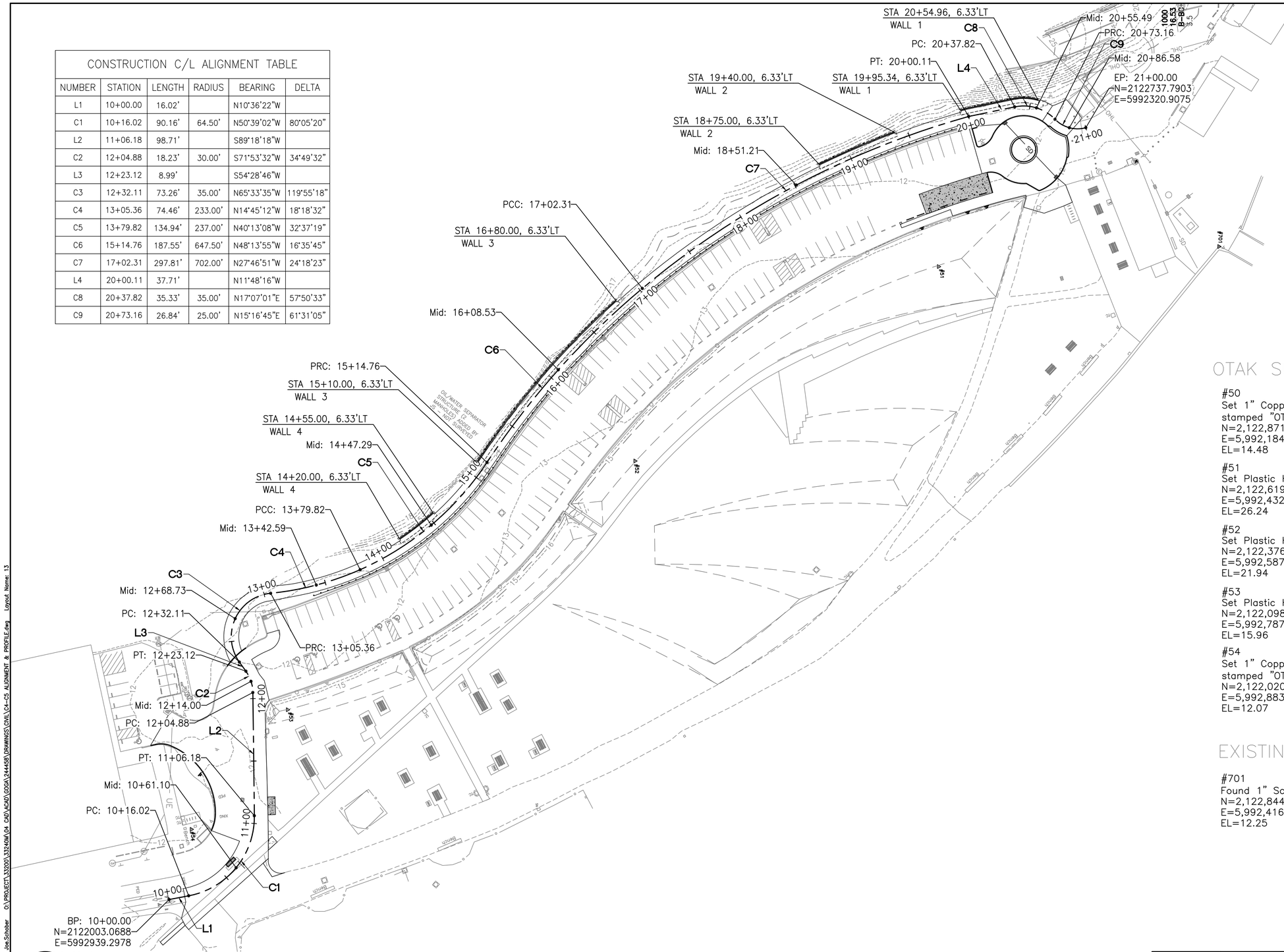

OTAK SURVEY CONTROL POINTS

#50
Set 1" Copper disk
stamped "OTAK CONTROL".
N=2,122,871.459
E=5,992,184.945
EL=14.48

#51
Set Plastic Hub.
N=2,122,619.760
E=5,992,432.199
EL=26.24

#52
Set Plastic Hub.
N=2,122,376.510
E=5,992,587.929
EL=21.94

#53
Set Plastic Hub.
N=2,122,098.043
E=5,992,787.255
EL=15.96

#54
Set 1" Copper disk
stamped "OTAK CONTROL".
N=2,122,020.919
E=5,992,883.080
EL=12.07

EXISTING CONTROL POINTS

#701
Found 1" Scribe "X".
N=2,122,844.408
E=5,992,416.088
EL=12.25

40' 0' 40' 80'
SCALE OF FEET

Know what's below. Call 811 before you dig.

LICENSED PROFESSIONAL ENGINEER KYLE DAVID CHILDERS 66843 CIVIL STATE OF CALIFORNIA
12/20/24

DESIGNED:	SUB SHEET NO.	ALIGNMENT & PROFILE I	DRAWING NO.
DP, JS	C4	GOLDEN GATE NATIONAL RECREATION AREA PRESIDIO OF SAN FRANCISCO | WEST BLUFF	641 187495
CADD: JS, AK			PMIS/PKG NO. GOGA 244458
TECH. REVIEW: KK, KB, KC			SHEET 13 OF 28
DATE: DEC 2024			

Plotted: Dec 20, 2024 – 3:51pm Joe.Schober O:\PROJECT\33200\33240M\04 CAD\ACAD\GOGA\244458\DRAWINGS\CIVIL\C4-C5 ALIGNMENT & PROFILE.dwg Layout Name: 13

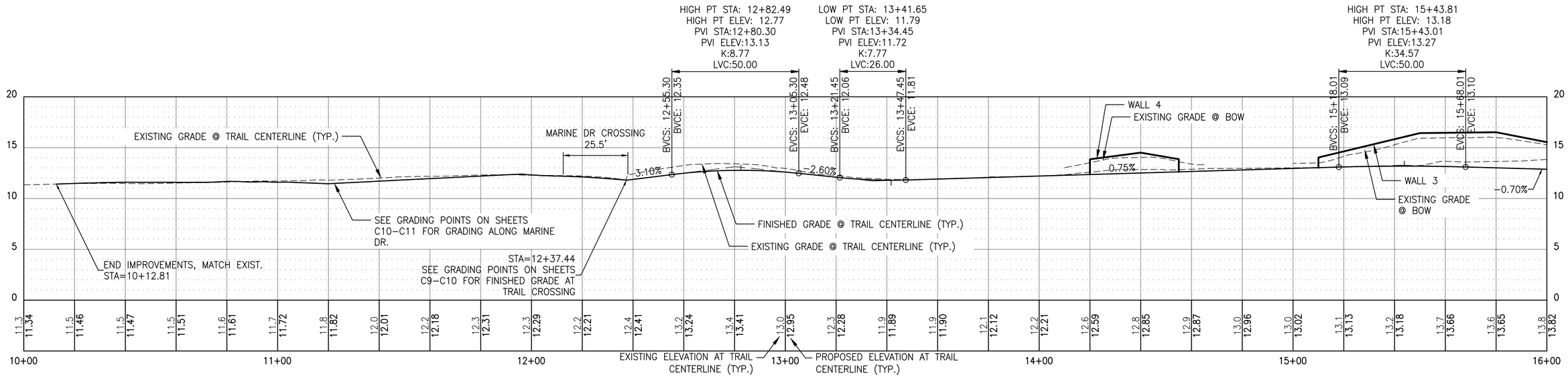

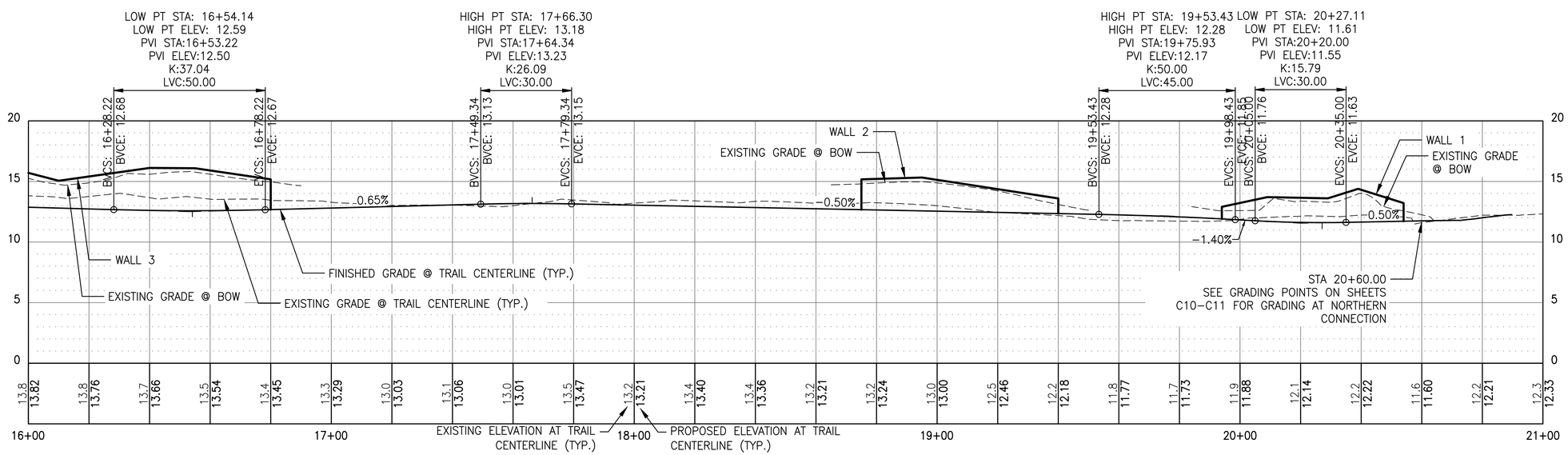

VERT 5' 0' 5' 10'
SCALE OF FEET

HORZ 20' 0' 20' 40'
SCALE OF FEET

Know what's below.
Call 811 before you dig.

LICENSED PROFESSIONAL ENGINEER
KYLE DAVID CHILDERS
68843
CIVIL
STATE OF CALIFORNIA
12/20/24

DESIGNED:	SUB SHEET NO.	ALIGNMENT & PROFILE II	DRAWING NO.
DP, JS	C5		641
CADD: JS, AK			187495
TECH. REVIEW: KK, KB, KC			PMIS/PKG NO. GOGA 244458
DATE: DEC 2024		GOLDEN GATE NATIONAL RECREATION AREA PRESIDIO OF SAN FRANCISCO | WEST BLUFF	SHEET 14 OF 28

Plotted: Dec. 20, 2024 – 3:51pm Joe.Schober G:\PROJECT\33200\33240A\04 CAD\ACAD\GOGA\244458\DRAWINGS\CIVIL\C4-C5 ALIGNMENT & PROFILE.dwg Layout Name: 14

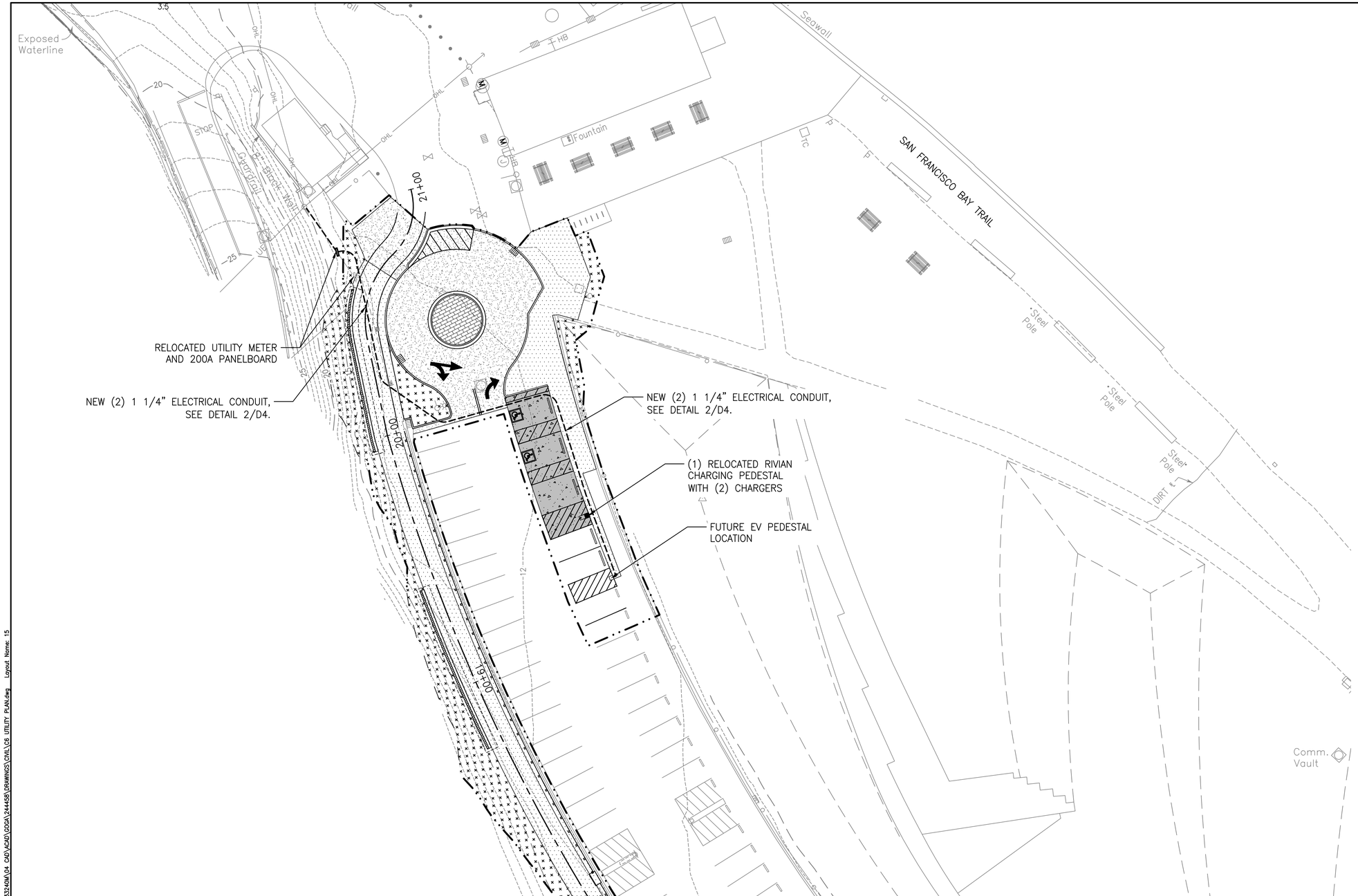

LEGEND

- EXISTING/PROPOSED CONDUIT
- EXISTING/PROPOSED CHARGING STATION
- EXISTING/PROPOSED UTILITY METER
- APPROXIMATE LIMITS OF WORK

NOTES:

1. UTILITIES TO BE RELOCATED BY CONTRACTOR.
2. CONTRACTOR TO VERIFY LOCATION OF EXISTING AND PROPOSED UTILITIES WITH CO.

20' 0' 20' 40'
SCALE OF FEET

Know what's below. Call 811 before you dig.

LICENSED PROFESSIONAL ENGINEER KYLE DAVID CALDERS 68843 CIVIL STATE OF CALIFORNIA
12/20/24

DESIGNED: DP, JS	SUB SHEET NO.	UTILITY PLAN	DRAWING NO. 641 187495
CADD: JS, AK	C6		PMIS/PKG NO. GOGA 244458
TECH. REVIEW: KK, KB, KC		GOLDEN GATE NATIONAL RECREATION AREA PRESIDIO OF SAN FRANCISCO | WEST BLUFF	SHEET 15 OF 28
DATE: DEC 2024			

Plotted: Dec 20, 2024 – 3:52pm Joe.Schober G:\PROJECT\33200\33240M\04 CAD\ACAD\GOGA\244458\DRAWINGS\CIVIL\C6 UTILITY PLAN.dwg Layout Name: 15

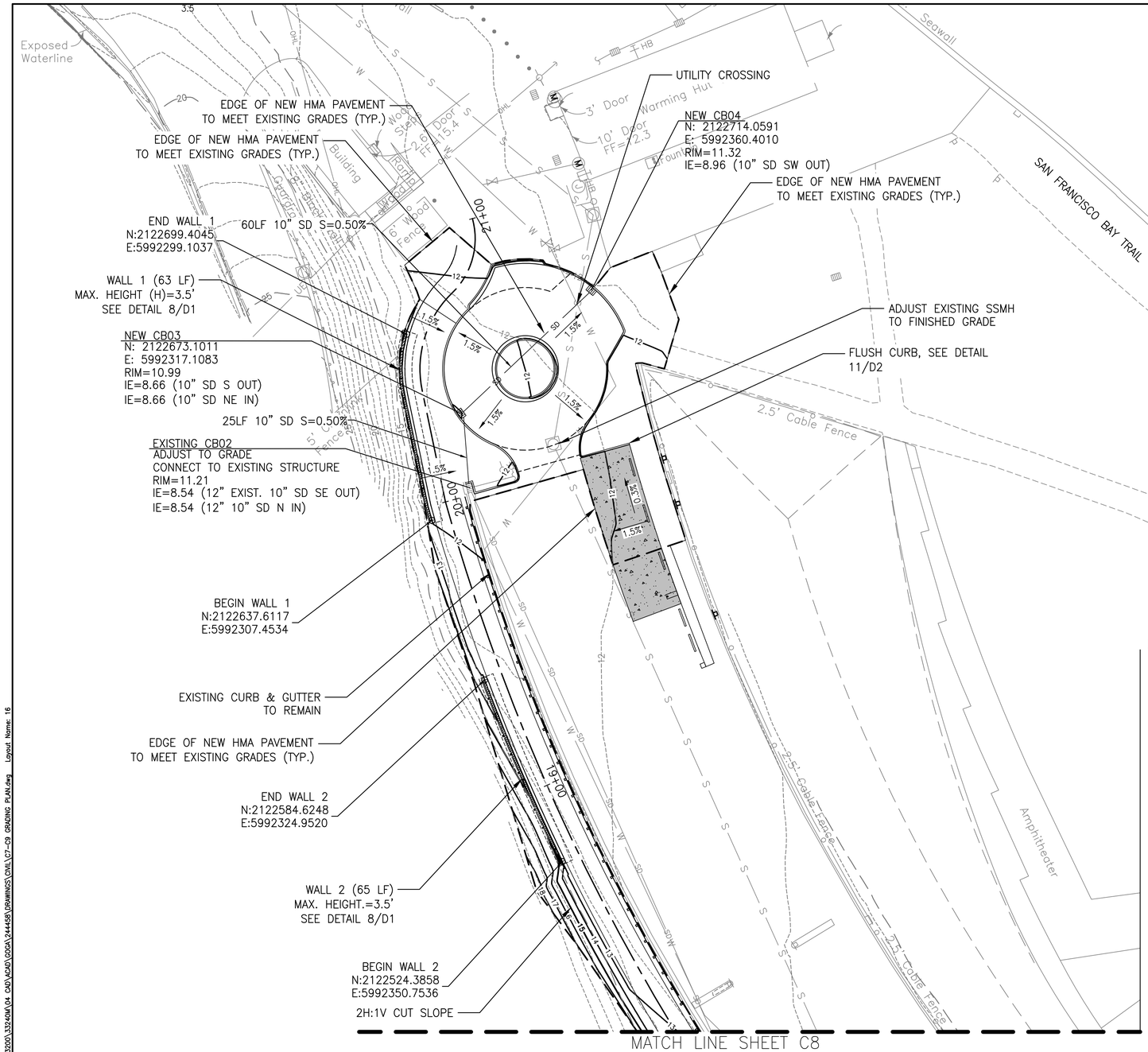

LEGEND

- PROPOSED MINOR CONTOURS
- PROPOSED MAJOR CONTOURS
- GRADING LIMITS
- SLOPE LABEL (ARROW FLOW)
- GRADEBREAK
- STORM DRAIN PIPE
- CATCH BASIN

NOTES:

1. SEE ALIGNMENT CONTROL & PROFILE FOR NEW BIKE PATH LAYOUT AND GRADING ON SHEETS C4–C5.
2. SEE GRADING POINTS FOR CURB AND SIDEWALK LAYOUTS AND ELEVATIONS ON SHEET C10–C11.
3. WALL BEGIN/END N/E CALLOUTS ARE AT FACE OF WALL UNLESS OTHERWISE NOTED.
4. ELEVATIONS ARE TO FINISHED GRADE UNLESS OTHERWISE NOTED. CURB ELEVATIONS ARE TO TOP BACK OF CURB UNLESS OTHERWISE NOTED.
5. LANDINGS, ACCESSIBLE PARKING STALLS, AND PARKING ACCESS AISLES SHALL NOT EXCEED 1.5% SLOPE IN ANY DIRECTION.
6. ABA ACCESSIBLE ROUTES SHALL NOT EXCEED A 4.0% MAXIMUM RUNNING SLOPE AND 1.5% MAXIMUM CROSS SLOPE.

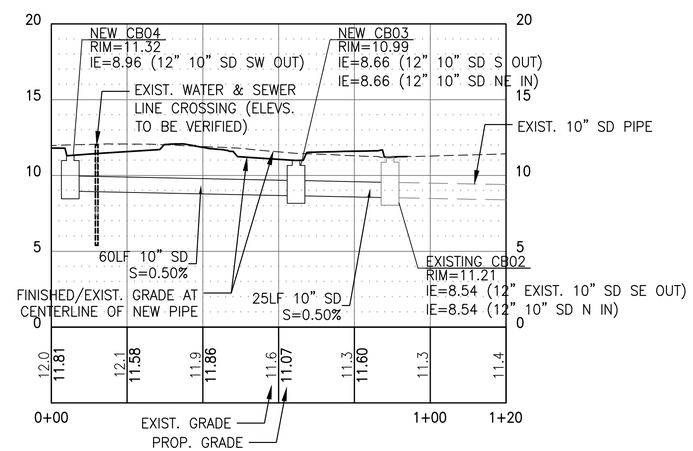

CB04 TO EXIST. CB02 PROFILE

HORIZ SCALE: 1"=20' VERT SCALE: 1"=5'

20' 0' 20' 40'
SCALE OF FEET

Know what's below. Call 811 before you dig.

LICENSED PROFESSIONAL ENGINEER KYLE DAVID CALDERS 68543 CIVIL STATE OF CALIFORNIA
12/20/24

DESIGNED: DP, JS	SUB SHEET NO.	GRADING & DRAINAGE PLAN I	DRAWING NO. 641 187495
CADD JS, AK	C7	GOLDEN GATE NATIONAL RECREATION AREA PRESIDIO OF SAN FRANCISCO | WEST BLUFF	PMIS/PKG NO. GOGA 244458
TECH. REVIEW: KK, KB, KC			SHEET 16 OF 28
DATE: DEC 2024			

Plotted: Dec 20, 2024 – 3:54pm Joe.Schober O:\PROJECT\33200\33240M\04 CAD\ACAD\GOGA\244458\DRAWINGS\CIVIL\C7-C9 GRADING PLAN.dwg Layout Name: 16

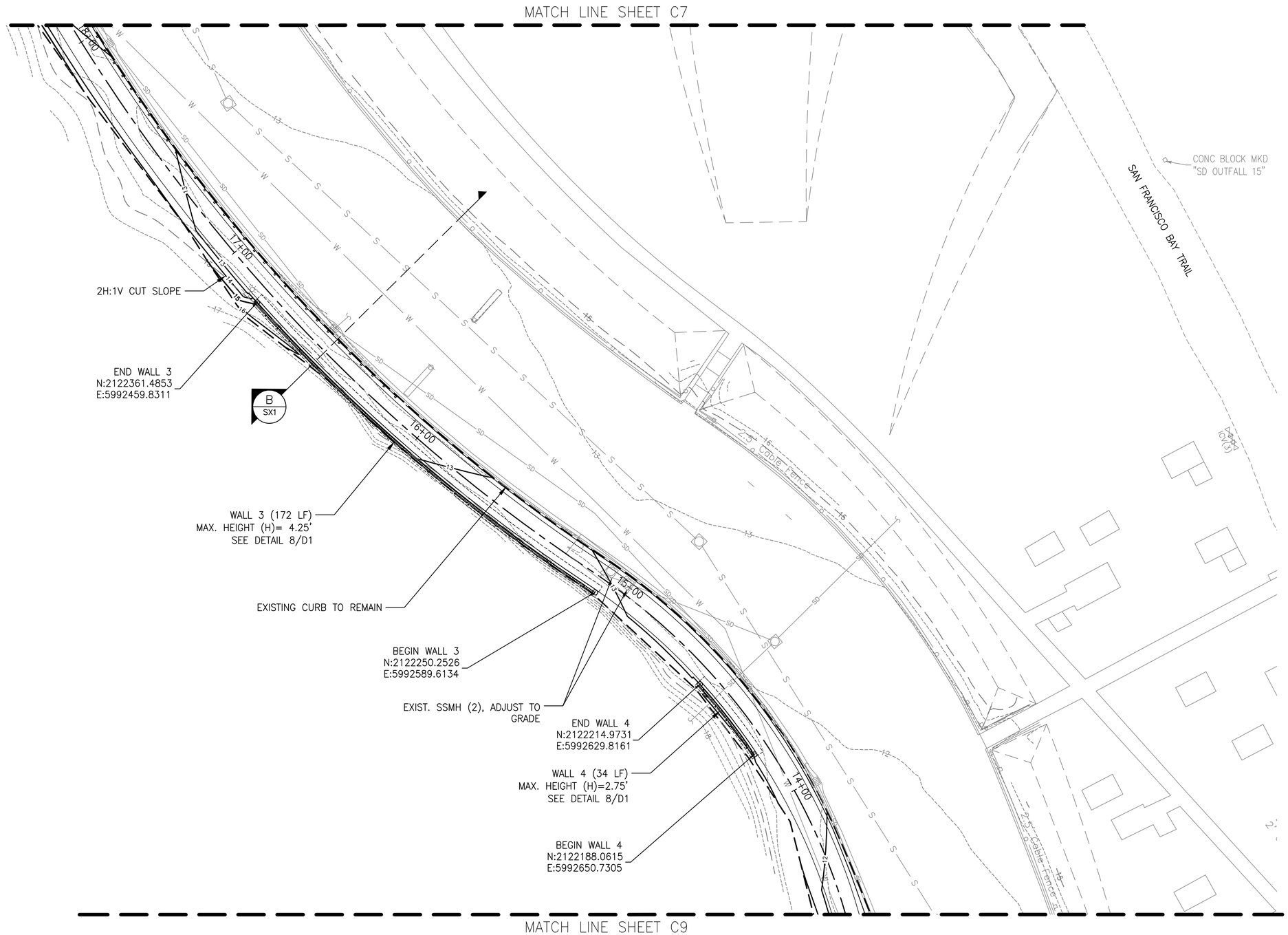

LEGEND

- PROPOSED MINOR CONTOURS
- PROPOSED MAJOR CONTOURS
- GRADING LIMITS
- SLOPE LABEL (ARROW FLOW)
- GRADEBREAK
- STORM DRAIN PIPE
- CATCH BASIN

NOTES:

1. SEE ALIGNMENT CONTROL & PROFILE FOR NEW BIKE PATH LAYOUT AND GRADING ON SHEETS C4–C5.
2. SEE GRADING POINTS FOR CURB AND SIDEWALK LAYOUTS AND ELEVATIONS ON SHEET C10–C11.
3. WALL BEGIN/END N/E CALLOUTS ARE AT FACE OF WALL UNLESS OTHERWISE NOTED.
4. ELEVATIONS ARE TO FINISHED GRADE UNLESS OTHERWISE NOTED. CURB ELEVATIONS ARE TO TOP BACK OF CURB UNLESS OTHERWISE NOTED.
5. LANDINGS, ACCESSIBLE PARKING STALLS, AND PARKING ACCESS AISLES SHALL NOT EXCEED 1.5% SLOPE IN ANY DIRECTION.
6. ABA ACCESSIBLE ROUTES SHALL NOT EXCEED A 4.0% MAXIMUM RUNNING SLOPE AND 1.5% MAXIMUM CROSS SLOPE.

20' 0' 20' 40'
SCALE OF FEET

Know what's below. Call 811 before you dig.

LICENSED PROFESSIONAL ENGINEER KYLE DAVID CHILDERS 66843 CIVIL STATE OF CALIFORNIA
12/20/24

DESIGNED:	SUB SHEET NO.	GRADING & DRAINAGE PLAN II	DRAWING NO.
DP, JS	C8		641 187495
CADD: JS, AK			PMIS/PKG NO. GOGA 244458
TECH. REVIEW: KK, KB, KC		GOLDEN GATE NATIONAL RECREATION AREA PRESIDIO OF SAN FRANCISCO | WEST BLUFF	SHEET 17 OF 28
DATE: DEC 2024			

Plotted: Dec 20, 2024 – 3:54pm Joe.Schober O:\PROJECT\33200\33240M\04 CAD\ACAD\GOGA\244458\DRAWINGS\CIVIL\C7-C9 GRADING PLAN.dwg Layout Name: 17

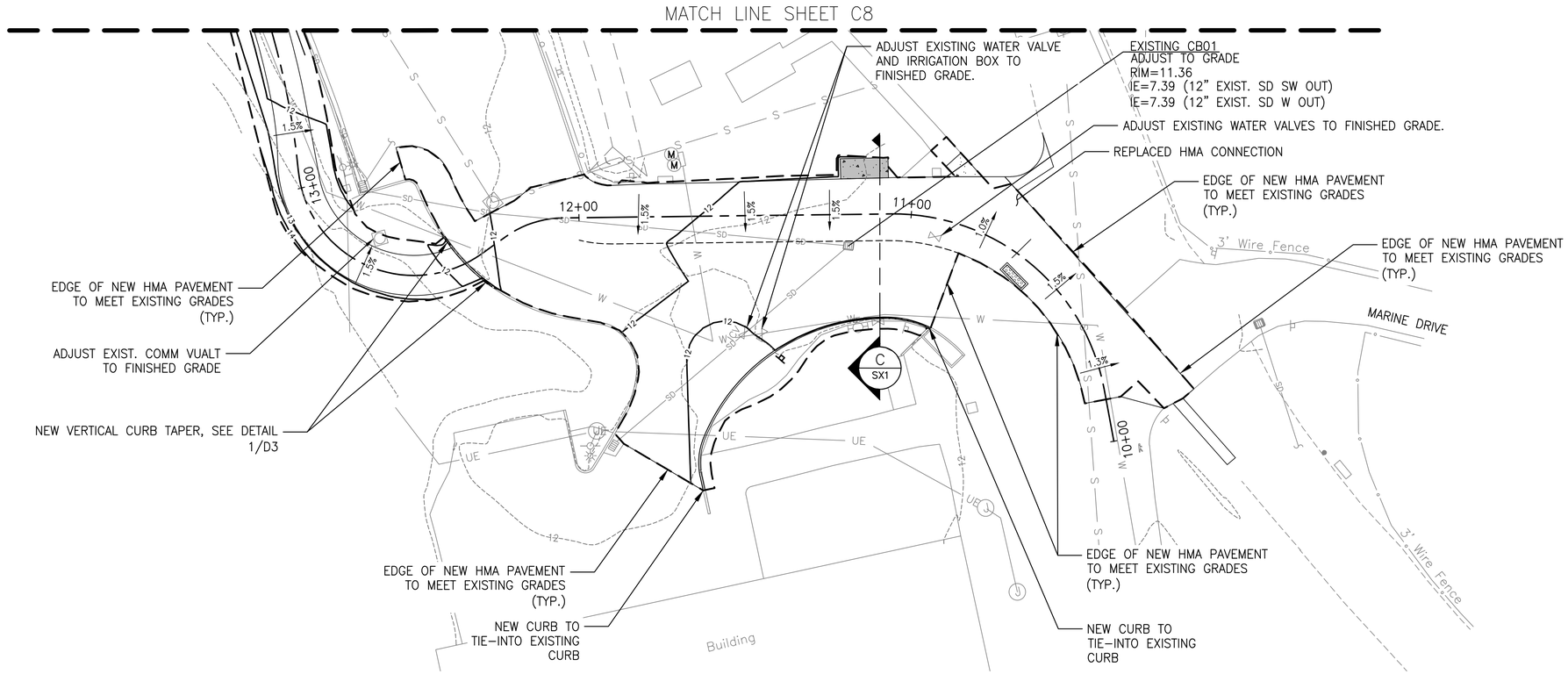

LEGEND

- PROPOSED MINOR CONTOURS
- PROPOSED MAJOR CONTOURS
- GRADING LIMITS
- SLOPE LABEL (ARROW FLOW)
- GRADEBREAK
- STORM DRAIN PIPE
- CATCH BASIN

NOTES:

1. SEE ALIGNMENT CONTROL & PROFILE FOR NEW BIKE PATH LAYOUT AND GRADING ON SHEETS C4–C5.
2. SEE GRADING POINTS FOR CURB AND SIDEWALK LAYOUTS AND ELEVATIONS ON SHEET C10–C11.
3. WALL BEGIN/END N/E CALLOUTS ARE AT FACE OF WALL UNLESS OTHERWISE NOTED.
4. ELEVATIONS ARE TO FINISHED GRADE UNLESS OTHERWISE NOTED. CURB ELEVATIONS ARE TO TOP BACK OF CURB UNLESS OTHERWISE NOTED.
5. LANDINGS, ACCESSIBLE PARKING STALLS, AND PARKING ACCESS AISLES SHALL NOT EXCEED 1.5% SLOPE IN ANY DIRECTION.
6. ABA ACCESSIBLE ROUTES SHALL NOT EXCEED A 4.0% MAXIMUM RUNNING SLOPE AND 1.5% MAXIMUM CROSS SLOPE.

20' 0' 20' 40'
SCALE OF FEET

Know what's below. Call 811 before you dig.

LICENSED PROFESSIONAL ENGINEER KYLE DAVID CHILDERS 68843 CIVIL STATE OF CALIFORNIA
12/20/24

DESIGNED: DP, JS	SUB SHEET NO.	GRADING & DRAINAGE PLAN III	DRAWING NO. 641 187495
CADD: JS, AK	C9	GOLDEN GATE NATIONAL RECREATION AREA PRESIDIO OF SAN FRANCISCO | WEST BLUFF	PMIS/PKG NO. GOGA 244458
TECH. REVIEW: KK, KB, KC			SHEET 18 OF 28
DATE: DEC 2024			

Plotted: Dec 20, 2024 - 3:54pm Joe.Schober G:\PROJECT\33200\33240M\04 CAD\ACAD\GOGA\244458\DRAWINGS\CIVIL\C7-C9 GRADING PLAN.dwg Layout Name: 18

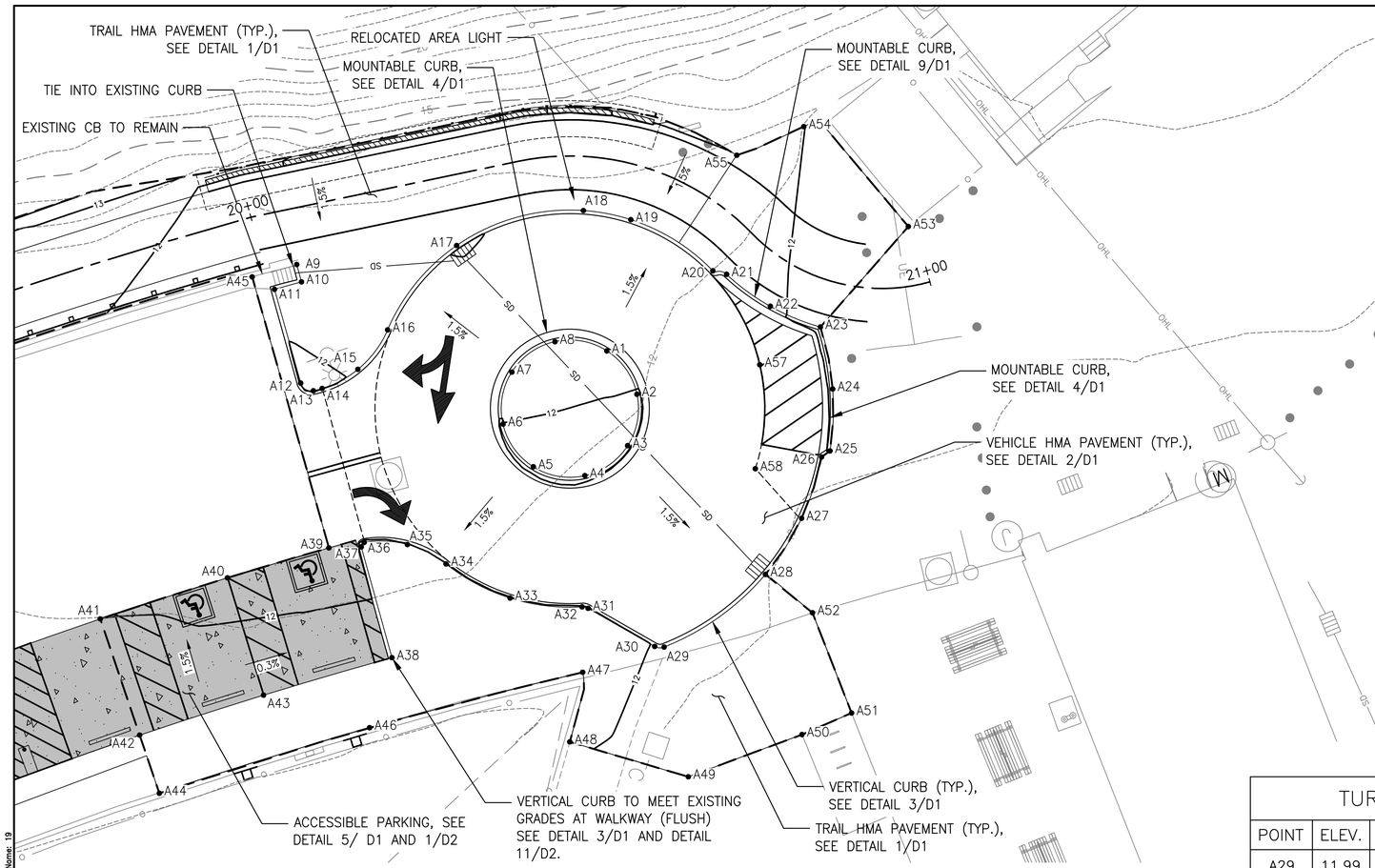

LEGEND

- PROPOSED MINOR CONTOURS
- PROPOSED MAJOR CONTOURS
- GRADING LIMITS
- SLOPE LABEL (ARROW FLOW)
- GRADEBREAK
- STORM DRAIN PIPE
- CATCH BASIN

NOTES:

1. SEE ALIGNMENT CONTROL & PROFILE FOR NEW BIKE PATH LAYOUT AND GRADING ON SHEETS C4–C5.
2. SEE GRADING POINTS FOR CURB AND SIDEWALK LAYOUTS AND ELEVATIONS ON SHEET C10–C11.
3. WALL BEGIN/END N/E CALLOUTS ARE AT FACE OF WALL UNLESS OTHERWISE NOTED.
4. ELEVATIONS ARE TO FINISHED GRADE UNLESS OTHERWISE NOTED. CURB ELEVATIONS ARE TO TOP BACK OF CURB UNLESS OTHERWISE NOTED.
5. LANDINGS, ACCESSIBLE PARKING STALLS, AND PARKING ACCESS AISLES SHALL NOT EXCEED 1.5% SLOPE IN ANY DIRECTION.
6. ABA ACCESSIBLE ROUTES SHALL NOT EXCEED A 4.0% MAXIMUM RUNNING SLOPE AND 1.5% MAXIMUM CROSS SLOPE.

TURNAROUND GRADING POINTS

POINT	ELEV.	NORTHING	EASTING	DESCRIPTION
A1	11.72	2122693.0518	5992330.4644	TBC, MOUNTABLE
A2	12.04	2122697.2166	5992336.4645	TBC, MOUNTABLE
A3	12.04	2122695.9305	5992343.5874	TBC, MOUNTABLE
A4	12.14	2122690.0000	5992347.7368	TBC, MOUNTABLE
A5	12.18	2122682.8677	5992346.5043	TBC, MOUNTABLE
A6	12.05	2122678.6738	5992340.6051	TBC, MOUNTABLE
A7	11.72	2122679.8906	5992333.4033	TBC, MOUNTABLE
A8	11.61	2122685.8593	5992329.1935	TBC, MOUNTABLE
A9	11.62	2122650.0952	5992318.4952	TBC, END, MATCH EXIST.
A10	11.76	2122650.7558	5992320.9065	TBC, AP
A11	11.80	2122647.0081	5992321.9415	TBC, AP
A12	12.16	2122650.6424	5992334.9222	TBC, AP, R=1.5'
A13	12.14	2122652.3997	5992335.9848	TBC, PCC, R=14.5'
A14	12.04	2122653.6196	5992335.6687	TBC, GB

TURNAROUND GRADING POINTS

POINT	ELEV.	NORTHING	EASTING	DESCRIPTION
A15	11.87	2122658.5662	5992333.0191	TBC, MP
A16	11.70	2122662.6861	5992327.5558	TBC, PRC, R=27.5'
A17	11.48	2122672.2456	5992315.8762	TBC, LOW–POINT
A18	11.57	2122689.7919	5992311.0283	TBC, GB
A19	11.61	2122696.3690	5992312.2922	TBC
A20	11.67	2122707.7242	5992319.3752	TBC, PCC, R=1.0'
A21	11.70	2122709.6413	5992319.8581	MOUNTABLE TBC, PRC, R=32.5'
A22	11.92	2122715.6991	5992324.2828	MOUNTABLE TBC, MP
A23	12.15	2122722.6314	5992327.1497	MOUNTABLE TBC, PC, R=36.5'
A24	12.08	2122724.3274	5992335.7346	TBC, MP
A25	12.02	2122723.9589	5992344.3083	MOUNTABLE, TBC, AP
A26	12.06	2122722.7928	5992345.1591	TBC, PC, R=35.5'
A27	11.93	2122720.0221	5992353.6417	TBC, GB
A28	11.80	2122715.0117	5992361.4176	TBC, MP

TURNAROUND GRADING POINTS

POINT	ELEV.	NORTHING	EASTING	DESCRIPTION
A29	11.99	2122700.9745	5992371.4816	TBC, PCC, R=1.5'
A30	11.99	2122699.6781	5992371.3883	TBC, PT
A31	12.13	2122690.4549	5992366.1087	TBC, PC, R=1.5'
A32	12.14	2122689.6176	5992365.9133	TBC, PRC, R=27.5'
A33	12.12	2122679.6467	5992364.6881	TBC, MP
A34	12.09	2122670.7811	5992359.9635	TBC, PRC, R=14.5'
A35	12.13	2122665.4243	5992357.2750	TBC, MP
A36	12.36	2122659.4378	5992356.9827	TBC, PCC, R=1.5'
A37	12.38	2122659.0353	5992357.6097	TBC, PT
A38	12.14	2122663.2799	5992372.9477	TBC, FLUSH CURB
A39	11.87	2122654.5505	5992357.7361	AP, MATCH EXIST.
A40	11.89	2122640.4966	5992361.8850	MP, MATCH EXIST.
A41	12.00	2122622.8831	5992367.5732	AP, MATCH EXIST.
A42	12.24	2122628.3355	5992383.6751	AP, MATCH EXIST.

TURNAROUND GRADING POINTS

POINT	ELEV.	NORTHING	EASTING	DESCRIPTION
A43	12.19	2122645.4919	5992378.1345	MP
A44	12.34	2122631.0618	5992391.7260	AP, MATCH EXIST.
A45	11.07	2122643.9274	5992320.2107	AP, MATCH EXIST.
A46	12.29	2122660.1825	5992382.6453	MP
A47	12.13	2122689.7040	5992374.9671	AP
A48	12.03	2122687.9210	5992384.6135	AP, MATCH EXIST.
A49	11.90	2122704.3309	5992389.4383	AP
A50	11.78	2122720.0730	5992383.5950	AP, MATCH EXIST.
A51	11.80	2122726.9460	5992380.6050	AP, MATCH EXIST.
A52	11.82	2122721.5265	5992366.7279	AP, MATCH EXIST.
A53	12.44	2122734.8049	5992313.2431	AP, MATCH EXIST.
A54	12.00	2122720.3283	5992299.3971	AP, MATCH EXIST.
A55	11.88	2122711.0454	5992303.3631	AP
A57	11.44	2122714.2359	5992332.3838	GB, MID

10' 0' 10' 20'
SCALE OF FEET

811 Know what's below. Call 811 before you dig.

LICENSED PROFESSIONAL ENGINEER KYLE DAVID CALDERS 68843 CIVIL STATE OF CALIFORNIA
12/20/24

DESIGNED: DP, JS	SUB SHEET NO.	GRADING POINTS I	DRAWING NO. 641 187495
CADD: JS, AK	C10	GOLDEN GATE NATIONAL RECREATION AREA PRESIDIO OF SAN FRANCISCO | WEST BLUFF	PMIS/PKG NO. GOGA 244458
TECH. REVIEW: KK, KB, KC			SHEET 19 OF 28
DATE: DEC 2024			

Plotted: Dec 20, 2024 - 3:56pm Joe.Schober O:\PROJECT\33200\33240\04 CAD\WASD\GOGA\244458\DRAWINGS\CIVIL\C10-C11 GRADING POINTS.dwg Layout Name: 19

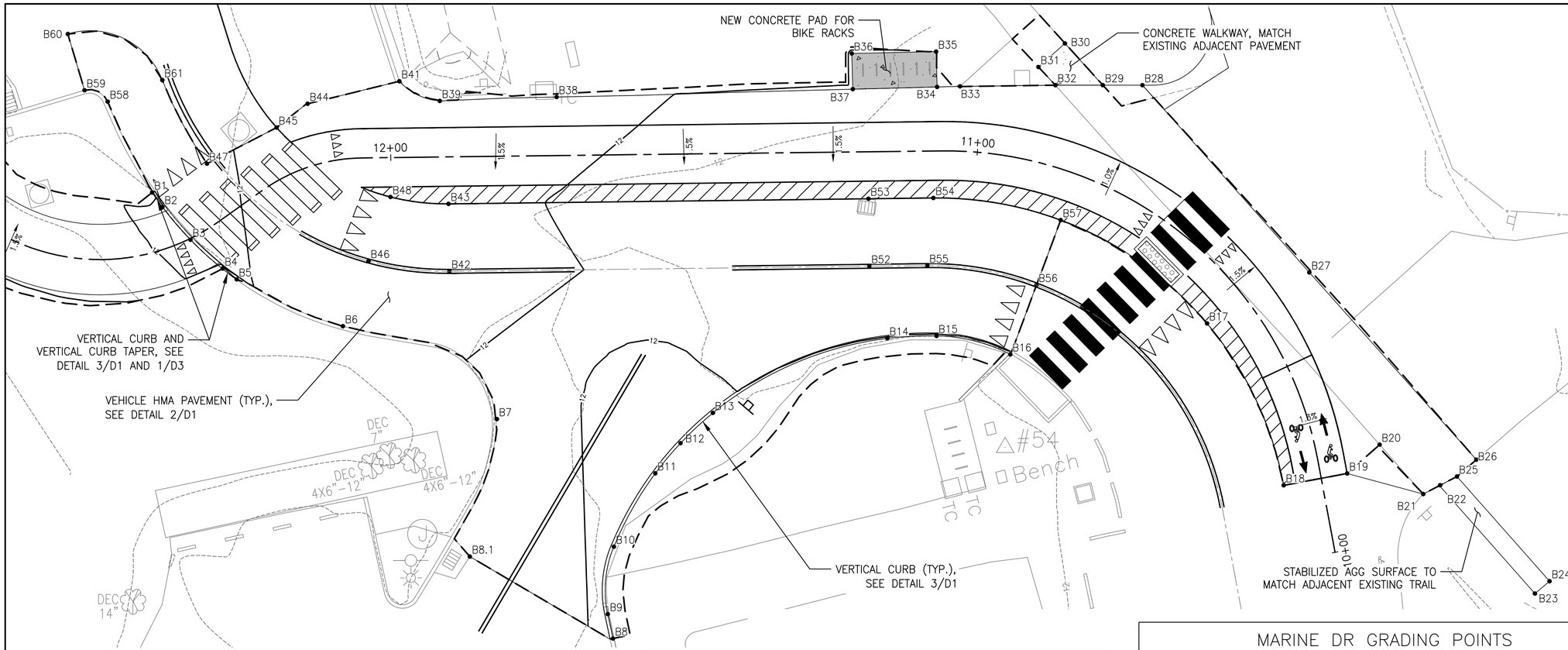

LEGEND

- PROPOSED MINOR CONTOURS
- PROPOSED MAJOR CONTOURS
- GRADING LIMITS
- SLOPE LABEL (ARROW FLOW)
- GRADEBREAK
- STORM DRAIN PIPE
- CATCH BASIN

NOTES:

1. SEE ALIGNMENT CONTROL & PROFILE FOR NEW BIKE PATH LAYOUT AND GRADING ON SHEETS C4–C5.
2. SEE GRADING POINTS FOR CURB AND SIDEWALK LAYOUTS AND ELEVATIONS ON SHEET C10–C11.
3. WALL BEGIN/END N/E CALLOUTS ARE AT FACE OF WALL UNLESS OTHERWISE NOTED.
4. ELEVATIONS ARE TO FINISHED GRADE UNLESS OTHERWISE NOTED. CURB ELEVATIONS ARE TO TOP BACK OF CURB UNLESS OTHERWISE NOTED.
5. LANDINGS, ACCESSIBLE PARKING STALLS, AND PARKING ACCESS AISLES SHALL NOT EXCEED 1.5% SLOPE IN ANY DIRECTION.
6. ABA ACCESSIBLE ROUTES SHALL NOT EXCEED A 4.0% MAXIMUM RUNNING SLOPE AND 1.5% MAXIMUM CROSS SLOPE.

MARINE DR GRADING POINTS

POINT	ELEV.	NORTHING	EASTING	DESCRIPTION
B1	12.16	2122064.3423	5992737.6770	TBC, MATCH EXIST., R=57.0'
B2	11.72	2122061.8741	5992739.4294	TBC, FLUSH W/ PATH
B3	11.83	2122056.2909	5992744.2139	TBC, FLUSH W/ PATH
B4	12.38	2122051.3951	5992749.6971	TBC, FLUSH W/ PATH
B5	12.44	2122049.5573	5992752.1014	TBC, MATCH EXIST.
B6	12.23	2122041.5716	5992770.2011	TOP, GC
B7	11.81	2122025.7538	5992796.4415	TOP OF PAVEMENT, GC
B8	12.60	2121988.3763	5992816.2243	TBC, MATCH EXIST.
B8.1	11.41	2122002.3400	5992791.8370	AP, MATCH EXIST.
B9	12.62	2121992.5317	5992815.3394	TBC, PC, R=19.5'
B10	12.65	2122004.0167	5992816.3801	TBC, PCC, R=58.0'
B11	12.70	2122016.5135	5992823.4463	TBC, GC
B12	12.70	2122021.6491	5992827.7408	TBC, GC
B13	12.54	2122026.8065	5992833.2611	TBC, GC
B14	12.28	2122039.5129	5992863.0157	TBC, GC
B15	12.33	2122039.9204	5992871.3811	TBC, PCC, R=19.5'
B16	???	2122036.7755	5992883.9550	TBC, MATCH EXIST.
B17	11.71	2122042.0529	5992917.4862	MID, MATCH EXIST.
B18	11.51	2122014.4674	5992930.5503	AP, MATCH EXIST.
B19	11.36	2122016.4920	5992941.3624	AP, MATCH EXIST.
B20	11.37	2122021.3961	5992946.8976	AP, MATCH EXIST.

MARINE DR GRADING POINTS

POINT	ELEV.	NORTHING	EASTING	DESCRIPTION
B21	11.33	2122012.9890	5992954.3460	AP, MATCH EXIST.
B22	11.26	2122014.4830	5992957.2130	AP, MATCH EXIST.
B23	???	2121996.0298	5992973.3732	AP, MATCH EXIST.
B24	???	2121998.1390	5992975.8630	AP, MATCH EXIST.
B25	11.19	2122015.9770	5992960.0800	AP, MATCH EXIST.
B26	11.16	2122018.8385	5992963.3770	AP, MATCH EXISTING
B27	11.36	2122050.7358	5992934.9217	MID
B28	???	2122082.6330	5992906.4663	AP
B29	11.54	2122082.6330	5992899.7148	MATCH EXIST.
B30	11.63	2122089.7427	5992893.2613	AP, MATCH EXIST.
B31	11.78	2122085.7058	5992888.7645	AP, MATCH EXIST.
B32	11.75	2122082.6330	5992891.6390	AP, MATCH EXIST.
B33	11.76	2122082.4310	5992875.3880	PC, R=75.0', MATCH EXIST.
B34	11.76	2122082.3285	5992871.4829	AP
B35	11.85	2122088.3523	5992871.3018	AP
B36	11.71	2122088.0360	5992856.9280	AP
B37	11.62	2122081.9513	5992857.1142	AP
B38	12.25	2122080.6108	5992806.6247	EOW, GC
B39	12.50	2122079.9410	5992786.7150	PT
B41	12.21	2122083.2949	5992779.8173	AP, MATCH EXIST., R=10.0'
B42	12.22	2122050.9178	5992788.3450	CENTERLINE, PC, R=50.0'

MARINE DR GRADING POINTS

POINT	ELEV.	NORTHING	EASTING	DESCRIPTION
B43	12.20	2122062.4169	5992788.2055	PT, GB
B44	12.16	2122079.4561	5992764.1850	AP, MATCH EXIST.
B45	12.12	2122075.4144	5992758.8938	AP, MATCH EXIST., R=38.5'
B46	12.33	2122052.6811	5992774.5634	CENTERLINE, GC
B47	11.88	2122069.2599	5992747.0327	AP, MATCH EXIST.
B48	12.33	2122063.5872	5992778.3070	HIGH POINT, TOP
B52	11.57	2122051.7858	5992859.9228	CENTERLINE, GC
B53	11.33	2122063.2853	5992859.7833	GB, TOP
B54	11.44	2122063.4195	5992870.8476	PC, R=60.0'
B55	11.61	2122051.9058	5992869.8139	CENTERLINE, PC, R=50.5'
B56	11.71	2122048.5946	5992888.4212	CENTERLINE, MATCH EXIST.
B57	11.68	2122059.6417	5992892.5411	AP, PC, R=60.0', MATCH EXIST.
B58	11.54	2122079.8351	5992730.1083	FLOWLINE, PC
B59	11.41	2122081.7581	5992726.1592	FLOWLINE, AP, MATCH EXIST.
B60	11.38	2122091.3438	5992723.3105	PC, MATCH EXIST, R=13.25'
B61	11.65	2122083.5041	5992739.4110	PCC, MATCH EXIST, R=70.0'

10' 0' 10' 20'
SCALE OF FEET

LICENSED PROFESSIONAL ENGINEER KYLE DAVID CALDERS 68843 CIVIL STATE OF CALIFORNIA
12/20/24

DESIGNED: DP, JS
CADD: JS, AK
TECH. REVIEW: KK, KB, KC
DATE: DEC 2024

SUB SHEET NO. C11

GRADING POINTS II

GOLDEN GATE NATIONAL RECREATION AREA
PRESIDIO OF SAN FRANCISCO | WEST BLUFF

DRAWING NO. 641 187495
PMIS/PKG NO. GOGA 244458
SHEET 20 OF 28

811 Know what's below. Call 811 before you dig.

Plotted: Dec 20, 2024 – 3:56pm Joe.Schober O:\PROJECT\33200\33240M\04 CAD\ACAD\GOGA\244458\DRAWINGS\CIVIL\C10-C11 GRADING POINTS.dwg Layout Name: 20

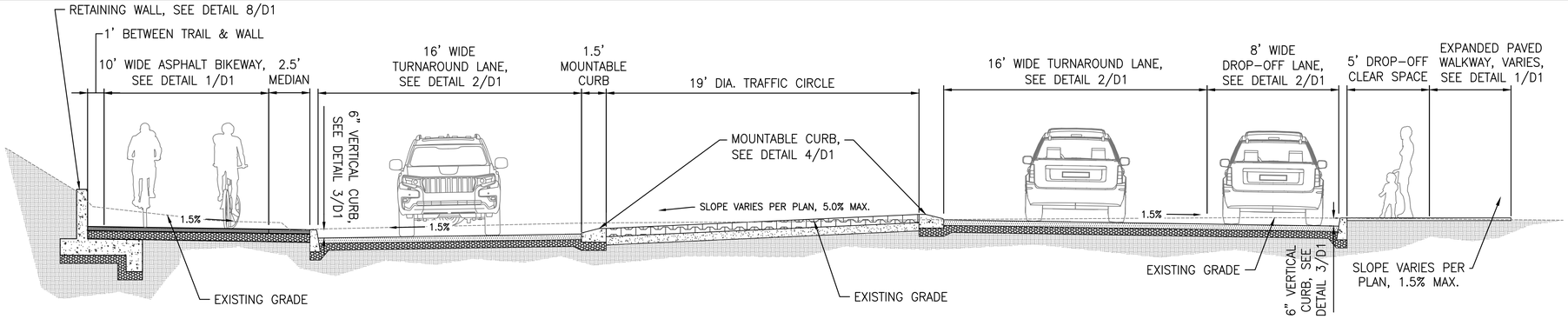

A SX1 TURNAROUND TYPICAL SECTION
NTS

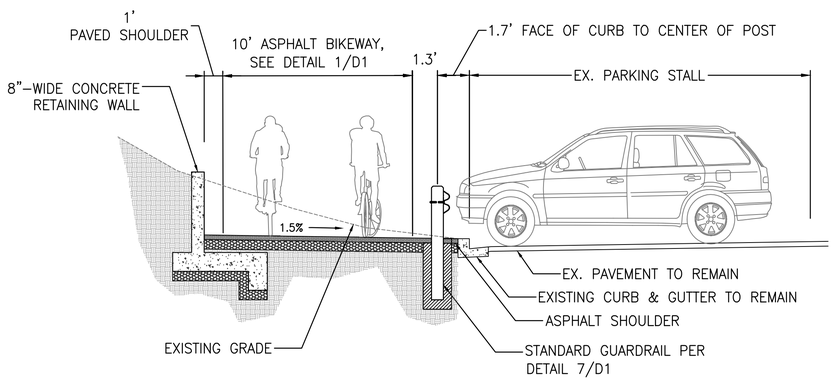

B SX1 TRAIL & PARKING LOT TYPICAL SECTION
NTS

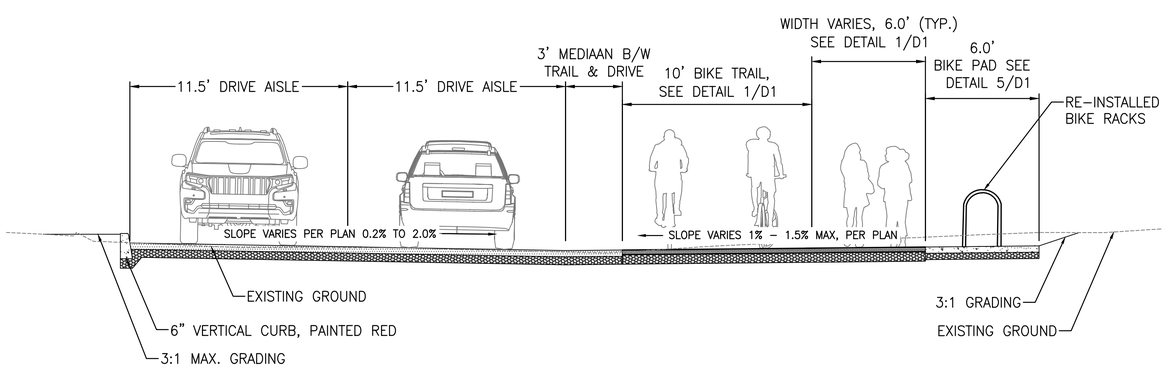

C SX1 TRAIL & MASON ST TYPICAL SECTION
NTS

Know what's below. Call 811 before you dig.

LICENSED PROFESSIONAL ENGINEER KYLE DAVID CALDERS C 68543 CIVIL STATE OF CALIFORNIA
12/20/24

DESIGNED: DP, JS	SUB SHEET NO.	TYPICAL SECTIONS	DRAWING NO. 641 187495
CADD JS, AK	SX1		PMIS/PKG NO. GOGA 244458
TECH. REVIEW: KK, KB, KC		GOLDEN GATE NATIONAL RECREATION AREA PRESIDIO OF SAN FRANCISCO | WEST BLUFF	SHEET 21 OF 28
DATE: DEC 2024			

Plotted: Dec 20, 2024 - 3:57pm Joe.Schober O:\PROJECT\33200\33240M\04 CAD\ACAD\GOGA\244458\DRAWINGS\CIVIL\SX SECTIONS.dwg Layout Name: 21

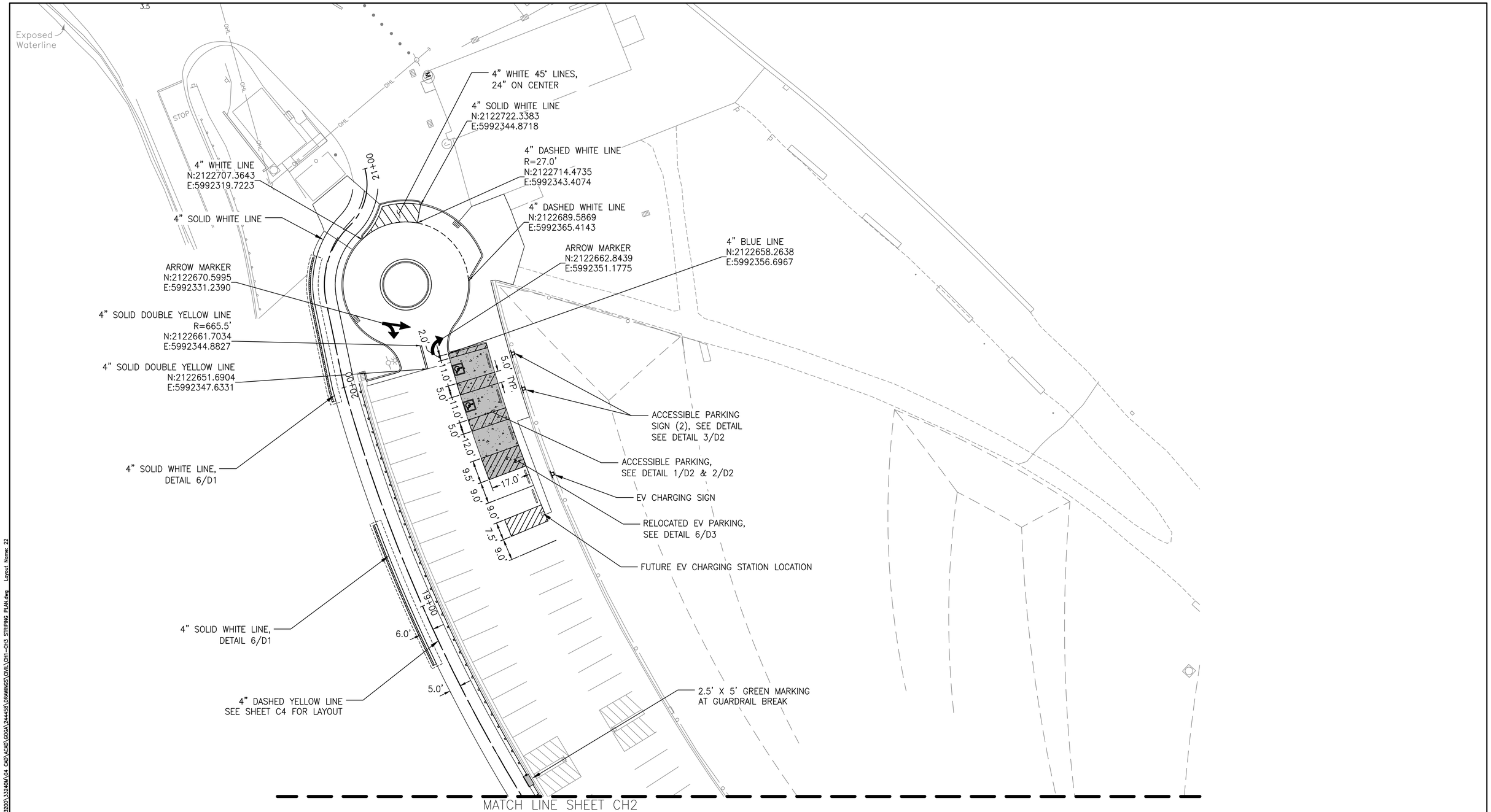

20' 0' 20' 40'
SCALE OF FEET

Know what's below. Call 811 before you dig.

LICENSED PROFESSIONAL ENGINEER KYLE DAVID CALDERS 68543 CIVIL STATE OF CALIFORNIA
12/20/24

DESIGNED: DP, JS	SUB SHEET NO.	STRIPING PLAN I	DRAWING NO. 641 187495
CADD JS, AK	CH1		PMIS/PKG NO. GOGA 244458
TECH. REVIEW: KK, KB, KC		GOLDEN GATE NATIONAL RECREATION AREA PRESIDIO OF SAN FRANCISCO | WEST BLUFF	SHEET 22 OF 28
DATE: DEC 2024			

Plotted: Dec 20, 2024 – 3:58pm Joe.Schober O:\PROJECT\33200\33240M\04 CAD\ACAD\GOGA\244458\DRAWINGS\CIVIL\CH1-CH3 STRIPING PLAN.dwg Layout Name: 22

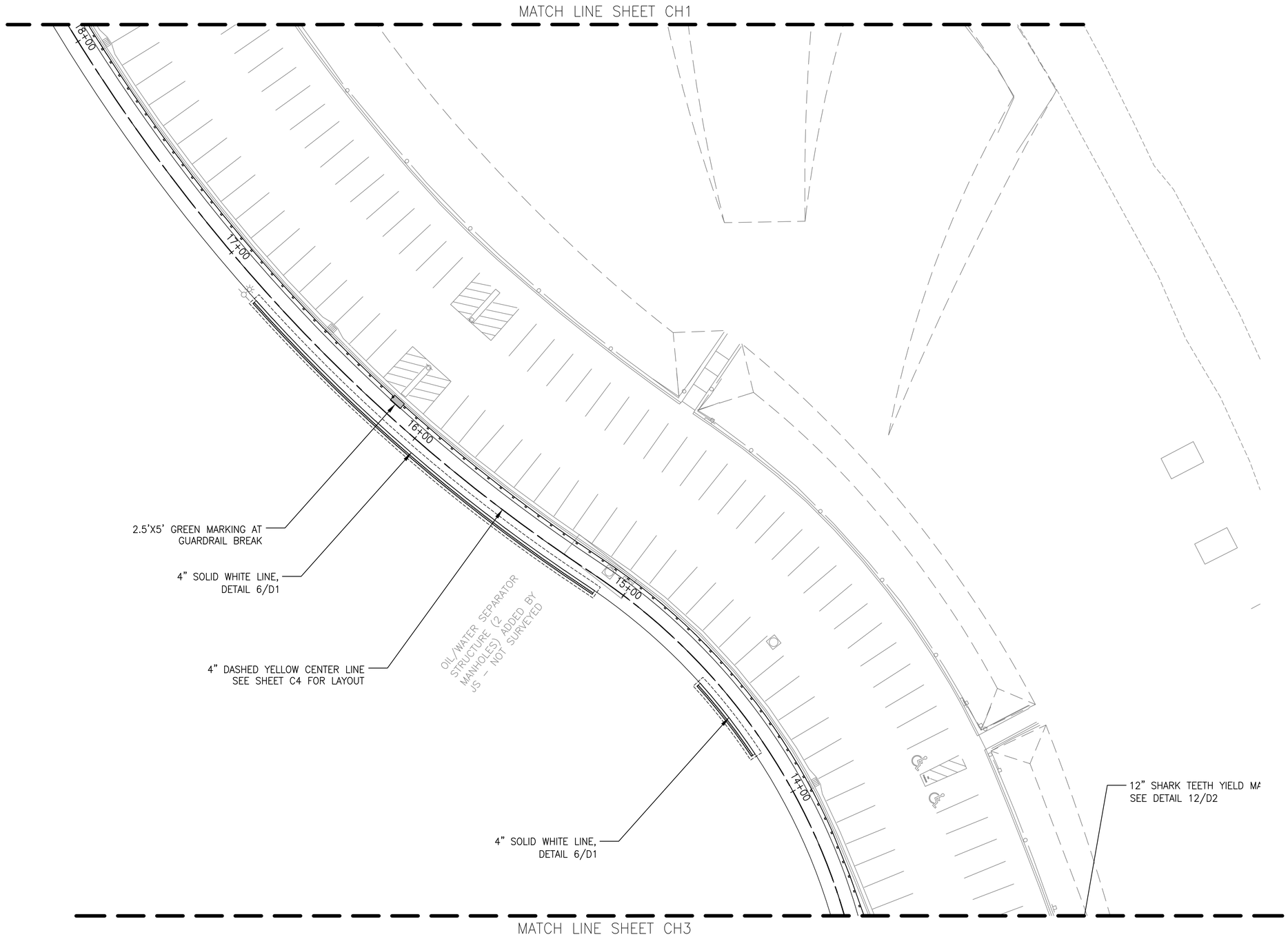

20' 0' 20' 40'
SCALE OF FEET

Know what's below. Call 811 before you dig.

LICENSED PROFESSIONAL ENGINEER KYLE DAVID CALDERS 68843 CIVIL STATE OF CALIFORNIA
12/20/24

DESIGNED:	SUB SHEET NO.	STRIPING PLAN II	DRAWING NO.
DP, JS	CH2		641
DADD JS, AK			187495
TECH. REVIEW: KK, KB, KC		GOLDEN GATE NATIONAL RECREATION AREA	PMIS/PKG NO. GOGA 244458
DATE: DEC 2024		PRESIDIO OF SAN FRANCISCO | WEST BLUFF	SHEET 23 OF 28

Plotted: Dec 20, 2024 – 3:58pm Joe.Schober G:\PROJECT\33200\33240A\04 CAD\ACAD\GOGA\244458\DRAWINGS\CIVIL\CH1-CH3 STRIPING PLAN.dwg Layout Name: 23

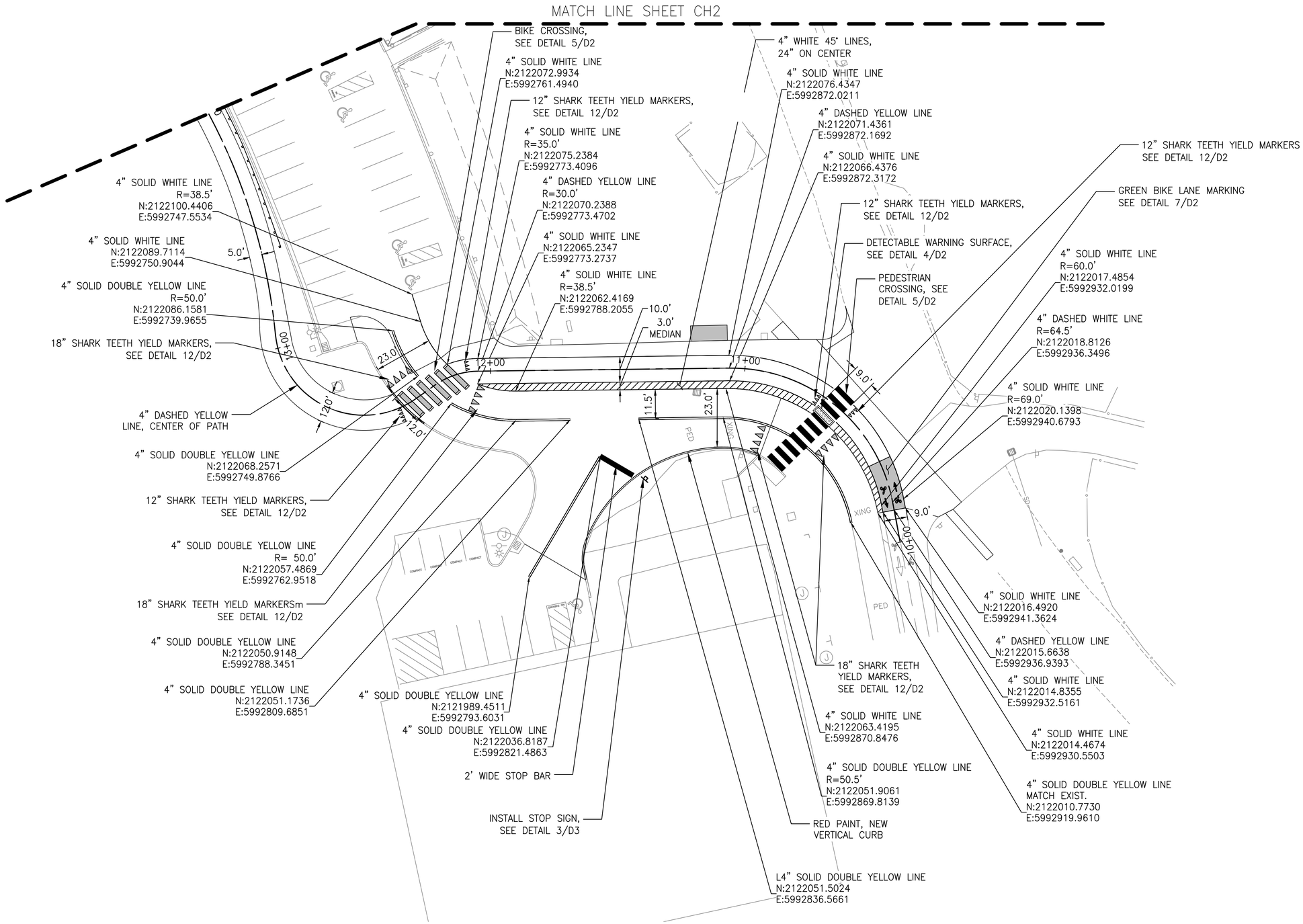

20' 0' 20' 40'
SCALE OF FEET

Know what's below. Call 811 before you dig.

LICENSED PROFESSIONAL ENGINEER KYLE DAVID CHILDERS 68643 CIVIL STATE OF CALIFORNIA
12/20/24

DESIGNED:	SUB SHEET NO.	STRIPING PLAN III	DRAWING NO.
DP, JS	CH3		641
GADD JS, AK			187495
TECH. REVIEW: KK, KB, KC		GOLDEN GATE NATIONAL RECREATION AREA	PMIS/PKG NO. GOGA 244458
DATE: DEC 2024		PRESIDIO OF SAN FRANCISCO | WEST BLUFF	SHEET 24 OF 28

Plotted: Dec 20, 2024 – 3:59pm Joe.Schober G:\PROJECT\32010\32240A\04. CAD\ACAD\GOGA\244458\DRAWINGS\CIVIL\CH1-CH3 STRIPING PLAN.dwg Layout Name: 24

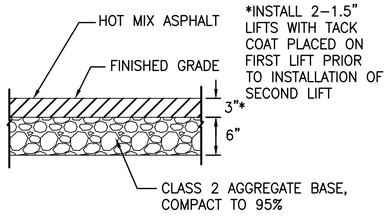

1 D1 TRAIL HMA PAVEMENT
NTS

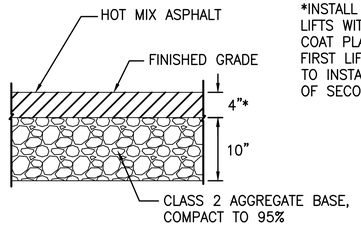

2 D1 VEHICLE HMA PAVEMENT
NTS

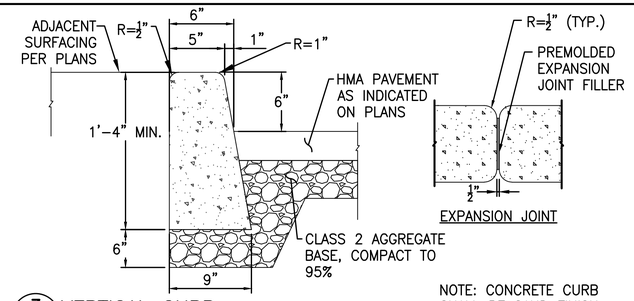

NOTE: CONCRETE CURB SHALL BE SAND FINISH.

3 D1 VERTICAL CURB
NTS

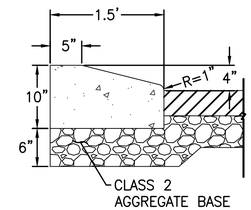

NOTE: CONCRETE CURB SHALL BE SAND FINISH.

4 D1 MOUNTABLE CURB
NTS

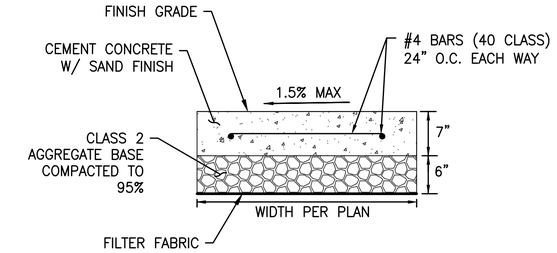

5 D1 CEMENT CONCRETE
NTS

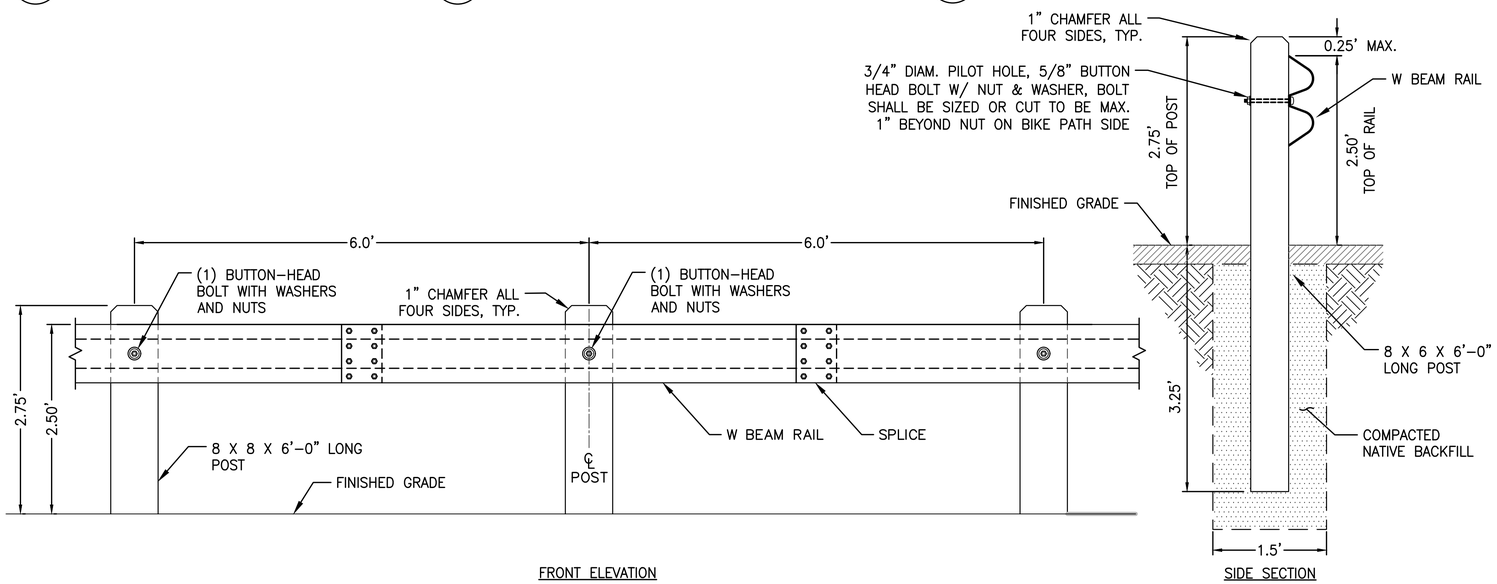

7 D1 STANDARD GUARDRAIL
NTS

NOTES:
1. MINIMUM 28–DAY CONCRETE COMPRESSIVE f'c=4,000 PSI.
2. REBAR: ASTM A615 (Fy=60 KSI)
3. CONCRETE TO HAVE INTEGRAL COLOR PER SPECS.
4. EXPOSED SURFACE FINISH PER SPECS.

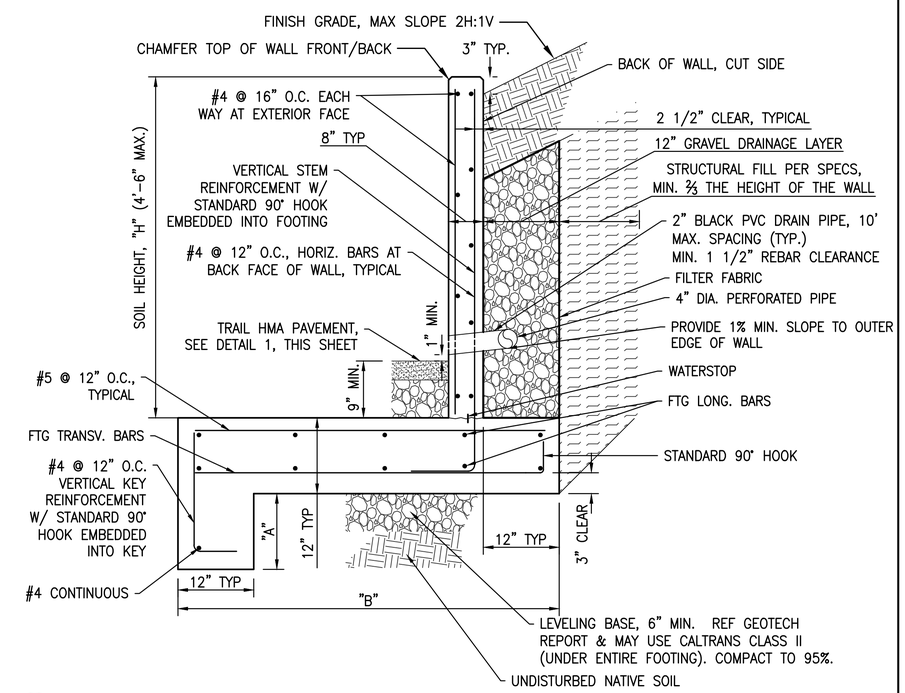

8 D1 TYPICAL RETAINING WALL DETAIL
NTS

WALL SCHEDULE					
H_{MAX}	A	B	FTG. REINF. TRANSV.	FTG. REINF. LONG.	STEM REINF. VERT.
3'–6"	1'–0"	4'–0"	#5 @ 16" O.C.	#4 @ 18" O.C.	#5 @ 16" O.C.
4'–6"	1'–4"	5'–8"	#5 @ 12" O.C.	#4 @ 16" O.C.	#5 @ 12" O.C.

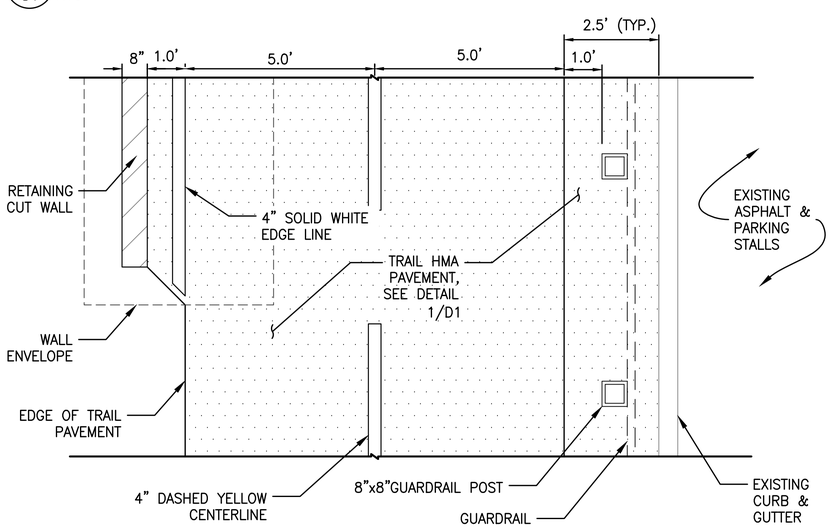

6 D1 TYPICAL BIKE TRAIL SPACING/STRIPING AT WALLS & GUARDRAIL
NTS

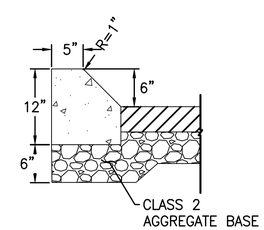

NOTE: CONCRETE CURB SHALL BE SAND FINISH.

9 D1 45 DEGREE MOUNTABLE CURB
NTS

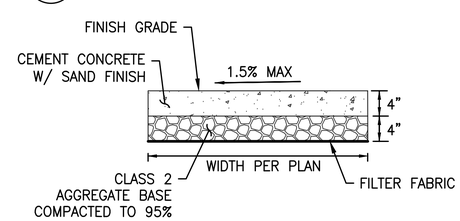

10 D1 CEMENT CONCRETE PAD
NTS

REGISTERED PROFESSIONAL ENGINEER SEAN M. CLARK C 95256 EXP 9/30/25 CIVIL STATE OF CALIFORNIA
12/20/24

LICENSED PROFESSIONAL ENGINEER KALLE DAVID CHLODES 68643 CIVIL STATE OF CALIFORNIA
12/20/24

DESIGNED: DP, JS	SUB SHEET NO.	DETAILS I	DRAWING NO. 641 187495
CADD JS, AK	D1		PMIS/PKG NO. GOGA 244458
TECH. REVIEW: KK, KB, KC		GOLDEN GATE NATIONAL RECREATION AREA PRESIDIO OF SAN FRANCISCO | WEST BLUFF	SHEET 25 OF 28
DATE: DEC 2024			

Plotted: Dec 20, 2024 – 3:59pm Joe.Schober O:\PROJECT\33200\33240W\04 CAD\ACAD\GOGA\244458\DRAWINGS\CIVIL\CX DETL 1.dwg Layout Name: 25

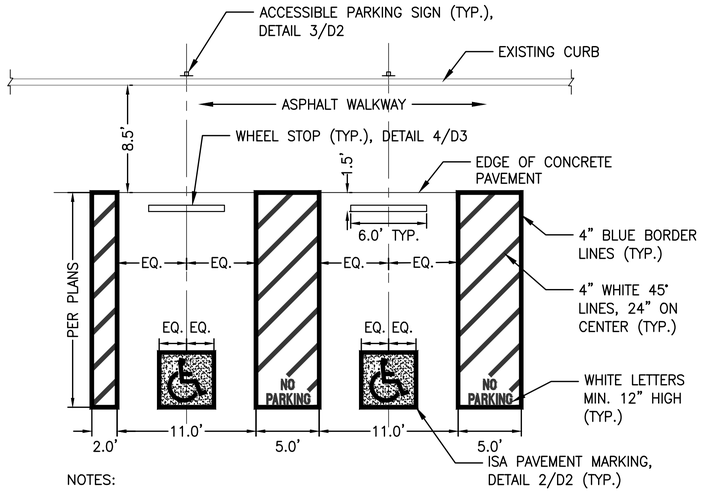

NOTES:

1. SYMBOLS & PARKING STALLS SHALL CONFORM TO THE REQUIREMENTS OF THE UNITED STATES ACCESS BOARD GUIDELINES AND STANDARDS.
2. ALL DIMENSIONS CENTER TO CENTER OF 4" PAVEMENT STRIPING.
3. ALL STRIPING SHALL BE 4" WIDE SOLID WHITE PAVEMENT MARKINGS UNLESS OTHERWISE NOTED.
4. 1.5% MAXIMUM ALLOWABLE SLOPE IN ANY DIRECTION WITHIN ACCESSIBLE PARKING SPACES AND AISLES. CONTRACTOR SHALL CHECK SLOPES WITH A 2' SMART LEVEL ON A 2'x2' GRID TAKEN IN BOTH DIRECTIONS. CONTRACTOR SHALL PROVIDE A RECORD OF THE MEASURED SLOPES TO CO.

1 / D2 90° ACCESSIBLE PARKING STALL LAYOUT
NTS

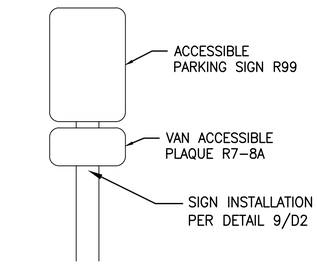

3 / D2 ACCESSIBLE PARKING SIGN
NTS

NOTES:

1. PEDESTRIAN CROSSING SHALL BE SOLID WHITE MARKING.
2. POSITION CROSSING PAVEMENT MARKINGS FROM ROADWAY CENTERLINE SUCH THAT VEHICLE WHEEL PATHS ALIGN WITH GAPS.

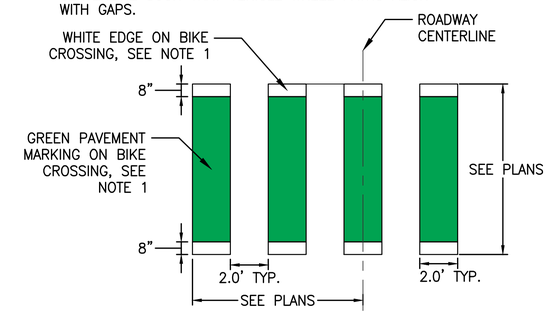

5 / D2 BIKE/PEDESTRIAN CROSSING PAVEMENT MARKING
NTS

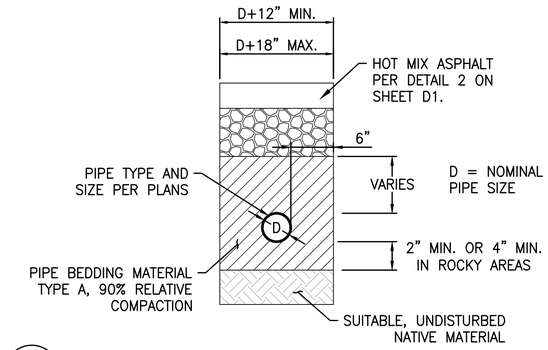

6 / D2 CULVERT TRENCH
NTS

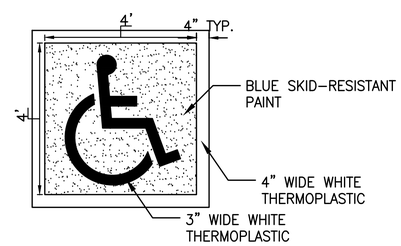

2 / D2 ISA PAVEMENT MARKING
NTS

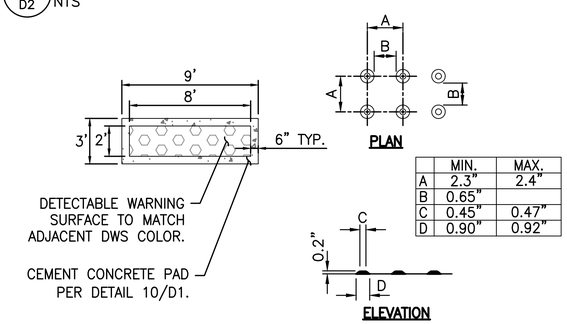

	MIN.	MAX.
A	2.3"	2.4"
B	0.65"	
C	0.45"	0.47"
D	0.90"	0.92"

4 / D2 DETECTABLE WARNING SURFACE
NTS

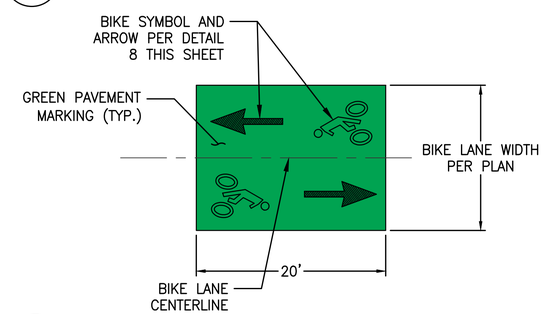

7 / D2 BIKE LANE PAVEMENT MARKING
NTS

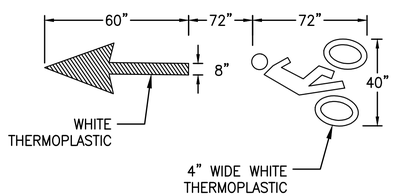

8 / D2 BIKE SYMBOL AND ARROW PAVEMENT MARKING
NTS

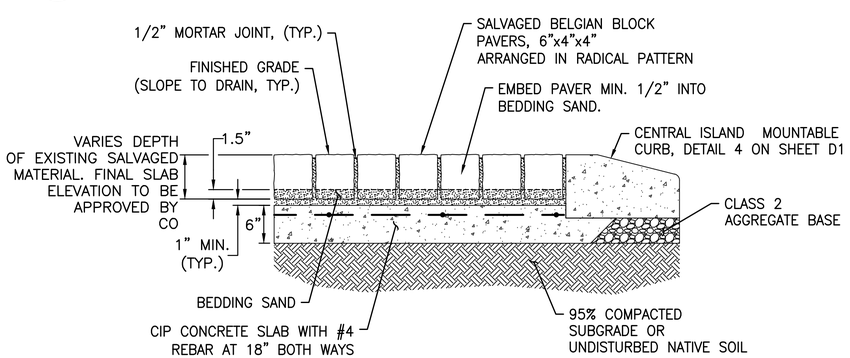

10 / D2 SALVAGED BELGIAN BLOCK PAVERS
NTS

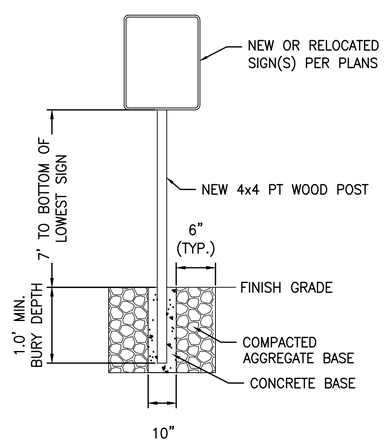

9 / D2 SIGN POST INSTALLATION
NTS

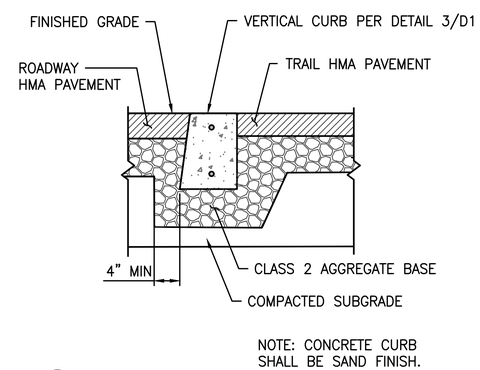

11 / D2 FLUSH CONCRETE CURB
NTS

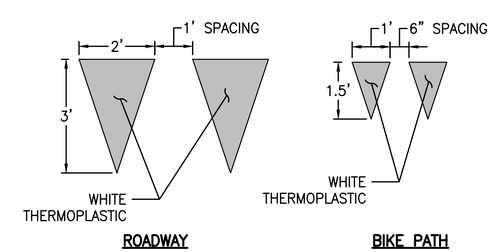

12 / D2 SHARK TEETH YIELD MARKERS
NTS

LICENSED PROFESSIONAL ENGINEER KYLE DAVID CHILDERS 68843 CIVIL STATE OF CALIFORNIA
12/20/24

DESIGNED: DP, JS	SUB SHEET NO. D2	DETAILS II	DRAWING NO. 641 187495
CADD: JS, AK			PMIS/PKG NO. GOGA 244458
TECH. REVIEW: KK, KB, KC		GOLDEN GATE NATIONAL RECREATION AREA PRESIDIO OF SAN FRANCISCO | WEST BLUFF	SHEET 26 OF 28
DATE: DEC 2024			

Plotted: Dec 20, 2024 - 3:59pm Joe.Schober G:\PROJECT\33200\33240M\04 CAD\ACAD\GOGA\244458\DRAWINGS\CIVIL\CX DETL 1.dwg Layout Name: 26

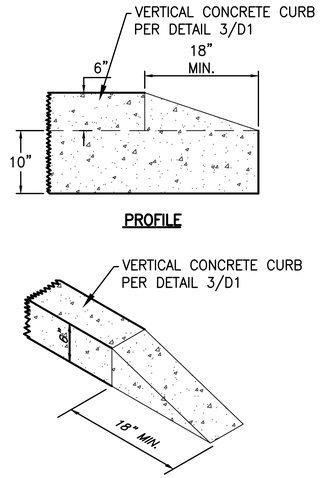

1 D3 VERTICAL CURB TAPER
NTS

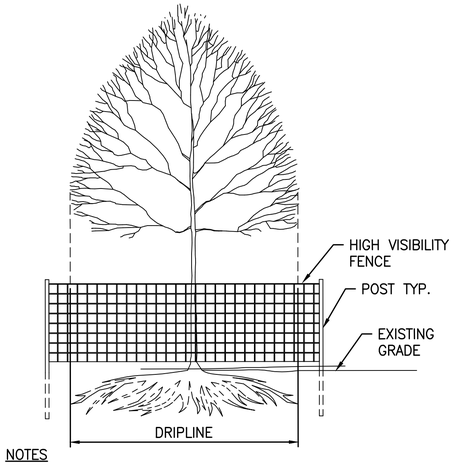

NOTES

1. PROTECTION FENCING SHALL BE PLACED AT CANOPY DRIPLINE.
2. EXISTING ROOT ZONES SHALL BE PROTECTED DURING CONSTRUCTION

2 D3 TREE PROTECTION
NTS

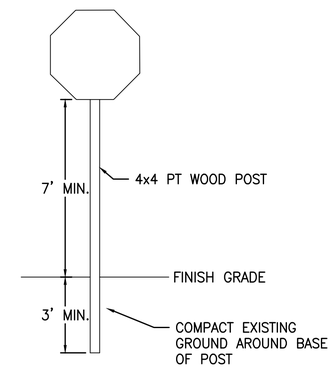

3 D3 STOP SIGN INSTALLATION
NTS

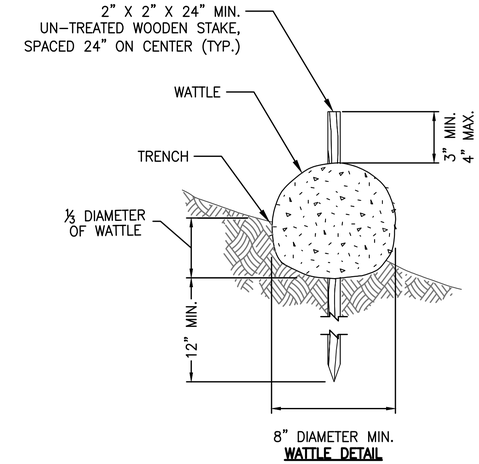

WATTLE NOTES:

1. SECURELY KNOT EACH END OF WATTLE. OVERLAP ADJACENT WATTLE ENDS 12" BEHIND ONE ANOTHER AND SECURELY TIE TOGETHER.
2. ANGLE TERMINAL ENDS UPHILL 24" TO 48" TO PREVENT FLOW AROUND WATTLES.
3. COMPACT EXCAVATED SOIL AND TRENCHES TO PREVENT UNDERCUTTING. ADDITIONAL STAKING MAY BE NECESSARY TO PREVENT UNDERCUTTING.
4. INSTALL WATTLE PERPENDICULAR TO FLOW ALONG CONTOURS.
5. WATTLES SHALL BE INSPECTED REGULARLY, AND IMMEDIATELY AFTER A RAINFALL PRODUCES RUNOFF, TO ENSURE THEY REMAIN THOROUGHLY ENTRENCHED AND IN CONTACT WITH THE SOIL

WATTLE SPACING ON SLOPES	
8" – 10" OR 10" – 12" DIAM.	
SLOPE	MAX. SPACING
1H : 1V	5' – 0"
2H : 1V	10' – 0"
3H : 1V	15' – 0"
4H : 1V	20' – 0"

5 D3 WATTLE
NTS

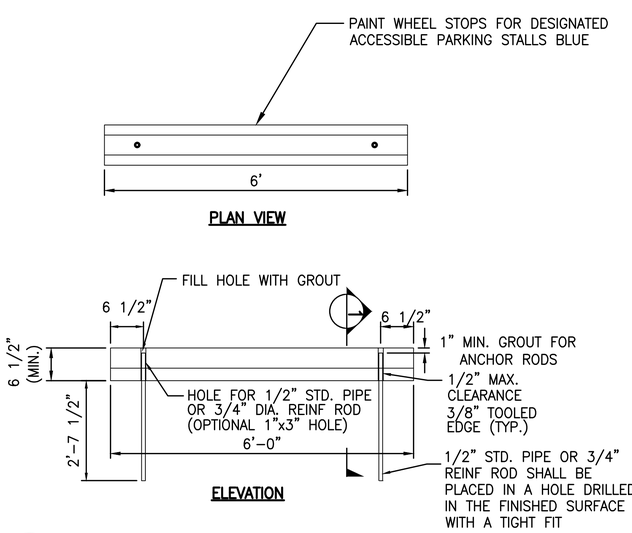

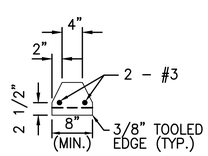

1 SECTION

4 D3 PRECAST CONCRETE WHEEL STOP
NTS

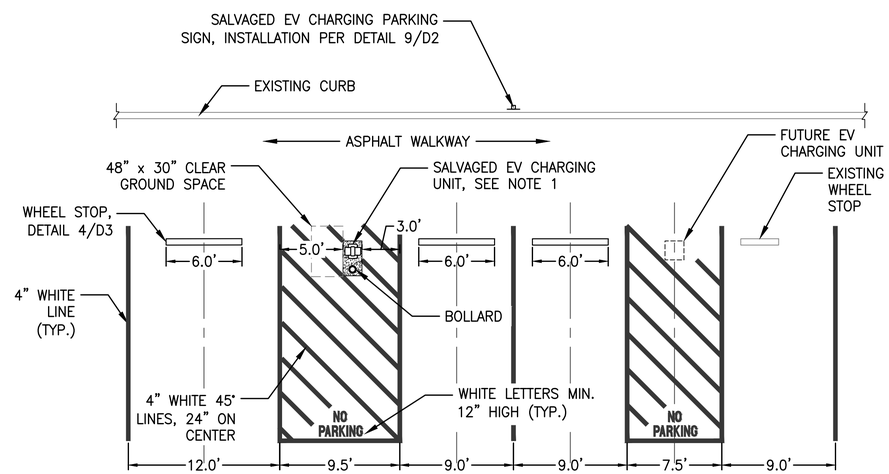

NOTES:
1. CONTRACTOR SHALL COORDINATE WITH RIVIAN FOR REINSTALLATION OF CHARGING UNIT AND PEDESTAL.

6 D3 EV CHARGING STATION & PARKING STALL RELOCATION
NTS

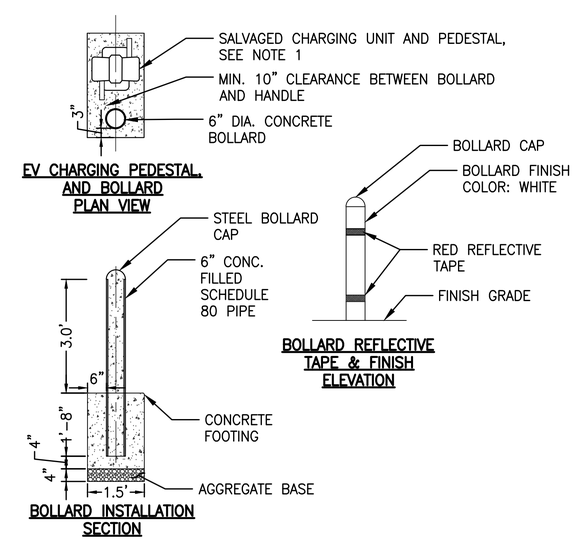

LICENSED PROFESSIONAL ENGINEER
KYLE DAVID CALDERS
C 68643
CIVIL
STATE OF CALIFORNIA
12/20/24

DESIGNED: DP, JS	SUB SHEET NO.	DETAILS III	DRAWING NO. 641 187495
DADD JS, AK	D3		PMIS/PKG NO. GOGA 244458
TECH. REVIEW: KK, KB, KC		GOLDEN GATE NATIONAL RECREATION AREA	SHEET
DATE: DEC 2024		PRESIDIO OF SAN FRANCISCO | WEST BLUFF	27 OF 28

Plotted: Dec 20, 2024 – 4:00pm Joe.Schober O:\PROJECT\33200\33240\04 CAD\ACAD\GOGA\244458\DRAWINGS\CIVIL\CV DETL 1.dwg Layout Name: 27

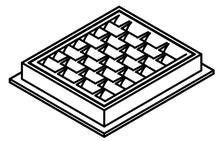

FRAME AND VANED GRATE

PIPE ALLOWANCES	
PIPE MATERIAL	MAXIMUM INSIDE DIAMETER (INCHES)
REINFORCED OR PLAIN CONCRETE	12"
ALL METAL PIPE	15"
CPSSP*	12"
SOLID WALL PVC	15"
PROFILE WALL PVC	15"

*CORRUGATED POLYETHYLENE STORM SEWER PIPE

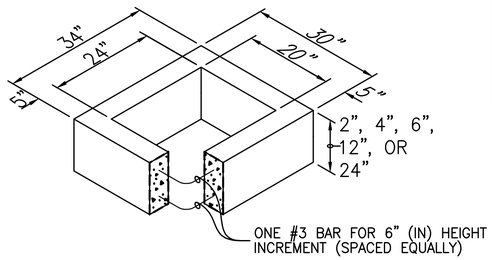

RECTANGULAR ADJUSTMENT SECTION

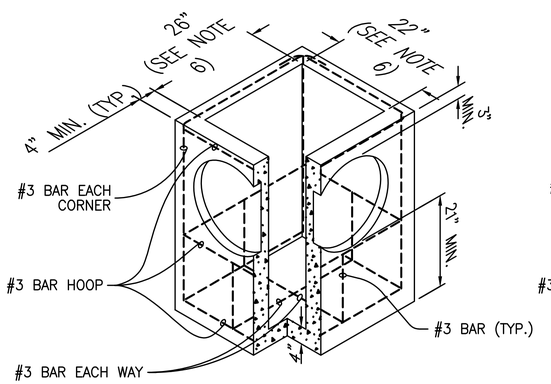

PRECAST BASE SECTION

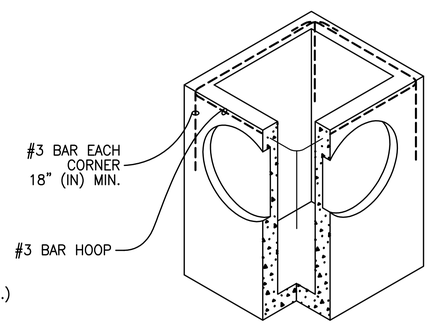

(SEE NOTE 1)
ALTERNATIVE PRECAST BASE SECTION

NOTES:

1. AS ACCEPTABLE ALTERNATIVES TO THE REBAR SHOWN IN THE PRECAST BASE SECTIN, FIBERS (PLACED ACCORDING TO THE STANDARD SPECIFICATIONS), OR WIRE MESH HAVING A MINIMUM AREA OF 0.12 SQUARE INCHES PER FOOT SHALL BE USED WITH THE MINIMUM REQUIRED REBAR SHOWN IN THE ALTERNATIVE PRECAST BASE SECTION.WIRE MESH SHALL NOT BE PLACED IN THE KNOCKOUTS.
2. THE KNOCKOUT DIAMETER SHALL NOT BE GREATER THAN 20" (IN). KNOCKOUTS SHALL HAVE A WALL THICKNESS OF 2" (IN) MINIMUM TO 2.5" (IN) MAXIMUM. PROVIDE A 1.5" (IN) MINIMUM GAP BETWEEN THE KNOCKOUT WALL AND THE OUTSIDE OF THE PIPE. AFTER THE PIPE IS INSTALLED, FILL THE GAP WITH JOINT MORTAR IN ACCORDANCE WITH STANDARD SPECIFICATION SECTION 9-04.3.
3. THE MAXIMUM DEPTH FROM THE FINISHED GRADE TO THE LOWEST PIPE INVERT SHALL BE 5' (FT).
4. THE FRAME AND GRATE MAY BE INSTALLED WITH THE FLANGE DOWN, OR INTEGRALLY CAST INTO THE ADJUSTMENT SECTION WITH FLANGE UP.
5. THE PRECAST BASE SECTION MAY HAVE A ROUNDED FLOOR, AND THE WALLS MAY BE SLOPED AT A RATE OF 1 : 24 OR STEEPER.
6. THE OPENING SHALL BE MEASURED AT THE TOP OF THE PRECAST BASE SECTION.
7. ALL PICKUP HOLES SHALL BE GROUTED FULL AFTER THE BASIN HAS BEEN PLACED.

1/D4 CATCH BASIN
NTS

NOTES:

1. ANY EXCAVATION LEFT OPEN SHOULD BE SECURELY FENCED OFF.
2. ANY PAVEMENT DAMAGE DURING CONSTRUCTION SHALL BE REPAIRED OR REPLACED BY THE CONTRACTOR TO PRE-CONSTRUCTION CONDITIONS OR BETTER.
3. VERIFY ROUTING SHOWN ON UTILITY PLAN SHEET C6 WITH CO PRIOR TO INSTALLATION.
4. CONDUITS UNDER DRIVES AND PARKING LOTS SHALL BE PVC SCHEDULE 80.
5. CONTRACTOR IS RESPONSIBLE TO CALL AN UNDERGROUND LOCATING COMPANY TO MARK ALL EXISTING UNDERGROUND UTILITIES.
6. 1" MIN. SEPARATION BETWEEN CONDUIT.

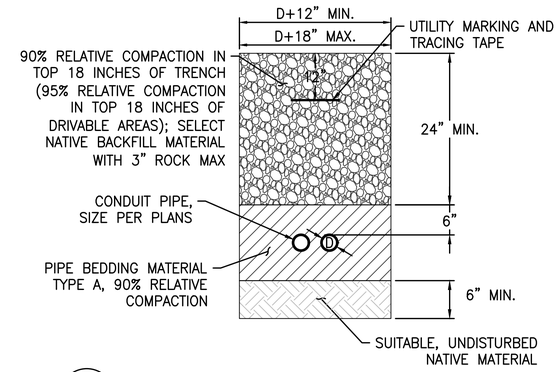

2/D4 CONDUIT TRENCH
NTS

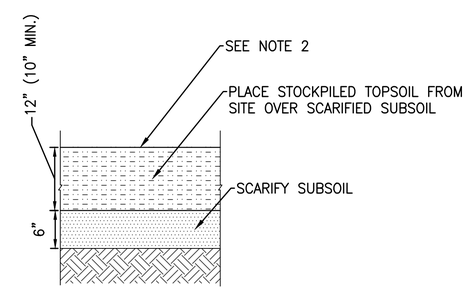

3/D4 SOIL PREP – TOPSOIL REPLACEMENT
NTS

TOPSOIL REPLACEMENT NOTES:

1. PRIOR TO PLACING STOCKPILED TOPSOIL, SCARIFY SUBSOIL TO DEPTH SHOWN IN THE DETAIL EXCEPT WHERE UTILITIES OR EXISTING ROCK LIMIT THE DEPTH OF SCARIFICATION, AND WITHIN THE ROOT ZONES OF EXISTING TREES.
2. TOPSOIL PROTECTION: PLACE WATTLES ON SLOPES IN ACCORDANCE WITH DETAIL 5/D3 AND SPECS.

LICENSED PROFESSIONAL ENGINEER KYLE DAVID CHILDERS 68643 CIVIL STATE OF CALIFORNIA
12/20/24

DESIGNED: DP, JS	SUB SHEET NO.	DETAILS IV	DRAWING NO. 641 187495
CADD JS, AK	D4		PMIS/PKG NO. GOGA 244458
TECH. REVIEW: KK, KB, KC		GOLDEN GATE NATIONAL RECREATION AREA PRESIDIO OF SAN FRANCISCO | WEST BLUFF	SHEET 28 OF 28
DATE: DEC 2024			

Plotted: Dec 20, 2024 – 4:03pm Joe.Schober O:\PROJECT\32000\32240M\04 CAD\ACAD\GOGA\244458\DRAWINGS\CIVIL\CX DETL 1.dwg Layout Name: 28