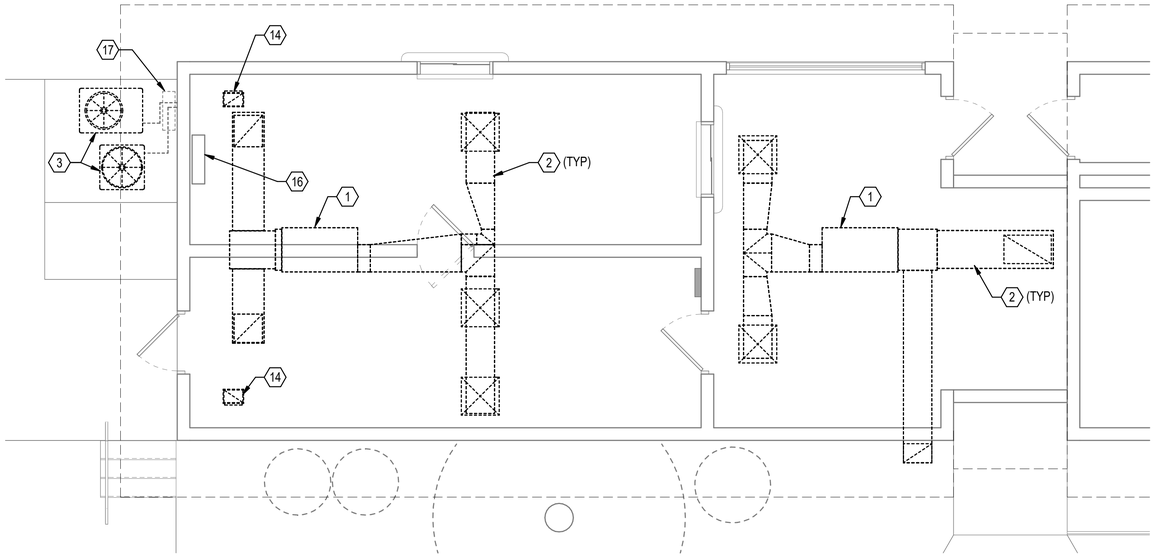

C1 MECHANICAL FLOOR PLAN - DEMOLITION

SCALE: 1/4" = 1'-0"

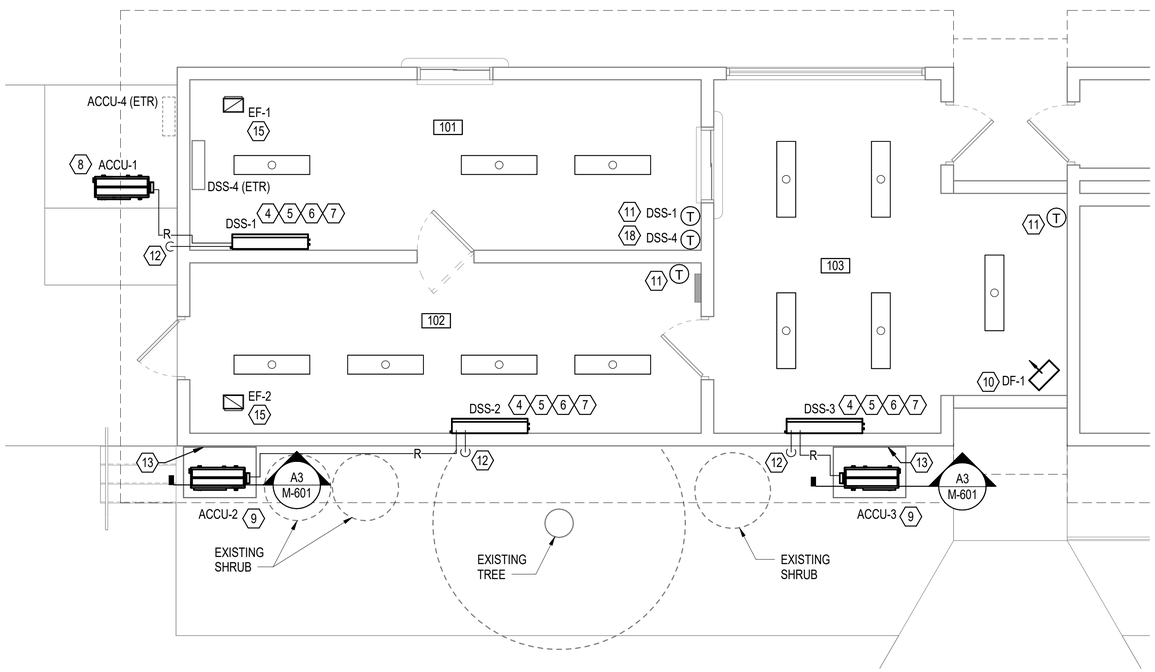

A1 MECHANICAL FLOOR PLAN - NEW WORK

SCALE: 1/4" = 1'-0"

GENERAL SHEET NOTES

A. _

SYM	DESCRIPTION	DATE	APPR

KEYNOTES

1. DEMOLISH FCU AND ASSOCIATED REFRIGERANT PIPING, COMPLETE.
2. DEMOLISH DUCTWORK AND AIR DEVICES, COMPLETE.
3. DEMOLISH CONDENSING UNITS AND ALL ASSOCIATED REFRIGERANT PIPING, COMPLETE. SEAL ALL EXTERIOR WALL PENETRATIONS WATERTIGHT AFTER REMOVAL.
4. DUCTLESS SPLIT SYSTEM.
5. PROVIDE CONDENSATE DRAIN. ROUTE OUTSIDE AND SPILL ON GRADE IN A SUITABLE LOCATION.
6. SEAL ALL EXTERIOR WALL PENETRATIONS WATERTIGHT AFTER INSTALLATION.
7. ENCLOSE EXTERIOR WIRING, REFRIGERANT AND CONDENSATE DRAIN PIPING IN PREFABRICATED PVC DUCT AND FITTING SYSTEM. SYSTEM SHALL BE SPECIFICALLY DESIGNED TO CONCEAL AND PROTECT EXPOSED WIRING, REFRIGERANT AND CONDENSATE DRAIN PIPING. PROVIDE ALL COUPLERS, END FITTINGS, ELBOWS, WALL INLET COVER AND ALL OTHER COMPONENTS FOR A COMPLETE SYSTEM. SUPPORT DUCT SYSTEM FROM WALL IN ACCORDANCE WITH MANUFACTURER'S INSTRUCTIONS. PVC DUCT SYSTEM COLOR SELECTION BY ARCHITECT.
8. AIR COOLED CONDENSING UNIT. LOCATE ON EXISTING CONCRETE PAD.
9. AIR COOLED CONDENSING UNIT. LOCATE ON CONCRETE PAD. SIZE CONCRETE PAD FOR EQUIPMENT SELECTED AND TO MAINTAIN MANUFACTURER'S EQUIPMENT CLEARANCES. EXTEND PAD TO EXTERIOR WALL OF BUILDING. DO NOT DISTURB EXISTING VEGETATION.
10. DIRECTIONAL FAN. SEE SCHEDULE. COORDINATE LOCATION WITH ACTIVITY.
11. ROOM TEMPERATURE SENSOR/CONTROLLER. WIRING MUST BE ENCLOSED IN 3/4" SURFACE-MOUNTED EMT CONDUIT.
12. PROVIDE SPLASH BLOCK. SPILL ON TO SPLASH BLOCK ON GRADE.
13. PROVIDE 1/2" WIDE PREMOLDED JOINT FILLER FULL DEPTH BETWEEN CONCRETE AND EXISTING CMU WALL. PREMOLDED JOINT FILLER MUST CONFORM TO ASTM D1751.
14. DEMOLISH EXHAUST FAN, COMPLETE.
15. EXHAUST FAN PER SCHEDULE ON M-601.
16. EXISTING WALL MOUNTED DSS-4 TO REMAIN.
17. EXISTING WALL MOUNTED ACCU-4 TO REMAIN.
18. ROOM TEMPERATURE SENSOR/CONTROLLER. TIE INTO EXISTING DSS-4 (MRCOOL A-18-HP-WMAH-230D-0). USE MANUFACTURER'S APPROVED SENSOR/CONTROLLER. FOLLOW MANUFACTURER'S INSTRUCTIONS. WIRING MUST BE ENCLOSED IN 3/4" SURFACE-MOUNTED EMT CONDUIT.

LEGEND

SYMBOL	DESCRIPTION
—R—	REFRIGERANT LIQUID & SUCTION PIPING
	PIPE TURNING DOWN

KEY PLAN

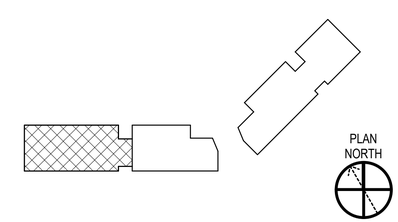

GRAPHIC SCALE(S)

1/4" = 1' - 0" 0 1' 5' 10' 15'

SEAL

A/E INFO

APPROVED

FOR COMMANDER NAVFAC

ACTIVITY

FELIX A. PESSIG, RBH

SATISFACTORY TO DATE 6/30/2025

DES	KS	DRW	JS	CHK	SDM

PM/DM	SDM/KS
BRANCH MANAGER	SDM
CHIEF ENG/ARCH	HSDC
FIRE PROTECTION	

DEPARTMENT OF THE NAVY
NAVAL FACILITIES ENGINEERING SYSTEMS COMMAND
MID-LANT PWD OCEANA

NAVAL FACILITIES ENGINEERING SYSTEMS COMMAND – MID-ATLANTIC
NAS OCEANA - VIRGINIA BEACH, VA

NAVAL AIR STATION OCEANA
VIRGINIA BEACH, VIRGINIA

REPLACE HVAC UNITS
BUILDING 582

MECHANICAL FLOOR PLANS

SCALE: AS NOTED

EPROJECT NO.: 1848813

CONSTR. CONTR. NO.

NAVFAC DRAWING NO.
12932221

SHEET 2 OF 6

M-101

DRAWFORM REVISION: 25 AUGUST 2020

6/11/2026 8:16:31 AM M-101
C:\Revit Local Files\OC582-1848813-R25_johan.stadler.rvt