DEFENSE LOGISTICS AGENCY
AVIATION AT OKLAHOMA CITY
3001 STAFF DRIVE SUITE 2AG1 109B
TINKER AIR FORCE BASE, OKLAHOMA 73145-3015

17 June 2026

MEMORANDUM FOR: GE Aviation
ATTN: Kelly Boshold

FROM: DLA Aviation - AOAB
3001 Staff Dr., 2B95
Tinker AFB, OK 73145

SUBJECT: Letter Solicitation SPRTA1-26-R-0202

This solicitation is issued for the purpose of acquiring requirements for purchase request FD2030-26-00074 and is currently sole source to General Electric Company (CAGE Code 99207). Please provide pricing and delivery for purchase of this NSN in accordance with the terms and conditions of Commercial BOA: SPE4A1-22-G-0010. The requested supplies is as follows:

Line Item	P/N	NSN	Noun	Qty Range	BEQ
0001	5126T28G11	2840-01-630-9064 OK	ROTOR,COMPRESSOR,AI	125-748	488

Inspection: Origin
Acceptance: Origin
Inspection/Acceptance Report: Receiving Report Required
Quality Assurance: Higher Level Contract Quality
Buy American Act/balance of Payments Program
Requested Delivery: On or Before 31 Oct 2028

Ship to:
SW3211
Tinker AFB

The following clauses are applicable:
DFARS 252.211-7003 – Item Unique Identification & Valuation (Bag/Tag)
DFARS 252.209-7010 - Critical Safety Items
FAR 52.219-9 – Small Business Subcontracting Plan

Please provide a Firm Fixed Price proposal by 20 July 2026 at 4:00 PM Central Time. If you have any further questions, please contact Breann Irving 385-591-1658 or breann.irving@us.af.mil.

Sincerely,
//SIGNED//
Breann Irving
Contracting Officer

Attachments:
1) Transportation Report, Form: DD 1653, 1 page
2) Packaging Report, Form 158, 1 page.
3) Special Packaging Instructions (SPI), 6 pages

TRANSPORTATION DATA FOR SOLICITATIONS

PURCHASE INSTRUMENT NUMBER: FD20302600074-00	**DATE INITIATED:** 05 NOV 2025
COMMODITY: See Continuation	**STOCK NUMBER:** See Continuation

F.O.B. TERMS RECOMMENDED AS BEST SUITED FOR THIS PROCUREMENT

[X] ORIGIN [ ] DESTINATION [ ] OTHER *(Specify)* [ ] DATA / FIRST ARTICLE F.O.B. DESTINATION

TRANSPORTATION PROVISIONS / CLAUSES	FAR CITATION
F.O.B. Origin	52.247-29
Freight Classification Description	52.247-53
Marking of Shipments	47.305-10
Contact DCMA Transportation Contact DCMA Transportation on ALL "DCMA Administered" contracts prior to shipment for shipping instructions using the DCMA Shipment Instruction Request (SIR) eTool System, at http://www.dcma.mil <http://www.dcma.mil/> for ALL FOB: Origin, Foreign Military Sales (FMS), and FOB: Destination OCONUS/Export movements to obtain the appropriate DOD regulatory clearances, shipping documentation and instructions from your cognizant DCMA Transportation Office. If you are new to DCMA, and do not already have a SIR eTool account, you will first need to request an account via DCMA External Web Access Management (EWAM) application which can be accessed at http://www.dcma.mil. If you need additional assistance, email DCMA Transportation Group at: Transportation.Division@dcma.mil. Do not move any freight to a water or aerial port prior to contacting DCMA or it will become frustrated. Failure to contact the responsible DCMA may result in vendor incurring additional expenditures.	Vendor Transportation Instructions

TACRN:

AAA

TRANSPORTATION FUNDS INFORMATION:

Purchase Instrument Line LOA: 97X4930.FC04 646 47GT 15E04C 01N000 00000 000000 503000 F03000 FSR: 013352 PSR: K42931

First Destination Transportation Account Code: FRS2

Miscellaneous Obligation / Reimbursement Document:

Second Destination Transportation Account Code:

FMS LOA:

Additional Funding Information:

ITEM / SHIP TO(s):

NSN / Pseudo NSN: 2840016309064OK

Purchase Instrument Line Item Number: 0001

Ship to (DoDAAC / MAPAC): SW3211

Mark For: 09

Ship To (Address): DLA DISTRIBUTION DEPOT OKLAHOMA
3301 F AVE CEN REC BLDG 506 DR 22
TINKER AFB OK 73145-8000
73145 - 8000
USA

WPOD:

APOD:

BBP / CCP:

RIC: 1

Ship To (Remarks):

Requisition Number:

Supplemental Address:

FMS Case:

EVALUATION OF PORT BID OR PROPOSAL:

SOLICITATION DATA NOTES:

OTHER TRANSPORTATION DATA:

NAME	ORGANIZATION / OFFICE SYMBOL	COMMERCIAL / DSN PHONE	SIGNATURE	DATE
Carter, Glenn A	406 SCMS / GULAA	478-327-7399 / 497-7399	//SIGNED//Carter, Glenn A	05 NOV 2025

PACKAGING REQUIREMENTS

PURCHASE INSTRUMENT NUMBER: FD20302600074-00	**VERSION:** 3
MIL-STD 129 REVISION: R	**MIL-STD 2073-1 REVISION:** E

THE FOLLOWING STATEMENT IS IN COMPLIANCE WITH THE UNITED NATIONS-IMPLEMENTED RESTRICTIONS ON WOOD PACKAGING MATERIAL (WPM). THIS REQUIREMENT IS SPECIFICALLY CONCERNED WITH INVASIVE SPECIES SUCH AS THE PINEWOOD NEMATODE. WPM IS DEFINED AS WOOD PALLETS, SKIDS, LOAD BOARDS, PALLET COLLARS, WOODEN BOXES, REELS, DUNNAGE, CRATES, FRAMES, AND CLEATS. THE STATEMENT BELOW CITES THE REQUIREMENTS IN DETAIL AND COVERS LUMBER FOR BUILDING CONTAINERS AND PALLETS USED FOR DELIVERIES RESULTING IN SHIPMENTS WORLDWIDE (DIRECT, OR THROUGH AIR LOGISTICS CENTERS (ALC), CONTAINER CONSOLIDATION POINTS (CCP), OR OTHER BASES). WOODEN LUMBER, WOODEN PALLET AND PACKAGING/CONTAINER STATEMENT:
ALL WOODEN LUMBER, WOODEN PALLET'S, AND WOODEN CONTAINERS PRODUCED ENTIRELY OR IN PART OF WOOD PACKING MATERIAL (WPM) SHALL BE CONSTRUCTED FROM DEBARKED WOOD IN ADDITION TO THE APPLICATION OF HEAT-TREATED (HT) MATERIAL (HT TO 56 DEGREES CENTIGRADE OR 133 DEGREES FAHRENHEIT FOR 30 MINUTES). CERTIFICATION/MARKING IS REQUIRED BY AN ACCREDITED AGENCY RECOGNIZED BY THE AMERICAN LUMBER STANDARDS COMMITTEE (ALSC). FOR REFERENCE DOCUMENTATION, SEE LATEST REVISION OF "INTERNATIONAL STANDARDS FOR PHYTOSANITARY MEASURES" (ISPM)NO.15), "REGULATION OF WOOD PACKAGING MATERIAL IN INTERNATIONAL TRADE."

PACRN:	PACKAGING REQUIREMENT:	PRESERVATION LEVEL:	PACKAGING LEVEL:	SPI:	SPI REV:	SPI DATE:
AAA	MIL-STD-2073-1 / SPI	MIL	B	F000653579	B	08035 - 04 FEB 2008

ITEM(S):

2840016309064OK

CODED DATA:

QUP	ICQ	PRES METH	CD	PRES MTL	WRAP MTL	CUSH DUNN	CT	UNIT CONT	INT CONT	UCL	SPEC MKG	UNIT PACK WEIGHT	UNIT PACK LENGTH	UNIT PACK WIDTH	UNIT PACK DEPTH	UNIT PACK CUBE	OPI

ADDITIONAL PACKAGING AND CONTAINER MARKING REQUIREMENTS:

SUPPLEMENTAL PACKAGING INSTRUCTION TEXT:

VENDOR PACKAGING INSTRUCTIONS:

Military Packaging and Marking
Items shall be packaged in accordance with MIL-STD-2073-1, Standard Practice for Military Packaging. Shipping and storage markings shall be in accordance with MIL-STD-129, Standard Practice for Military Marking.

Shipping Container Marking
Shipping containers shall be marked meeting the following criteria: (a) MIL-STD-129, Standard Practice for Military Marking. (b) Additional marking and/or bar coding requirements exceeding those of MIL-STD-129 (e.g., unit serial numbers, original equipment manufacturers (OEM) name, or OEM model number, as specified on the AFMC Form 158.

ORGANIZATION / OFFICE SYMBOL:	PACKAGING SPECIALIST:	PHONE NUMBER:	SIGNATURE:	DATE:
406 SCMS / GULAA	Real, Billy S	405-582-9721 / 852-9721	//SIGNED//Real, Billy S	25309 - 05 NOV 2025

SPECIAL PACKAGING INSTRUCTION

CODE ID	SPI NO (TPO)
98748	F 00-065-3579
	SHEET 1 OF 6

PART OR DRAWING NO.	NATIONAL STOCK NO.	CURR REV
6041T62G34	2840-01-254-3179 OK	B

ITEM NOMENCLATURE
ROTOR, COMPRESSOR

ORIG DATE 81195

ILL P. BROWNING
PS C. TROTTER
CHK T.C. JONES
ENGR M. HEADLEE
AUTH J. PATLAN

PRESERVATION IAW MIL-STD-2073
METHOD 20

QUP 001

ICQ 000

CLEANING 1

DRYING IAW MIL-STD-2073

PRESERVATIVE MIL-PRF-16173
ON CRITICAL SURFACES

MARKING IAW MIL-STD-129

CLOSURE ASTM-D-6251

PACKING AS SPECIFIED BELOW AND BILL OF MATERIALS

LEVEL	SPEC	STYLE	TYPE	CL	VRTY	GR	TR
A	ASTM-D-6251	A	III	2	N/A	N/A	B
B	ASTM-D-6251	A	III	1	N/A	N/A	A

	LEVEL A	LEVEL B
GROSS CU FT		8.49
GROSS WT LBS	170	170
DESIGN FRAGILITY G	N/A	N/A

	LENGTH	WIDTH	DEPTH
CNTNR I.D.	19	19	28 1/2
CNTNR O.D.	21 1/8	21 1/8	32 7/8
ITEM DIM	15.78	15.78	27
ITEM WT LBS	70		

SPECIAL MARKINGS:
A) SPI NO. F 00-065-3579
B) REUSABLE CONTAINER AND DUNNAGE DO NOT DESTROY.
C) NOT FOR OUTSIDE STORAGE.

LTR	DESCRIPTION	DATE	ILL	APRVD
A	REDRAWN	81195		M.S.
B	REVISED CONTAINER & UPDATE SPECIFICATIONS	08035	PLB	C.E.T.

PART NO.	QTY.	NOMENCLATURE OR DESCRIPTION	SIZE (INCHES UNLESS SPEC)	MATERIAL SPECIFICATION
1		CONTAINER I.D.	19 X 19 X 28 1/2	SEE LEVEL OF PACK
2	2	SKID	21 1/8 X 3 1/2 X 3/4	ASTM-D-6199
3	2	RUBBING STRIPS	21 1/8 X 3 1/2 X 1 1/2	ASTM-D-6199
4	6	BOTTOM PAD SUPPORTS	17 3/8 X 2 X 1	ASTM-D-6199
5	1	BOTTOM PAD BASE	18 7/8 X 18 7/8 X 1/2	A-A-55057
6	1	BOTTOM PAD COLLAR	6 X 6 X 3/4	A-A-55057
7	A/R	CUSHION	AS REQUIRED X 1/4	A-A-59135
8	1	INSERT	74 1/8 X 13 1/8 X 9/16	ASTM-D-4727
9	1	TOP PAD	18 7/8 X 18 7/8 X 1/2	A-A-55057
10	1	TOP PAD COLLAR	6 X 6 X 1 1/2	A-A-55057
11	2	BOLT W/WASHER, LOCK WASHER & NUT	5/16 X 3	ASME-B18.9
12	1	MIDDLE PAD	18 7/8 X 18 7/8 X 1/2	A-A-55057
13	1	WRAP	AS REQUIRED	MIL-PRF-121

SPI NO. F 00-065-3579

SPECIAL PACKAGING INSTRUCTION	CODE ID 98748	SPI NO (TPO) F 00-065-3579
ITEM NOMENCLATURE ROTOR, COMPRESSOR		SHEET 2 OF 6

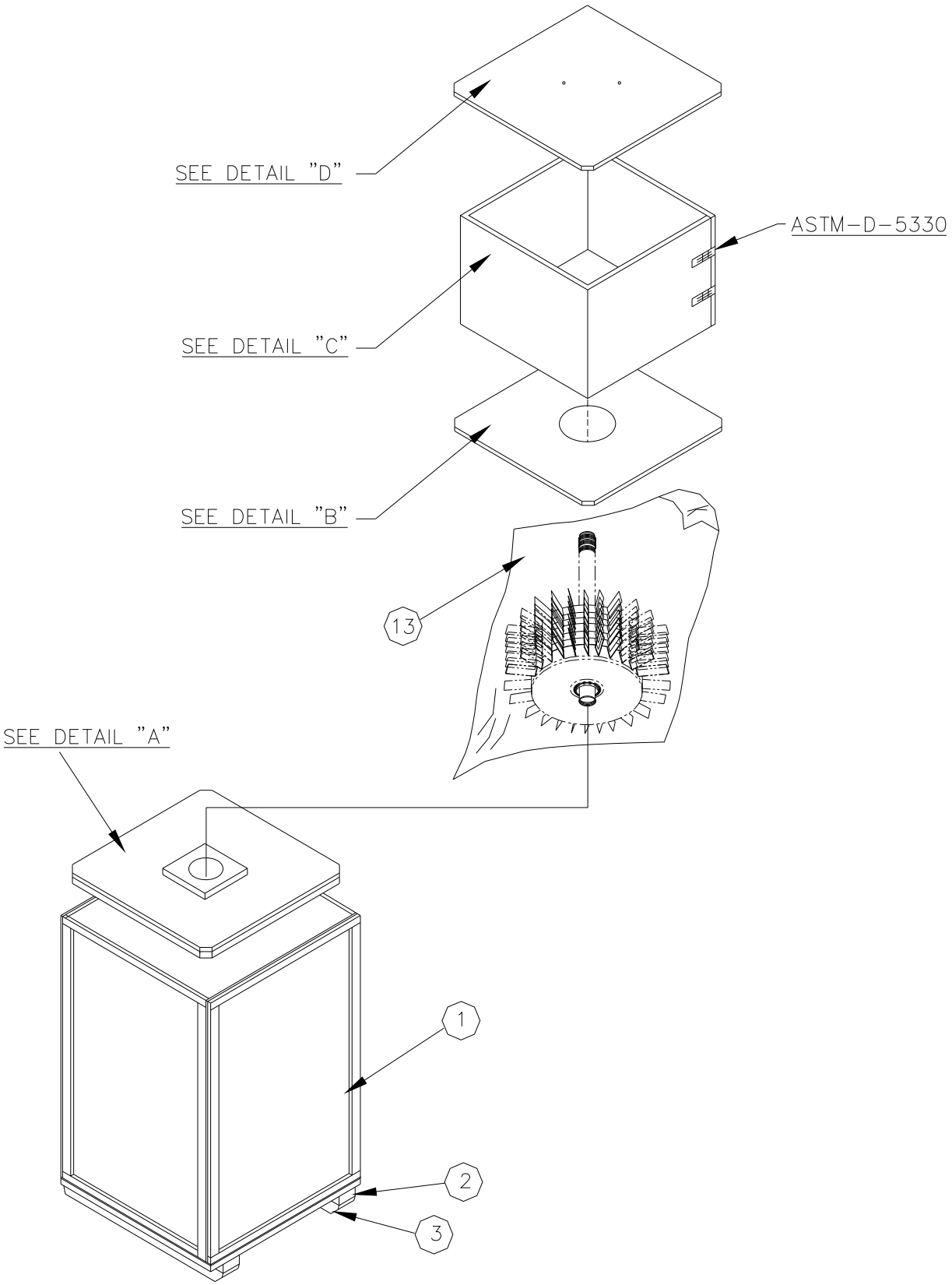

DD form MAR 87 2169 MOD

COMPUTER GENERATED

SPECIAL PACKAGING INSTRUCTION	CODE ID 98748	SPI NO (TPO) F 00-065-3579
ITEM NOMENCLATURE ROTOR, COMPRESSOR		SHEET 3 OF 6

DETAIL "A"

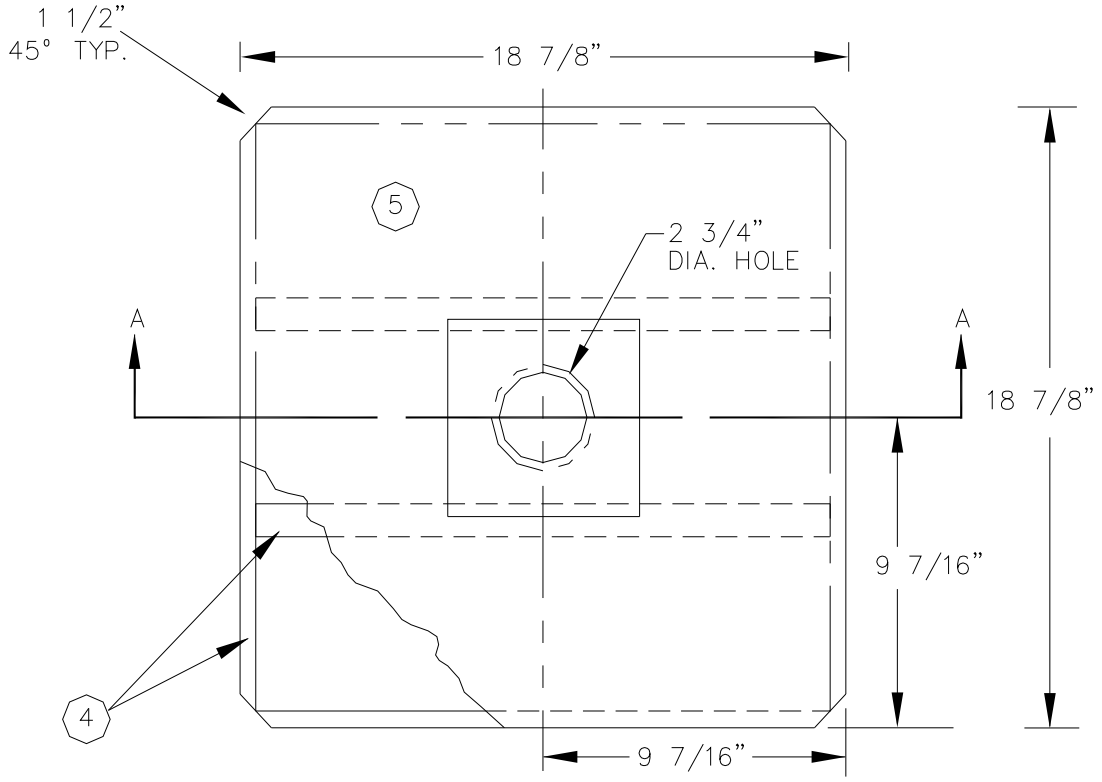

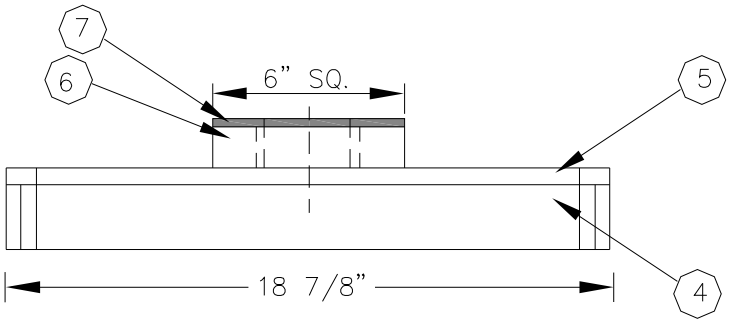

VIEW "AA"

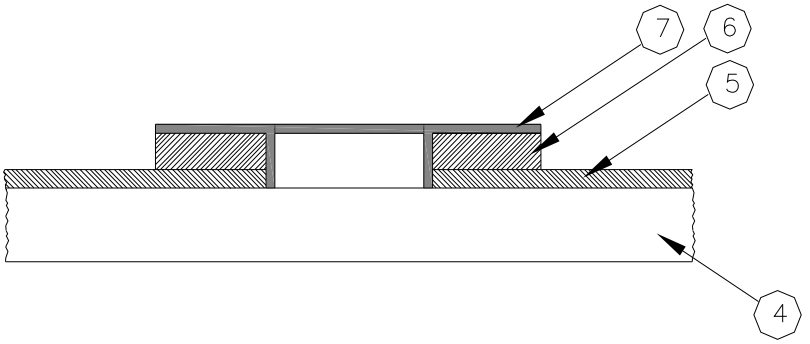

SPECIAL PACKAGING INSTRUCTION	CODE ID 98748	SPI NO (TPO) F 00-065-3579
ITEM NOMENCLATURE ROTOR, COMPRESSOR		SHEET 4 OF 6

DETAIL "B"

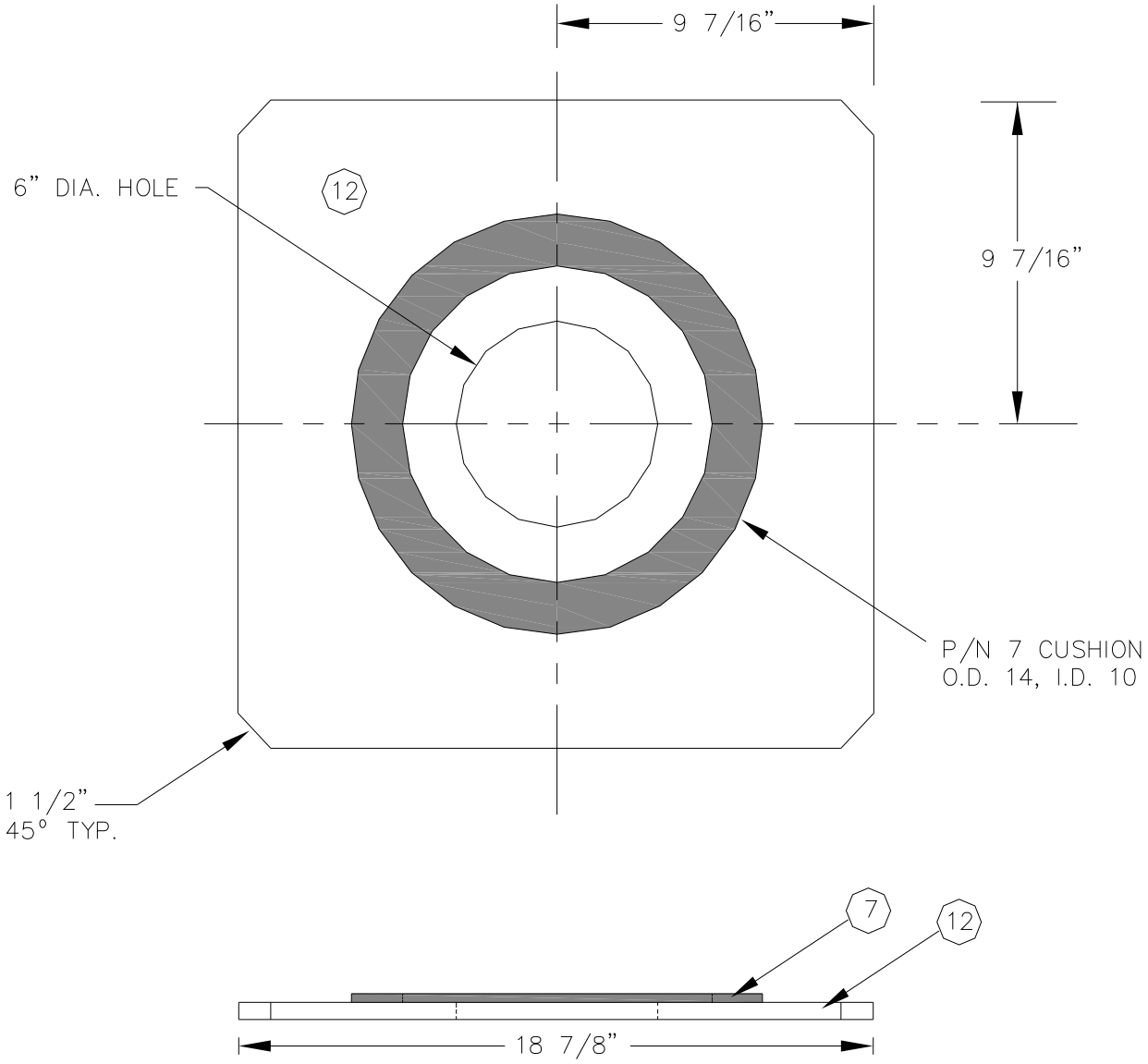

SPECIAL PACKAGING INSTRUCTION	CODE ID 98748	SPI NO (TPO) F 00-065-3579
ITEM NOMENCLATURE ROTOR, COMPRESSOR		SHEET 5 OF 6

DETAIL "C"

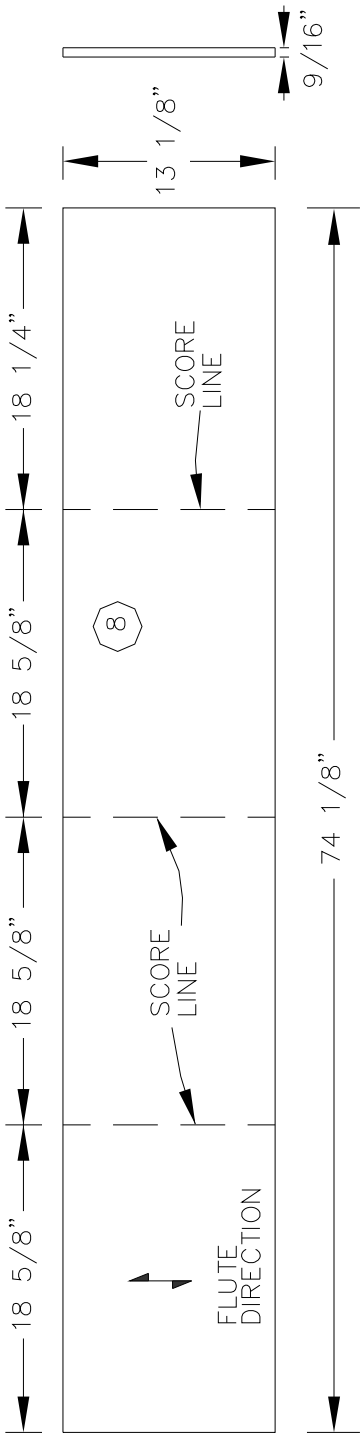

SPECIAL PACKAGING INSTRUCTION	CODE ID 98748	SPI NO (TPO) F 00-065-3579
ITEM NOMENCLATURE ROTOR, COMPRESSOR		SHEET 6 OF 6

DETAIL "D"

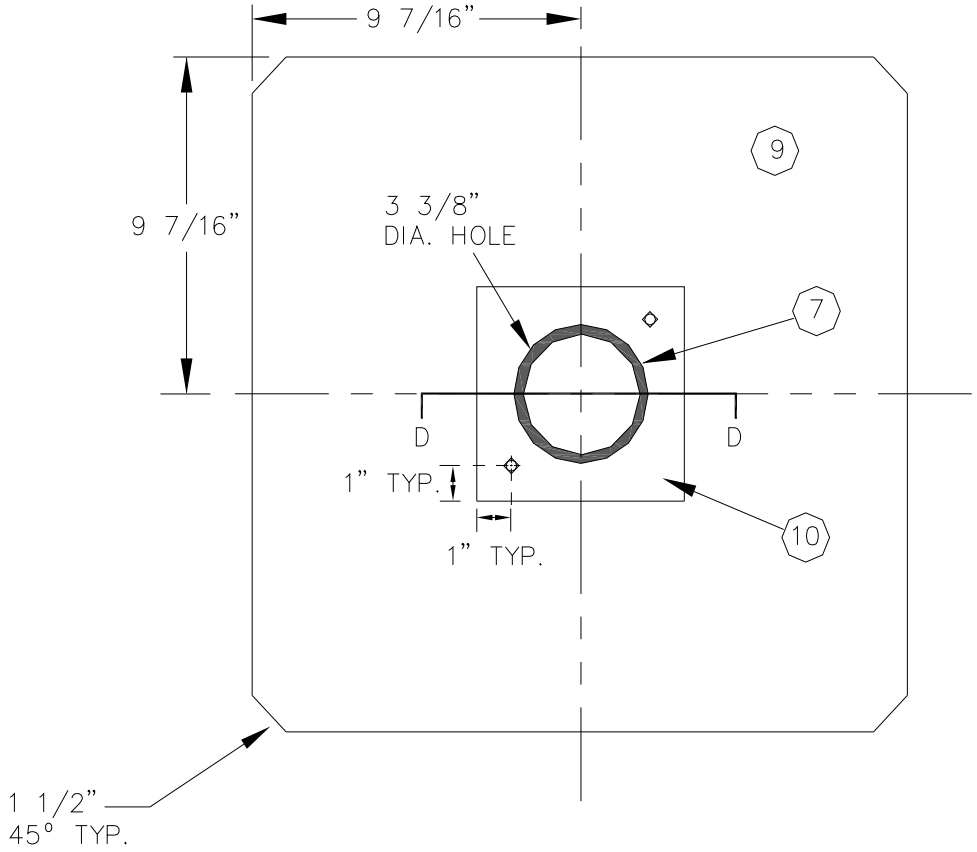

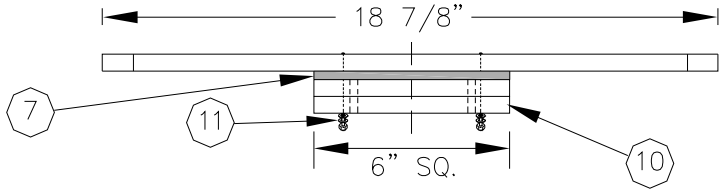
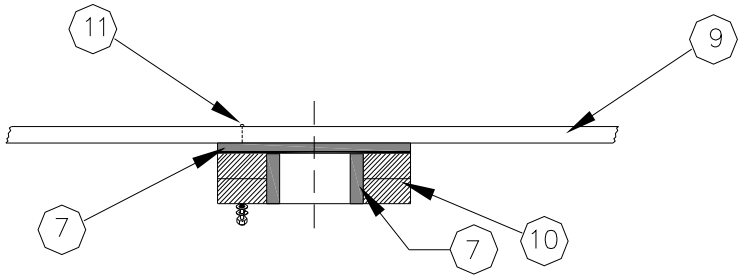
VIEW "DD"